SET NO.

TOWN OF CLAYPOOL
KOSCIUSKO COUNTY, INDIANA

CONTRACT C - STORM SEWER IMPROVEMENTS
DECEMBER 2024

TOWN COUNCIL

BEN STAGE, JR.	**PRESIDENT**
DON MILLER	**MEMBER**
EUGENE WARNER	**MEMBER**
PAT WARNER	**CLERK-TREASURER**
RAMA SOBHANI	**ATTORNEY**

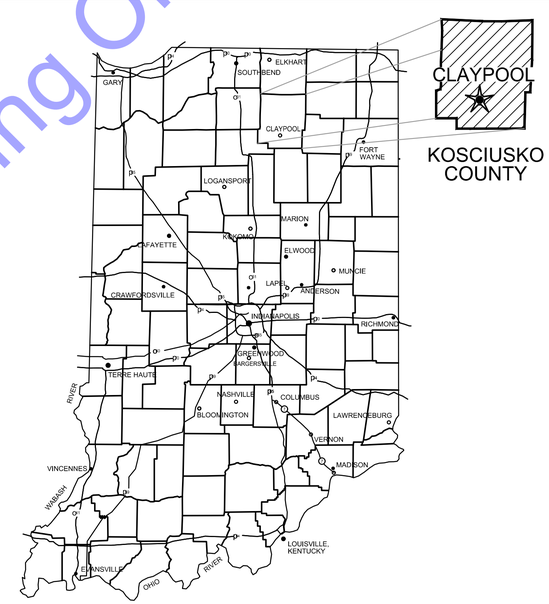

GENERAL LOCATION MAP

COMMONWEALTH™ ENGINEERS, INC.
A wealth of resources to master a common goal.

QA/QC BY : BENJAMIN H. ADAMS 12/31/2024
DATE :

CERTIFIED BY : Natalie Schelling 12/31/2024
NATALIE M. SCHELLING
INDIANA PE No. 12000721
DATE :

NATALIE M. SCHELLING REGISTERED No. 12000721 STATE OF INDIANA PROFESSIONAL ENGINEER

CONTRACT NO. : 23130

VICINITY MAP
SCALE: 1"=500'-0"

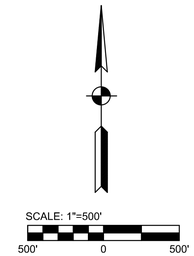

INDEX TO SHEETS

SHEET #	DRAWING #	DESCRIPTION
1	G1	TITLE SHEET
2	G2	VICINITY MAP AND INDEX TO SHEETS
3	G3	LEGENDS, GENERAL NOTES, ABBREVIATIONS AND UTILITY CONTACTS AND NOTES
4	G4	GENERAL LOCATION PLAN & SHEET LOCATION
5	G5	CONTROL PLAN & SCHEDULE
6	G6	STRUCTURE TABLE
7	PP1	PLAN & PROFILE - LINE 'A' - STATION 0+00-4+50
8	PP2	PLAN & PROFILE - LINE 'B' - STATION 0+00-3+42
9	PP3	PLAN & PROFILE - LINE 'C' - STATION 0+00-3+04
10	PP4	PLAN & PROFILE - LINE 'D' - STATION 0+00-5+10, LINE 'D-1' - STATION 0+00-0+55
11	PP5	PLAN & PROFILE - LINE 'F' - STATION 0+00-1+25
12	PP6	PLAN & PROFILE - LINE 'E' - STATION 0+00-3+55
13	SS1	STRUCTURE DETAILS
14	SS2	STRUCTURE DETAILS
15	SS3	STRUCTURE DETAILS
16	MD1	MISCELLANEOUS DETAILS
17	MD2	MISCELLANEOUS DETAILS
18	EC1	EROSION CONTROL
19	EC2	EROSION CONTROL
20	EC3	EROSION CONTROL
21	EC4	EROSION CONTROL DETAILS

COMMONWEALTH ENGINEERS, INC.
A wealth of resources to master a common goal.
https://commonwealthengineers.com/
OFFICE LOCATIONS IN:
INDIANAPOLIS, IN. (2)
EVANSVILLE, IN.
FORT WAYNE, IN.
CROWN POINT, IN.
BOWLING GREEN, KY.
SOUTH BEND, IN.

NATALIE M. SCHELLING
REGISTERED
No. 12000721
STATE OF INDIANA
PROFESSIONAL ENGINEER
Signature 12/31/2024 Date

TOWN OF CLAYPOOL
KOSCIUSKO COUNTY, INDIANA

CONTRACT C -
STORM SEWER
IMPROVEMENTS

Indiana 811
Know what's below. Call before you dig.
Know what's below. 811 before you dig.
1-800-382-5544
(ITS THE LAW)

No.	Submittal / Revision	By	Date

Designed By:	Drawn By:	Checked By:
BW	CH	NS
Issue Date: 12/2024	Project No: S23130	Scale: AS SHOWN

VICINITY MAP AND INDEX TO SHEETS

Drawing No:
G2

File: Z:\SHARED\IN CLIENTS A-L\CLAYPOOL\S23130 - WASTEWATER - STORMWATER IMPROVEMENTS\06 CAD\A CURRENT FILES\1 DRAWINGS\CONTRACT C\02-CLAYPOOL- VICINITY MAP-INDEX-LEGEND.DWG
Saved: 4/7/2025 4:23:17 PM Plotted: 4/8/2025 3:43:20 PM Current User: Craig Higbie LastSavedBy: chigbie

GENERAL ABBREVIATIONS

A	AIR
AB	ANCHOR BOLT
AFF	ABOVE FINISH FLOOR
ALT	ALTERNATE
ALUM	ALUMINUM
@	AT
APP.	APPARENT
ATT	AERATION TANK TRANSFER
AUTO	AUTOMATIC
AVG	AVERAGE
B	BAFFLE
BLDG	BUILDING
BM	BENCH MARK
BOT	BOTTOM
BRG	BEARING
CFM	CUBIC FEET PER MINUTE
CL	CENTERLINE
CO	CLEAN OUT
COL/C	COLUMN
CONC	CONCRETE
COP	COPPER
CJ	CONSTRUCTION JOINT
CW	COLD WATER
CY	CUBIC YARD
D	DRAIN
DEC	DECANT
DIA	DIAMETER
DIM	DIMENSION
DI	DUCTILE IRON PIPE
DL	DEAD LOAD
DSPT	DOWN SPOUT
DWG	DRAWING
E	ELECTRICAL CONDUIT
EA	EACH
EF	EACH FACE
EFFL	EFFLUENT
EL	ELEVATION
EW	EACH WAY
EX	EXISTING
EXF	EXHAUST FAN
EXP JP	EXPANSION JOINT
F	FILTER
FCAR	FLANGED COUPLING ADAPTER, RESTRAINED
FD	FLOOR DRAIN
FDN	FOUNDATION
FH	FIRE HYDRANT
FLD	FILTRATE DRAIN
FLG	FLANGE
FL	FLUSHING LINE
FLR	FLOOR
FM	FORCE MAIN
FRP	FIBER REINFORCED PLASTIC
FT	FEET OR FOOT
FTG	FOOTING
FW	FINISHED WATER
G	GAS
GALV	GALVANIZED
GEN	GENERAL
GRD	GROUND OR GRADE
HB	HOSE BIBB
HORIZ	HORIZONTAL
HP	HORSEPOWER
HW	HOT WATER
ID	INSIDE DIAMETER
IJ	ISOLATION JOINT
INV	INVERT
IP	IRON PIN
LAV	LAVATORY
LB	POUND
LL	LIVE LOAD
LLV	LONG LEG VERTICAL
LTG	LIGHTING
MAX	MAXIMUM
MCC	MOTOR CONTROL CENTER
MGD	MILLIONS GALLONS PER DAY
MH	MANHOLE
MIN	MINIMUM, MINUTE
MJ	MECHANICAL JOINT
NC	NORMALLY CLOSED
NG	NATURAL GAS
NIC	NOT IN CONTACT
NO	NORMALLY OPEN
NO.	NUMBER
NPW	NON-POTABLE WATER
OC	ON CENTER
OD	OUTSIDE DIAMETER
OPG	OPENING
OPP	OPPOSITE
PB	PULL BOX
PE	POLYETHYLENE EXP. JT. MATERIAL
P/L	PROPERTY LINE
POJ	PUSH ON JOINT
PSF	POUNDS PER SQUARE FOOT
PSI	POUNDS PER SQUARE INCH
PVC	POLYVINYL CHLORIDE
PW	POTABLE WATER
R	RECIRULCATION
RAD	RADIUS
RAS	RETURN ACTIVATED SLUDGE
RCP	REINFORCED CONCRETE PIPE
RD	ROOF DRAIN
REINF	REINFORCING
REQ'D	REQUIRED
R/W (ROW)	RIGHT-OF-WAY
SAN	SANITARY
SAS	SANITARY SEWER
SCH	SCHEDULE
SECT	SECTION
SF	SQUARE FEET
SHT	SHEET
SL	SAMPLE LINE
SOS	STORM SEWER
SP	STOP PLATE
SQ	SQUARE
STD	STANDARD
S STL, SS	STAINLESS STEEL
STL	STEEL
SUP	SUPERNATANT
SY	SQUARE YARD
TOS	TOP OF SLAB
TOW	TOP OF WALL
TW	TERTIARY WATER
TYP	TYPICAL
V	VACUUM OR VALVE
VAR	VARIES
VERT	VERTICAL
W	WEIR
W/	WITH
W/O	WITHOUT
WAS	WASTE ACTIVATED SLUDGE
WC	WATER CLOSET
WH	WATER HEATER
WL	WATER LINE
WWF	WELDED WIRE FABRIC
YH	YARD HYDRANT

UTILITY CONTACT INFORMATION

UTILITY PROVIDER	UTILITY TYPE	CONTACT	PHONE	ADDRESS
TOWN OF CLAYPOOL	SEWER	DANNY WARNER	(574) 566-2322	utilities@townofclaypool.com PO BOX 6 CLAYPOOL, IN 46510
AT&T - TRANSMISSION	FIBER OPTIC	VANESSA ROSS	(217) 381-4284	Vf2021@att.com 555 E. COOK STREET SPRINGFIELD, IL 62703
FRONTIER	TELEPHONE		(260) 459-7759	4027 BECKWITH DR FORT WAYNE, IN 46808
IN AMERICAN WATER	WATER	RYAN MOORE	(317) 885-2404	inutilitycoordination@amwater.com
IN FIBER NETWORK DBA INTELLIGENT FIBER NETWORK	FIBER OPTIC	WAYLON HIGGINS		zayo.relo.indiana@zayo.com 722 N. HIGH SCHOOL ROAD INDIANAPOLIS, IN 46214
KOSCIUSKO R.E.M.C., FIBER	FIBER OPTIC			
NIPSCO GAS & ELECTRIC (GOSHEN)	ELECTRIC, GAS	UTILITY COORDINATION		utilitycoordination@nisource.com
	ELECTRIC, GAS	DAMAGE PREVENTION SCREENING CENTER		cdcdamagepreventioncenter@nisource.com
WARSAW COMMUNITY SCHOOLS	FIBER OPTIC	TERRY ENGLE	(574) 371-5098 x2412	tengle@warsawschools.org PO BOX 288 WARSAW, IN 46580

GENERAL NOTES

1. IF ANY ERRORS OR DISCREPANCIES BECOME APPARENT, THEY SHALL BE BROUGHT TO THE ATTENTION OF THE ENGINEER PRIOR TO CONSTRUCTION SO THAT CLARIFICATION OR REDESIGN MAY OCCUR.
2. LIMITS OF CONSTRUCTION SHALL BE WITHIN EXISTING RIGHT-OF-WAYS UNLESS OTHERWISE NOTED.
3. FOR AREAS OUTSIDE OF EXISTING RIGHT-OF-WAYS, THE CONTRACTOR SHALL CONFINE ALL WORK TO THE LIMITS OF PERMANENT AND TEMPORARY EASEMENTS OR CONSTRUCTION LIMIT BOUNDARIES AS SHOWN ON THE DRAWINGS.
4. THE CONTRACTOR SHALL BE RESPONSIBLE FOR SECURING, AT NO ADDITIONAL COST TO THE TOWN, TEMPORARY EASEMENTS NEEDED FOR STORAGE, STOCKPILING, ACCESS, OR ANY OTHER REASON, OUTSIDE OF ANY EASEMENTS OR RIGHT-OF-WAY PROVIDED.
5. THE CONTRACTOR SHALL COORDINATE THE ACTIVITIES OF THEIR PERSONNEL, SUBCONTRACTORS, AND UTILITIES PERFORMING WORK ON THIS PROJECT. THE CONTRACTOR SHALL ALSO COORDINATE WITH THE OWNER'S OPERATIONS AND MAINTENANCE PERSONNEL WHO MAY BE WORKING IN OR NEAR THE PROJECT AREA.
6. THE CONTRACTOR IS SOLELY AND COMPLETELY RESPONSIBLE FOR JOB SITE CONDITIONS DURING THE COURSE OF CONSTRUCTION OF THIS PROJECT, INCLUDING EROSION CONTROL AND THE SAFETY OF ALL PERSONS AND PROPERTY. THIS REQUIREMENT SHALL APPLY CONTINUOUSLY AND NOT BE LIMITED TO NORMAL WORKING HOURS, AND THE CONTRACTOR SHALL DEFEND, INDEMNIFY AND HOLD THE OWNER AND THE ENGINEER HARMLESS FROM ALL LIABILITY, REAL OR ALLEGED, IN CONNECTION WITH THE PERFORMANCE OR WORK ON THE PROJECT.
7. THE CONTRACTOR SHALL BE RESPONSIBLE FOR ALL LINES, GRADES AND ELEVATIONS. ALL PIPES SHALL SLOPE UNIFORMLY BETWEEN INVERT ELEVATIONS SHOWN.
8. IT IS THE RESPONSIBILITY OF THE CONTRACTOR TO REMOVE ALL MUD, DIRT, GRAVEL, AND ANY OTHER MATERIALS TRACKED ONTO ANY PUBLIC OR PRIVATE STREETS, PARKING LOTS, OR WALKS. THIS MATERIAL REMOVAL OR SWEEPING OF THE STREETS SHALL BE DONE AS FREQUENTLY AS NECESSARY TO MAINTAIN REASONABLY CLEAN AREAS. THE CONTRACTOR SHALL ALSO CONTROL DUST THROUGH THE USE OF WATERING, APPLICATION OF DUST PALLIATIVE, OR OTHER APPROVED METHODS. NO DIRECT PAYMENT WILL BE MADE FOR ANY SUCH CLEANING WORK OR DUST CONTROL.
9. EXISTING SIGNS TO BE REMOVED AND RESET AFTER CONSTRUCTION SHALL BE COORDINATED WITH THE TOWN OF CLAYPOOL AND THE KOSCIUSKO COUNTY HIGHWAY DEPARTMENT.
10. THE CONTRACTOR SHALL COMPLY WITH THE REQUIREMENTS OF ALL PERMITS OBTAINED FOR THE PROJECT.
11. THE COST OF ABIDING BY THE PROVISIONS OR PERMITS ISSUED BY VARIOUS AGENCIES SHALL BE CONSIDERED INCIDENTAL TO THE CONTRACT. ALL ASSOCIATED BONDING REQUIREMENTS AND COSTS SHALL ALSO BE CONSIDERED INCIDENTAL TO THE CONTRACT.
12. THE CONTRACTOR SHALL PRESERVE AND PROTECT PROPERTY MARKERS, SECTION CORNERS, SURVEY MARKS AND BENCHMARKS, SUCH AS STONES, PIPES, OR OTHER MONUMENTS ENCOUNTERED. IF THE CONTRACTOR MUST DISTURB THE PROPERTY MARKERS OR MONUMENTS, THEIR HORIZONTAL AND VERTICAL LOCATION SHALL BE DETERMINED AND RECORDED BY A REGISTERED LAND SURVEYOR AND THE OWNER NOTIFIED BEFORE DISTURBING. ALL PROPERTY MARKERS AND MONUMENTS DISTURBED DURING CONSTRUCTION SHALL BE RE-ESTABLISHED BY A REGISTERED LAND SURVEYOR TO FINAL COMPLETION.
13. ROADWAY SURFACING AND BASE MATERIALS OR OTHER PROPERTY REMOVED OR DAMAGED, SHALL BE REPLACED OR REPAIRED AS PROVIDED FOR IN THE CONTRACT DOCUMENTS.
14. REGRADE AREAS AS NECESSARY WITHIN THE CONSTRUCTION LIMITS TO ALLOW PROPER DRAINAGE TO EXISTING STORM SEWER STRUCTURES. ANY EXCESS SOIL AND SPOIL MATERIAL SHALL BE DISPOSED OF BY THE CONTRACTOR OFF-SITE.
15. WORK NOT SPECIFIED FOR PAYMENT AS OR PART OF A SPECIFIC PAY ITEM SHALL BE CONSIDERED INCIDENTAL TO THE CONTRACT BY THE CONTRACTOR.
16. COORDINATION AND PROPER FIT AND SURVEY OF ALL PROJECT ELEMENTS ARE THE RESPONSIBILITY OF THE CONTRACTOR. CONTRACTOR SHALL CONDUCT A PRE-CONSTRUCTION STAKEOUT OF THE PROJECT ELEMENTS TO VERIFY THE COORDINATES PROVIDED.
17. THE CONTRACTOR SHALL VERIFY ALL RIM ELEVATIONS OF PROPOSED STRUCTURES PRIOR TO ORDERING ANY MATERIALS.
18. ADDITIONAL ACCESS ROAD OUTSIDE OF WHAT IS SHOWN ON DRAWINGS, SHALL BE INCIDENTAL TO OTHER PAY ITEMS.
19. ALL NORTHINGS AND EASTINGS PROVIDED FOR NEW STRUCTURES ARE DESIGNATED TO THE CENTER OF THE STRUCTURE.

EXISTING UTILITY NOTES

1. THE EXISTING UTILITY INFORMATION SHOWN ON THESE DRAWINGS CONCERNING TYPE AND LOCATION OF UNDERGROUND UTILITIES IS NOT GUARANTEED TO BE ACCURATE OR ALL-INCLUSIVE. LOCATION, SIZE AND MATERIAL SHOWN ON UTILITIES ARE FROM AVAILABLE RECORDS AND AVAILABLE FIELD MARKINGS, SUPPLIED BY THE RESPECTIVE UTILITY COMPANY. THE INDIANA UNDERGROUND PLANT PROTECTION SERVICE (IUPPS) MUST BE NOTIFIED 48 HOURS PRIOR TO ANY EXCAVATION FOR VERIFICATION OF LOCATION, SIZE AND MATERIAL FOR EXISTING UNDERGROUND UTILITIES (1-800-382-5544).
2. SIZE, MATERIAL, DEPTH AND LOCATION OF KNOWN EXISTING SEWER FACILITIES ARE FROM AVAILABLE HISTORIC INFORMATION AND ABOVE-GROUND INSPECTION AND MEASUREMENT. THE CONTRACTOR SHALL VERIFY ALL SEWER INFORMATION CONTAINED IN THE CONTRACT DOCUMENTS PRIOR TO ANY CONSTRUCTION WHICH WOULD BE IMPACTED BY FACILITIES NOT LOCATED AS SHOWN IN THE CONTRACT DOCUMENTS. THE COST TO CORRECT ANY FACILITIES INSTALLED PRIOR TO VERIFICATION OF EXISTING CONDITIONS BY THE CONTRACTOR SHALL BE AT NO COST TO THE OWNER OR ENGINEER. DIFFERING CONDITIONS DISCOVERED DURING VERIFICATION WILL BE HANDLED PER THE CONTRACT DOCUMENTS.
3. THE LOCATIONS OF UTILITIES AND STRUCTURES, BOTH SURFACE AND SUBSURFACE, ARE SHOWN ON THE PLANS FROM DATA AVAILABLE AT THE TIME OF SURVEY AND ARE NOT NECESSARILY COMPLETE OR CORRECT. DETERMINING THE EXACT LOCATION AND PROTECTING UTILITIES AND STRUCTURES ARE THE RESPONSIBILITY OF THE CONTRACTOR. DURING CONSTRUCTION, THE CONTRACTOR SHALL PROTECT ALL EXISTING UTILITIES AND STRUCTURES WHETHER SHOWN ON THE PLANS OR NOT. IF DAMAGE IS CAUSED, THE CONTRACTOR SHALL BE RESPONSIBLE FOR THE REPAIR AND RESTORATION OF SAME IN ACCORDANCE WITH THE REQUIREMENTS OF THE UTILITY OWNER AND FOR ANY RESULTING CONTINGENT DAMAGE AND COST.
4. IF UTILITY FACILITIES OTHER THAN THOSE SHOWN ARE LOCATED, OR IF UTILITIES ARE LOCATED WHICH ARE NOT IN ACCORDANCE WITH THE LOCATIONS SHOWN ON THE DRAWINGS, THE ENGINEER SHALL BE NOTIFIED TO DETERMINE IF PLAN REVISIONS ARE NEEDED.
5. ALL EXISTING UTILITIES SHOWN IN PROFILE ARE INDICATED AT THEIR ASSUMED ELEVATION. CONTRACTOR TO FIELD VERIFY PRIOR TO CONSTRUCTION.
6. IN GENERAL, UTILITY SERVICE LINES TO INDIVIDUAL CUSTOMERS ARE NOT SHOWN ON THE PLANS. CONTRACTOR SHALL ASSUME THAT UNDERGROUND SERVICE LINES EXIST TO EACH PROPERTY ALONG THE NEW SEWER ROUTE FOR WATER, SANITARY SEWER, GAS, ELECTRIC, TELEPHONE, AND FIBER OPTIC. THE CONTRACTOR SHALL LOCATE, PROTECT, AND IF DAMAGED BY CONTRACTOR, REPAIR ALL UTILITY SERVICE LINES ENCOUNTERED.
7. IT SHALL BE THE CONTRACTOR'S RESPONSIBILITY TO MAINTAIN IN SERVICE ALL EXISTING UTILITIES ENCOUNTERED DURING CONSTRUCTION UNLESS OTHERWISE INDICATED IN THE DRAWINGS. ANY UTILITY WHICH CAN BE REMOVED DURING CONSTRUCTION WITHOUT UNDUE INTERRUPTION OF SERVICE MAY BE REMOVED AND REPLACED BY THE CONTRACTOR WITH THE PERMISSION OF THE OWNER AND THE APPLICABLE UTILITY OWNER.
8. THE CONTRACTOR SHALL BE RESPONSIBLE FOR REPAIR/REPLACEMENT TO ALL DAMAGED WATER SERVICES. CONTRACTOR MUST NOTIFY WATER MAINTENANCE AND SERVICE DISPATCHER OF ANY DAMAGES TO THE WATER FACILITIES. DAMAGED WATER FACILITIES MUST BE REPAIRED BY THE CONTRACTOR WITHIN TWO (2) HOURS AT NO ADDITIONAL COST TO THE OWNER. IF WATER MAINTENANCE IS REQUIRED TO MAKE REPAIRS, THE CONTRACTOR WILL BE BILLED. WATER MAIN REPLACEMENT SHALL BE COORDINATED WITH HIGHLAND WATER DEPARTMENT AND SHALL BE COMPLETED IN CONFORMANCE TO THE CONTRACT DOCUMENTS.
9. THE CONTRACTOR SHALL PROTECT ALL POWER POLES FROM DAMAGE ASSOCIATED WITH CONSTRUCTION ACTIVITIES. WHERE REQUIRED, ALL UTILITY POLES ARE TO BE SUPPORTED IN A MANNER APPROVED BY THE APPROPRIATE UTILITY DURING INSTALLATION OF SEWER PIPE. ALL COSTS ASSOCIATED WITH MAINTAINING SAID FLOWS SHALL BE THE RESPONSIBILITY OF THE CONTRACTOR. ALL COSTS ASSOCIATED WITH THE PROTECTION AND/OR TEMPORARY SUPPORT OF UTILITY POLES SHALL BE THE RESPONSIBILITY OF THE CONTRACTOR.
10. THE CONTRACTOR SHALL MAKE PROVISIONS TO MAINTAIN FLOWS IN ALL SANITARY SEWERS, AND OVERFLOWS ARE PROHIBITED. BYPASS PUMPING OR ALTERNATE PROVISIONS MAY BE REQUIRED AND SHALL BE SUFFICIENT TO CONVEY FLOWS UNDER ALL CONDITIONS. ALL COSTS ASSOCIATED WITH MAINTAINING SAID FLOWS SHALL BE THE RESPONSIBILITY OF THE CONTRACTOR.

LEGEND

NEW TEMPORARY EASEMENT (PLAN ONLY)
NEW PERMANENT EASMENT (PLAN ONLY)
GRANULAR BACKFILL (PROFILES AND SECTIONS ONLY)
ASPHALT (PROFILES AND SECTIONS ONLY)
ABANDONED IN PLACE (PLAN ONLY)
STONE DRIVE (PLAN) GROUT (PROFILES AND SECTIONS)
CONCRETE
DROP SHAFT LOCATION (PLAN ONLY)

NEW STORM MANHOLE
NEW STORM SEWER
NEW STORM INLET
EXISTING SANITARY MANHOLE
EXISTING SANITARY SEWER
EXSN — EXISTING SANITARY SEWER
EXISTING STORM SEWER TO BE PLUGGED
EXBT — EXISTING STORM SEWER TO BE ABANDONED/FILLED
EXISTING STORM SEWER TO BE REMOVED
EXFM — EXISTING FORCE MAIN
EXISTING STORM STRUCTURE
EXISTING STORM SEWER
EXST — EXISTING STORM SEWER
EXW — EXISTING WATERLINE
EXISTING FIRE HYDRANT
EXISTING WATER VALVE
EXISTING WATER SPIGOT

EXISTING GAS METER
EXFO — EXISTING FIBER OPTICS
EXISTING FIBER OPTICS BOX
EXISTING ELECTRIC BOX
EXISTING MAILBOX
EXISTING SIGN
EXISTING POST
X — X — EXISTING FENCE
EXISTING GUARDRAIL
EXISTING DECIDUOUS TREE
EXISTING EVERGREEN TREE
EXISTING SHRUB/BUSH
EXISTING TREE LINE
890 — EXISTING MAJOR CONTOUR LINE
EXISTING MINOR CONTOUR LINE
R/W — APPROX. RIGHT-OF-WAY
PL — APPROX. PROPERTY LINE

EXISTING WATER METER
EXG — EXISTING GAS LINE
EXISTING GAS VALVE
EXISTING LIGHT POLE
EXISTING POWER POLEW/ GUY WIRE
EXOHE — EXISTING OVERHEAD ELECTRIC
EXBT — EXISTING BURIED TELEPHONE
EXISTING TELEPHONE CONTROL BOX
EDGE OF DRIVE
X 866.8 EXISTING SPOT ELEVATION
CONTROL POINT
TEMPORARY BENCH MARK
WATER EDGE
EXISTING BIG ROCK
CONSTRUCTION LIMITS/TRENCH LIMITS

COMMONWEALTH ENGINEERS, INC.
A wealth of resources to render a common goal.
https://commonwealthengineers.com/
OFFICE LOCATIONS IN:
INDIANAPOLIS, IN. (2)
EVANSVILLE, IN.
FORT WAYNE, IN.
CROWN POINT, IN.
BOWLING GREEN, KY.
SOUTH BEND, IN.

NATALIE M. SCHELLING REGISTERED No. 12000721 STATE OF INDIANA PROFESSIONAL ENGINEER

Signature — Date 12/31/2024

TOWN OF CLAYPOOL
KOSCIUSKO COUNTY, INDIANA

CONTRACT C - STORM SEWER IMPROVEMENTS

Know what's below. Call before you dig.
Know what's below. 811 before you dig.
1-800-382-5544 (ITS THE LAW)

No.	Submittal / Revision	By	Date

Designed By:	Drawn By:	Checked By:
BW	CH	NS
Issue Date: 12/2024	Project No: S23130	Scale: AS SHOWN

LEGENDS, GENERAL NOTES, ABBREVIATIONS AND UTILITY CONTACTS AND NOTES

Drawing No: G3

Sheet: 3 OF 21

File: Z:\SHARED\IN CLIENTS A-L\CLAYPOOL\S23130 - WASTEWATER - STORMWATER IMPROVEMENTS\06 CAD\A CURRENT FILES\1 DRAWINGS\CONTRACT C\02-CLAYPOOL- VICINITY MAP-INDEX-LEGEND.DWG
Saved: 4/7/2025 4:23:17 PM Plotted: 4/8/2025 3:43:21 PM Current User: Craig Higbie LastSavedBy: chigbie

File: Z:\SHARED\IN CLIENTS A-L\CLAYPOOL\S23130 - WASTEWATER IMPROVEMENTS\06 CAD\A CURRENT FILES\1 DRAWINGS\CONTRACT C\03-CLAYPOOL- GENERAL LOCATION PLAN.DWG
Saved: 4/8/2025 2:33:15 PM Plotted: 4/8/2025 3:43:44 PM Current User: Craig Higbie LastSavedBy: chigbie

COMMONWEALTH ENGINEERS, INC.
A wealth of resources to master a common goal.
https://commonwealthengineers.com/
OFFICE LOCATIONS IN:
INDIANAPOLIS, IN. (2)
EVANSVILLE, IN.
FORT WAYNE, IN.
CROWN POINT, IN.
BOWLING GREEN, KY.
SOUTH BEND, IN.

NATALIE M. SCHELLING
REGISTERED
No. 12000721
STATE OF INDIANA
PROFESSIONAL ENGINEER

Signature 12/31/2024 Date

TOWN OF CLAYPOOL
KOSCIUSKO COUNTY, INDIANA

CONTRACT C - STORM SEWER IMPROVEMENTS

Indiana 811 Know what's below. Call before you dig.
Know what's below. 811 before you dig.
1-800-382-5544 (ITS THE LAW)

No.	Submittal / Revision	By	Date

Designed By:	Drawn By:	Checked By:
BW	CH	NS
Issue Date: 12/2024	Project No: S23130	Scale: AS SHOWN

GENERAL LOCATION PLAN & SHEET LOCATION

Drawing No: G4

Sheet: 4 OF 21

CONTROL
SCALE: 1"=100'-0"

CONTROL SCHEDULE

POINT #	NORTHING	EASTING	ELEVATION	DESCRIPTION
7790	2144342.05	268776.14	874.48	TBM * NE BB IN FH CHISSLED X
9510	2143746.21	268785.64	871.75	CP * DN

COMMONWEALTH ENGINEERS, INC.
A wealth of resources to master a common goal.
https://commonwealthengineers.com/
OFFICE LOCATIONS IN:
INDIANAPOLIS, IN. (2)
EVANSVILLE, IN.
FORT WAYNE, IN.
CROWN POINT, IN.
BOWLING GREEN, KY.
SOUTH BEND, IN.

NATALIE M. SCHELLING
REGISTERED No. 12000721 STATE OF INDIANA PROFESSIONAL ENGINEER

Signature 12/31/2024 Date

TOWN OF CLAYPOOL
KOSCIUSKO COUNTY, INDIANA

CONTRACT C -
STORM SEWER
IMPROVEMENTS

Indiana811 Know what's below. Call before you dig.
Know what's below. 811 before you dig.
1-800-382-5544
(ITS THE LAW)

No.	Submittal / Revision	By	Date

Designed By:	Drawn By:	Checked By:
BW	CH	NS
Issue Date: 12/2024	Project No: S23130	Scale: AS SHOWN

CONTROL PLAN & SCHEDULE

Drawing No:
G5

Sheet: 5 OF 21

File: Z:\SHARED\IN CLIENTS A-L\CLAYPOOL\S23130 - WASTEWATER - STORMWATER IMPROVEMENTS\06 CAD\A CURRENT FILES\1 DRAWINGS\CONTRACT C\03-CLAYPOOL- GENERAL LOCATION PLAN.DWG
Saved: 4/8/2025 2:33:15 PM Plotted: 4/8/2025 3:43:45 PM Current User: Craig Higbie LastSavedBy: chigbie

STRUCTURE TABLE

STRUCTURE NAME:	RIM:	STRUCTURE SIZE:	CASTING TYPE:	PIPES IN:	PIPES OUT:
101	894.4±	48" DOGHOUSE MANHOLE CONTRACTOR TO FIELD VERIFY LOCATION AND DEPTH OF EXISTING CONNECTION. ADD NEW STR. #101 AND RECONNECT ALL EXISTING STORM PIPES.	R-1772	15" INV: 882.50 W (IN)	CONTRACTOR TO VERIFY
102	889.5±	48" MANHOLE	R-1772	15" INV: 883.05 N (IN)	15" INV: 882.95 E (OUT)
103	887.1±	48" MANHOLE CONTRACTOR TO FIELD VERIFY LOCATION AND DEPTH OF EXISTING CONNECTION. ADD NEW STR. #103 AND RECONNECT ALL EXISTING STORM PIPES.	R-2502 TYPE C	12" INV: 883.40 N (IN)	15" INV: 883.15 S (OUT)
104	887.2±	33" MANHOLE	R-2502 TYPE C	12" INV: 883.59 N (IN)	12" INV: 883.49 S (OUT)
105	887.8±	30" MANHOLE	R-2502 TYPE C		12" INV: 883.71 S (OUT)
106	886.0±	48" MANHOLE CONTRACTOR TO FIELD VERIFY LOCATION AND DEPTH OF EXISTING CONNECTION. ADD NEW STR. #106 AND RECONNECT ALL EXISTING STORM PIPES.	R-1772	12" INV: 881.50 NW (IN) 12" INV: 881.50 S (IN) 12" INV: 879.29 W (IN)	12" INV: 878.84 SE (OUT)
107	885.7±	48" MANHOLE	R-1772	12" INV: 880.09 W (IN) 12" INV: 882.00 SW (IN) 12" INV: 882.00 NW (IN)	12" INV: 879.99 E (OUT)
108	886.6±	48" MANHOLE	R-1772	12" INV: 880.49 W (IN) 12" INV: 882.00 NE (IN) 12" INV: 882.00 S (IN)	12" INV: 880.39 E (OUT)
109	885.3±	33" MANHOLE CONTRACTOR TO REPLACE EX. ROUND INLET WITH NEW STR. #109	R-2502 TYPE C	12" INV: 881.37 S (IN)	12" INV: 880.67 E (OUT)
110	886.1±	33" MANHOLE	R-2502 TYPE C		12" INV: 881.45 N (OUT)
111	886.4±	33" MANHOLE	R-2502 TYPE C		12" INV: 882.20 SW (OUT)
112	886.2±	33" MANHOLE	R-2502 TYPE C		12" INV: 882.20 N (OUT)
113	885.2±	33" MANHOLE	R-2502 TYPE C		12" INV: 882.10 SE (OUT)
114	885.7±	33" MANHOLE	R-2502 TYPE C		12" INV: 882.10 NE (OUT)
115	885.8±	33" MANHOLE	R-2502 TYPE C		12" INV: 881.60 SE (OUT)
116	885.7±	33" MANHOLE	R-2502 TYPE C		12" INV: 881.60 N (OUT)
118	879.4±	48" MANHOLE	R-1772	12" INV: 875.00 W (IN) 12" INV: 872.36 S (IN)	12" INV: 872.26 N (OUT)
119	880.6±	48" MANHOLE	R-2502 TYPE C	12" INV: 876.29 W (IN)	12" INV: 872.62 N (OUT)
120	879.6±	33" MANHOLE	R-2502 TYPE C		12" INV: 875.13 E (OUT)
121	877.0±	33" MANHOLE	R-2502 TYPE C		12" INV: 871.61 N (OUT)
122	873.4±	48" MANHOLE	R-2502 TYPE C	15" INV: 868.09 W (IN)	15" INV: 867.99 E (OUT)
123	874.8±	48" MANHOLE	R-2502 TYPE C	12" INV: 869.25 N (IN) 12" INV: 871.81 W (IN)	15" INV: 869.00 E (OUT)
124	876.8±	48" MANHOLE	R-2502 TYPE C	12" INV: 870.09 W (IN)	12" INV: 869.99 S (OUT)
125	874.6±	33" MANHOLE	R-2502 TYPE C	12" INV: 870.51 W (IN)	12" INV: 870.41 E (OUT)
126	878.5±	48" MANHOLE	R-2502 TYPE C		12" INV: 870.94 E (OUT)
127	875.1±	33" MANHOLE	R-2502 TYPE C	12" INV: 871.99 S (IN)	12" INV: 871.89 E (OUT)
128	873.8±	96" DOGHOUSE MANHOLE CONTRACTOR TO FIELD VERIFY LOCATION AND DEPTH OF EXISTING CONNECTION. ADD NEW STR. #128 AND RECONNECT ALL EXISTING STORM PIPES.	R-1772	12" INV: 868.60 W (IN) 12" INV: 869.88 NW (IN) 48" INV: 863.85 S (IN)	48" INV: 863.85 N (OUT)
129	873.5±	48" MANHOLE	R-2502 TYPE C	12" INV: 869.07 W (IN) 12" INV: 871.50 SW (IN) 12" INV: 871.50 NW (IN)	12" INV: 868.97 E (OUT)

STRUCTURE TABLE

STRUCTURE NAME:	RIM:	STRUCTURE SIZE:	CASTING TYPE:	PIPES IN:	PIPES OUT:
130	873.9±	48" MANHOLE	R-2502 TYPE C		12" INV: 869.32 E (OUT)
131	873.6±	33" MANHOLE	R-2502 TYPE C		12" INV: 871.60 SE (OUT)
132	873.7±	33" MANHOLE	R-2502 TYPE C		12" INV: 871.60 NE (OUT)
133	884.7±	48" MANHOLE CONTRACTOR TO FIELD VERIFY LOCATION AND DEPTH OF EXISTING CONNECTION. ADD NEW STR. #133 AND RECONNECT ALL EXISTING STORM PIPES.	R-1772	12" INV: 878.30 E (IN) 12" INV: 874.50 W (IN)	12" INV: 874.50 S (OUT)
134	884.4±	48" MANHOLE	R-1772	12" INV: 880.26 E (IN) 12" INV: 880.39 S (IN) 12" INV: 880.43 N (IN)	12" INV: 878.66 W (OUT)
135	885.0±	48" MANHOLE	R-1772	12" INV: 880.96 NW (IN) 12" INV: 880.96 S (IN) 12" INV: 880.86 E (IN)	12" INV: 880.76 W (OUT)
136	885.3±	48" MANHOLE	R-1772		12" INV: 881.66 W (OUT)
137	884.9±	33" MANHOLE	R-2502 TYPE C		12" INV: 880.78 S (OUT)
138	884.4±	33" MANHOLE	R-2502 TYPE C		12" INV: 880.48 N (OUT)
139	884.9±	33" MANHOLE	R-2502 TYPE C		12" INV: 881.01 SE (OUT)
140	885.2±	33" MANHOLE	R-2502 TYPE C		12" INV: 881.02 N (OUT)
141	875.5±	33 MANHOLE	R-2502 TYPE C		12" INV: 872.19 N (OUT)
142	885.3±	33" MANHOLE CONTRACTOR TO REPLACE EX. ROUND INLET WITH NEW STRUCTURE #142 AND RECCONECT EX. PIPE	R-2502 TYPE C		8" INV: 878.79 N (OUT)
143	879.8±	33" MANHOLE CONTRACTOR TO REMOVE EX. INLET #2 AND REPLACE WITH NEW STR. #143 AND RECONNECT EX. STORM	R-2502 TYPE C	6" INV: 877.25 S (IN)	8" INV: 876.30 N (OUT) 12" INV: 876.50 E (OUT)
144	872.5±	33" MANHOLE CONTRACTOR TO REMOVE EX. INLET #6 AND REPLACE WITH NEW STR. #144 AND CONNECT TO NEW STR. 128 W/ 12" INLET CONNECTION PIPE AND PLUG EX. 12" STORM TO N	R-2502 TYPE C	12" INV: 869.97 N (IN)	12" INV: 869.97 SE (OUT)
EX. INLET #1	879.9±		ROUND INLET	6" INV: 877.55 W (IN)	6" INV: 877.50 N (OUT)
EX. INLET #2	879.8±		BEEHIVE INLET	6" INV: 877.25 S (IN)	8" INV: 876.30 N (OUT)
EX. INLET #3	876.2±	CONTRACTOR TO CONNECT PROP. INLET TO EX. STORM MANHOLE #6.	ROUND INLET	48" INV: 864.18 W (IN) 12" INV: 871.11 S (IN)	48" INV: 864.13 NE (OUT)
EX. INLET #4	883.5±		BEEHIVE INLET	6" INV: 882.11 E (IN)	8" INV: 880.61 S (OUT)
EX. INLET #5	883.4±		BEEHIVE INLET	8" INV: 879.18 N (IN) 6" INV: 882.13 NE (IN)	8" INV: 879.18 S (OUT)
EX. INLET #6	873.8±		ROUND INLET	12" INV: 869.97 N (IN)	
EX. STR. #7	876.0±		MANHOLE	12" INV: 870.16 S (IN) 48" INV: 864.81 SW (IN) 12" INV: 872.11 SW (IN)	48" INV: 864.76 N (OUT)
EX. STR. #10	873.8±	CONTRACTOR TO CONNECT TO EX. STR. #10	MANHOLE	15" INV: 867.84 W (IN) 48" INV: 863.28 S (IN) 12" INV: 866.28 E (IN)	48" INV: 863.28 N (OUT)
EX. STR. #11	884.7±		MANHOLE		10" INV: 874.83 N (OUT) 12" INV: 874.50 E (OUT)
EX. STR. #12	886.0±		MANHOLE	8" INV: 878.79 S (IN) 10" INV: 878.84 N (IN) 12" INV: 878.84 NW (IN) 12" INV: 878.84 NW (IN)	12" INV: 879.29 SE (OUT)

COMMONWEALTH ENGINEERS, INC.
A wealth of resources to realize a common goal.
https://commonwealthengineers.com/
OFFICE LOCATIONS IN:
INDIANAPOLIS, IN. (2)
EVANSVILLE, IN.
FORT WAYNE, IN.
CROWN POINT, IN.
BOWLING GREEN, KY.
SOUTH BEND, IN.

NATALIE M. SCHELLING
REGISTERED No. 12000721 STATE OF INDIANA PROFESSIONAL ENGINEER
Signature 12/31/2024 Date

TOWN OF CLAYPOOL
KOSCIUSKO COUNTY, INDIANA

CONTRACT C -
STORM SEWER
IMPROVEMENTS

Indiana 811 Know what's below. Call before you dig.
Know what's below. 811 before you dig.
1-800-382-5544
(ITS THE LAW)

No.	Submittal / Revision	By	Date

Designed By:	Drawn By:	Checked By:
BW	CH	NS
Issue Date: 12/2024	Project No: S23130	Scale: AS SHOWN

STRUCTURE TABLE

Drawing No: G6

File: Z:\SHARED\IN CLIENTS A-L\CLAYPOOL\S23130 - WASTEWATER - STORMWATER IMPROVEMENTS\06 CAD\A CURRENT FILES\1 DRAWINGS\CONTRACT C\03-CLAYPOOL- GENERAL LOCATION PLAN.DWG
Saved: 4/8/2025 2:33:15 PM Plotted: 4/8/2025 3:43:46 PM Current User: Craig Higbie LastSavedBy: chigbie

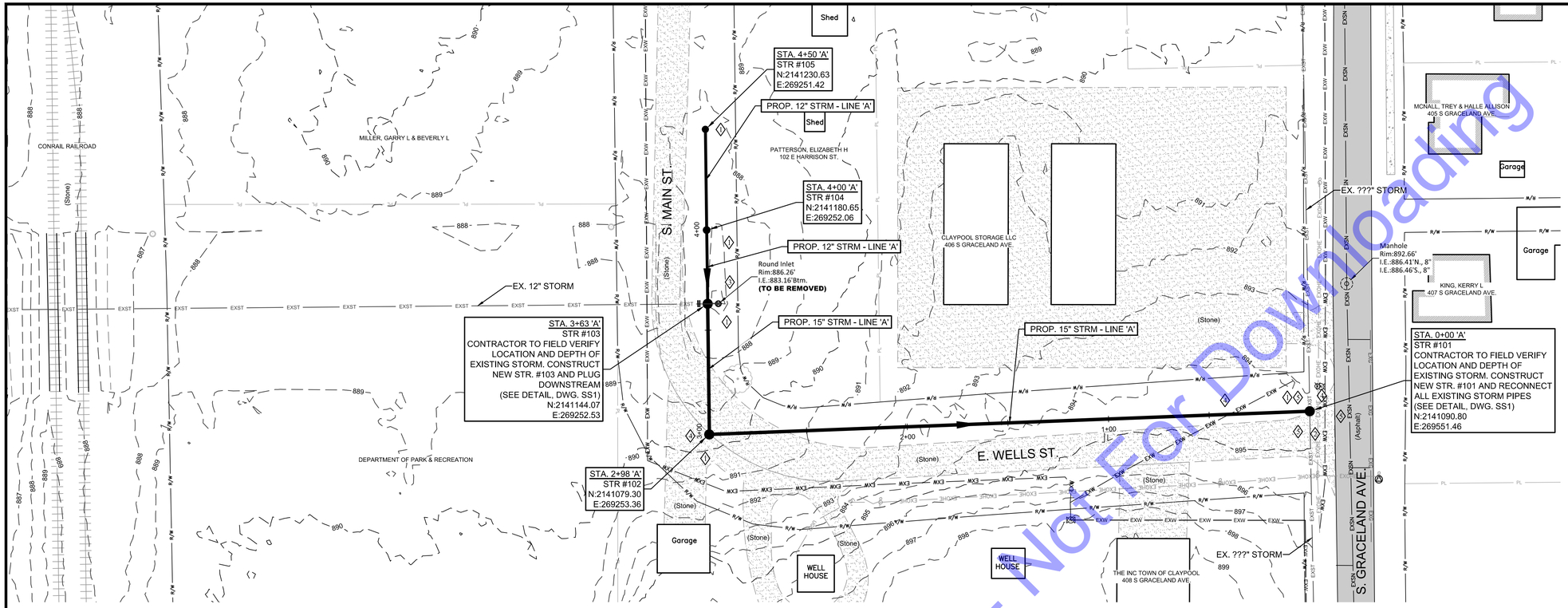

PLAN VIEW

SCALE: 1"=30'-0"

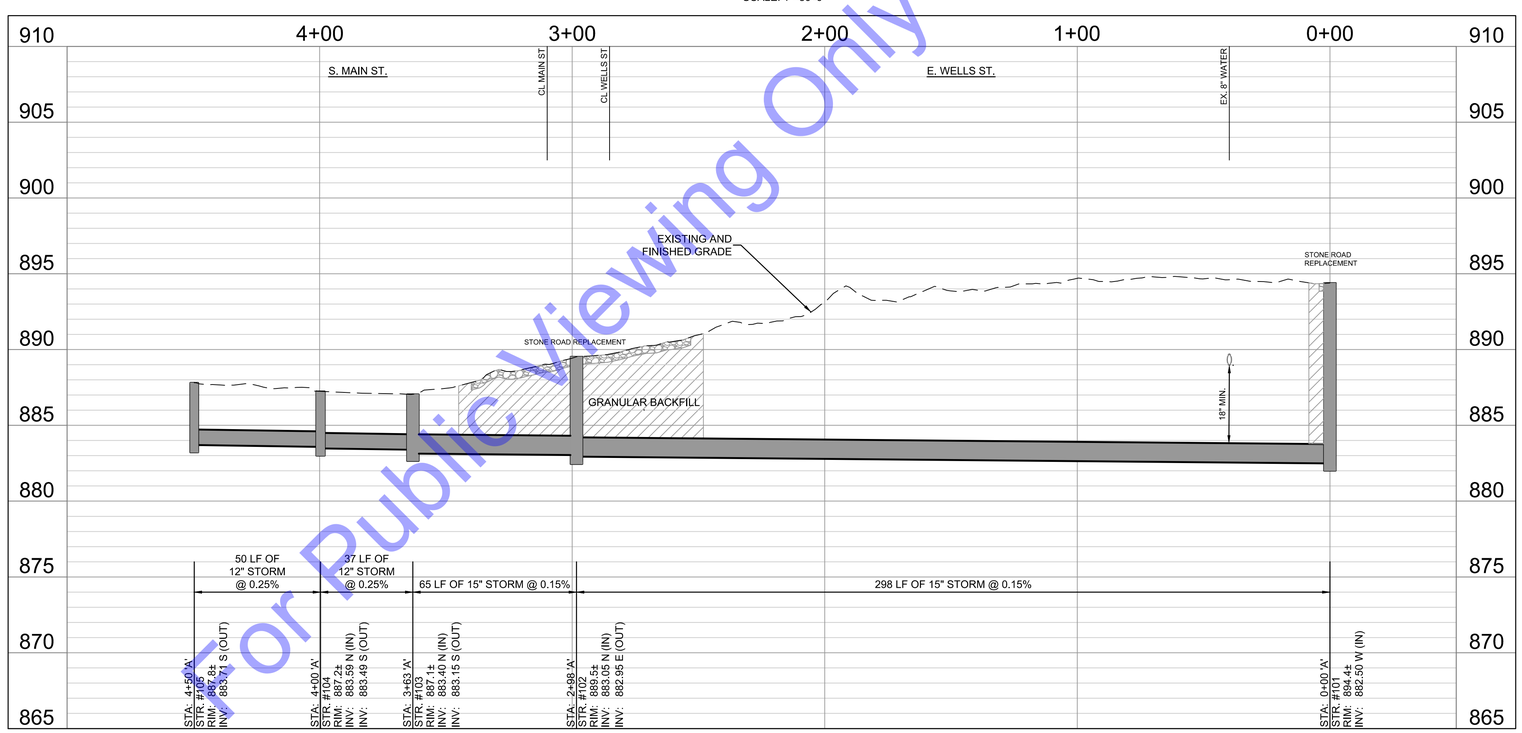

PROFILE - LINE 'A'

HORIZONTAL SCALE: 1"=30'-0"
VERTICAL SCALE: 1"=5'-0"

CODED NOTES

1. SEE EC DRAWINGS FOR EROSION CONTROL MEASURES.
2. CONTRACTOR TO VERIFY EX. UTILITY LOCATIONS PRIOR TO ANY CONSTRUCTION. IN THE EVENT OF UTILITY CONFLICTS, CONTRACTOR SHALL NOTIFY UTILITY TO RELOCATE TO AVOID CONFLICTS.
3. CONTRACTOR TO PROTECT ANY EXISTING STORM SEWER AND STRUCTURES AND/OR FIELD TILE ENCOUNTERED DURING CONSTRUCTION. IF ENCOUNTERED AND DISTURBED, CONTRACTOR TO REPLACE TO A CONDITION EQUAL TO OR BETTER.
4. EARLY ACTION ITEM: CONTRACTOR TO FIELD VERIFY LOCATION AND DEPTH OF EXISTING WATER MAIN PRIOR TO CONSTRUCTION ON LINE 'A'. MAINTAIN MINIMUM REQUIRED SEPARATION DURING INSTALLATION OF LINE 'A'.
5. EARLY ACTION ITEM: CONTRACTOR TO FIELD VERIFY LOCATION, SIZE AND DEPTH OF EXISTING STORM SEWER PRIOR TO CONSTRUCTION ON LINE 'A'. IF EXISTING STORM INVERT IS TOO SHALLOW, NOTIFY ENGINEER PRIOR TO CONSTRUCTION. ALTERNATE ROUTE FOR LINE 'A' TO BE RE-ROUTED TO THE WEST FROM NEW STRUCTURE #103 WITH ENGINEER APPROVAL.

NOTE:
THE EXISTING AND PROPOSED PROFILE GRADES ARE BASED ON THE ELEVATIONS AT THE CENTERLINE OF THE PROPOSED STORM SEWER.

COMMONWEALTH ENGINEERS, INC.
A wealth of resources to master a common goal.
https://commonwealthengineers.com/
OFFICE LOCATIONS IN:
INDIANAPOLIS, IN. (2)
EVANSVILLE, IN.
FORT WAYNE, IN.
CROWN POINT, IN.
BOWLING GREEN, KY.
SOUTH BEND, IN.

NATALIE M. SCHELLING
REGISTERED No. 12000721 STATE OF INDIANA
PROFESSIONAL ENGINEER

Signature 12/31/2024 Date

TOWN OF CLAYPOOL
KOSCIUSKO COUNTY, INDIANA

CONTRACT C -
STORM SEWER
IMPROVEMENTS

Indiana 811
Know what's below. Call before you dig.
Know what's below. 811 before you dig.
1-800-382-5544 (ITS THE LAW)

No.	Submittal / Revision	By	Date

Designed By:	Drawn By:	Checked By:
BW	CH	NS
Issue Date: 12/2024	Project No: S23130	Scale: AS SHOWN

PLAN & PROFILE - LINE 'A' - STATION 0+00-4+50

Drawing No: PP1

Sheet: 7 OF 21

File: Z:\SHARED\IN CLIENTS A-L\CLAYPOOL\S23130 - WASTEWATER - STORMWATER IMPROVEMENTS\06 CAD\A CURRENT FILES\1 DRAWINGS\CONTRACT C\04- CLAYPOOL - PLAN AND PROFILES.DWG
Saved: 4/8/2025 3:41:16 PM Plotted: 4/8/2025 3:43:57 PM Current User: Craig Higbie LastSavedBy: chigbie

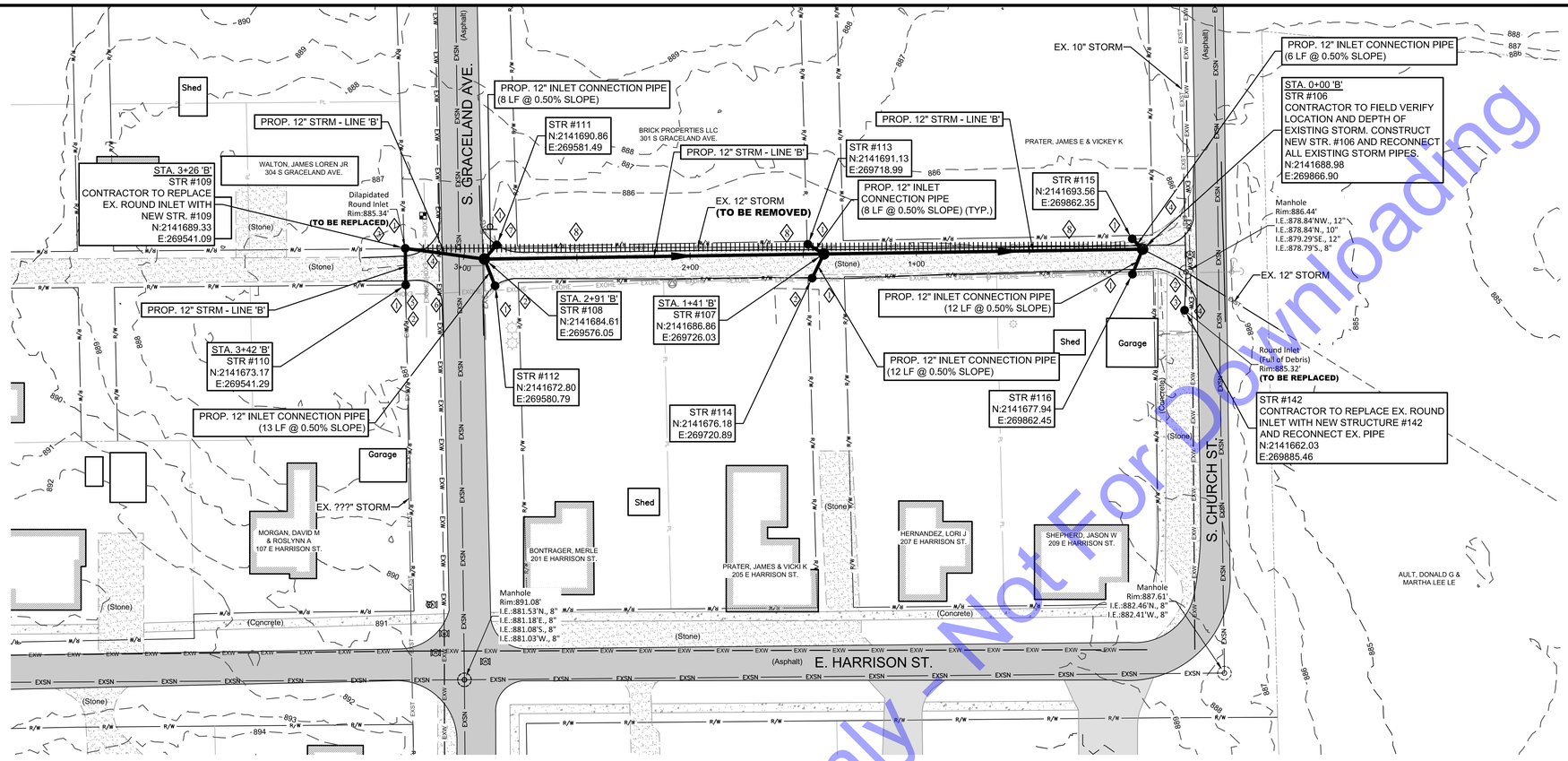

PLAN VIEW

SCALE: 1"=30'-0"

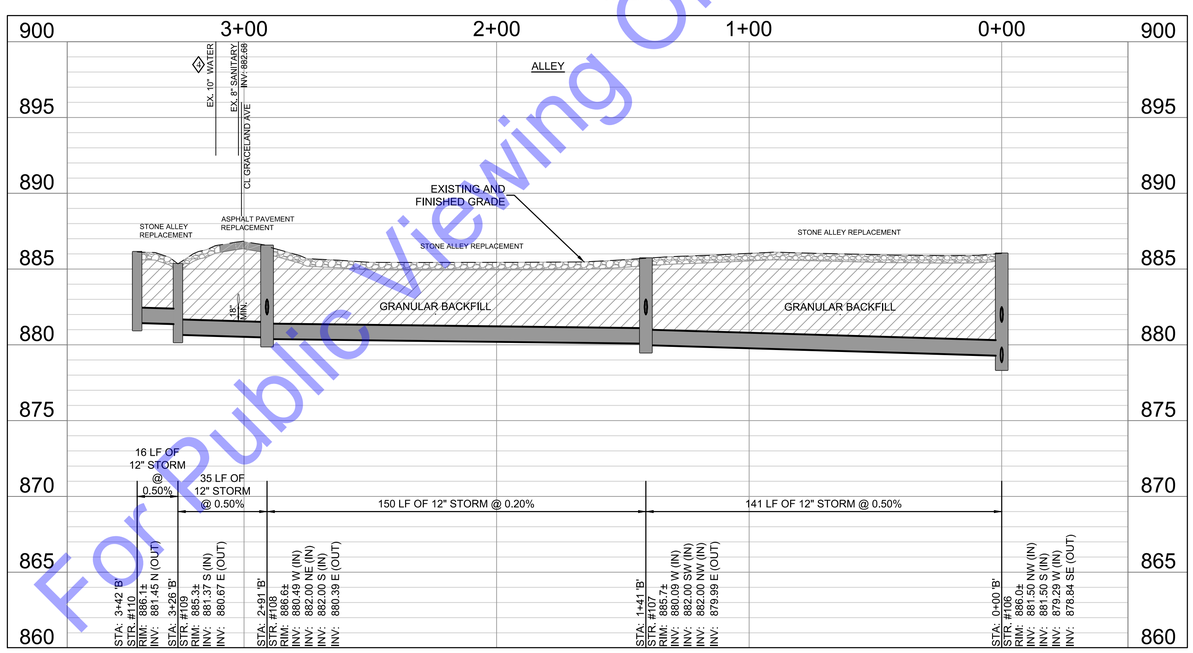

PROFILE - LINE 'B'

HORIZONTAL SCALE: 1"=30'-0"
VERTICAL SCALE: 1"=5'-0"

SCALE: 1"=30'
30' 0 30'

CODED NOTES

1. SEE EC DRAWINGS FOR EROSION CONTROL MEASURES.
2. CONTRACTOR TO VERIFY EX. UTILITY LOCATIONS PRIOR TO ANY CONSTRUCTION. IN THE EVENT OF UTILITY CONFLICTS, CONTRACTOR SHALL NOTIFY UTILITY TO RELOCATE TO AVOID CONFLICTS.
3. CONTRACTOR TO PROTECT ANY EXISTING STORM SEWER AND STRUCTURES AND/OR FIELD TILE ENCOUNTERED DURING CONSTRUCTION. IF ENCOUNTERED AND DISTURBED, CONTRACTOR TO REPLACE TO A CONDITION EQUAL TO OR BETTER.
4. EARLY ACTION ITEM: CONTRACTOR TO FIELD VERIFY LOCATION AND DEPTH OF EXISTING WATER MAIN PRIOR TO CONSTRUCTION ON LINE 'B'. MAINTAIN MINIMUM REQUIRED SEPARATION DURING INSTALLATION OF LINE 'B'.
5. EARLY ACTION ITEM: CONTRACTOR TO FIELD VERIFY LOCATION, SIZE AND DEPTH OF EXISTING STORM SEWER PRIOR TO CONSTRUCTION ON LINE 'B'.
6. CONTRACTOR TO PROTECT/SUPPORT UTILITY POLES DURING CONSTRUCTION.
7. DAMAGE TO SIGNS TO BE CONTRACTOR RESPONSIBILITY. REMOVAL AND REPLACEMENT OF SIGNS TO BE CONSIDERED INCIDENTAL TO PROJECT.
8. CONTRACTOR TO REMOVE EX. 12" STORM DURING THE CONSTRUCTION OF LINE 'B' AND DISPOSE OF LAWFULLY.

NOTE:
THE EXISTING AND PROPOSED PROFILE GRADES ARE BASED ON THE ELEVATIONS AT THE CENTERLINE OF THE PROPOSED STORM SEWER.

COMMONWEALTH ENGINEERS, INC.
A wealth of resources to master a common goal.
https://commonwealthengineers.com/
OFFICE LOCATIONS IN:
INDIANAPOLIS, IN. (2)
EVANSVILLE, IN.
FORT WAYNE, IN.
CROWN POINT, IN.
BOWLING GREEN, KY.
SOUTH BEND, IN.

NATALIE M. SCHELLING REGISTERED No. 12000721 STATE OF INDIANA PROFESSIONAL ENGINEER

Signature 12/31/2024 Date

TOWN OF CLAYPOOL
KOSCIUSKO COUNTY, INDIANA

CONTRACT C - STORM SEWER IMPROVEMENTS

Indiana 811 Know what's below. Call before you dig.
Know what's below. 811 before you dig.
1-800-382-5544 (ITS THE LAW)

No.	Submittal / Revision	By	Date

Designed By:	Drawn By:	Checked By:
BW	CH	NS
Issue Date: 12/2024	Project No: S23130	Scale: AS SHOWN

PLAN & PROFILE - LINE 'B' - STATION 0+00-3+42

Drawing No: PP2

Sheet: 8 OF 21

File: Z:\SHARED\IN CLIENTS A-L\CLAYPOOL\S23130 - WASTEWATER - STORMWATER IMPROVEMENTS\06 CAD\A CURRENT FILES\1 DRAWINGS\CONTRACT C\04- CLAYPOOL - PLAN AND PROFILES.DWG
Saved: 4/16/2025 3:46:12 PM Plotted: 4/16/2025 3:47:18 PM Current User: Brian Waterman LastSavedBy: bwaterman

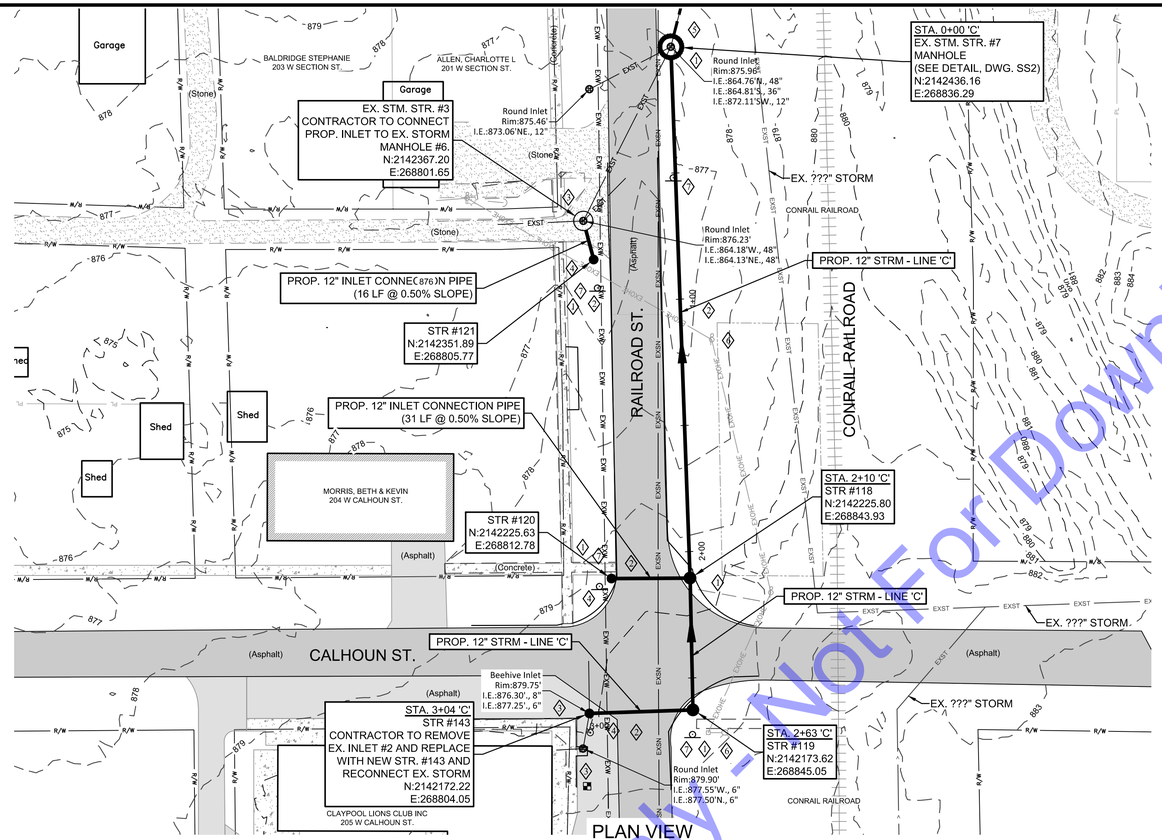

PLAN VIEW

SCALE: 1"=30'-0"

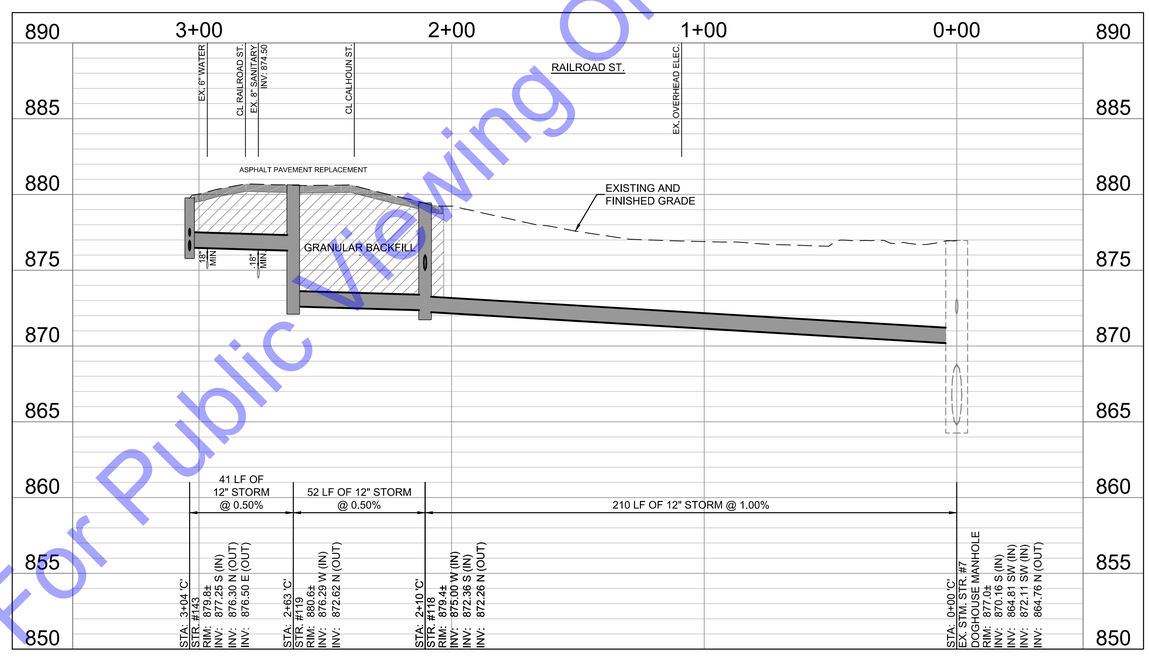

PROFILE - LINE 'C'

HORIZONTAL SCALE: 1"=30'-0"
VERTICAL SCALE: 1"=5'-0"

SCALE: 1"=30'

30' 0 30'

CODED NOTES

1. SEE EC DRAWINGS FOR EROSION CONTROL MEASURES.
2. CONTRACTOR TO VERIFY EX. UTILITY LOCATIONS PRIOR TO ANY CONSTRUCTION. IN THE EVENT OF UTILITY CONFLICTS, CONTRACTOR SHALL NOTIFY UTILITY TO RELOCATE TO AVOID CONFLICTS.
3. CONTRACTOR TO PROTECT ANY EXISTING STORM SEWER AND STRUCTURES AND/OR FIELD TILE ENCOUNTERED DURING CONSTRUCTION. IF ENCOUNTERED AND DISTURBED, CONTRACTOR TO REPLACE TO A CONDITION EQUAL TO OR BETTER.
4. EARLY ACTION ITEM: CONTRACTOR TO FIELD VERIFY LOCATION AND DEPTH OF EXISTING WATER MAIN PRIOR TO CONSTRUCTION ON LINE 'C'. MAINTAIN MINIMUM REQUIRED SEPARATION DURING INSTALLATION OF LINE 'C'.
5. EARLY ACTION ITEM: CONTRACTOR TO FIELD VERIFY LOCATION, SIZE AND DEPTH OF EXISTING 48" STORM SEWER PRIOR TO CONSTRUCTION ON LINE 'C'.
6. CONTRACTOR TO PROTECT/SUPPORT UTILITY POLES DURING CONSTRUCTION.
7. DAMAGE TO SIGNS TO BE CONTRACTOR RESPONSIBILITY. REMOVAL AND REPLACEMENT OF SIGNS TO BE CONSIDERED INCIDENTAL TO PROJECT.

NOTE:
THE EXISTING AND PROPOSED PROFILE GRADES ARE BASED ON THE ELEVATIONS AT THE CENTERLINE OF THE PROPOSED SANITARY SEWER.

COMMONWEALTH ENGINEERS, INC.
A wealth of resources to master a common goal.
https://commonwealthengineers.com/
OFFICE LOCATIONS IN:
INDIANAPOLIS, IN. (2)
EVANSVILLE, IN.
FORT WAYNE, IN.
CROWN POINT, IN.
BOWLING GREEN, KY.
SOUTH BEND, IN.

NATALIE M. SCHELLING
REGISTERED No. 12000721 STATE OF INDIANA
PROFESSIONAL ENGINEER

Signature 12/31/2024 Date

TOWN OF CLAYPOOL
KOSCIUSKO COUNTY, INDIANA

CONTRACT C -
STORM SEWER
IMPROVEMENTS

Indiana 811 Know what's below. Call before you dig.
Know what's below. 811 before you dig.
1-800-382-5544
(ITS THE LAW)

No.	Submittal / Revision	By	Date

Designed By:	Drawn By:	Checked By:
BW	CH	NS
Issue Date: 12/2024	Project No: S23130	Scale: AS SHOWN

PLAN & PROFILE - LINE 'C' - STATION 0+00-3+04

Drawing No:
PP3

Sheet: 9 OF 21

File: Z:\SHARED\IN CLIENTS A-L\CLAYPOOL\S23130 - WASTEWATER - STORMWATER IMPROVEMENTS\06 CAD\A CURRENT FILES\1 DRAWINGS\CONTRACT C\04- CLAYPOOL - PLAN AND PROFILES.DWG
Saved: 4/8/2025 3:41:16 PM Plotted: 4/8/2025 3:44:10 PM Current User: Craig Higbie LastSavedBy: chigbie

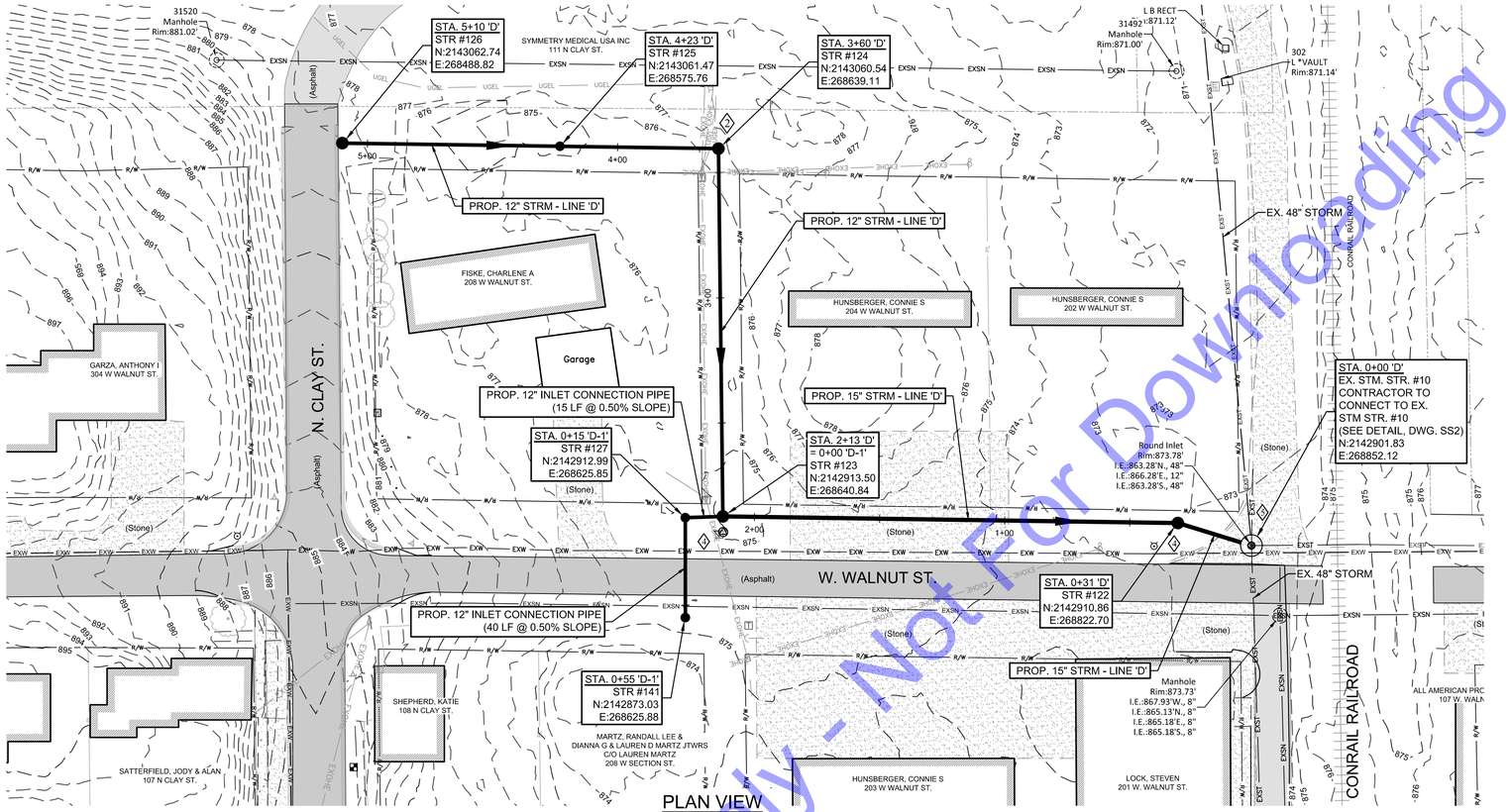

PLAN VIEW

SCALE: 1"=30'-0"

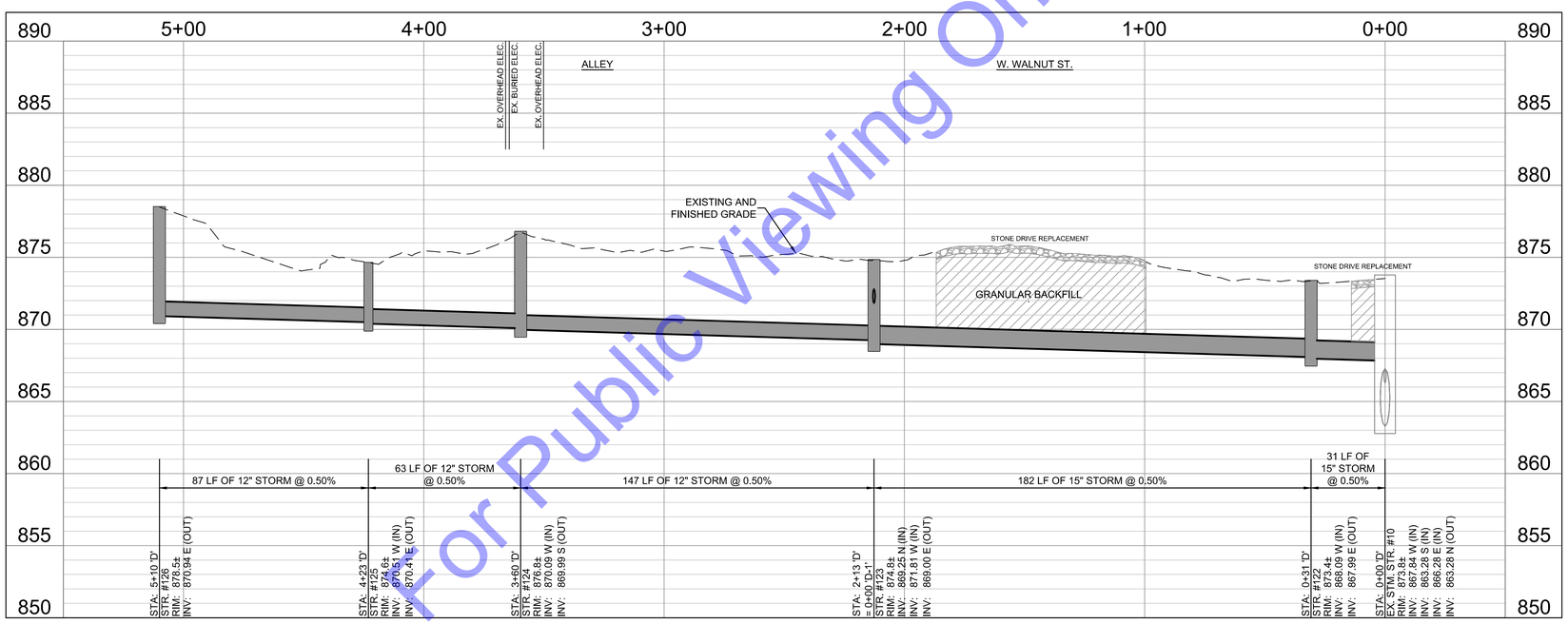

PROFILE - LINE 'D'

HORIZONTAL SCALE: 1"=30'-0"

VERTICAL SCALE: 1"=5'-0"

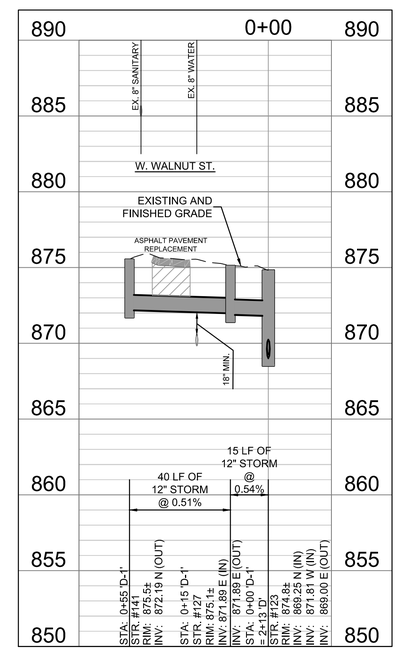

PROFILE - LINE 'D-1'

HORIZONTAL SCALE: 1"=30'-0"

VERTICAL SCALE: 1"=5'-0"

SCALE: 1"=30'

30' 0 30'

CODED NOTES

1. SEE EC DRAWINGS FOR EROSION CONTROL MEASURES.
2. CONTRACTOR TO VERIFY EX. UTILITY LOCATIONS PRIOR TO ANY CONSTRUCTION. IN THE EVENT OF UTILITY CONFLICTS, CONTRACTOR SHALL NOTIFY UTILITY TO RELOCATE TO AVOID CONFLICTS.
3. CONTRACTOR TO PROTECT ANY EXISTING STORM SEWER AND STRUCTURES AND/OR FIELD TILE ENCOUNTERED DURING CONSTRUCTION. IF ENCOUNTERED AND DISTURBED, CONTRACTOR TO REPLACE TO A CONDITION EQUAL TO OR BETTER.
4. EARLY ACTION ITEM: CONTRACTOR TO FIELD VERIFY LOCATION AND DEPTH OF EXISTING WATER MAIN PRIOR TO CONSTRUCTION ON LINE 'D'. MAINTAIN MINIMUM REQUIRED SEPARATION DURING INSTALLATION OF LINE 'D'.
5. EARLY ACTION ITEM: CONTRACTOR TO FIELD VERIFY LOCATION, SIZE AND DEPTH OF EXISTING 48" STORM SEWER PRIOR TO CONSTRUCTION ON LINE 'D'.

NOTE:
THE EXISTING AND PROPOSED PROFILE GRADES ARE BASED ON THE ELEVATIONS AT THE CENTERLINE OF THE PROPOSED SANITARY SEWER.

COMMONWEALTH ENGINEERS, INC.
A wealth of resources to realize a common goal.
https://commonwealthengineers.com/
OFFICE LOCATIONS IN:
INDIANAPOLIS, IN. (2)
EVANSVILLE, IN.
FORT WAYNE, IN.
CROWN POINT, IN.
BOWLING GREEN, KY.
SOUTH BEND, IN.

REGISTERED NATALIE M. SCHELLING No. 12000721 STATE OF INDIANA PROFESSIONAL ENGINEER

Signature 12/31/2024 Date

TOWN OF CLAYPOOL
KOSCIUSKO COUNTY, INDIANA

CONTRACT C -
STORM SEWER
IMPROVEMENTS

Know what's below. Call before you dig.
Know what's below. 811 before you dig.
1-800-382-5544 (ITS THE LAW)

No.	Submittal / Revision	By	Date

Designed By:	Drawn By:	Checked By:
BW	CH	NS
Issue Date:	Project No:	Scale:
12/2024	S23130	AS SHOWN

PLAN & PROFILE - LINE 'D' - STATION 0+00-5+10, LINE 'D-1' - STATION 0+00-0+55

Drawing No:
PP4

Sheet: 10 OF 21

File: Z:\SHARED\IN CLIENTS A-L\CLAYPOOL\S23130 - WASTEWATER - STORMWATER IMPROVEMENTS\06 CAD\A CURRENT FILES\1 DRAWINGS\CONTRACT C\04- CLAYPOOL - PLAN AND PROFILES.DWG
Saved: 4/8/2025 3:41:16 PM Plotted: 4/8/2025 3:44:19 PM Current User: Craig Higbie LastSavedBy: chigbie

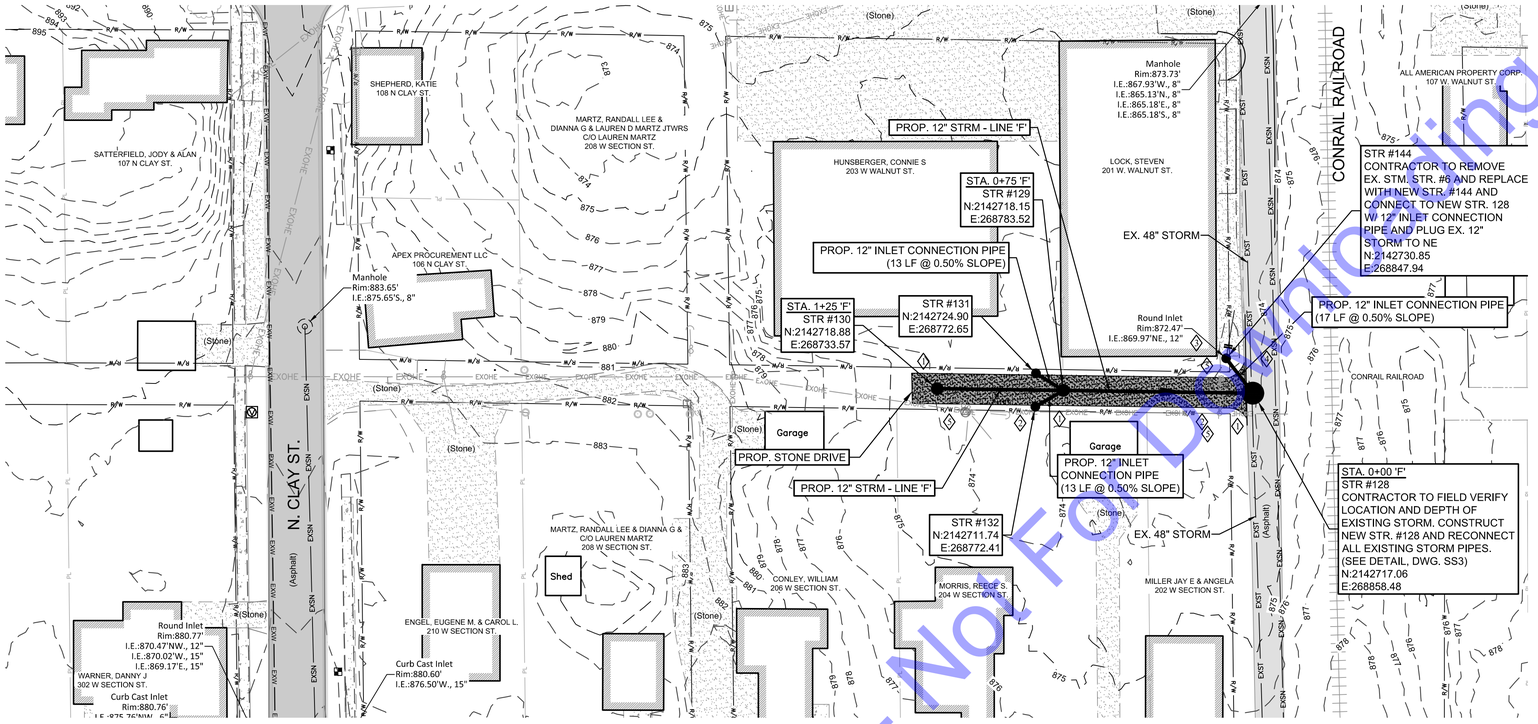

PLAN VIEW

SCALE: 1"=30'-0"

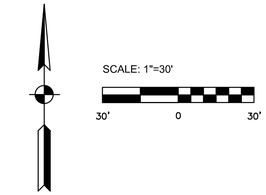

CODED NOTES

1. SEE EC DRAWINGS FOR EROSION CONTROL MEASURES.
2. CONTRACTOR TO VERIFY EX. UTILITY LOCATIONS PRIOR TO ANY CONSTRUCTION. IN THE EVENT OF UTILITY CONFLICTS, CONTRACTOR SHALL NOTIFY UTILITY TO RELOCATE TO AVOID CONFLICTS.
3. CONTRACTOR TO PROTECT ANY EXISTING STORM SEWER AND STRUCTURES AND/OR FIELD TILE ENCOUNTERED DURING CONSTRUCTION. IF ENCOUNTERED AND DISTURBED, CONTRACTOR TO REPLACE TO A CONDITION EQUAL TO OR BETTER.
4. EARLY ACTION ITEM: CONTRACTOR TO FIELD VERIFY LOCATION, SIZE AND DEPTH OF EXISTING 48" STORM SEWER PRIOR TO CONSTRUCTION ON LINE 'F'.
5. CONTRACTOR TO PROTECT/SUPPORT UTILITY POLES DURING CONSTRUCTION.

NOTE:
THE EXISTING AND PROPOSED PROFILE GRADES ARE BASED ON THE ELEVATIONS AT THE CENTERLINE OF THE PROPOSED SANITARY SEWER.

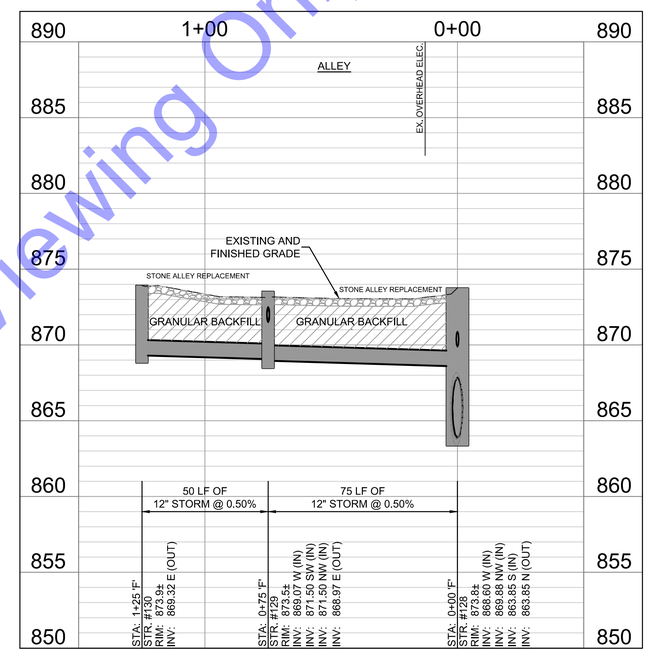

PROFILE - LINE 'F'

HORIZONTAL SCALE: 1"=30'-0"
VERTICAL SCALE: 1"=5'-0"

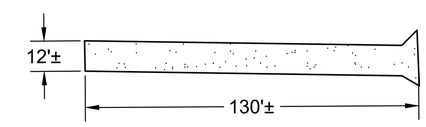

STONE ALLEY PLAN LAYOUT

SCALE: NONE

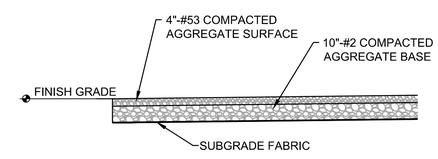

STONE SITE

NO SCALE

COMMONWEALTH ENGINEERS, INC.
A wealth of resources to render a common goal.
https://commonwealthengineers.com/
OFFICE LOCATIONS IN:
INDIANAPOLIS, IN. (2)
EVANSVILLE, IN.
FORT WAYNE, IN.
CROWN POINT, IN.
BOWLING GREEN, KY.
SOUTH BEND, IN.

NATALIE M. SCHELLING
REGISTERED No. 12000721 STATE OF INDIANA
PROFESSIONAL ENGINEER

Signature — Date: 12/31/2024

TOWN OF CLAYPOOL
KOSCIUSKO COUNTY, INDIANA

CONTRACT C -
STORM SEWER
IMPROVEMENTS

Indiana 811 — Know what's below. Call before you dig.
Know what's below. 811 before you dig.
1-800-382-5544
(ITS THE LAW)

No.	Submittal / Revision	By	Date

Designed By:	Drawn By:	Checked By:
BW	CH	NS
Issue Date: 12/2024	Project No: S23130	Scale: AS SHOWN

PLAN & PROFILE - LINE 'F' - STATION 0+00-1+25

Drawing No: PP5

Sheet: 11 OF 21

File: Z:\SHARED\IN CLIENTS A-L\CLAYPOOL\S23130 - WASTEWATER IMPROVEMENTS\06 CAD\A CURRENT FILES\1 DRAWINGS\CONTRACT C\04- CLAYPOOL - PLAN AND PROFILES.DWG
Saved: 4/8/2025 3:41:16 PM Plotted: 4/8/2025 3:44:25 PM Current User: Craig Higbie LastSavedBy: chigbie

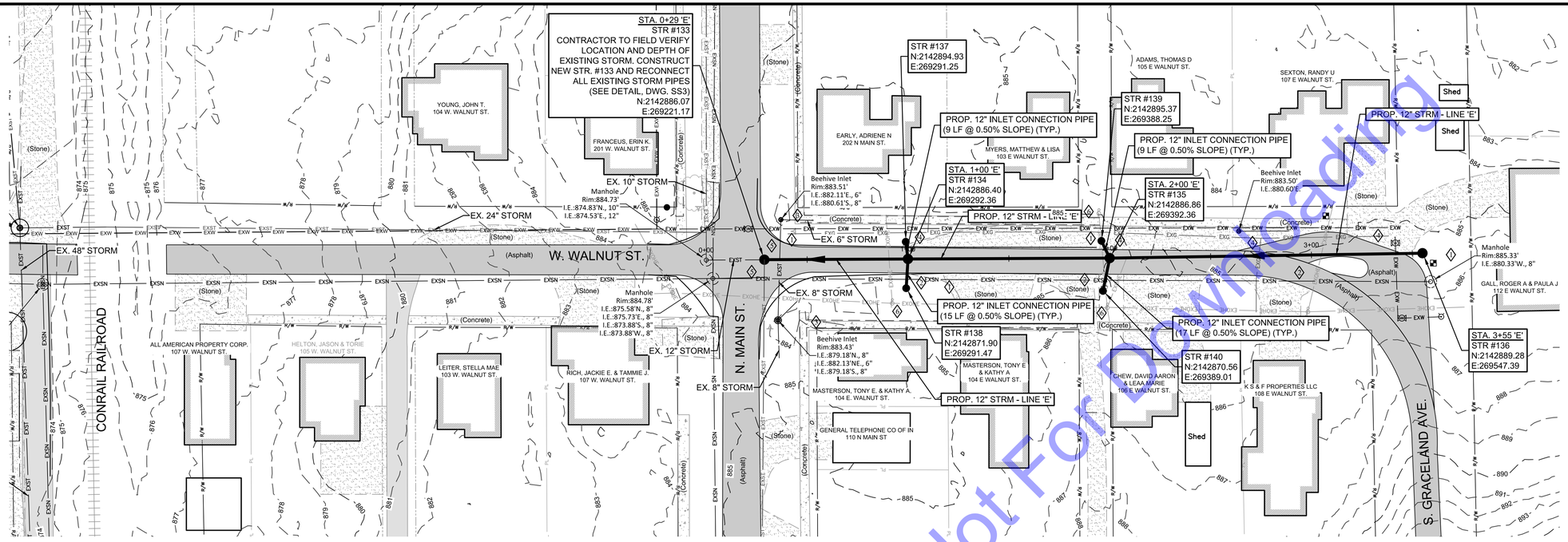

PLAN VIEW

SCALE: 1"=30'-0"

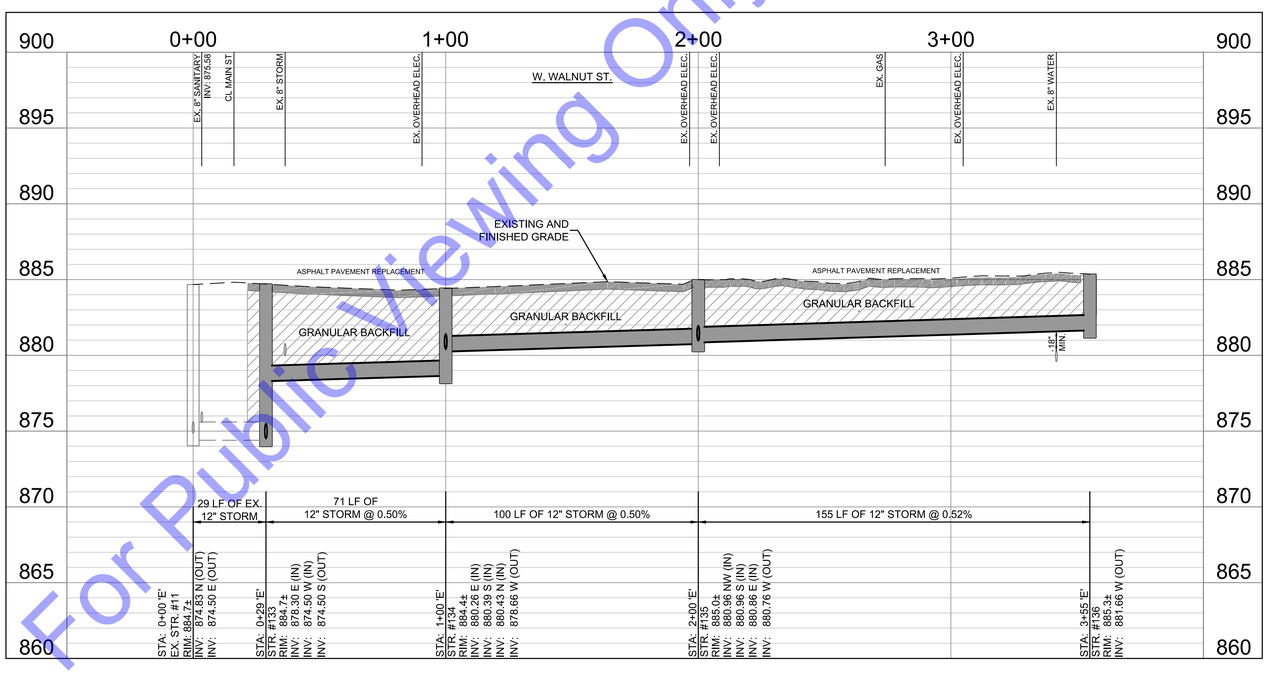

PROFILE - LINE 'E'

HORIZONTAL SCALE: 1"=30'-0"

VERTICAL SCALE: 1"=5'-0"

SCALE: 1"=30'

30' 0 30'

CODED NOTES

1. SEE EC DRAWINGS FOR EROSION CONTROL MEASURES.
2. CONTRACTOR TO VERIFY EX. UTILITY LOCATIONS PRIOR TO ANY CONSTRUCTION. IN THE EVENT OF UTILITY CONFLICTS, CONTRACTOR SHALL NOTIFY UTILITY TO RELOCATE TO AVOID CONFLICTS.
3. CONTRACTOR TO PROTECT ANY EXISTING STORM SEWER AND STRUCTURES AND/OR FIELD TILE ENCOUNTERED DURING CONSTRUCTION. IF ENCOUNTERED AND DISTURBED, CONTRACTOR TO REPLACE TO A CONDITION EQUAL TO OR BETTER.
4. EARLY ACTION ITEM: CONTRACTOR TO FIELD VERIFY LOCATION AND DEPTH OF EXISTING WATER MAIN PRIOR TO CONSTRUCTION ON LINE 'E'. MAINTAIN MINIMUM REQUIRED SEPARATION DURING INSTALLATION OF LINE 'E'.
5. EARLY ACTION ITEM: CONTRACTOR TO FIELD VERIFY LOCATION, SIZE AND DEPTH OF EXISTING STORM SEWER PRIOR TO CONSTRUCTION ON LINE 'E'.
6. CONTRACTOR TO PROTECT/SUPPORT UTILITY POLES DURING CONSTRUCTION.

NOTE:
THE EXISTING AND PROPOSED PROFILE GRADES ARE BASED ON THE ELEVATIONS AT THE CENTERLINE OF THE PROPOSED SANITARY SEWER.

COMMONWEALTH ENGINEERS, INC.
A wealth of resources to master a common goal.
https://commonwealthengineers.com/
OFFICE LOCATIONS IN:
INDIANAPOLIS, IN. (2)
EVANSVILLE, IN.
FORT WAYNE, IN.
CROWN POINT, IN.
BOWLING GREEN, KY.
SOUTH BEND, IN.

NATALIE M. SCHELLING REGISTERED No. 12000721 STATE OF INDIANA PROFESSIONAL ENGINEER

Signature Date 12/31/2024

TOWN OF CLAYPOOL
KOSCIUSKO COUNTY, INDIANA

CONTRACT C -
STORM SEWER
IMPROVEMENTS

Indiana 811 Know what's below. Call before you dig.
Know what's below. 811 before you dig.
1-800-382-5544
(ITS THE LAW)

No.	Submittal / Revision	By	Date

Designed By:	Drawn By:	Checked By:
BW	CH	NS
Issue Date: 12/2024	Project No: S23130	Scale: AS SHOWN

PLAN & PROFILE - LINE 'E' - STATION 0+00-3+55

Drawing No: PP6

Sheet: 12 OF 21

File: Z:\SHARED\IN CLIENTS A-L\CLAYPOOL\S23130 - WASTEWATER - STORMWATER IMPROVEMENTS\06 CAD\A CURRENT FILES\1 DRAWINGS\CONTRACT C\04- CLAYPOOL - PLAN AND PROFILES.DWG
Saved: 4/16/2025 3:46:12 PM Plotted: 4/16/2025 3:47:36 PM Current User: Brian Waterman LastSavedBy: bwaterman

NOTE:
CONTRACTOR TO FIELD VERIFY LOCATION, SIZE, AND DEPTH OF EXISTING STORM SEWER PRIOR TO ORDERING STRUCTURES.

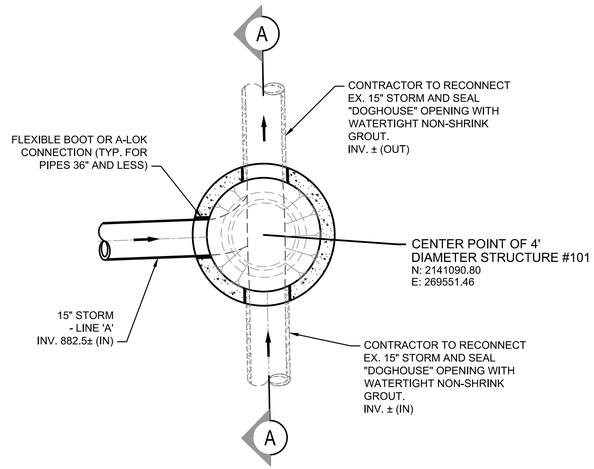

PLAN VIEW
(SEE DWG.PP1)

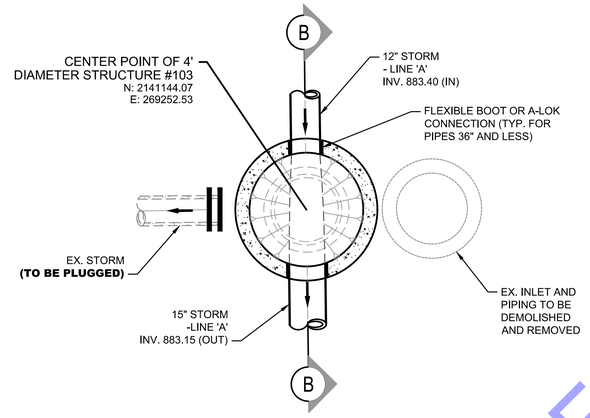

PLAN VIEW
(SEE DWG.PP1)

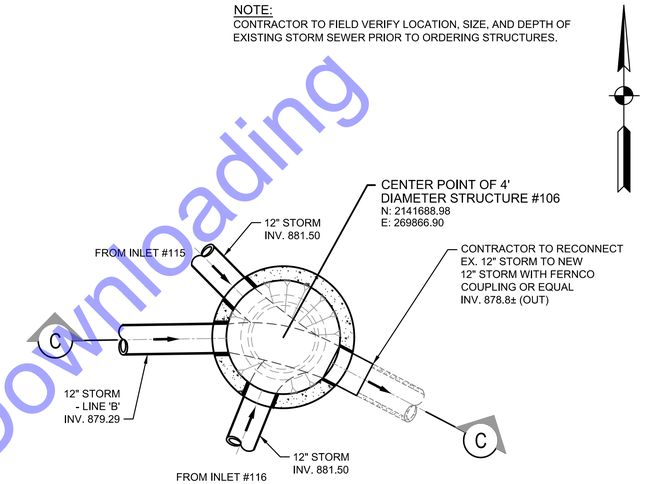

PLAN VIEW
(SEE DWG. PP2)

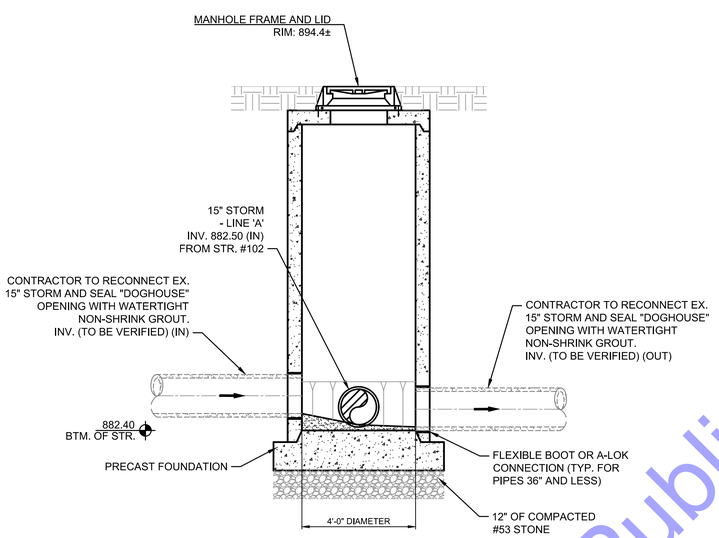

SECTION A

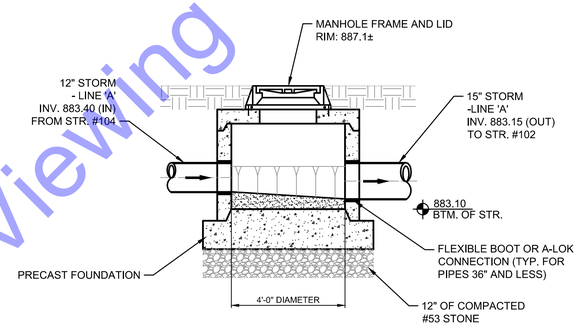

SECTION B

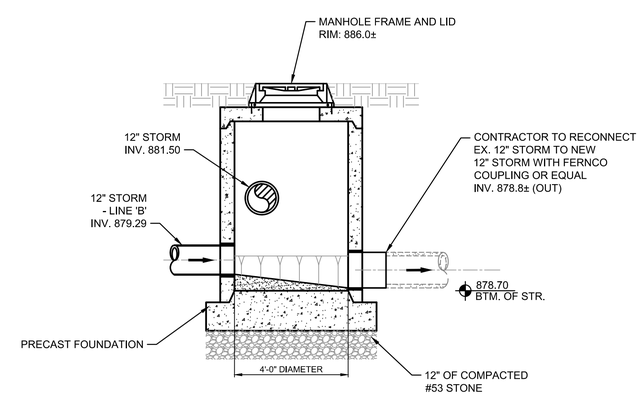

SECTION C

4' DIAMETER "DOGHOUSE" STRUCTURE #101
SCALE: 3/8"=1'-0"

4' DIAMETER STRUCTURE #103
SCALE: 3/8"=1'-0"

4' DIAMETER STRUCTURE #106
SCALE: 3/8"=1'-0"

COMMONWEALTH ENGINEERS, INC.
A wealth of resources to master a common goal.
https://commonwealthengineers.com/
OFFICE LOCATIONS IN:
INDIANAPOLIS, IN. (2)
EVANSVILLE, IN.
FORT WAYNE, IN.
CROWN POINT, IN.
BOWLING GREEN, KY.
SOUTH BEND, IN.

NATALIE M. SCHELLING
REGISTERED No. 12000721 STATE OF INDIANA PROFESSIONAL ENGINEER
Signature 12/31/2024 Date

TOWN OF CLAYPOOL
KOSCIUSKO COUNTY, INDIANA

CONTRACT C -
STORM SEWER
IMPROVEMENTS

Indiana 811
Know what's below. Call before you dig.
Know what's below. 811 before you dig.
1-800-382-5544
(ITS THE LAW)

No.	Submittal / Revision	By	Date

Designed By:	Drawn By:	Checked By:
BW	CH	NS
Issue Date: 12/2024	Project No: S23130	Scale: AS SHOWN

STRUCTURE DETAILS

Drawing No:
SS1

Sheet: 13 OF 21

File: Z:\SHARED\IN CLIENTS A-L\CLAYPOOL\S23130 - WASTEWATER - STORMWATER IMPROVEMENTS\06 CAD\A CURRENT FILES\1 DRAWINGS\CONTRACT C\05- CLAYPOOL - STRUCTURE DETAILS.DWG
Saved: 4/8/2025 3:06:26 PM Plotted: 4/8/2025 3:44:37 PM Current User: Craig Higbie LastSavedBy: chigbie

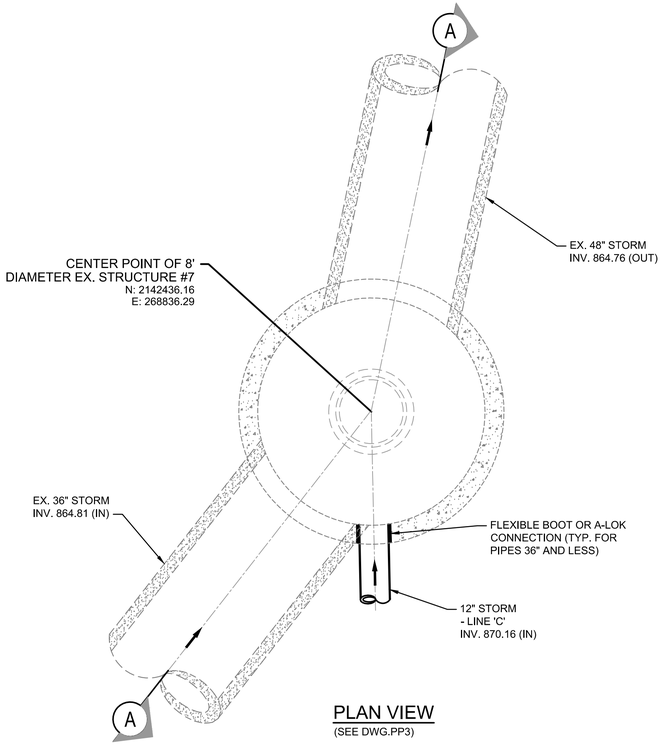

PLAN VIEW
(SEE DWG.PP3)

NOTE:
CONTRACTOR TO FIELD VERIFY LOCATION, SIZE, AND DEPTH OF EXISTING STORM SEWER PRIOR TO ORDERING STRUCTURES.

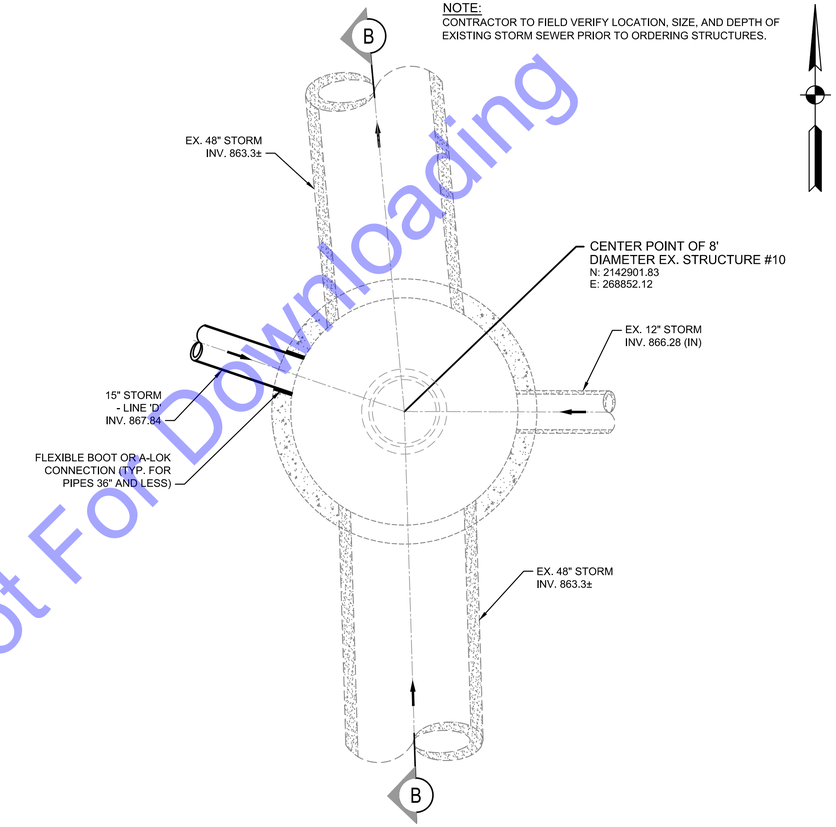

PLAN VIEW
(SEE DWG.PP4)

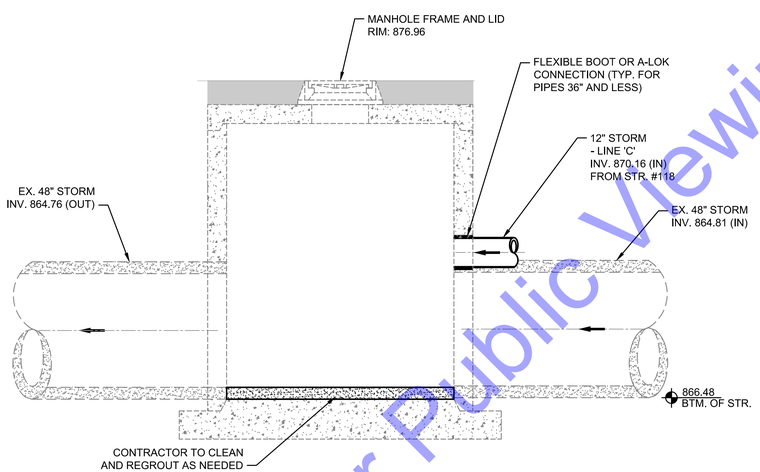

SECTION A

8' DIAMETER EX. STRUCTURE #7
SCALE: 3/8"=1'-0"

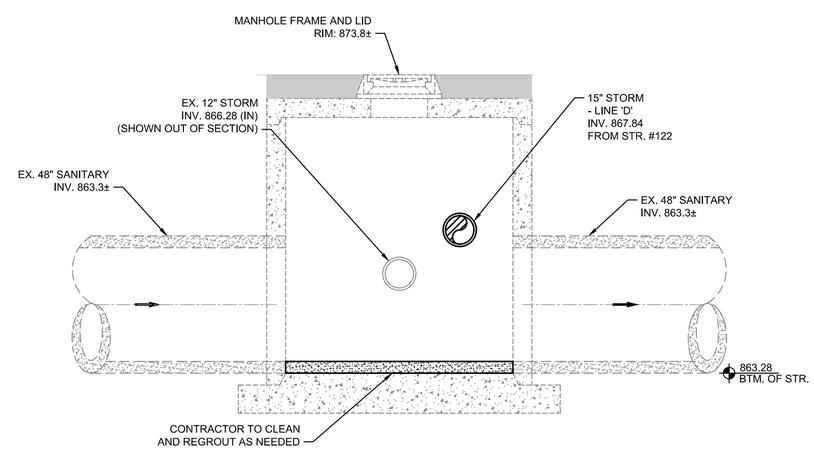

SECTION B

8' DIAMETER EX. STRUCTURE #10
SCALE: 3/8"=1'-0"

COMMONWEALTH ENGINEERS, INC.
A wealth of resources to master a common goal.
https://commonwealthengineers.com/
OFFICE LOCATIONS IN:
INDIANAPOLIS, IN. (2)
EVANSVILLE, IN.
FORT WAYNE, IN.
CROWN POINT, IN.
BOWLING GREEN, KY.
SOUTH BEND, IN.

NATALIE M. SCHELLING
REGISTERED
No. 12000721
STATE OF INDIANA
PROFESSIONAL ENGINEER

Signature 12/31/2024 Date

TOWN OF CLAYPOOL
KOSCIUSKO COUNTY, INDIANA

CONTRACT C -
STORM SEWER
IMPROVEMENTS

Indiana811 Know what's below. Call before you dig.
Know what's below. 811 before you dig.
1-800-382-5544 (ITS THE LAW)

No.	Submittal Revision	By	Date

Designed By:	Drawn By:	Checked By:
BW	CH	NS
Issue Date: 12/2024	Project No: S23130	Scale: AS SHOWN

STRUCTURE DETAILS

Drawing No:
SS2

File: Z:\SHARED\IN CLIENTS A-L\CLAYPOOL\S23130 - WASTEWATER - STORMWATER IMPROVEMENTS\06 CAD\A CURRENT FILES\1 DRAWINGS\CONTRACT C\05- CLAYPOOL - STRUCTURE DETAILS.DWG
Saved: 4/8/2025 3:06:26 PM Plotted: 4/8/2025 3:44:38 PM Current User: Craig Higbie LastSavedBy: chigbie

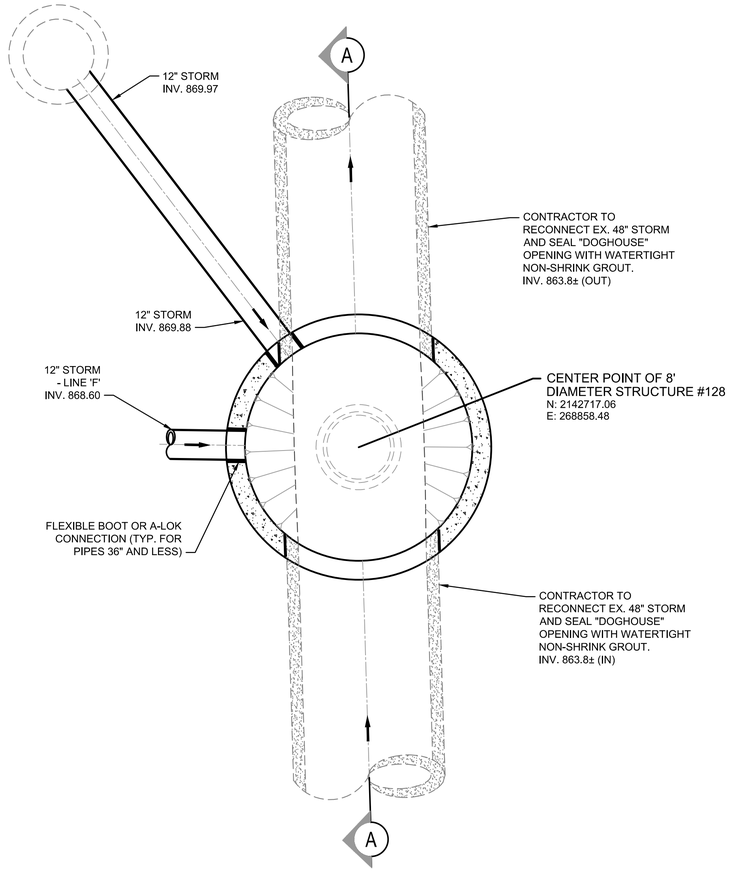

PLAN VIEW
(SEE DWG.PP5)

NOTE:
CONTRACTOR TO FIELD VERIFY LOCATION, SIZE, AND DEPTH OF EXISTING STORM SEWER PRIOR TO ORDERING STRUCTURES.

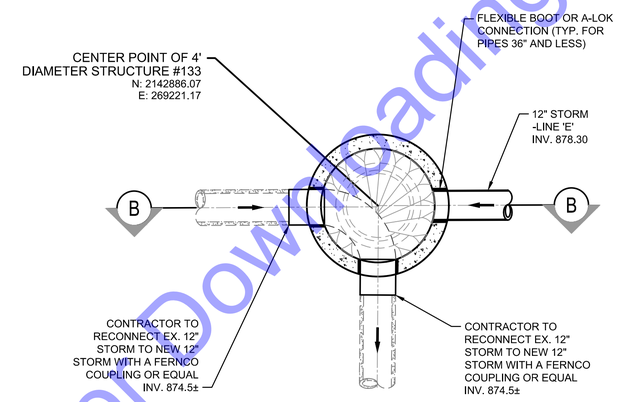

PLAN VIEW
(SEE DWG.PP6)

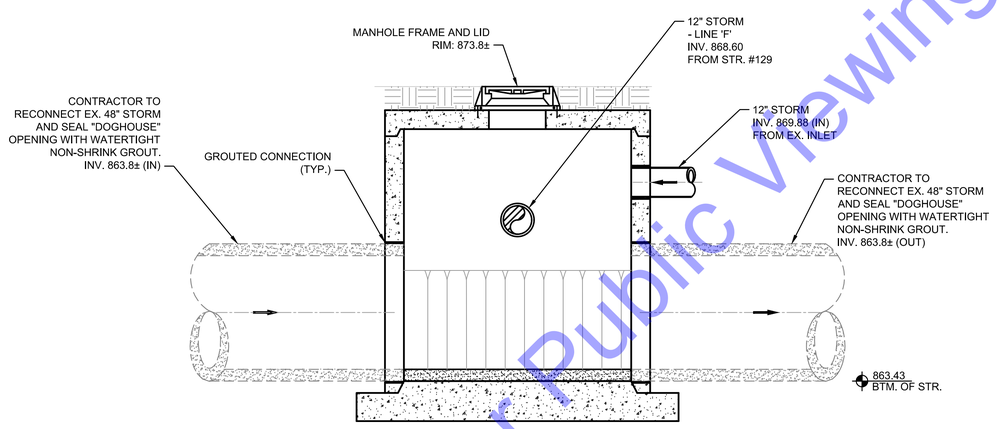

SECTION A

8' DIAMETER 'DOGHOUSE' STRUCTURE #128
SCALE: 3/8"=1'-0"

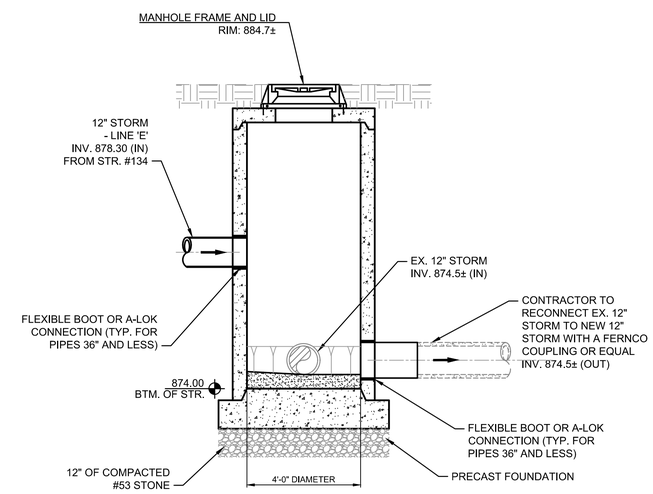

SECTION B

4' DIAMETER STRUCTURE #133
SCALE: 3/8"=1'-0"

COMMONWEALTH ENGINEERS, INC.
A wealth of resources to realize a common goal.
https://commonwealthengineers.com/
OFFICE LOCATIONS IN:
INDIANAPOLIS, IN. (2)
EVANSVILLE, IN.
FORT WAYNE, IN.
CROWN POINT, IN.
BOWLING GREEN, KY.
SOUTH BEND, IN.

NATALIE M. SCHELLING
REGISTERED
No. 12000721
STATE OF INDIANA
PROFESSIONAL ENGINEER

Signature 12/31/2024 Date

TOWN OF CLAYPOOL
KOSCIUSKO COUNTY, INDIANA

CONTRACT C -
STORM SEWER
IMPROVEMENTS

Indiana811 Know what's below. Call before you dig.
Know what's below. 811 before you dig.
1-800-382-5544
(ITS THE LAW)

No.	Submittal / Revision	By	Date

Designed By:	Drawn By:	Checked By:
BW	CH	NS
Issue Date: 12/2024	Project No: S23130	Scale: AS SHOWN

STRUCTURE DETAILS

Drawing No:
SS3

Sheet: 15 OF 21

File: Z:\SHARED\IN CLIENTS A-L\CLAYPOOL\S23130 - WASTEWATER - STORMWATER IMPROVEMENTS\06 CAD\A CURRENT FILES\1 DRAWINGS\CONTRACT C\05- CLAYPOOL - STRUCTURE DETAILS.DWG
Saved: 4/8/2025 3:06:28 PM Plotted: 4/8/2025 3:44:39 PM Current User: Craig Higbie LastSavedBy: chigbie

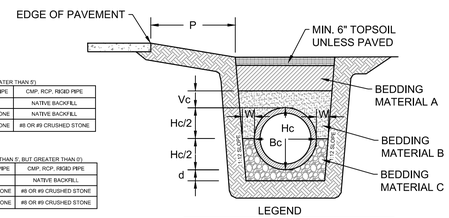

BEDDING MATERIAL DESIGNATION (P GREATER THAN 5')

	PVC, HDPE, PLASTIC PIPE	CMP, RCP, RIGID PIPE
MATERIAL A	NATIVE BACKFILL	NATIVE BACKFILL
MATERIAL B	#8 OR #9 CRUSHED STONE	NATIVE BACKFILL
MATERIAL C	#8 OR #9 CRUSHED STONE	#8 OR #9 CRUSHED STONE

BEDDING MATERIAL DESIGNATION (LESS THAN 5', BUT GREATER THAN 0')

	PVC, HDPE, PLASTIC PIPE	CMP, RCP, RIGID PIPE
MATERIAL A	NATIVE BACKFILL	NATIVE BACKFILL
MATERIAL B	#8 OR #9 CRUSHED STONE	#8 OR #9 CRUSHED STONE
MATERIAL C	#8 OR #9 CRUSHED STONE	#8 OR #9 CRUSHED STONE

BEDDING MATERIAL DESIGNATION (PIPE UNDER PAVEMENT OR DRIVEWAY)

	PVC, HDPE, PLASTIC PIPE	CMP, RCP, RIGID PIPE
MATERIAL A	PIPE NOT ALLOWED	#8 OR #9 CRUSHED STONE
MATERIAL B	PIPE NOT ALLOWED	#8 OR #9 CRUSHED STONE
MATERIAL C	PIPE NOT ALLOWED	#8 OR #9 CRUSHED STONE

LEGEND

P = DISTANCE FROM EDGE OF PAVEMENT
Hc = OUTSIDE DIAMETER OR RISE
Bc = OUTSIDE DIAMETER OR SPAN
d = DEPTH OF BEDDING MATERIAL BELOW PIPE
= 8" MIN. FOR FILL HEIGHT UP TO 16'
= 12" MIN FOR FILL HEIGHT OF 16' OR MORE
Vc = 12" FOR Bc UP TO 18"
= 18" FOR Bc GREATER THAN 18"
W = 0.3 Bc OR 9", WHICHEVER IS GREATER

NOTES:

1. INDOT TYPE 1 PIPE REQUIRED FOR STORM SEWERS/CULVERTS UNDER PAVEMENT
2. INDOT TYPE 2 PIPE REQUIRED FOR STORM SEWERS/CULVERTS OUTSIDE OF PAVEMENT
3. ALL BEDDING SHALL BE INSTALLED IN 6" TO 12" BALANCED LIFTS
4. FOR BACKFILL PURPOSES, PAVED SHOULDERS, CURBS, GUTTERS, AND SIDEWALKS AREA CONSIDERED PAVEMENT
5. FLOWABLE BACKFILL SHALL BE ENCASED BY A MINIMUM OF 2' OF COMPACTED EARTH BACKFILL
6. PLASTIC PIPES FABRICATED ON HYDROSTATIC DESIGN BASIS RATED RESINS CONSIDERED RIGID FOR BACKFILL PURPOSES
7. MANUFACTURER'S SPECIFICATIONS MAY BE ACCEPTED FOR USE WITH PVC, HDPE, AND PLASTIC PIPES AS AN ALTERNATIVE TO THE MATERIALS NOTED HERE (WITH PRIOR APPROVAL OF THE COUNTY SURVEYOR).

PIPE BEDDING AND BACKFILL FOR STORM SEWERS

NOT TO SCALE

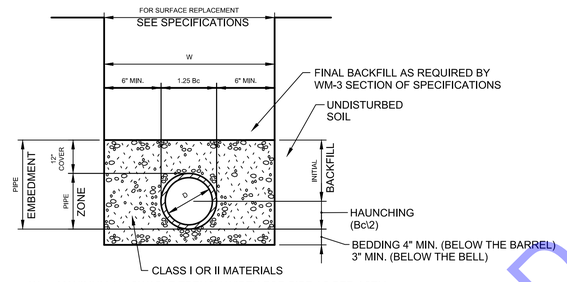

W = MAXIMUM ALLOWABLE TRENCH WIDTH FOR PIPE AS PER ASTM
NOT TO EXCEED FOUR (4) FEET FOR 6" THROUGH 24" PIPE
NOR SIX (6) FEET FOR 27" THROUGH 48" PIPE
D = PIPE DIAMETER (INTERNAL)
Bc = PIPE DIAMETER (EXTERNAL)

NOTES:

1. COMPACTED INITIAL BACKFILL SHALL EXTEND A MINIMUM OF 12" ABOVE THE TOP OF THE PIPE. FINAL BACKFILL ABOVE THIS POINT SHALL BE IN ACCORDANCE WITH THE SPECIFICATIONS AND AS REQUIRED HEREIN.
2. WHEN CLASS I MATERIAL IS USED FOR BEDDING, HAUNCHING, AND INITIAL BACKFILL COMPACTION MAY BE ACCOMPLISHED BY HAND OR MECHANICAL TAMPING, OR BY WALKING TO A MINIMUM OF 85% STANDARD PROCTOR DENSITY.
3. WHEN CLASS II MATERIAL IS USED FOR BEDDING, HAUNCHING, AND INITIAL BACKFILL COMPACTION MAY BE ACCOMPLISHED BY HAND OR MECHANICAL TAMPING TO A MINIMUM OF 85% STANDARD PROCTOR DENSITY.
4. WORK FALLING UNDER THE JURISDICTION OF THE INDIANA DEPARTMENT OF TRANSPORTATION (INDOT) OR UNDER PAVED DRIVES SHALL UTILIZE COMPACTED GRANULAR BACKFILL MATERIAL FOR INITIAL AND FINAL BACKFILL ANYWHERE WITHIN 12 FEET OF THE EDGE OF PAVEMENT. FOR ALL OTHER NON-INDOT PAVEMENT AREAS (INCLUDING BOTH HARD SURFACED AND COMPACTED AGGREGATE), COMPACTED GRANULAR BACKFILL MATERIAL SHALL BE USED WITHIN 5 FEET OF THE EDGE OF THE PAVEMENT.

TRENCH DETAIL FOR FLEXIBLE CONDUITS

NO SCALE (COMPLIABLE FOR PVC AND HDPE PIPES AND CONDUITS)

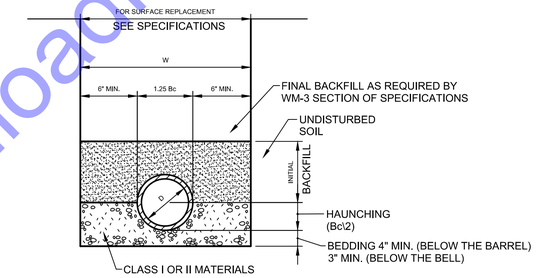

W = MAXIMUM ALLOWABLE TRENCH WIDTH FOR PIPE AS PER ASTM
NOT TO EXCEED FOUR (4) FEET FOR 6" THROUGH 24" PIPE
NOR SIX (6) FEET FOR 27" THROUGH 48" PIPE
D = PIPE DIAMETER (INTERNAL)
Bc = PIPE DIAMETER (EXTERNAL)

NOTES:

1. COMPACTED BEDDING STOPS AT SPRING-LINE OF THE PIPE. BACKFILLING ABOVE THIS POINT SHALL BE IN ACCORDANCE WITH THE SPECIFICATIONS AND AS REQUIRED HEREIN.
2. WHEN CLASS I MATERIAL IS USED FOR BEDDING, COMPACTION MAY BE ACCOMPLISHED BY HAND OR MECHANICAL TAMPING.
3. WHEN CLASS II MATERIAL IS USED FOR BEDDING, COMPACTION SHALL BE ACCOMPLISHED ONLY BY HAND OR MECHANICAL TAMPING TO A MINIMUM OF 95% STANDARD PROCTOR DENSITY.
4. WORK FALLING UNDER THE JURISDICTION OF THE INDIANA DEPARTMENT OF TRANSPORTATION (INDOT) OR UNDER PAVED DRIVES SHALL UTILIZE COMPACTED GRANULAR BACKFILL MATERIAL FOR INITIAL AND FINAL BACKFILL ANYWHERE WITHIN 12 FEET PF THE EDGE OF PAVEMENT. FOR ALL OTHER NON-INDOT PAVEMENT AREAS(INCLUDING BOTH HARD SURFACED AND COMPACTED AGGREGATE), COMPACTED GRANULAR BACKFILL MATERIAL SHALL BE USED WITHIN 5 FEET OF THE EDGE OF THE PAVEMENT.

TRENCH DETAIL FOR RIGID CONDUITS

NO SCALE (COMPLIABLE FOR CONCRETE AND DUCTILE IRON PIPE)

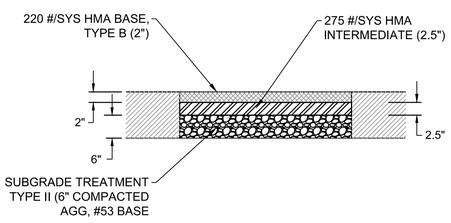

ASPHALT PAVEMENT - REPLACEMENT DETAIL

SCALE: NTS

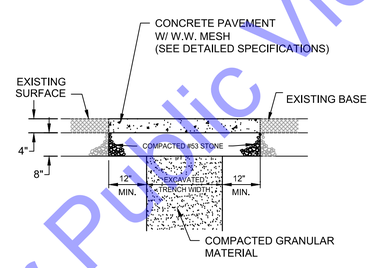

SURFACE RESTORATION DETAIL FOR CONCRETE PAVEMENT - DRIVE

SCALE: NTS

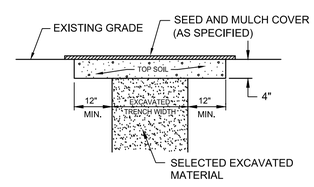

SURFACE RESTORATION DETAIL FOR GRASS AREAS

SCALE: NTS

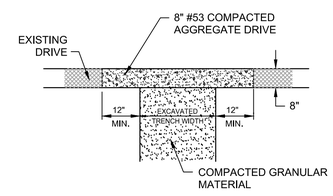

SURFACE RESTORATION DETAIL FOR GRAVEL PAVEMENT - ROAD

SCALE: N.T.S.

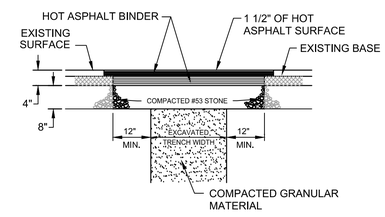

SURFACE RESTORATION DETAIL FOR ASPHALT PAVEMENT - ROAD

SCALE: NTS

COMMONWEALTH ENGINEERS, INC.
A wealth of resources to master a common goal.
https://commonwealthengineers.com/
OFFICE LOCATIONS IN:
INDIANAPOLIS, IN. (2)
EVANSVILLE, IN.
FORT WAYNE, IN.
CROWN POINT, IN.
BOWLING GREEN, KY.
SOUTH BEND, IN.

NATALIE M. SCHELLING
REGISTERED
No. 12000721
STATE OF INDIANA
PROFESSIONAL ENGINEER

Signature Date 12/31/2024

No.	Submittal / Revision	By	Date

Designed By:	Drawn By:	Checked By:
BW	CH	NS
Issue Date: 12/2024	Project No: S23130	Scale: AS SHOWN

TOWN OF CLAYPOOL
KOSCIUSKO COUNTY, INDIANA

CONTRACT C -
STORM SEWER
IMPROVEMENTS

MISCELLANEOUS DETAILS

Drawing No:
MD1

Sheet: 16 OF 21

Indiana 811 Know what's below. Call before you dig.
Know what's below. 811 before you dig.
1-800-382-5544
(ITS THE LAW)

File: Z:\SHARED\IN CLIENTS A-L\CLAYPOOL\S23130 - WASTEWATER IMPROVEMENTS\06 CAD\A CURRENT FILES\1 DRAWINGS\CONTRACT C\09-CLAYPOOL- MISC DETAILS.DWG
Saved: 4/8/2025 9:57:55 AM Plotted: 4/8/2025 3:44:43 PM Current User: Craig Higbie LastSavedBy: chigbie

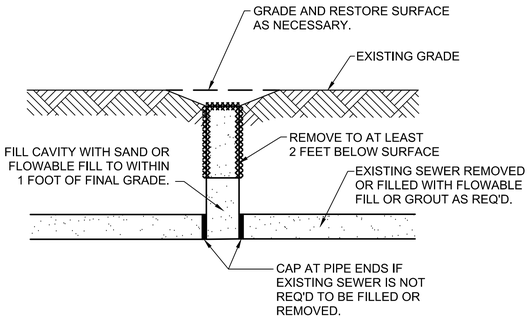

REMOVAL OF EXISTING MANHOLE OR INLET FOR STORM SEWER STRUCTURES

NO SCALE

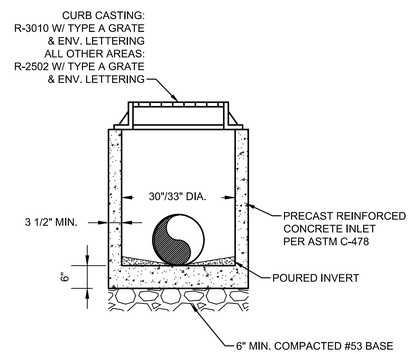

30"/33" DIAMETER STORM INLET DETAIL

NO SCALE

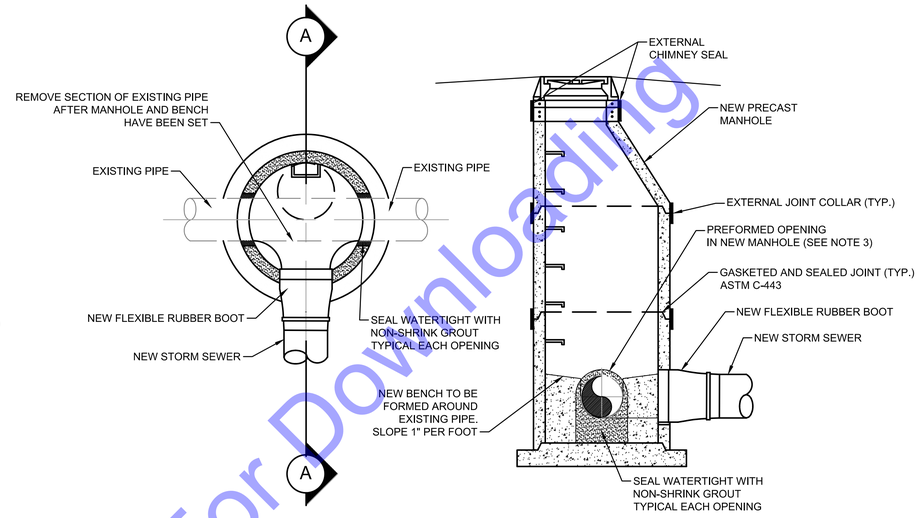

PLAN VIEW

SECTION A

GENERAL NOTES:

1. ALL REINFORCING SHALL MEET ASTM C-478
2. HOLES IN PRECAST UNITS SHALL BE 4" MIN. TO 8" MAX. LARGER THAN THE OUTSIDE DIAMETER OF THE PROPOSED PIPE

NEW "DOG-HOUSE" MANHOLE OVER EXISTING STORM DETAIL

NO SCALE

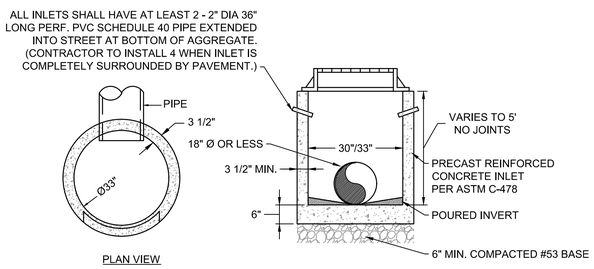

PLAN VIEW

STORM INLET

SCALE: NONE

CASTING INFORMATION:

STORM COVER:
1022Z1 FRAME WITH 1020A COVER

STORM INLET:
1022Z1 FRAME WITH 1020M1 GRATE

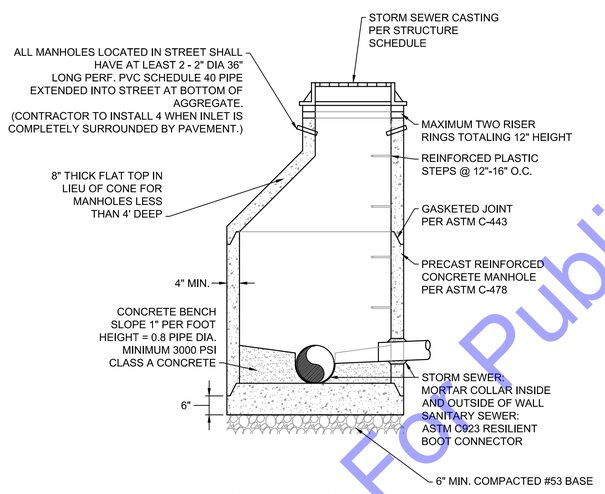

STORM MANHOLE

SCALE: NONE

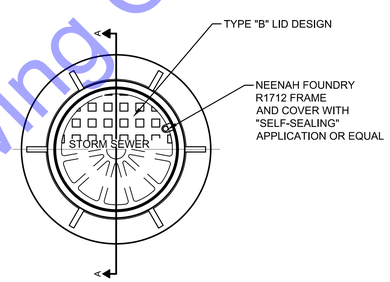

PLAN VIEW

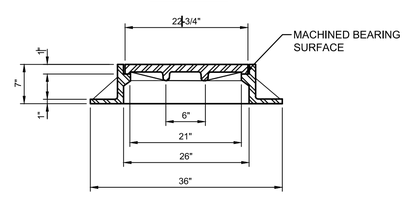

SECTION A

STORM SEWER MANHOLE FRAME AND COVER - STANDARD MANHOLE

NO SCALE

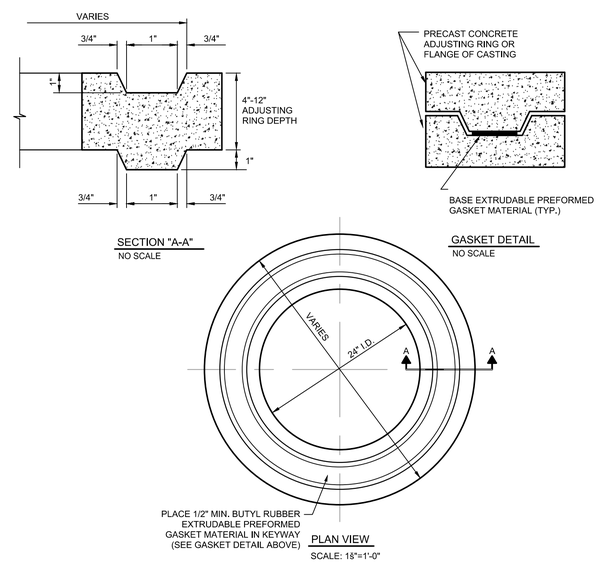

SECTION "A-A"
NO SCALE

GASKET DETAIL
NO SCALE

PLAN VIEW
SCALE: 1⅛"=1'-0"

ADJUSTING RING DETAIL

NO SCALE

COMMONWEALTH ENGINEERS, INC.
A wealth of resources to master a common goal.
https://commonwealthengineers.com/
OFFICE LOCATIONS IN:
INDIANAPOLIS, IN. (2)
EVANSVILLE, IN.
FORT WAYNE, IN.
CROWN POINT, IN.
BOWLING GREEN, KY.
SOUTH BEND, IN.

NATALIE M. SCHELLING REGISTERED No. 12000721 STATE OF INDIANA PROFESSIONAL ENGINEER

Signature 12/31/2024 Date

TOWN OF CLAYPOOL
KOSCIUSKO COUNTY, INDIANA

CONTRACT C -
STORM SEWER
IMPROVEMENTS

Indiana 811 Know what's below. Call before you dig.
Know what's below. 811 before you dig.
1-800-382-5544
(ITS THE LAW)

No.	Submittal / Revision	By	Date

Designed By:	Drawn By:	Checked By:
BW	CH	NS
Issue Date: 12/2024	Project No: S23130	Scale: AS SHOWN

MISCELLANEOUS DETAILS

Drawing No:
MD2

Sheet: 17 OF 21

File: Z:\SHARED\IN CLIENTS A-L\CLAYPOOL\S23130 - WASTEWATER IMPROVEMENTS\06 CAD\A CURRENT FILES\1 DRAWINGS\CONTRACT C\09-CLAYPOOL- MISC DETAILS.DWG
Saved: 4/8/2025 9:57:55 AM Plotted: 4/8/2025 3:44:45 PM Current User: Craig Higbie LastSavedBy: chigbie

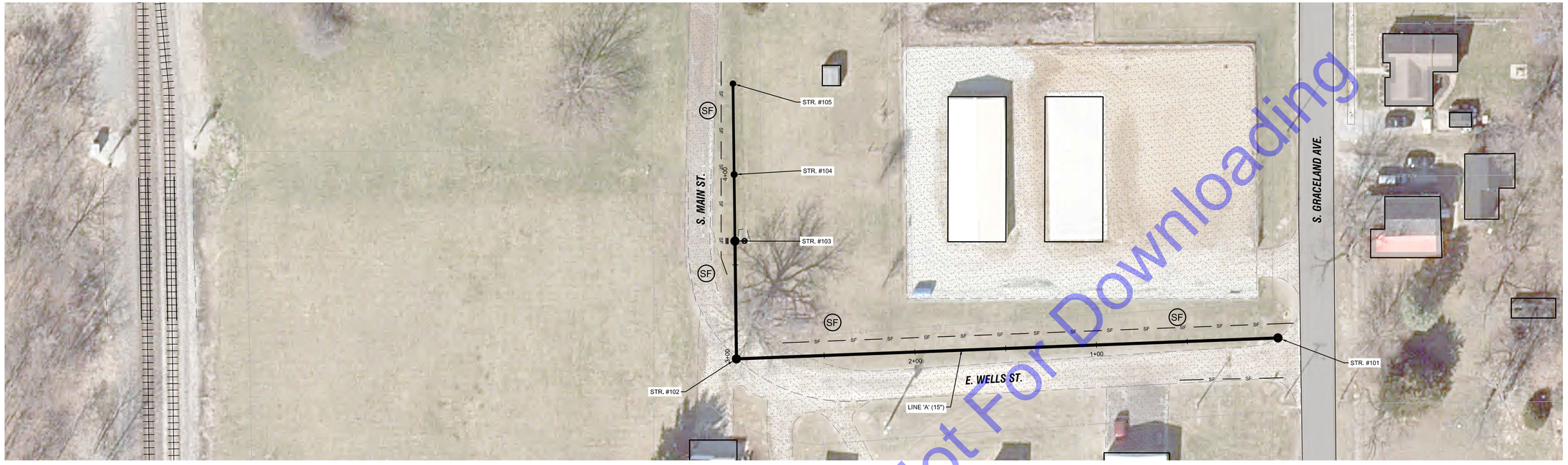

EROSION CONTROL PLAN
LINE 'A'
SCALE: 1"=30'-0"

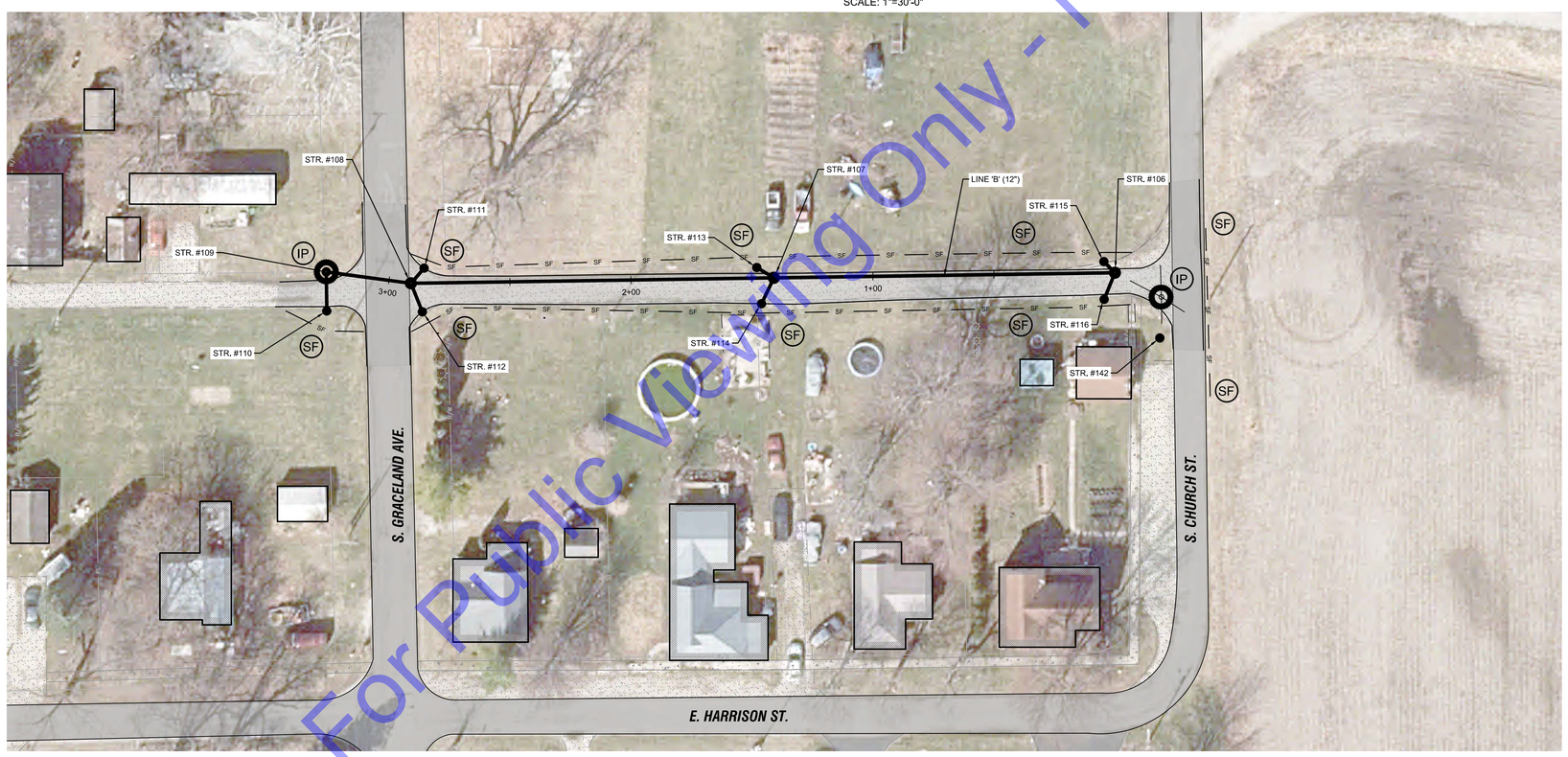

EROSION CONTROL PLAN
LINE 'B'
SCALE: 1"=30'-0"

SCALE: 1"=30'

30' 0 30'

EROSION CONTROL LEGEND

— SF —	SILT FENCE
▬	ROCK CHECK DAM
○	INLET PROTECTION

COMMONWEALTH ENGINEERS, INC.
A wealth of resources to master a common goal.
https://commonwealthengineers.com/
OFFICE LOCATIONS IN:
INDIANAPOLIS, IN. (2)
EVANSVILLE, IN.
FORT WAYNE, IN.
CROWN POINT, IN.
BOWLING GREEN, KY.
SOUTH BEND, IN.

NATALIE M. SCHELLING
REGISTERED
No. 12000721
STATE OF INDIANA
PROFESSIONAL ENGINEER

Signature 12/31/2024 Date

TOWN OF CLAYPOOL
KOSCIUSKO COUNTY, INDIANA

CONTRACT C -
STORM SEWER
IMPROVEMENTS

Indiana 811
Know what's below. Call before you dig.
Know what's below. 811 before you dig.
1-800-382-5544
(ITS THE LAW)

No.	Submittal / Revision	By	Date

Designed By:	Drawn By:	Checked By:
BW	CH	NS
Issue Date: 12/2024	Project No: S23130	Scale: AS SHOWN

EROSION CONTROL

Drawing No:
EC1

Sheet: 18 OF 21

File: Z:\SHARED\IN CLIENTS A-L\CLAYPOOL\S23130 - WASTEWATER - STORMWATER IMPROVEMENTS\06 CAD\A CURRENT FILES\1 DRAWINGS\CONTRACT C\11-CLAYPOOL- EROSION CONTROL.DWG
Saved: 4/8/2025 10:07:41 AM Plotted: 4/8/2025 3:45:02 PM Current User: Craig Higbie LastSavedBy: chigbie

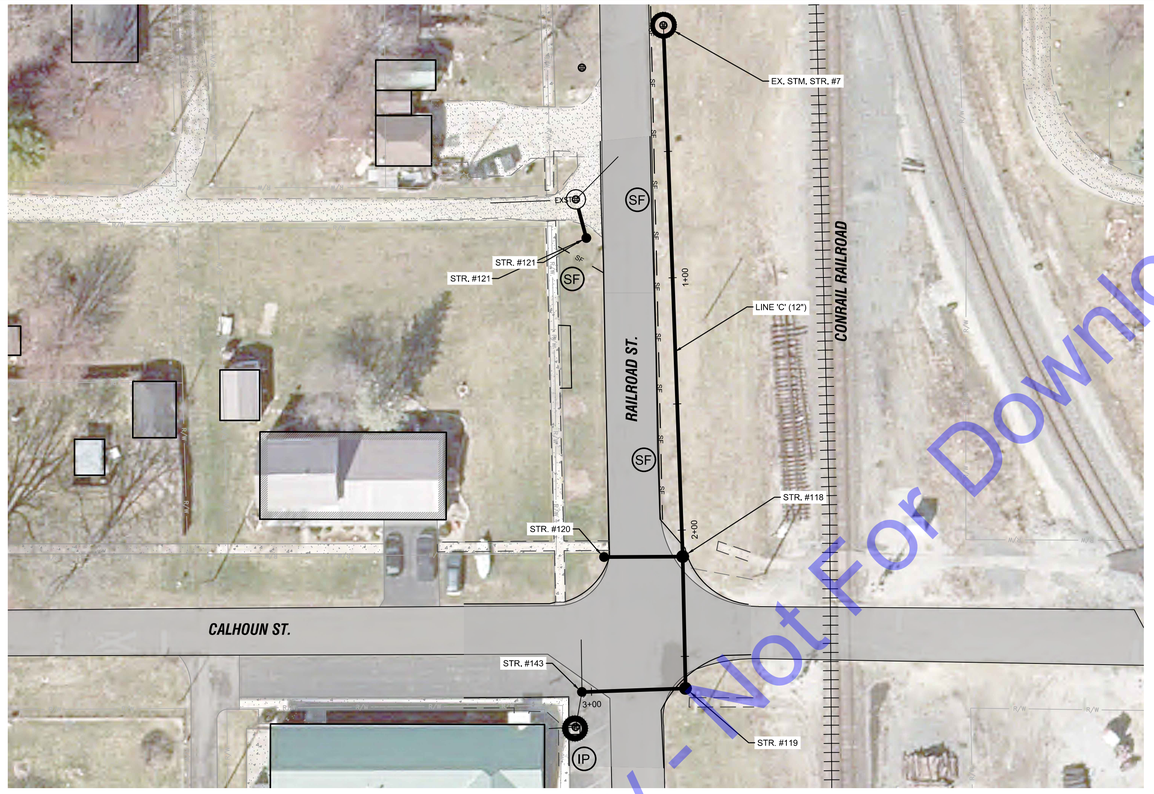

EROSION CONTROL PLAN
LINE 'C'
SCALE: 1"=30'-0"

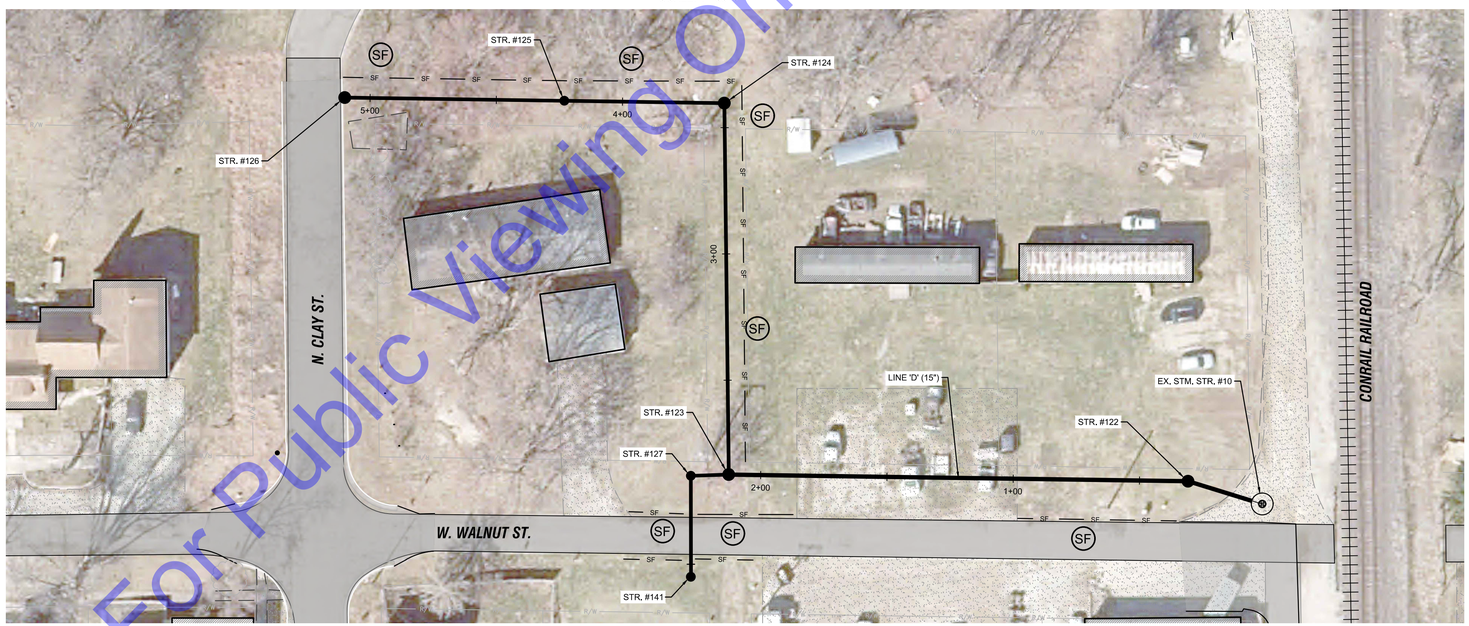

EROSION CONTROL PLAN
LINE 'D'
SCALE: 1"=30'-0"

SCALE: 1"=30'
30' 0 30'

EROSION CONTROL LEGEND

— SF — (SF)	SILT FENCE
▬ (CD)	ROCK CHECK DAM
○ (IP)	INLET PROTECTION

COMMONWEALTH ENGINEERS, INC.
A wealth of resources to master a common goal.
https://commonwealthengineers.com/
OFFICE LOCATIONS IN:
INDIANAPOLIS, IN. (2)
EVANSVILLE, IN.
FORT WAYNE, IN.
CROWN POINT, IN.
BOWLING GREEN, KY.
SOUTH BEND, IN.

NATALIE M. SCHELLING
REGISTERED No. 12000721 STATE OF INDIANA
PROFESSIONAL ENGINEER

Signature 12/31/2024 Date

TOWN OF CLAYPOOL
KOSCIUSKO COUNTY, INDIANA

CONTRACT C -
STORM SEWER
IMPROVEMENTS

Call before you dig.
Know what's below.
Know what's below. 811 before you dig.
1-800-382-5544
(ITS THE LAW)

No.	Submittal / Revision	By	Date

Designed By:	Drawn By:	Checked By:
BW	CH	NS
Issue Date: 12/2024	Project No: S23130	Scale: AS SHOWN

EROSION CONTROL

Drawing No:
EC2
Sheet: 19 OF 21

File: Z:\SHARED\IN CLIENTS A-L\CLAYPOOL\S23130 - WASTEWATER - STORMWATER IMPROVEMENTS\06 CAD\A CURRENT FILES\1 DRAWINGS\CONTRACT C\11-CLAYPOOL- EROSION CONTROL.DWG
Saved: 4/8/2025 10:07:41 AM Plotted: 4/8/2025 3:45:08 PM Current User: Craig Higbie LastSavedBy: chigbie

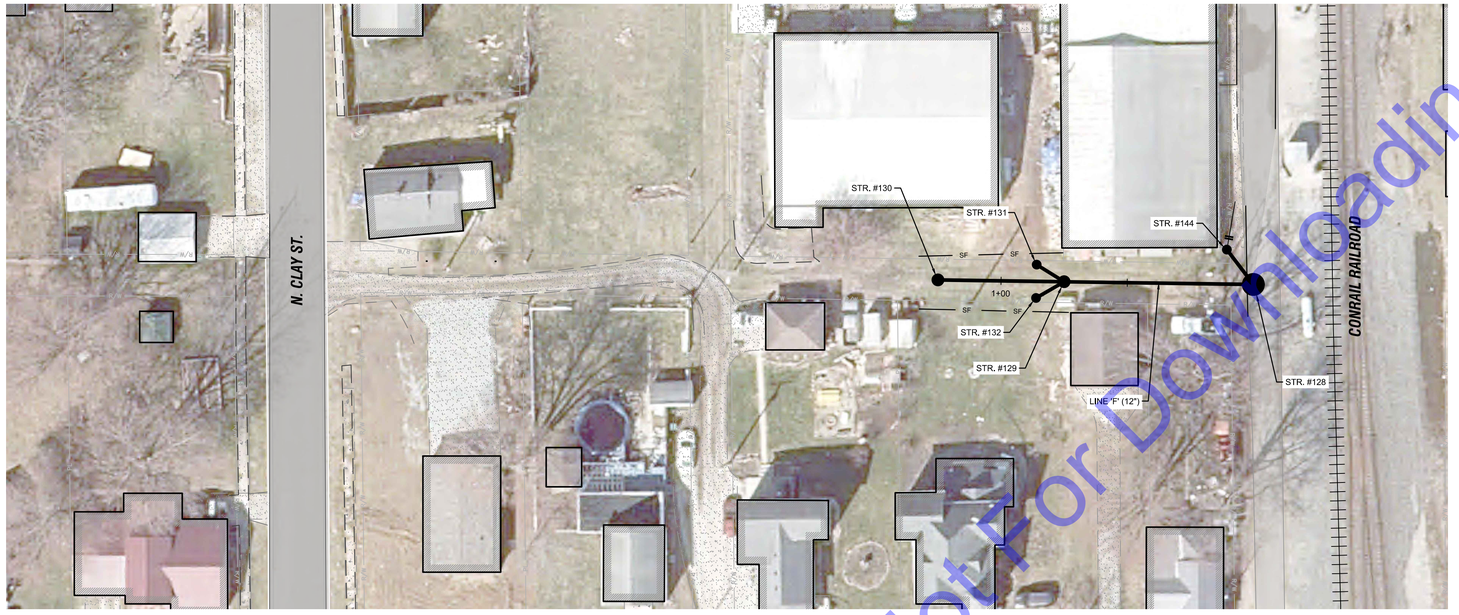

EROSION CONTROL PLAN
LINE 'F'
SCALE: 1"=30'-0"

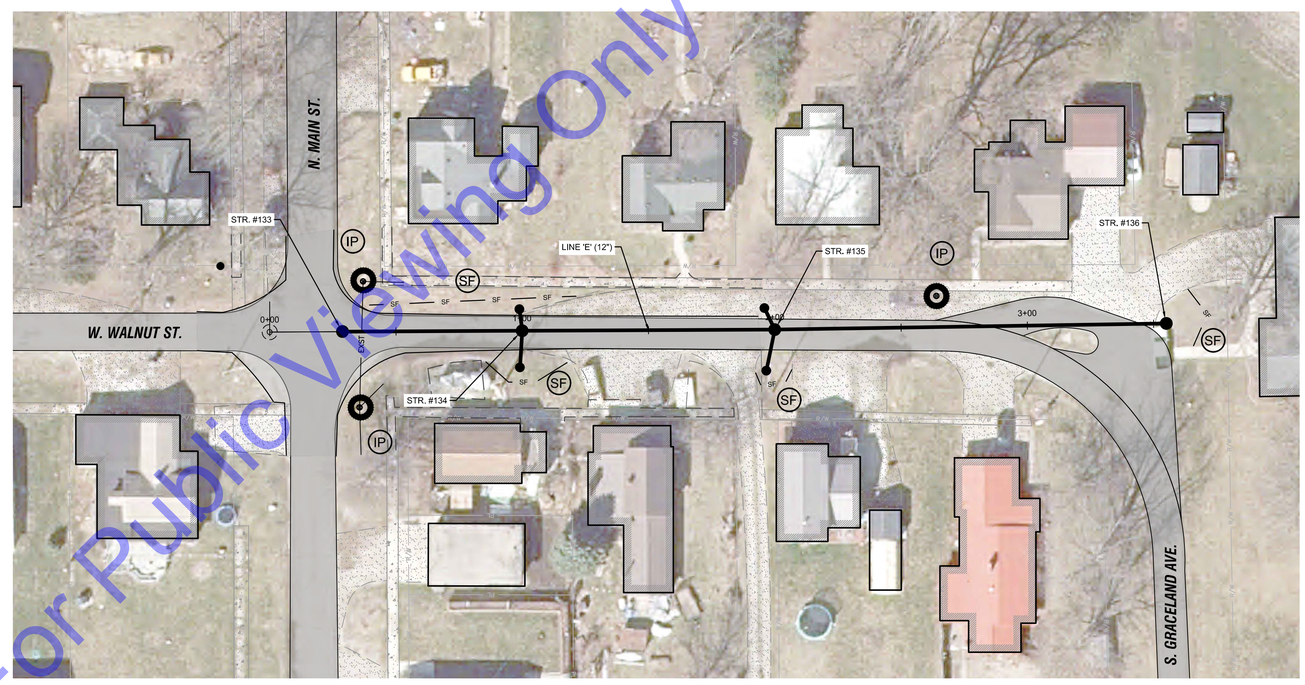

EROSION CONTROL PLAN
LINE 'E'
SCALE: 1"=30'-0"

SCALE: 1"=30'

30' 0 30'

EROSION CONTROL LEGEND

— SF — (SF)	SILT FENCE
▬ (CD)	ROCK CHECK DAM
○ (IP)	INLET PROTECTION

COMMONWEALTH ENGINEERS, INC.
A wealth of resources to master a common goal.
https://commonwealthengineers.com/
OFFICE LOCATIONS IN:
INDIANAPOLIS, IN. (2)
EVANSVILLE, IN.
FORT WAYNE, IN.
CROWN POINT, IN.
BOWLING GREEN, KY.
SOUTH BEND, IN.

NATALIE M. SCHELLING
REGISTERED No. 12000721 STATE OF INDIANA PROFESSIONAL ENGINEER
Signature 12/31/2024 Date

No.	Submittal / Revision	By	Date

Designed By:	Drawn By:	Checked By:
BW	CH	NS
Issue Date: 12/2024	Project No: S23130	Scale: AS SHOWN

TOWN OF CLAYPOOL
KOSCIUSKO COUNTY, INDIANA

CONTRACT C -
STORM SEWER
IMPROVEMENTS

EROSION CONTROL

Drawing No:
EC3
Sheet: 20 OF 21

Indiana 811
Know what's below. Call before you dig.
Know what's below. 811 before you dig.
1-800-382-5544
(ITS THE LAW)

File: Z:\SHARED\IN CLIENTS A-L\CLAYPOOL\S23130 - WASTEWATER - STORMWATER IMPROVEMENTS\06 CAD\A CURRENT FILES\1 DRAWINGS\CONTRACT C\11-CLAYPOOL- EROSION CONTROL.DWG
Saved: 4/8/2025 10:07:41 AM Plotted: 4/8/2025 3:45:14 PM Current User: Craig Higbie LastSavedBy: chigbie

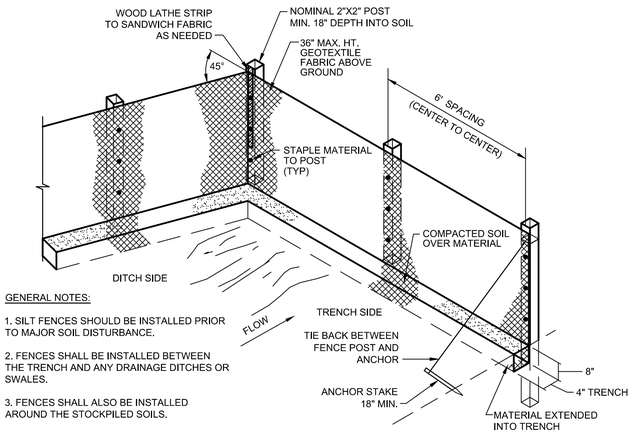

GENERAL NOTES:

1. SILT FENCES SHOULD BE INSTALLED PRIOR TO MAJOR SOIL DISTURBANCE.

2. FENCES SHALL BE INSTALLED BETWEEN THE TRENCH AND ANY DRAINAGE DITCHES OR SWALES.

3. FENCES SHALL ALSO BE INSTALLED AROUND THE STOCKPILED SOILS.

4. THE GEOTEXTILE SHALL BE FREE FROM DEFECTS, TEARS, PUNCTURES, FLAWS, DETERIORATION OR DAMAGE INCURRED DURING MANUFACTURE, TRANSPORTATION, STORAGE, OR INSTALLATION.

5. TIE BACKS SHALL BE PLACED AS REQUIRED.

SILT FENCE
NO SCALE

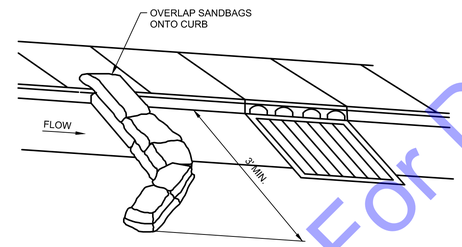

IN PAVED AREAS

SANDBAG DIVERSION AT CURB INLET
NO SCALE

GENERAL EROSION AND SEDIMENT CONTROL NOTES

1. ALL EROSION AND SEDIMENT CONTROL PRACTICES SHALL BE IN ACCORDANCE WITH THE INDIANA STORM WATER QUALITY MANUAL FROM THE INDIANA DEPARTMENT OF ENVIRONMENTAL MANAGEMENT.

2. THE NOTICE OF INTENT (NOI) AND PUBLIC NOTICE FOR THE PROJECT SHALL BE POSTED ON A SIGN INSTALLED AT OR NEAR THE SITE CONSTRUCTION TRAILER. THE NOI SHALL LIST THE CONTACT INFORMATION FOR THE SITE CONTACT PERSON. THE SIGN AND INFORMATION SHALL BE MAINTAINED AND REMAIN LEGIBLE THROUGHOUT CONSTRUCTION.

3. A COPY OF THIS EROSION AND SEDIMENT CONTROL PLAN AND THE EROSION AND SEDIMENT CONTROL REPORT SHALL BE AVAILABLE AT THE PROJECT SITE THROUGHOUT THE ENTIRE CONSTRUCTION PERIOD.

4. THE CONTRACTOR SHALL CONTROL WASTE, GARBAGE, DEBRIS, WASTEWATER, AND OTHER SUBSTANCES ON THE SITE SO THEY WILL NOT BE TRANSPORTED FROM THE SITE BY THE ACTION OF WIND, STORM WATER RUNOFF, OR OTHER FORCES. PROPER DISPOSAL OR MANAGEMENT OF ALL WASTES AND UNUSED BUILDING MATERIAL APPROPRIATE TO THE NATURE OF THE WASTE OR MATERIAL IS REQUIRED.

5. PUBLIC OR PRIVATE ROADWAYS SHALL BE KEPT CLEAR OF ACCUMULATED SEDIMENT. ALL SEDIMENT THAT IS CLEARED MUST BE RETURNED TO THE LIKELY POINT OF ORIGIN OR OTHER SUITABLE LOCATION. CLEARING OF LARGE AMOUNTS OF SEDIMENT SHALL NOT INCLUDE FLUSHING THE AREA WITH WATER.

6. MINIMIZE THE EXPOSURE OF BARE EARTH BY LIMITING THE WORK AREA TO THAT NECESSARY TO PERFORM THE WORK, AND BY PROPER SCHEDULING OF MANPOWER AND EQUIPMENT.

7. ALL EROSION AND SEDIMENT CONTROL MEASURES SHALL BE INSPECTED, CLEANED, AND MAINTAINED FOLLOWING EACH STORM EVENT.

8. WHEREVER POSSIBLE, MAINTAIN EXISTING VEGETATIVE COVER. USE NON-VEGETATIVE MATERIAL INCLUDING MULCH, EROSION BLANKETS, OR STONE TO CONTROL EROSION FROM DISTURBED AREAS.

9. A LOG SHALL BE MAINTAINED OF ALL INSPECTIONS (WEEKLY, AND FOLLOWING STORM EVENTS), MAINTENANCE AND REPAIR OF EROSION AND SEDIMENT CONTROL MEASURES. THE LOG SHALL BE MAINTAINED ON SITE AND BE AVAILABLE UPON REQUEST TO THE OWNERS REPRESENTATIVES AND THE OPERATING AUTHORITIES HAVING JURISDICTION OVER THE SITE.

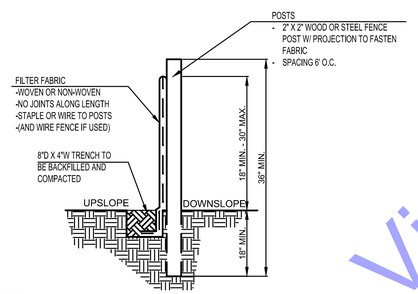

INSTALLATION:
1. THE BOTTOM 1' OF THE FENCE SHALL BE BURIED IN THE TRENCH ON THE UPSLOPE SIDE.
2. FENCE SHALL BE INSTALLED ALONG LEVEL GRADES, NOT ACROSS FLOW CHANNELS.
3. IF OPTIONAL SUPPORT WIRE FENCE IS USED, POST SPACING MAY BE EXTENDED TO 8' O.C.

MAINTENANCE:
1. INSPECT SILT FENCE PERIODICALLY (WEEKLY) AND AFTER EACH STORM EVENT.
2. IF FABRIC IS TORN OR DAMAGED OR IN ANY WAY BECOMES INEFFECTIVE, REPLACE THE AFFECTED PORTION IMMEDIATELY.
3. REMOVE DEPOSITED SEDIMENT WHEN IT REACHES HALF THE HEIGHT OF THE FENCE, OR IT IS CAUSING THE FABRIC TO BULGE.
4. TAKE CARE NOT TO UNDERMINE THE FENCE DURING SEDIMENT REMOVAL.
5. AFTER THE CONTRIBUTING AREA HAS BEEN STABILIZED, REMOVE THE FENCE AND REMAINING SEDIMENT, BRING THE DISTURBED AREA TO GRADE, AND STABILIZE.

SILT FENCE SECTION
NO SCALE

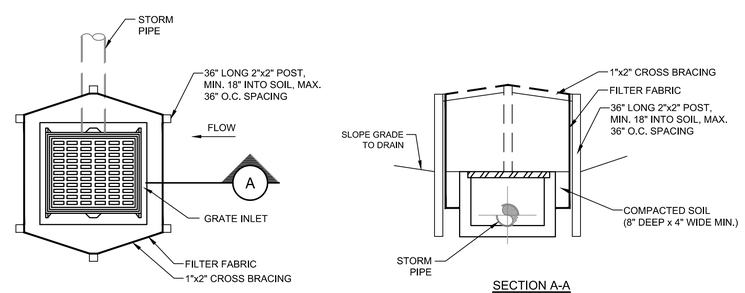

PLAN VIEW

SECTION A-A

STORM INLET WITH SILT FENCE EROSION DETAIL

COMMONWEALTH ENGINEERS, INC.
A wealth of resources to master a common goal.
https://commonwealthengineers.com/
OFFICE LOCATIONS IN:
INDIANAPOLIS, IN. (2)
EVANSVILLE, IN.
FORT WAYNE, IN.
CROWN POINT, IN.
BOWLING GREEN, KY.
SOUTH BEND, IN.

NATALIE M. SCHELLING
REGISTERED No. 12000721 STATE OF INDIANA
PROFESSIONAL ENGINEER

Signature 12/31/2024 Date

TOWN OF CLAYPOOL
KOSCIUSKO COUNTY, INDIANA

CONTRACT C -
STORM SEWER
IMPROVEMENTS

Indiana 811 Know what's below. Call before you dig.
Know what's below. 811 before you dig.
1-800-382-5544 (ITS THE LAW)

No.	Submittal / Revision	By	Date

Designed By:	Drawn By:	Checked By:
BW	CH	NS
Issue Date: 12/2024	Project No: S23130	Scale: AS SHOWN

EROSION CONTROL DETAILS

Drawing No: EC4

Sheet: 21 OF 21

File: Z:\SHARED\IN CLIENTS A-L\CLAYPOOL\S23130 - WASTEWATER - STORMWATER IMPROVEMENTS\06 CAD\A CURRENT FILES\1 DRAWINGS\CONTRACT C\09-CLAYPOOL- MISC DETAILS.DWG
Saved: 4/8/2025 9:57:55 AM Plotted: 4/8/2025 3:45:19 PM Current User: Craig Higbie LastSavedBy: chigbie