SET NO.

TOWN OF OSGOOD
RIPLEY COUNTY, INDIANA

2025 COMMUNITY CROSSINGS MATCHING GRANT (CCMG) ROUND 1 STREET IMPROVEMENTS

MAY 2025

For Public Viewing Only - Not For Downloading

TOWN COUNCIL

CHRISTOPHER KUHN, SR. ..... PRESIDENT
HOLLEY ROSE ..... MEMBER
BILL ROBERTS ..... MEMBER
TAMMY WILHOIT ..... CLERK-TREASURER

LYNN FLEDDERMAN ..... ATTORNEY
STEVE WILHOIT ..... GAS/STREET SUPERINTENDENT
TONY WOOD ..... WASTEWATER/WATER SUPERINTENDENT

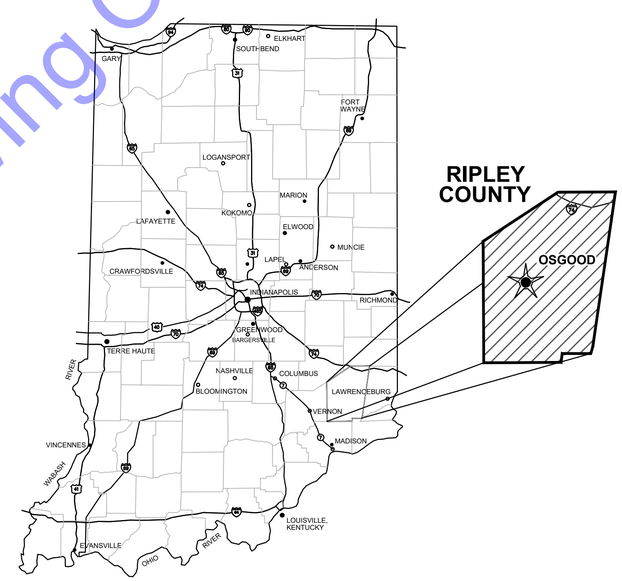

GENERAL LOCATION MAP

COMMONWEALTH™ ENGINEERS, INC.
A wealth of resources to master a common goal.

QA/QC BY : ROBYN MATTHEWS, PE — DATE : 05/01/2025

CERTIFIED BY : JEFF LASHLEE, PE — DATE : 05/01/2025
INDIANA P.E. No. 12200746

JEFF T. LASHLEE REGISTERED No. 12200746 STATE OF INDIANA PROFESSIONAL ENGINEER

CONTRACT NO. : H25019

© 2025 BY COMMONWEALTH ENGINEERS, INC. ALL RIGHTS RESERVED. REPRODUCTION BY ANY METHOD IN WHOLE OR IN PART WITHOUT PERMISSION IS PROHIBITED

File: Z:\SHARED\IN CLIENTS M-Z\OSGOOD\D H25019 2025-R1 CCMG\06 CAD\A CURRENT FILES\01 DRAWINGS\B SHEET FILES\PLAN SHEETS.DWG
Saved: 5/1/2025 11:32:48 AM Plotted: 5/1/2025 11:36:01 AM Current User: Ignacio Veloz, EI LastSavedBy: iveloz

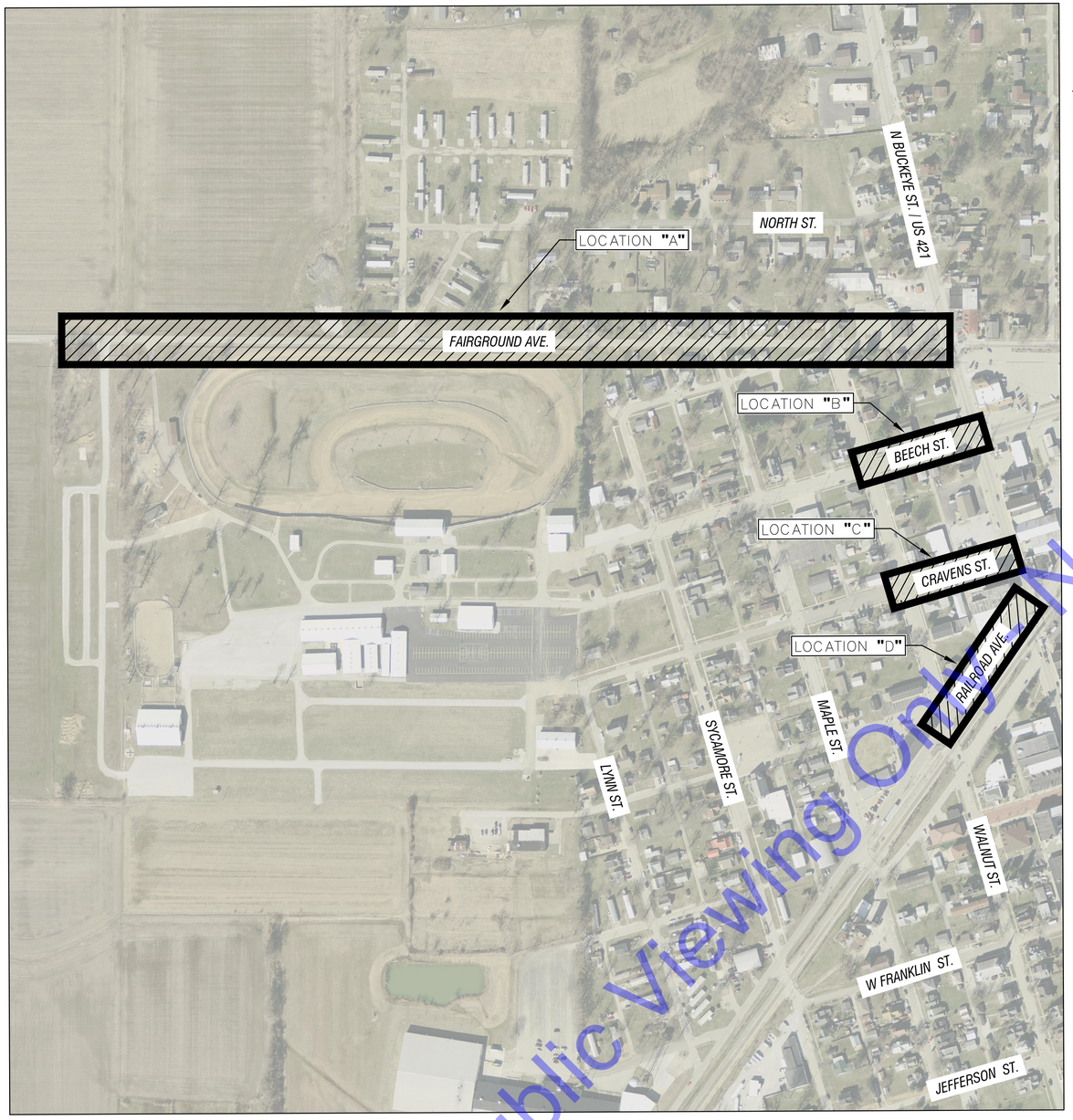

VICINITY MAP

SCALE: 1"=200'-0"

0 200' 400'

DRAWING SET INDEX

SHEET NO.	DRAWING NO.	SHEET TITLE
GENERAL DRAWINGS		
01	G1	TITLE SHEET
02	G2	VICINITY MAP AND DRAWING INDEX
03	G3	GENERAL ABBREVIATIONS, LEGENDS, SYMBOLS, AND NOTES
04	G4	SURVEY DATA
05	G5	QUANTITY SHEET
06	G6	TYPICAL SECTIONS
DEMOLITION AND EROSION CONTROL DRAWINGS		
07	C1-1	DEMOLITION AND EROSION CONTROL PLAN LINE 'A'
08	C1-2	DEMOLITION AND EROSION CONTROL PLAN LINE 'A'
09	C1-3	DEMOLITION AND EROSION CONTROL PLAN LINE 'A'
10	C1-4	DEMOLITION AND EROSION CONTROL PLAN LINE 'B'
11	C1-5	DEMOLITION AND EROSION CONTROL PLAN LINE 'C'
12	C1-6	DEMOLITION AND EROSION CONTROL PLAN LINE 'D'
PLAN AND PLAN DRAWINGS		
13	C2-1	FAIRGROUND AVE PLAN VIEWS - LINE "A"
14	C2-2	FAIRGROUND AVE PLAN VIEWS - LINE "A"
15	C2-3	FAIRGROUND AVE PLAN VIEWS - LINE "A"
16	C2-4	BEECH ST PLAN VIEW - LINE "B"
17	C2-5	CRAVENS ST PLAN VIEW - LINE "C"
18	C2-6	RAILROAD AVE PLAN VIEW - LINE "D"
TRAFFIC CONTROL		
19	TC-1	MAINTENANCE OF TRAFFIC - DETOUR ROUTE FOR FAIRGROUND AVE.
20	TC-2	MAINTENANCE OF TRAFFIC - DETAILS
21	TC-3	MAINTENANCE OF TRAFFIC - DETAILS
CURB RAMP DETAILS		
22	C3-1	FAIRGROUND AVE - CURB RAMP DETAILS
23	C3-2	FAIRGROUND AVE - CURB RAMP DETAILS
24	C3-3	FAIRGROUND AVE - CURB RAMP DETAILS
25	C3-4	BEECH ST - CURB RAMP DETAILS
26	C3-5	CRAVENS ST - CURB RAMP DETAILS
27	C3-6	RAILROAD AVE - CURB RAMP DETAILS
MISCELLANEOUS DETAILS		
28	MD1	MISCELLANEOUS DETAILS
29	MD2	MISCELLANEOUS DETAILS
30	MD3	MISCELLANEOUS DETAILS
31	MD4	MISCELLANEOUS DETAILS
32	MD5	MISCELLANEOUS DETAILS
33	MD6	EROSION CONTROL DETAILS

PROJECT LOCATION INDEX	
A	FAIRGROUND AVE. FROM FAIRGROUND RD. TO BUCKEYE ST. / US 421
B	BEECH ST. FROM WALNUT ST. TO BUCKEYE ST. / US 421
C	CRAVENS ST. FROM WALNUT ST. TO BUCKEYE ST. / US 421
D	RAILROAD AVE. FROM WALNUT ST. TO BUCKEYE ST. / US 421

For Public Viewing Only
Not For Downloading

COMMONWEALTH ENGINEERS, INC.
A wealth of resources to master a common goal.
https://commonwealthengineers.com/
OFFICE LOCATIONS IN:
INDIANAPOLIS, IN. (2)
EVANSVILLE, IN.
FORT WAYNE, IN.
CROWN POINT, IN.
BOWLING GREEN, KY.
SOUTH BEND, IN.

JEFF T. LASALLE
REGISTERED No. 12200746 STATE OF INDIANA
PROFESSIONAL ENGINEER

Signature 5/01/25 Date

TOWN OF OSGOOD
RIPLEY COUNTY, INDIANA

2025 COMMUNITY CROSSINGS MATCHING GRANT (CCMG) ROUND 1 STREET IMPROVEMENTS

© 2025 BY COMMONWEALTH ENGINEERS, INC. ALL RIGHTS RESERVED. REPRODUCTION BY ANY METHOD IN WHOLE OR IN PART WITHOUT PERMISSION IS PROHIBITED

Indiana811 Know what's below. Dig safely.
1-800-382-5544 (ITS THE LAW)

No.	Submittal Revision	By	Date

Designed By:	Drawn By:	Checked By:
ITV	JTL	RLM
Issue Date: 5/01/2025	Project No: H25019	Scale: AS SHOWN

VICINITY MAP AND DRAWING INDEX

Drawing No:
G2

Sheet: 02 OF 33

File: Z:\SHARED\IN CLIENTS M-Z\OSGOOD\D H25019 2025-R1 CCMG\06 CAD\A CURRENT FILES\01 DRAWINGS\B SHEET FILES\PLAN SHEETS.DWG
Saved: 5/1/2025 11:32:48 AM Plotted: 5/1/2025 11:36:26 AM Current User: Ignacio Vasquez, El LastSavedBy: jvasquez

GENERAL ABBREVIATIONS

AADT	AVERAGE ANNUAL DAILY TRAFFIC
ADJ	ADJUSTED
ALUM	ALUMINUM
@	AT
AASHTO	AMERICAN ASSOCIATION OF STATE HIGHWAY AND TRANSPORTATION OFFICIALS
ASTM	AMERICAN SOCIETY FOR TESTING MATERIALS
AVE	AVENUE
AVG	AVERAGE
BC	BOTTOM OF CURB
BLDG	BUILDING
BIT	BITUMINOUS
BM	BENCH MARK
BOT	BOTTOM
BRG	BEARING
CB	CATCH BASIN
CFM	CUBIC FEET PER MINUTE
CL	CENTERLINE
CO	CLEAN OUT
CMP	CORRUGATED METAL PIPE
COL/C	COLUMN
CONC	CONCRETE
COP	COPPER
CJ	CONSTRUCTION JOINT
CR	CURB RAMP
CS	
CY	CUBIC YARD
DIA	DIAMETER
DIM	DIMENSION
DI	DUCTILE IRON PIPE
DS	DOWN SPOUT
DWG	DRAWING
DWS	DETECTABLE WARNING SURFACE
EA	EACH
EFFL	EFFLUENT
EL	ELEVATION
EOP	EDGE OF PAVEMENT
EX,EXIST	EXISTING
EXP JP	EXPANSION JOINT
FD	FLOOR DRAIN
FDN	FOUNDATION
FFE	FINISHED
FH	FIRE HYDRANT
FL	FLOW LINE
FLR	FLOOR
FM	FORCE MAIN
FRP	FIBER REINFORCED PLASTIC
FT	FEET OR FOOT
FTG	FOOTING
GALV	GALVANIZED
GEN	GENERAL
GRD	GROUND OR GRADE
GRET	GUARDRAIL END TREATMENT
HORIZ	HORIZONTAL
HMA	HOT MIX ASPHALT
HP	HORSEPOWER
HWL	HIGH WATER LINE OR LEVEL
IE	INVERT ELEVATION
ID	INSIDE DIAMETER
INL	INLET
INV	INVERT
IP	IRON PIN
LB	POUND
LTG	LIGHTING
MAX	MAXIMUM
ME	MATCH EXISTING
MGD	MILLIONS GALLONS PER DAY
MH	MANHOLE
MIN	MINIMUM, MINUTE
MJ	MECHANICAL JOINT
NG	NATURAL GAS
NIC	NOT IN CONTRACT (BY OTHERS)
NO.	NUMBER
OC	ON CENTER
OD	OUTSIDE DIAMETER
OPP	OPPOSITE
PB	PULL BOX
PCCP	PORTLAND CEMENT CONCRETE PAVEMENT
PSF	POUNDS PER SQUARE FOOT
PSI	POUNDS PER SQUARE INCH
PVC	POLYVINYL CHLORIDE
RAD	RADIUS
RCP	REINFORCED CONCRETE PIPE
REQ'D	REQUIRED
R/W	RIGHT-OF-WAY
SAN	SANITARY
SAS	SANITARY SEWER
SCH	SCHEDULE
SECT	SECTION
SF	SQUARE FEET
SHT	SHEET
SQ	SQUARE
STD	STANDARD
STM	STORM
S STL, SS	STAINLESS STEEL
STL	STEEL
SY	SQUARE YARD
TC	TOP OF CURB
TEMP	TEMPORARY
TS	TURNING SPACE
TWLTL	TWO-WAY LEFT TURN LANE
TYP	TYPICAL
V	VALVE
VAR	VARIES
VERT	VERTICAL
W/	WITH
W/O	WITHOUT
WWF	WELDED WIRE FABRIC
XING	CROSSING

GENERAL NOTES

1. ALL PROPERTY AND RIGHT-OF-WAY LINE INFORMATION SHOWN IN DRAWING SET ARE APPARENT AND SHALL NOT BE DEEMED EXACT LOCATIONS, UNLESS OTHERWISE NOTED. INFORMATION WAS OBTAINED VIA "INDIANA ON-LINE" GIS SHAPE FILES.
2. EXISTING UTILITY INFORMATION SHOWN IN DRAWING SET MEETS "ASCE 36-02" QUALITY LEVEL C, UNLESS OTHERWISE NOTED.

   UTILITY COORDINATION AND PROJECT DIRECTION OF EXISTING SUBSURFACE DATA:

   UTILITY QUALITY LEVEL DESCRIPTIONS

   UTILITY QUALITY A - PRECISE HORIZONTAL AND VERTICAL LOCATION OF UTILITIES OBTAINED BY THE ACTUAL EXPOSURE (OR VERIFICATIONS OF PREVIOUSLY EXPOSED AND SURVEY UTILITIES) AND SUBSEQUENT MEASUREMENT OF SUBSURFACE UTILITIES, USUALLY AT A SPECIFIC POINT. ACCURACY OF LOCATION MATCHES PROJECT SURVEY TOLERANCE.

   UTILITY QUALITY B - INFORMATION OBTAINED THROUGH THE APPLICATION OF APPROPRIATE SURFACE GEOPHYSICAL METHODS TO DETERMINE THE EXISTENCE AND APPROXIMATE HORIZONTAL POSITION OF SUBSURFACE UTILITIES. THE RELIABILITY OF THIS INFORMATION IS SURVEYED TO PROJECT CONTROL AND SUBJECT TO ACCURACY LEVELS OF THE GEOPHYSICAL TOLERANCE DEFINED BY THE PROJECT.

   UTILITY QUALITY C - INFORMATION OBTAINED BY SURVEYING AND PLOTTING VISIBLE ABOVE GROUND UTILITY FEATURES AND CORRELATING QUALITY LEVEL "D" INFORMATION.

   UTILITY QUALITY D - INFORMATION DERIVED FROM EXISTING RECORDS OR VERBAL RECOLLECTIONS.
3. STATIONS AND OFFSETS SHOWN ON ALL MANHOLES, INLETS, ETC. ARE SHOWN FROM CENTER OF STRUCTURE NOT CASTING, UNLESS OTHERWISE NOTED.
4. ALL MANHOLES THAT HAVE PIPE INVERT DIFFERENTIAL OF 2 FEET OR GREATER SHALL BE CONSIDERED A DROP MANHOLE. CONTRACTOR SHALL REFER TO MISCELLANEOUS DETAILS AND DETAILED SPECIFICATIONS FOR MORE INFORMATION.
5. CONTRACTOR SHALL NOTIFY THE ENGINEER IF ANY CONFLICTING INFORMATION BECOMES APPARENT IN THE CONTRACTOR DOCUMENTS AS SOON AS POSSIBLE AND PRIOR TO ANY WORK BEING PERFORMED IN THE VICINITY OF OR RELATIVE TO THE APPARENT CONFLICT SO THAT CLARIFICATION MAY OCCUR PRIOR TO CONSTRUCTION ACTIVITIES.
6. ANY ALTERATIONS TO THESE DRAWINGS, SPECIFICATIONS, AND RECORDS ON FILE SHALL RELIEVE COMMONWEALTH ENGINEERS, INC. OF ANY RESPONSIBILITY OF THE ACCURACY OF THE DRAWINGS.
7. USE CAUTION DURING THE EXECUTION OF WORK TO PREVENT DAMAGE TO FEDERAL, STATE, COUNTY, MUNICIPAL, AND PRIVATE PROPERTY. REPAIR ALL DAMAGES AS A RESULT OF OPERATIONS. REPAIR AND REPLACE DAMAGED ITEMS AT NO ADDITIONAL COST TO THE OWNER. PERFORM ALL REPAIR AND REPLACEMENT WORK TO THE SATISFACTION OF THE PERMITTING AGENCY, THE OWNER, AND THE ENGINEER.
8. COMPLY WITH ALL APPLICABLE PERMITS AND REGULATIONS. APPLICABLE PERMITS ISSUED TO THE OWNER WILL BE MADE AVAILABLE TO THE CONTRACTOR.
9. EXISTING UTILITY LINES TO INDIVIDUAL CUSTOMERS MAY NOT BE SHOWN ON THE DRAWINGS. ASSUME THAT UNDERGROUND SERVICE LINES FOR ALL UTILITIES EXIST TO EACH PROPERTY ALONG THE ROUTE OF PLANNED IMPROVEMENTS. COORDINATE ALL WORK WITH RESPECTIVE UTILITIES.

DRAWING SET LEGEND

- EXISTING GAS LINE
- EXISTING WATER LINE
- EXISTING OVERHEAD ELECTRIC LINE
- EXISTING OVERHEAD UTILITY LINE
- EXISTING UNDERGROUND ELECTRIC
- EXISTING UNDERGROUND TELEPHONE LINE
- EXISTING TELEPHONE LINE
- EXISTING CATV LINE
- EXISTING FIBER OPTIC LINE
- EXISTING SANITARY SEWER
- EXISTING STORM SEWER
- EXISTING CHAINLINK FENCE
- EXISTING DECORATIVE FENCE
- APPARENT RIGHT-OF-WAY
- APPARENT PROPERTY LINE
- EXISTING MAJOR CONTOUR LINE
- EXISTING MINOR CONTOUR LINE
- PROPOSED MAJOR CONTOUR LINE
- PROPOSED MINOR CONTOUR LINE
- PROPOSED WATER LINE
- PROPOSED TOP OF CURB ELEVATION
- PROPOSED GUTTER ELEVATION
- PROPOSED SURFACE ELEVATION
- DIRECTION OF FLOW
- BOLLARD
- LARGE ROCK
- CONTROL POINT
- MONUMENT
- BENCHMARK
- BORE / DRILL HOLE
- MAILBOX
- FLAG POLE
- FENCE POST
- BUSH / HEDGE
- DECIDUOUS TREE
- CONIFEROUS TREE
- SIGN
- UTILITY LOCATE FLAG
- GAS LINE MARKER
- GAS VALVE
- GAS METER
- POWER POLE
- LIGHT POLE
- GUY WIRE
- ELECTRIC PEDESTAL
- ELECTRIC TRANSFORMER
- HAND HOLE BOX
- COMMUNICATION LINE MARKER
- TELE/TV PEDESTAL
- COMMUNICATION MANHOLE
- TRAFFIC MANHOLE
- WATER LINE MARKER
- WATER METER
- VALVE
- IRRIGATION CONTROL VALVE
- FIRE HYDRANT
- EXISTING SANITARY MH
- EXISTING STORM INLET (SQUARE)
- EXISTING STORM INLET (ROUND)
- CLEANOUT
- TYPE III BARRICADE
- CONSTRUCTION SIGN
- AREA OF CONSTRUCTION
- DETOUR ROUTE
- TEMPORARY CONCRETE BARRICADE

For Public Viewing Only - Not For Download

COMMONWEALTH ENGINEERS, INC.
A wealth of resources to master a common goal.
https://commonwealthengineers.com/
OFFICE LOCATIONS IN:
INDIANAPOLIS, IN. (2)
EVANSVILLE, IN.
FORT WAYNE, IN.
CROWN POINT, IN.
BOWLING GREEN, KY.
SOUTH BEND, IN.

JEFF T. LASHLEE REGISTERED No. 12200746 STATE OF INDIANA PROFESSIONAL ENGINEER

Signature 5/01/25 Date

TOWN OF OSGOOD
RIPLEY COUNTY, INDIANA

2025 COMMUNITY CROSSINGS MATCHING GRANT (CCMG) ROUND 1 STREET IMPROVEMENTS

© 2025 BY COMMONWEALTH ENGINEERS, INC.-ALL RIGHTS RESERVED. REPRODUCTION BY ANY METHOD IN WHOLE OR IN PART WITHOUT PERMISSION IS PROHIBITED

Indiana811 Know what's below. Dig safely. 1-800-382-5544 (ITS THE LAW)

No.	Submittal / Revision	By	Date

Designed By:	Drawn By:	Checked By:
ITV	JTL	RLM
Issue Date: 5/01/2025	Project No: H25019	Scale: AS SHOWN

GENERAL ABBREVIATIONS, LEGENDS, SYMBOLS, AND NOTES

Drawing No: **G3**

Sheet: 03 OF 33

File: Z:\SHAREDIN CLIENTS M-Z\OSGOOD\D H25019 2025-R1 CCMG\06 CAD\A CURRENT FILES\01 DRAWINGS\B SHEET FILES\PLAN SHEETS.DWG
Saved: 5/1/2025 11:32:48 AM Plotted: 5/1/2025 11:36:29 AM Current User: Ignacio Veloz, El Last Saved By: ivelez

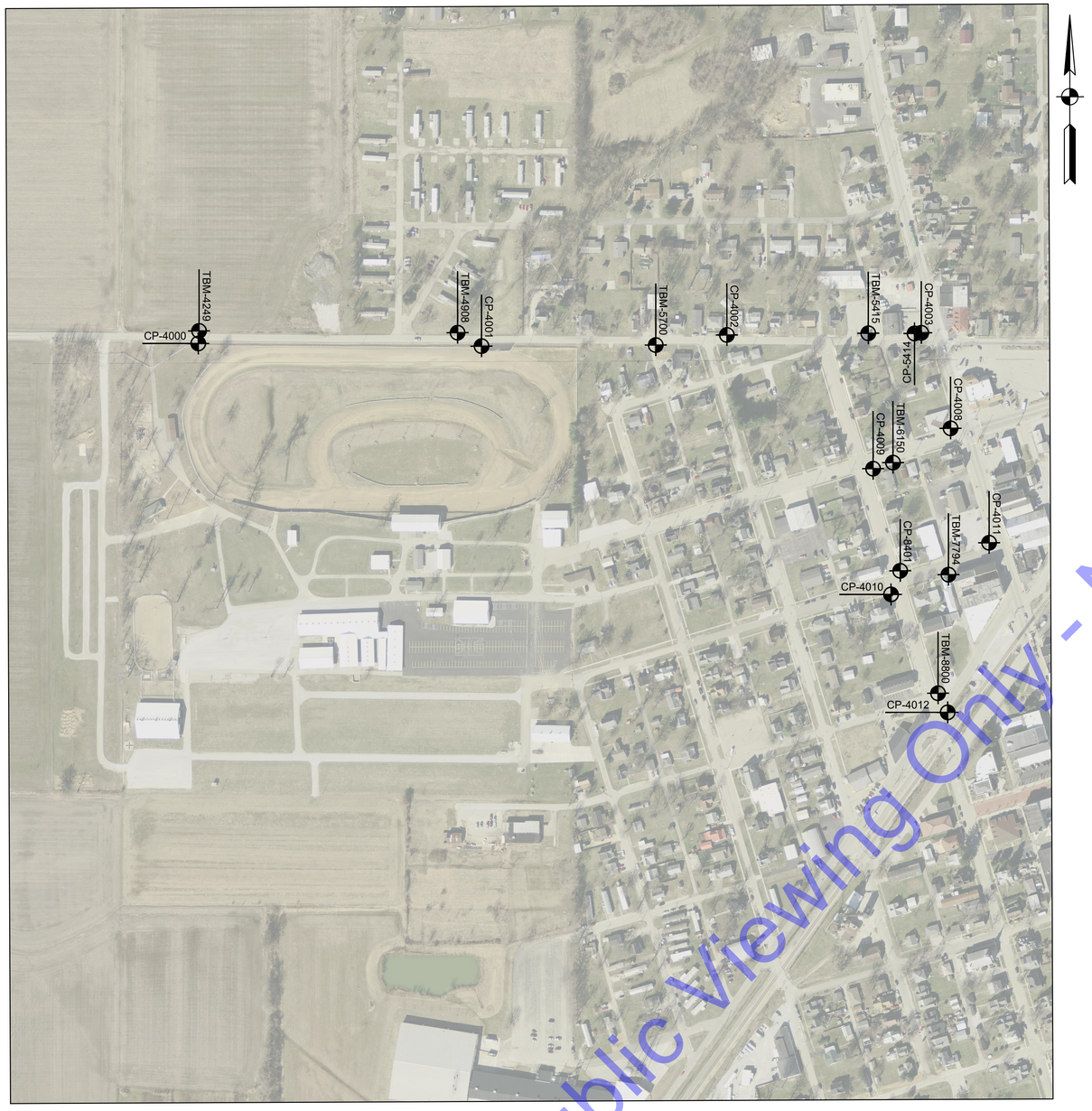

SURVEY DATA

SCALE: 1"=200'-0"

0 200' 400'

CONTROL POINT INFORMATION

IDENTIFIER	NORTHING	EASTING	DESCRIPTION
CP-4003	1415077.4960'	434101.7040'	CAPRBR
CP-5414	1415075.6610'	434081.9580'	TEMP
CP-4002	1415074.3140'	433533.3990'	MAGSPIKE
CP-4001	1415044.8360'	432816.1340'	CAPRBR
CP-4000	1415056.2640'	431988.6680'	CAPRBR
CP-4008	1414798.0220'	434186.1980'	MAGNAIL
CP-4009	1414681.1600'	433959.2560'	CAPRBR
CP-4011	1414463.2910'	434297.0380'	CAPRBR
CP-8401	1414382.7510'	434036.6090'	TEMP
CP-4010	1414314.1880'	434009.2680'	CAPRBR
CP-4012	1413968.3530'	434173.2590'	CAPRBR

TEMPORARY BENCHMARK INFORMATION

IDENTIFIER	ELEVATION	DESCRIPTION
TBM-5415	981.97'	CUT-SQUARE-S-SIDE-LP-CONC-BASE
TBM-5700	983.96'	BT SPK1.0UP-N-SIDE-PP
TBM-4908	984.81'	CUTX-SWBOLT-HYDRANT
TBM-4249	988.06'	BOATSPK1.0UP-SSIDE-PP518141
TBM-6150	979.60'	BTSPK-1.0UP-N-SIDEPP
TBM-7794	982.22'	BTSPK-1.0UP-N-SIDE-PP-518-106
TBM-8800	984.23'	CUT -X-E-BONNET BOLT

Project coordinates are based on the following:
Horizontal - US State plane coordinates: NAD83 (North American Datum) Indiana East Zone (1302)
Vertical - USGS 1988 NAVD (North American Vertical Datum)-per GPS observations (Not verified by physical location of published USGS monuments)

For Public Viewing Only - Not For Downloading

COMMONWEALTH ENGINEERS, INC.
A wealth of resources to master a common goal.
https://commonwealthengineers.com/
OFFICE LOCATIONS IN:
INDIANAPOLIS, IN. (2)
EVANSVILLE, IN.
FORT WAYNE, IN.
CROWN POINT, IN.
BOWLING GREEN, KY.
SOUTH BEND, IN.

JEFF T. LASALLE
REGISTERED
No. 12200746
STATE OF INDIANA
PROFESSIONAL ENGINEER

Signature 5/01/25 Date

TOWN OF OSGOOD
RIPLEY COUNTY, INDIANA

2025 COMMUNITY CROSSINGS MATCHING GRANT (CCMG) ROUND 1 STREET IMPROVEMENTS

© 2025 BY COMMONWEALTH ENGINEERS, INC. ALL RIGHTS RESERVED. REPRODUCTION BY ANY METHOD IN WHOLE OR IN PART WITHOUT PERMISSION IS PROHIBITED

Indiana811
Know what's below. Dig above. Call before you dig.
1-800-382-5544
(ITS THE LAW)

No.	Submittal / Revision	By	Date

Designed By:	Drawn By:	Checked By:
ITV	JTL	RLM
Issue Date: 5/01/2025	Project No: H25019	Scale: AS SHOWN

SURVEY DATA

Drawing No:
G4

Sheet: 04 OF 33

File: Z:\SHAREDIN CLIENTS M-Z\OSGOOD\OSGOOD H25019 2025-R1 CCMG\06 CADA CURRENT FILES\01 DRAWINGS\B SHEET FILES\PLAN SHEETS.DWG
Saved: 5/1/2025 11:32:48 AM Plotted: 5/1/2025 11:37:00 AM Current User: Ignacio Velez, El LastSavedBy: velez

SUMMARY OF QUANTITIES

ITEM #	ITEM	SEE NOTE	INDOT PAY ITEM #	UNIT	RAILROAD AVE. WALNUT ST. TO BUCKEYE ST./US 421	CRAVENS ST. WALNUT ST. TO BUCKEYE ST./US 421	BEECH ST. WALNUT ST. TO BUCKEYE ST./US 421	FAIRGROUND AVE. WALNUT ST. TO BUCKEYE ST./US 421	FAIRGROUND AVE. MAPLE ST. TO WALNUT ST.	FAIRGROUND AVE. FAIRGROUND RD. TO MAPLE ST.	TOTAL
1	CONSTRUCTION ENGINEERING		105-06845	LSUM	LUMP SUM DETERMINED BY SELECTED BID						DOL
2	MOBILIZATION AND DEMOBILIZATION		110-01001	LSUM	LUMP SUM DETERMINED BY SELECTED BID						DOL
3	TREE, 30 IN., REMOVE		201-02260	EACH	0	0	0	0	0	2	2
4	CURB, CONCRETE, REMOVE		202-02278	LFT	185	580	0	80	0	0	845
5	CURB AND GUTTER, REMOVE		202-02279	LFT	80	130	685	0	0	0	895
6	SIDEWALK CONCRETE, REMOVE		202-52710	SYS	100	310	255	30	10	15	720
7	COMMON EXCAVATION		203-02000	CYS	0	0	0	0	90	35	125
8	ASPHALT PAVEMENT EXCAVATION	6		SYS	50	50	50	50	50	50	300
9	EMBANKMENT		203-02055	CYS	0	0	0	0	0	630	630
10	TEMPORARY INLET PROTECTION	5	205-06933	EACH	2	7	8	3	0	8	28
11	TEMPORARY SILT FENCE	5	205-06937	LFT	75	0	0	15	75	685	850
12	CONCRETE WASHOUT			EACH	0	0	0	0	0	1	1
13	STORMWATER MANAGEMENT IMPLEMENTATION	5	205-1616	LSUM	LUMP SUM DETERMINED BY SELECTED BID						DOL
14	COMPACTED AGGREGATE NO. 53		303-01180	TON	145	140	120	140	240	295	1080
15	MILLING, ASPHALT, 1 1/2 IN.		306-08034	SYS	1500	1455	1445	920	785	4145	10250
16	MILLING, APPROACH		306-08432	SYS	130	210	180	105	180	165	970
17	HMA, SURFACE, TYPE B, 9.5 mm		401-XXXXX	TON	160	155	155	120	110	400	1100
18	HMA, BASE, TYPE B, 19.0 mm		401-XXXXX	TON	20	15	3	15	195	172	420
19	ASPHALT WEDGING			TON	3	5	5	5	10	15	43
20	ASPHALT FOR TACK COAT	3	406-05520	SYS	1625	1660	1445	1025	965	4305	11025
21	PCCP, 6 IN., FOR DRIVEWAYS, REMOVE			SYS	0	150	185	18	0	0	353
22	PCCP, 6 IN., FOR DRIVEWAYS		502-06627	SYS	65	145	175	18	0	0	403
23	4' PICKET METAL HANDRAIL, ENAMEL FINISH			LFT	6	0	0	0	0	0	6
24	SIDEWALK CONCRETE		604-06070	SYS	150	290	205	80	160	455	1340
25	CURB RAMP, CONCRETE		604-08086	SYS	25	60	50	15	12	40	202
26	DETECTABLE WARNING SURFACES		604-12083	SYS	9	10	10	3	3	10	45
27	CURB, CONCRETE		605-06120	LFT	350	0	0	0	0	0	350
28	CURB AND GUTTER, CONCRETE		605-06140	LFT	45	700	685	0	0	0	1430
29	CURB, CONCRETE, DEPRESSED		605-90726	LFT	0	0	0	0	380	130	510
30	CURB AND GUTTER, CONCRETE DEPRESSED		605-96305	LFT	260	0	0	490	345	3900	4995
31	HMA FOR APPROACHES, TYPE B, 9.5 mm		610-07487	TON	15	20	20	10	15	25	105
32	RIPRAP, CLASS 1		616-05688	TON	15	15	15	15	15	25	100
33	GEOTEXTILE FOR RIPRAP, TYPE 2A		616-12248	SYS	20	20	20	20	20	30	130
34	EROSION CONTROL BLANKET		621-02770	SYS	35	235	255	65	255	2030	2875
35	MULCHED SEEDING, U		621-06560	SYS	35	235	255	65	255	2030	2875
36	STRUCTURAL BACKFILL			CYS	95	50	12	45	25	28	255
37	PIPE END SECTION, DIAMETER 12 IN.		715-46000	EACH	0	0	0	0	0	1	1
38	PIPE PVC, 8 IN.		715-92537	LFT	170	0	0	0	0	0	170
39	12" RCP			LFT	255	215	35	0	45	120	670
40	15" RCP			LFT	0	0	0	40	40	0	80
41	12" HDPE			LFT	0	0	0	70	85	82	237
42	15" HDPE			LFT	0	0	0	0	0	15	15
43	ADJUST WATER VALVE TO GRADE		715-94530	EACH	3	0	3	0	0	0	6
44	CASTING, MANHOLE, ADJUST TO GRADE		720-12798	EACH	0	0	0	0	0	2	2
45	INLET, TYPE E7		720-45030	EACH	1	0	0	0	0	1	2
46	INLET, TYPE J10		720-45045	EACH	0	2	2	0	0	0	4
47	INLET, TYPE R13		720-45075	EACH	4	0	0	3	3	6	16
48	MANHOLE, TYPE C4		720-45410	EACH	0	2	0	1	0	0	3
49	MANHOLE, TYPE C2		720-90984	EACH	1	0	0	1	2	3	7
50	MANHOLE, TYPE L4		720-93501	EACH	0	0	1	0	0	0	1
51	STORM STRUCTURE, REMOVE			EACH	1	0	0	0	0	0	1
52	MODIFY EXISTING STORM STRUCTURE			EACH	0	0	0	0	0	4	4
53	MODIFY EXISTING SANITARY MANHOLE STRUCTURE			EACH	0	0	0	0	0	1	1
54	UTILITY MODIFICATION DUE TO IMPACTS OF ROAD CONSTRUCTION (ALLOWANCE)		726-00001	DOL	$5,300.00	$5,300.00	$5,300.00	$5,300.00	$5,400.00	$5,400.00	$32,000.00
55	FINAL GRADE		726-02002	LSUM	LUMP SUM DETERMINED BY SELECTED BID						DOL
56	MAINTAINING TRAFFIC		801-06775	LSUM	LUMP SUM DETERMINED BY SELECTED BID						DOL
57	MUTCD SIGNAGE AND POST		802-03821	EACH	0	0	0	0	0	4	4
58	LINE, THERMOPLASTIC, SOLID, WHITE, 4 IN.	4	808-06703	LFT	70	340	360	145	75	0	990
59	TRANSVERSE MARKING, THERMOPLASTIC, STOP LINE, WHITE, 24 IN.	4	808-75297	LFT	50	100	65	25	15	15	270
60	TRANSVERSE MARKING, THERMOPLASTIC, CROSSWALK LINE, WHITE, 6 IN.	4	808-75300	LFT	0	0	0	0	0	160	160
61	PAVEMENT MESSAGE MARKING, THERMOPLASTIC, STOP		808-94435	EACH	2	5	2	2	0	0	11
	MANDATORY ALTERNATE										
MA-1	PIPE LINER, CURED-IN-PLACE, 24 IN.		725-11275	LFT	40	0	0	0	0	0	40

GENERAL NOTES AND SPECIAL PROVISIONS

1. ALL CONTRACTOR QUESTIONS SHOULD BE DIRECTED THROUGH OWNER/MUNICIPALITY AND WILL BE DISTRIBUTED TO ENGINEER.
2. CONTRACTOR SHALL MATCH PROPOSED GRADES WITH EXISTING GRADES FOR PAVEMENT MILLING AREAS.
3. CONTRACTOR SHALL APPLY TACK COAT BETWEEN ASPHALT SURFACES.
4. CONTRACTOR SHALL PLACE EXISTING PAVEMENT MARKINGS AS CLOSE AS POSSIBLE TO CURRENT LOCATION.
5. CONTRACTOR SHALL ADHERE TO INDOT STANDARD SPECIFICATIONS SECTION 205 FOR EROSION CONTROL MEASURES INFORMATION AND IMPLEMENTATION.
6. PAVEMENT THICKNESS IS VARIABLE AND UNKNOWN. CONTRACTOR SHALL ASSUME A THICKNESS OF SIX (6) INCHES FOR BIDDING PURPOSES.

PROJECT CONTACT INFORMATION

STEVE WILHOIT	GAS/STREET SUPERINTENDENT	(812) 689-3839	STEVE@OSGOODINDIANA.ORG
CHRISTOPHER KUHN, SR	TOWN COUNCIL PRESIDENT		CHRIS@OSGOODINDIANA.ORG
TAMMY WILHOIT	CLERK-TREASURER	(812) 689-4240	CLERK@OSGOODINDIANA.ORG

For Public Viewing Only - Not For Downloading

COMMONWEALTH ENGINEERS, INC.
A wealth of resources to master a common goal.
https://commonwealthengineers.com/
OFFICE LOCATIONS IN:
INDIANAPOLIS, IN. (2)
EVANSVILLE, IN.
FORT WAYNE, IN.
CROWN POINT, IN.
BOWLING GREEN, KY.
SOUTH BEND, IN.

JEFF T. LASALLE REGISTERED No. 12200746 STATE OF INDIANA PROFESSIONAL ENGINEER
Signature 5/01/25 Date

TOWN OF OSGOOD
RIPLEY COUNTY, INDIANA
2025 COMMUNITY CROSSINGS MATCHING GRANT (CCMG) ROUND 1 STREET IMPROVEMENTS

© 2025 BY COMMONWEALTH ENGINEERS, INC. ALL RIGHTS RESERVED. REPRODUCTION BY ANY METHOD IN WHOLE OR IN PART WITHOUT PERMISSION IS PROHIBITED

Indiana811 Know what's below. Dig safely. 811 before you dig.
1-800-382-5544 (ITS THE LAW)

No.	Submittal Revision	By	Date

Designed By:	Drawn By:	Checked By:
ITV	JTL	RLM
Issue Date: 5/01/2025	Project No: H25019	Scale: AS SHOWN

QUANTITY SHEET

Drawing No: G5

Sheet: 05 OF 33

File: Z:\SHARED\IN CLIENTS M-Z\OSGOOD\OD H25019 2025-R1 CCMG\06 CAD\A CURRENT FILES\01 DRAWINGS\B SHEET FILES\PLAN SHEETS.DWG
Saved: 5/1/2025 11:32:48 AM Plotted: 5/1/2025 11:37:04 AM Current User: Ignacio Vasquez, El LastSavedBy: vasquez

FAIRGROUND AVE

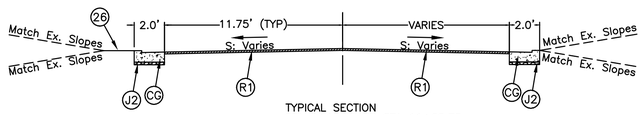

TYPICAL SECTION
STA 0+18.59 TO STA 11+62.75

LINE "A"

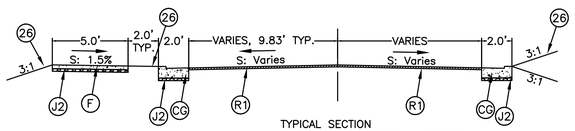

TYPICAL SECTION
STA 11+62.75 TO STA 14+21.70
STA 18+02.11 TO STA 21+84.55

LINE "A"

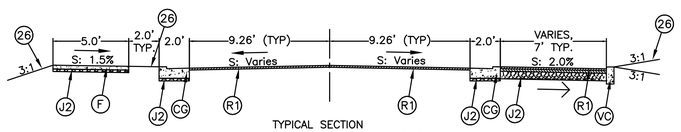

TYPICAL SECTION
STA 14+21.70 TO STA 18+02.11

LINE "A"

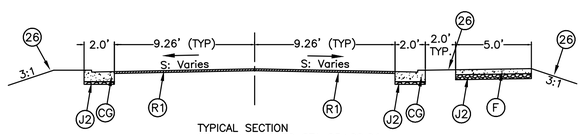

TYPICAL SECTION
STA 22+14.10 TO STA 25+29.04

LINE "A"

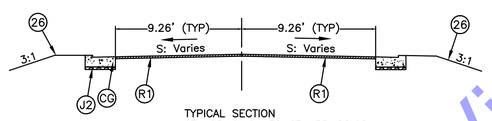

TYPICAL SECTION
STA 25+29.04 TO STA 35+80.25

LINE "A"

BEECH ST

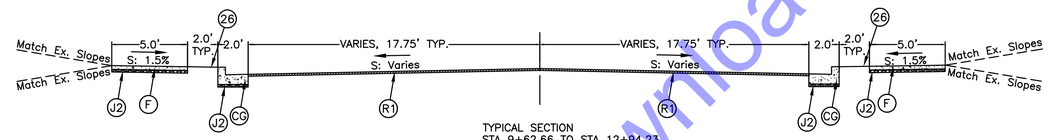

TYPICAL SECTION
STA 9+62.66 TO STA 12+94.23

LINE "B"

CRAVENS ST

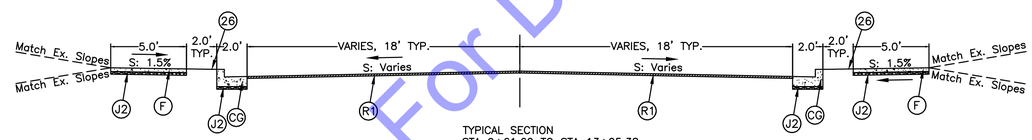

TYPICAL SECTION
STA 9+61.60 TO STA 13+05.38

LINE "C"

RAILROAD AVE

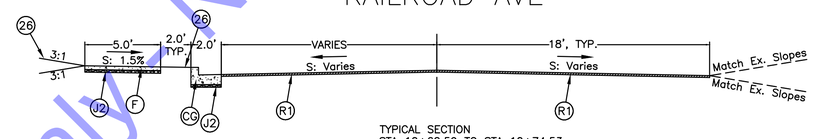

TYPICAL SECTION
STA 10+62.59 TO STA 10+74.53

LINE "D"

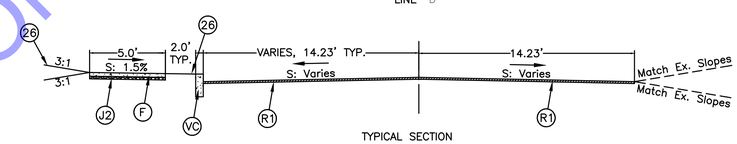

TYPICAL SECTION
STA 10+74.53 TO STA 11+05.31

LINE "D"

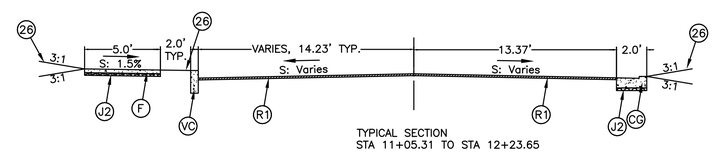

TYPICAL SECTION
STA 11+05.31 TO STA 12+23.65

LINE "D"

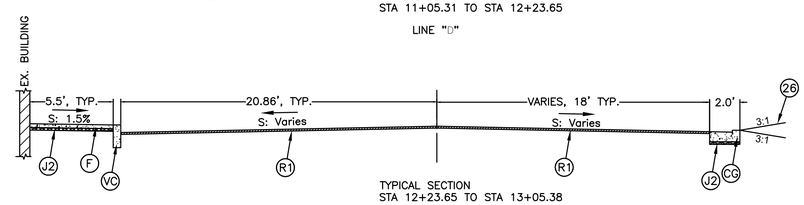

TYPICAL SECTION
STA 12+23.65 TO STA 13+05.38

LINE "D"

LEGEND:

- (R1) ASPHALT, 1.5 IN.
  165 LBS/SYD HMA SURFACE, TYPE "B", 9.5 mm
- (J2) COMPACTED AGGREGATE No. 53
- (CG) CURB AND GUTTER
- (VC) VERTICAL CURB
- (F) CONCRETE SIDEWALK, 4 IN. ON
  2 IN. COMPACTED AGGREGATE No. 53
- (26) SEEDING WITH EROSION CONTROL BLANKET

NOTE:

1. ROADWAY PATCHING AND BEHIND CURB RESTORATION WILL BE NEEDED FOR CURB INSTALLATION. SEE MD-1 FOR ROADWAY PATCHING DETAIL AND SEE C2-1 THRU C2-5 FOR RESTORATION INFORMATION.

HORIZONTAL SCALE: 1" = 5'-0"
0 2.5' 5' 10' 20'

For Public Viewing Only - Not For Downloading

COMMONWEALTH ENGINEERS, INC.
A wealth of resources to master a common goal.
https://commonwealthengineers.com/
OFFICE LOCATIONS IN:
INDIANAPOLIS, IN. (2)
EVANSVILLE, IN.
FORT WAYNE, IN.
CROWN POINT, IN.
BOWLING GREEN, KY.
SOUTH BEND, IN.

JEFF T. LASHLEE
REGISTERED
No. 12200746
STATE OF INDIANA
PROFESSIONAL ENGINEER

Signature 5/01/25 Date

TOWN OF OSGOOD
RIPLEY COUNTY, INDIANA
2025 COMMUNITY CROSSINGS MATCHING GRANT (CCMG) ROUND 1 STREET IMPROVEMENTS

© 2025 BY COMMONWEALTH ENGINEERS, INC. ALL RIGHTS RESERVED. REPRODUCTION BY ANY METHOD IN WHOLE OR IN PART WITHOUT PERMISSION IS PROHIBITED

Indiana811 Know what's below. Dig safely. 811 before you dig.
1-800-382-5544 (IT'S THE LAW)

No.	Submittal / Revision	By	Date

Designed By:	Drawn By:	Checked By:
ITV	JTL	RLM
Issue Date: 5/01/2025	Project No: H25019	Scale: AS SHOWN

TYPICAL SECTIONS

Drawing No:
G6
Sheet: 06 OF 33

File: Z:\SHAREDIN CLIENTS M-Z\OSGOOD\OSGOOD H25019 2025-R1 CCMG\06 CADA\CURRENT FILES\01 DRAWINGS\8 SHEET FILES\PLAN SHEETS.DWG
Saved: 5/1/2025 11:32:48 AM Plotted: 5/1/2025 11:37:24 AM Current User: Ignacio Vasquez, III LastSavedBy: vwilcox

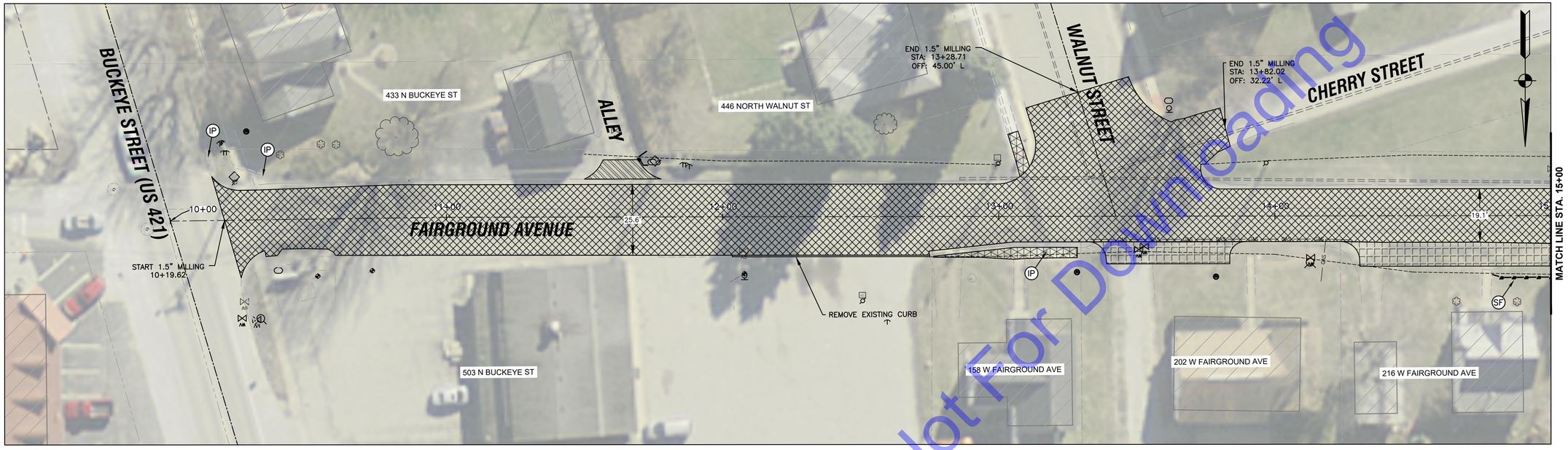

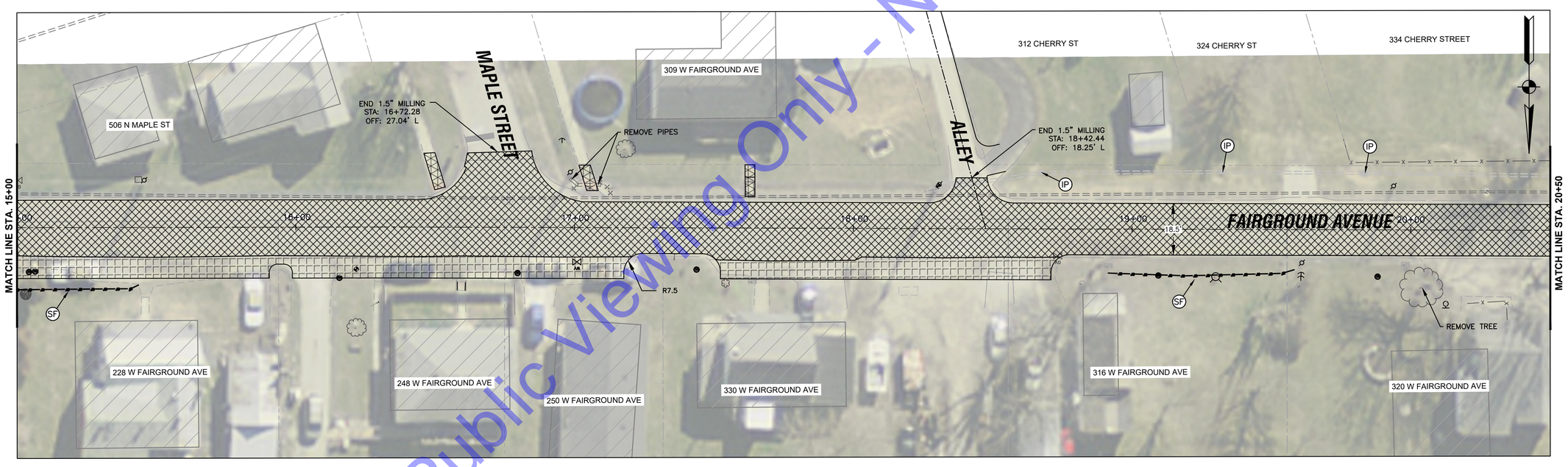

For Public Viewing Only - Not For Downloading

DEMOLITION LEGEND

- 1.5 IN. PAVEMENT MILLING
- ASPHALT REMOVAL
- TOPSOIL STRIPPING & GRADING
- CONCRETE SIDEWALK REMOVAL
- AGGREGATE REMOVAL
- CONCRETE DRIVE ENTRANCE REMOVAL
- CONCRETE CURB RAMP REMOVAL
- GRAVEL DRIVE ENTRANCE REMOVAL

EROSION CONTROL LEGEND

- IP — STORM SEWER INLET PROTECTION
- SF — SILT FENCE

NOTES

1. MAINTAIN ACCESS TO BUSINESSES AND RESIDENCES AT ALL TIMES. IF THIS IS NOT POSSIBLE, CONTRACTOR SHALL COORDINATE ACCESS CLOSURE WITH BUSINESS/RESIDENT.
2. CONTRACTOR SHALL TAKE APPROPRIATE MEASURES TO PROTECT WORK AREAS ADJACENT TO LIVE TRAFFIC.
3. EXISTING PAVEMENT MARKINGS REMOVED BY CONSTRUCTION ACTIVITIES SHALL BE REPLACED AS CLOSE AS POSSIBLE TO EXISTING LOCATION.

HORIZONTAL SCALE: 1" = 20'-0"

0 10' 20' 40' 60'

COMMONWEALTH ENGINEERS, INC.
A wealth of resources to master a common goal.
https://commonwealthengineers.com/
OFFICE LOCATIONS IN:
INDIANAPOLIS, IN. (2)
EVANSVILLE, IN.
FORT WAYNE, IN.
CROWN POINT, IN.
BOWLING GREEN, KY.
SOUTH BEND, IN.

JEFF T. LASALLE
REGISTERED
No. 12200746
STATE OF INDIANA
PROFESSIONAL ENGINEER

Signature 5/01/25 Date

TOWN OF OSGOOD
RIPLEY COUNTY, INDIANA

2025 COMMUNITY CROSSINGS MATCHING GRANT (CCMG) ROUND 1 STREET IMPROVEMENTS

© 2025 BY COMMONWEALTH ENGINEERS, INC. ALL RIGHTS RESERVED. REPRODUCED BY ANY METHOD IN WHOLE OR IN PART WITHOUT PERMISSION IS PROHIBITED

IndianaOne
Know what's below. Dig safe.
1-800-382-5544
(ITS THE LAW)

No.	Submittal / Revision	By	Date

Designed By:	Drawn By:	Checked By:
ITV	JTL	RLM
Issue Date: 5/01/2025	Project No: H25019	Scale: AS SHOWN

DEMOLITION AND EROSION CONTROL PLAN LINE 'A'

Drawing No:
C1-1
Sheet: 07 OF 33

File: Z:\SHARED\IN CLIENTS M-Z\OSGOOD\OSGOOD H25019\2025-R1 CCMG\06 CADA CURRENT FILES\01 DRAWINGS\B SHEET FILES\PLAN SHEETS.DWG
Saved: 5/1/2025 11:32:48 AM Plotted: 5/1/2025 11:37:40 AM Current User: Ignacio Velez, El LastSavedBy: velez

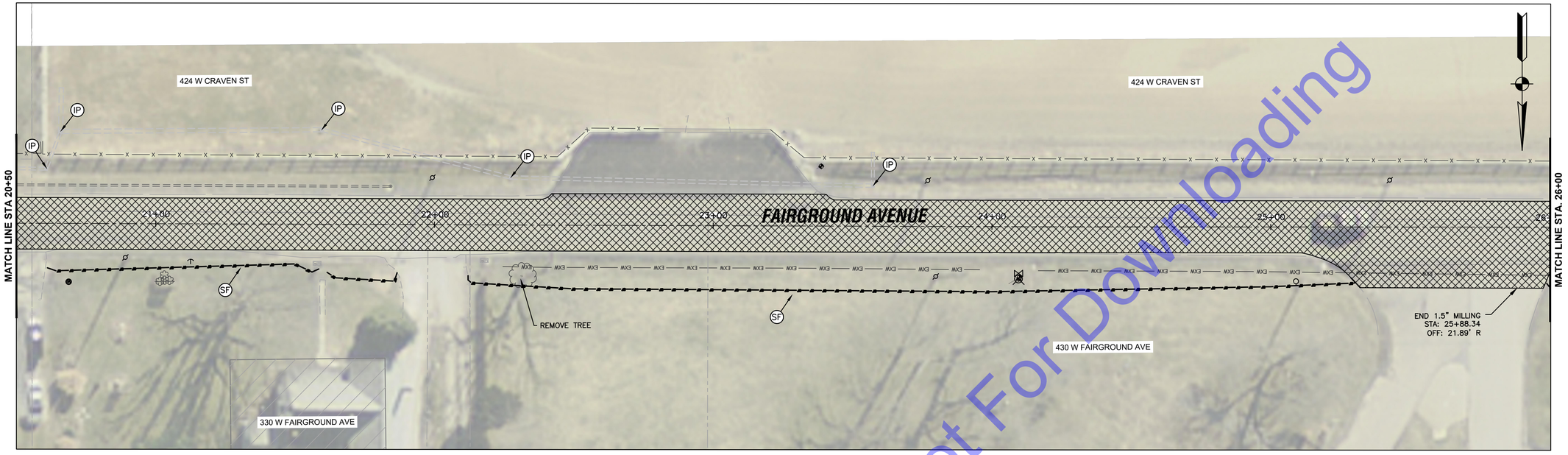

DEMOLITION LEGEND

- 1.5 IN. PAVEMENT MILLING
- ASPHALT REMOVAL
- TOPSOIL STRIPPING & GRADING
- CONCRETE SIDEWALK REMOVAL
- AGGREGATE REMOVAL
- CONCRETE DRIVE ENTRANCE REMOVAL
- CONCRETE CURB RAMP REMOVAL
- GRAVEL DRIVE ENTRANCE REMOVAL

EROSION CONTROL LEGEND

- IP — STORM SEWER INLET PROTECTION
- SF — SILT FENCE

NOTES

1. MAINTAIN ACCESS TO BUSINESSES AND RESIDENCES AT ALL TIMES. IF THIS IS NOT POSSIBLE, CONTRACTOR SHALL COORDINATE ACCESS CLOSURE WITH BUSINESS/RESIDENT.
2. CONTRACTOR SHALL TAKE APPROPRIATE MEASURES TO PROTECT WORK AREAS ADJACENT TO LIVE TRAFFIC.
3. EXISTING PAVEMENT MARKINGS REMOVED BY CONSTRUCTION ACTIVITIES SHALL BE REPLACED AS CLOSE AS POSSIBLE TO EXISTING LOCATION.

HORIZONTAL SCALE: 1" = 20'-0"

0 10' 20' 40' 60'

COMMONWEALTH ENGINEERS, INC.
A wealth of resources to master a common goal.
https://commonwealthengineers.com/
OFFICE LOCATIONS IN:
INDIANAPOLIS, IN. (2)
EVANSVILLE, IN.
FORT WAYNE, IN.
CROWN POINT, IN.
BOWLING GREEN, KY.
SOUTH BEND, IN.

JEFF T. LASALLE
REGISTERED
No. 12200746
STATE OF INDIANA
PROFESSIONAL ENGINEER

Signature 5/01/25 Date

No.	Submittal / Revision	By	Date

Designed By:	Drawn By:	Checked By:
ITV	JTL	RLM
Issue Date: 5/01/2025	Project No: H25019	Scale: AS SHOWN

TOWN OF OSGOOD
RIPLEY COUNTY, INDIANA
2025 COMMUNITY CROSSINGS MATCHING GRANT (CCMG) ROUND 1 STREET IMPROVEMENTS

DEMOLITION AND EROSION CONTROL PLAN LINE 'A'

Drawing No:
C1-2

Sheet: 08 OF 33

© 2025 BY COMMONWEALTH ENGINEERS, INC.-ALL RIGHTS RESERVED. REPRODUCED BY ANY METHOD IN WHOLE OR IN PART WITHOUT PERMISSION IS PROHIBITED

Indiana811 Know what's below. Dig safely.
1-800-382-5544 (ITS THE LAW)

For Public Viewing Only - Not For Downloading

File: Z:\SHAREDIN CLIENTS M:Z\OSGOOD\D H25019 2025-R1 CCMG\06 CAD\A CURRENT FILES\01 DRAWINGS\B SHEET FILES\PLAN SHEETS.DWG
Saved: 5/1/2025 11:32:48 AM Plotted: 5/1/2025 11:37:58 AM Current User: Ignacio Veloz, El Last Saved By: iveloz

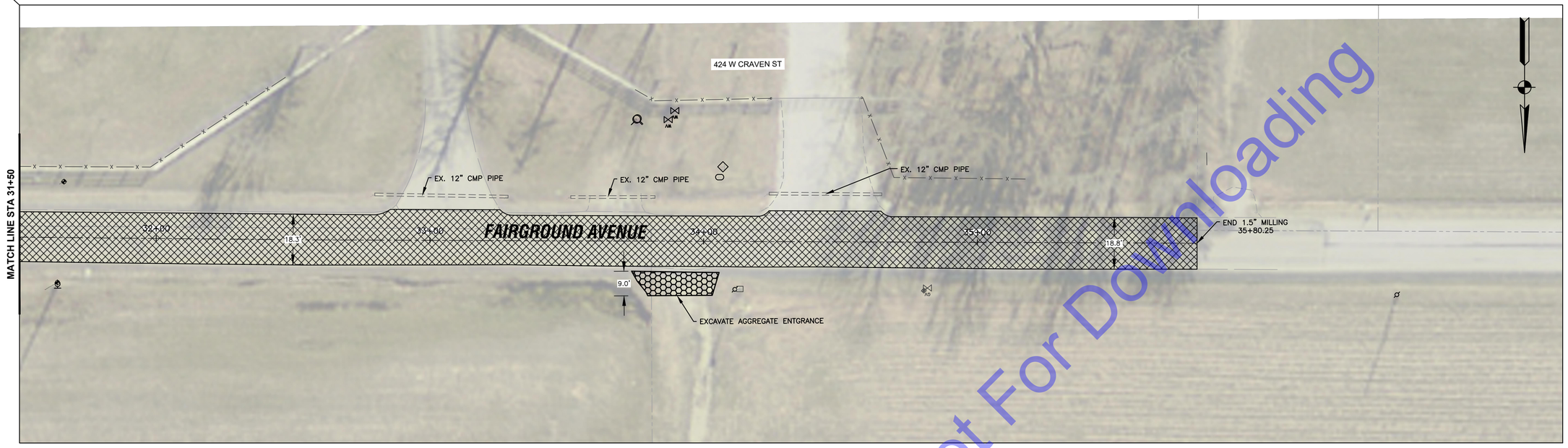

For Public Viewing Only - Not For Downloading

DEMOLITION LEGEND

- 1.5 IN. PAVEMENT MILLING
- ASPHALT REMOVAL
- TOPSOIL STRIPPING & GRADING
- CONCRETE SIDEWALK REMOVAL
- AGGREGATE REMOVAL
- CONCRETE DRIVE ENTRANCE REMOVAL
- CONCRETE CURB RAMP REMOVAL
- GRAVEL DRIVE ENTRANCE REMOVAL

EROSION CONTROL LEGEND

- IP — STORM SEWER INLET PROTECTION
- SF — SILT FENCE

NOTES

1. MAINTAIN ACCESS TO BUSINESSES AND RESIDENCES AT ALL TIMES. IF THIS IS NOT POSSIBLE, CONTRACTOR SHALL COORDINATE ACCESS CLOSURE WITH BUSINESS/RESIDENT.
2. CONTRACTOR SHALL TAKE APPROPRIATE MEASURES TO PROTECT WORK AREAS ADJACENT TO LIVE TRAFFIC.
3. EXISTING PAVEMENT MARKINGS REMOVED BY CONSTRUCTION ACTIVITIES SHALL BE REPLACED AS CLOSE AS POSSIBLE TO EXISTING LOCATION.

HORIZONTAL SCALE: 1" = 20'-0"

0 10' 20' 40' 60'

COMMONWEALTH ENGINEERS, INC.
A wealth of resources to master a common goal.
https://commonwealthengineers.com/
OFFICE LOCATIONS IN:
INDIANAPOLIS, IN. (2)
EVANSVILLE, IN.
FORT WAYNE, IN.
CROWN POINT, IN.
BOWLING GREEN, KY.
SOUTH BEND, IN.

JEFF T. LASALLE
REGISTERED
No. 12200746
STATE OF INDIANA
PROFESSIONAL ENGINEER

Signature 5/01/25 Date

TOWN OF OSGOOD
RIPLEY COUNTY, INDIANA

2025 COMMUNITY CROSSINGS MATCHING GRANT (CCMG) ROUND 1 STREET IMPROVEMENTS

© 2025 BY COMMONWEALTH ENGINEERS, INC.-ALL RIGHTS RESERVED. REPRODUCTION BY ANY METHOD IN WHOLE OR IN PART WITHOUT PERMISSION IS PROHIBITED

Indiana811 Know what's below. Dig safely.
1-800-382-5544 (ITS THE LAW)

No.	Submittal / Revision	By	Date

Designed By:	Drawn By:	Checked By:
ITV	JTL	RLM
Issue Date: 5/01/2025	Project No: H25019	Scale: AS SHOWN

DEMOLITION AND EROSION CONTROL PLAN LINE 'A'

Drawing No:
C1-3

Sheet: 09 OF 33

File: Z:\SHAREDIN CLIENTS M-Z\OSGOOD\D H25019 2025-R1 CCMG\06 CAD\A CURRENT FILES\01 DRAWINGS\B SHEET FILES\PLAN SHEETS.DWG
Saved: 5/1/2025 11:32:48 AM Plotted: 5/1/2025 11:38:11 AM Current User: Ignacio Veloz, El Last Saved By: ivelez

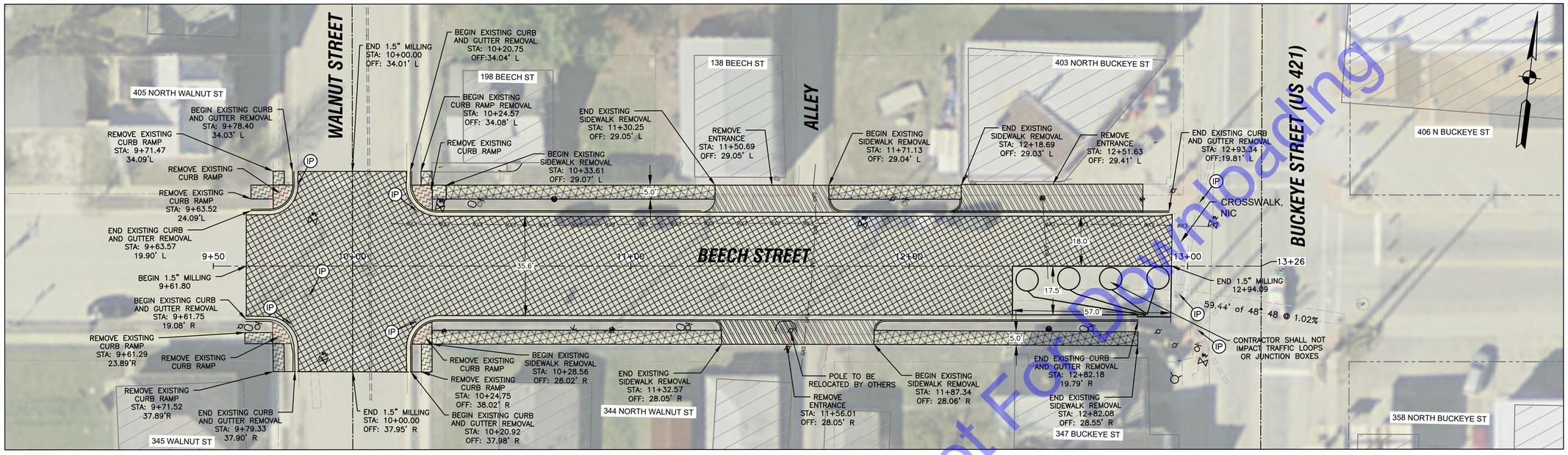

For Public Viewing Only - Not For Bidding

DEMOLITION LEGEND

- 1.5 IN. PAVEMENT MILLING
- ASPHALT REMOVAL
- TOPSOIL STRIPPING & GRADING
- CONCRETE SIDEWALK REMOVAL
- AGGREGATE REMOVAL
- CONCRETE DRIVE ENTRANCE REMOVAL
- CONCRETE CURB RAMP REMOVAL
- GRAVEL DRIVE ENTRANCE REMOVAL

EROSION CONTROL LEGEND

- IP — STORM SEWER INLET PROTECTION
- SF — SILT FENCE

NOTES

1. MAINTAIN ACCESS TO BUSINESSES AND RESIDENCES AT ALL TIMES. IF THIS IS NOT POSSIBLE, CONTRACTOR SHALL COORDINATE ACCESS CLOSURE WITH BUSINESS/RESIDENT.
2. CONTRACTOR SHALL TAKE APPROPRIATE MEASURES TO PROTECT WORK AREAS ADJACENT TO LIVE TRAFFIC.
3. EXISTING PAVEMENT MARKINGS REMOVED BY CONSTRUCTION ACTIVITIES SHALL BE REPLACED AS CLOSE AS POSSIBLE TO EXISTING LOCATION.

HORIZONTAL SCALE: 1" = 20'-0"

0 10' 20' 40' 60'

COMMONWEALTH ENGINEERS, INC.
A wealth of resources to master a common goal.
https://commonwealthengineers.com/
OFFICE LOCATIONS IN:
INDIANAPOLIS, IN. (2)
EVANSVILLE, IN.
FORT WAYNE, IN.
CROWN POINT, IN.
BOWLING GREEN, KY.
SOUTH BEND, IN.

JEFF T. LASHLEE REGISTERED No. 12200746 STATE OF INDIANA PROFESSIONAL ENGINEER

Signature 5/01/25 Date

TOWN OF OSGOOD
RIPLEY COUNTY, INDIANA

2025 COMMUNITY CROSSINGS MATCHING GRANT (CCMG) ROUND 1 STREET IMPROVEMENTS

© 2025 BY COMMONWEALTH ENGINEERS, INC.-ALL RIGHTS RESERVED. REPRODUCTION BY ANY METHOD IN WHOLE OR IN PART WITHOUT PERMISSION IS PROHIBITED

Indiana811 Know what's below. Dig safely.
1-800-382-5544 (ITS THE LAW)

No.	Submittal / Revision	By	Date

Designed By:	Drawn By:	Checked By:
ITV	JTL	RLM
Issue Date: 5/01/2025	Project No: H25019	Scale: AS SHOWN

DEMOLITION AND EROSION CONTROL PLAN LINE 'B'

Drawing No:
C1-4

Sheet: 10 OF 33

File: Z:\SHAREDIN CLIENTS M-Z\OSGOOD\D H25019 2025-R1 CCMG\06 CAD\A CURRENT FILES\01 DRAWINGS\B SHEET FILES\PLAN SHEETS.DWG
Saved: 5/1/2025 11:32:48 AM Plotted: 5/1/2025 11:38:21 AM Current User: Ignacio Veloz, El LastSaved By: ivelez

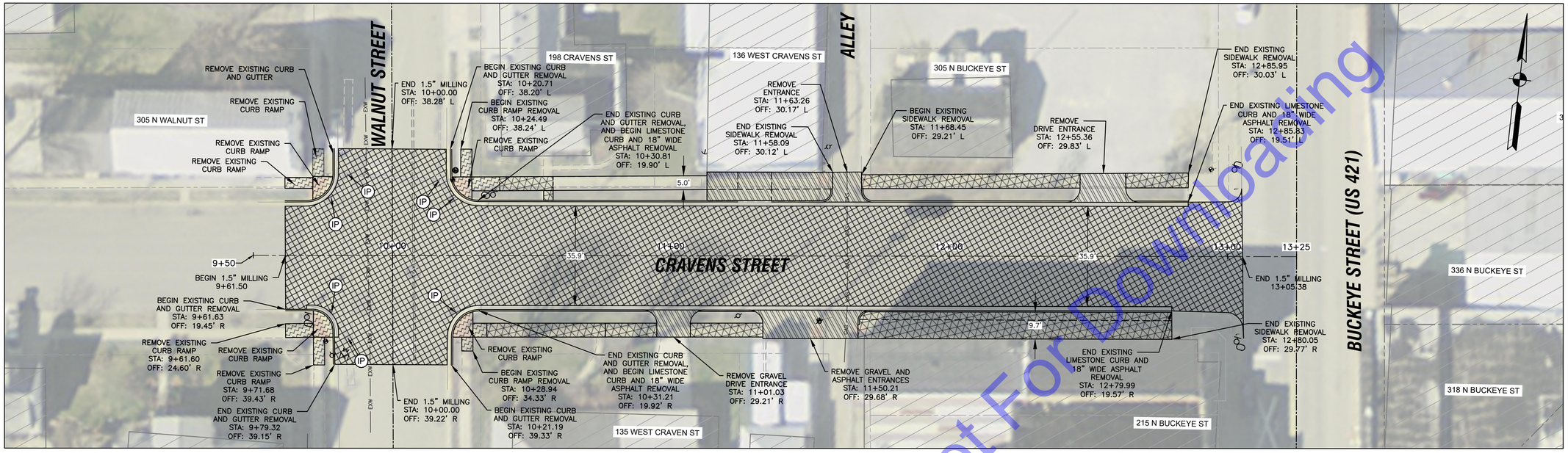

NOTE FOR CRAVENS ST:

1. EXISTING LIMESTONE CURB IS TO BE REMOVED IN WHOLE PIECES AND DELIVERED TO OSGOOD STREET AND GAS.

DEMOLITION LEGEND

- 1.5 IN. PAVEMENT MILLING
- ASPHALT REMOVAL
- TOPSOIL STRIPPING & GRADING
- CONCRETE SIDEWALK REMOVAL
- AGGREGATE REMOVAL
- CONCRETE DRIVE ENTRANCE REMOVAL
- CONCRETE CURB RAMP REMOVAL
- GRAVEL DRIVE ENTRANCE REMOVAL

EROSION CONTROL LEGEND

- IP — STORM SEWER INLET PROTECTION
- SF — SILT FENCE

NOTES

1. MAINTAIN ACCESS TO BUSINESSES AND RESIDENCES AT ALL TIMES. IF THIS IS NOT POSSIBLE, CONTRACTOR SHALL COORDINATE ACCESS CLOSURE WITH BUSINESS/RESIDENT.
2. CONTRACTOR SHALL TAKE APPROPRIATE MEASURES TO PROTECT WORK AREAS ADJACENT TO LIVE TRAFFIC.
3. EXISTING PAVEMENT MARKINGS REMOVED BY CONSTRUCTION ACTIVITIES SHALL BE REPLACED AS CLOSE AS POSSIBLE TO EXISTING LOCATION.

HORIZONTAL SCALE: 1" = 20'-0"

0 10' 20' 40' 60'

For Public Viewing Only - Not For Downloading

COMMONWEALTH ENGINEERS, INC.
A wealth of resources to master a common goal.
https://commonwealthengineers.com/
OFFICE LOCATIONS IN:
INDIANAPOLIS, IN. (2)
EVANSVILLE, IN.
FORT WAYNE, IN.
CROWN POINT, IN.
BOWLING GREEN, KY.
SOUTH BEND, IN.

JEFF T. LASALLE REGISTERED No. 12200746 STATE OF INDIANA PROFESSIONAL ENGINEER

Signature 5/01/25 Date

TOWN OF OSGOOD
RIPLEY COUNTY, INDIANA
2025 COMMUNITY CROSSINGS MATCHING GRANT (CCMG) ROUND 1 STREET IMPROVEMENTS

© 2025 BY COMMONWEALTH ENGINEERS, INC.-ALL RIGHTS RESERVED. REPRODUCTION BY ANY METHOD IN WHOLE OR IN PART WITHOUT PERMISSION IS PROHIBITED

Indiana811 Know what's below. Dig safely.
1-800-382-5544 (ITS THE LAW)

No.	Submittal / Revision	By	Date

Designed By:	Drawn By:	Checked By:
ITV	JTL	RLM
Issue Date: 5/01/2025	Project No: H25019	Scale: AS SHOWN

DEMOLITION AND EROSION CONTROL PLAN LINE 'C'

Drawing No: **C1-5**

Sheet: 11 OF 33

File: Z:\SHAREDIN CLIENTS M:\OSGOOD\D H25019 2025-R1 CCMG\06 CAD\A CURRENT FILES\01 DRAWINGS\B SHEET FILES\PLAN SHEETS.DWG
Saved: 5/1/2025 11:32:48 AM Plotted: 5/1/2025 11:38:30 AM Current User: Ignacio Veloz, El LastSaved By: ivelcz

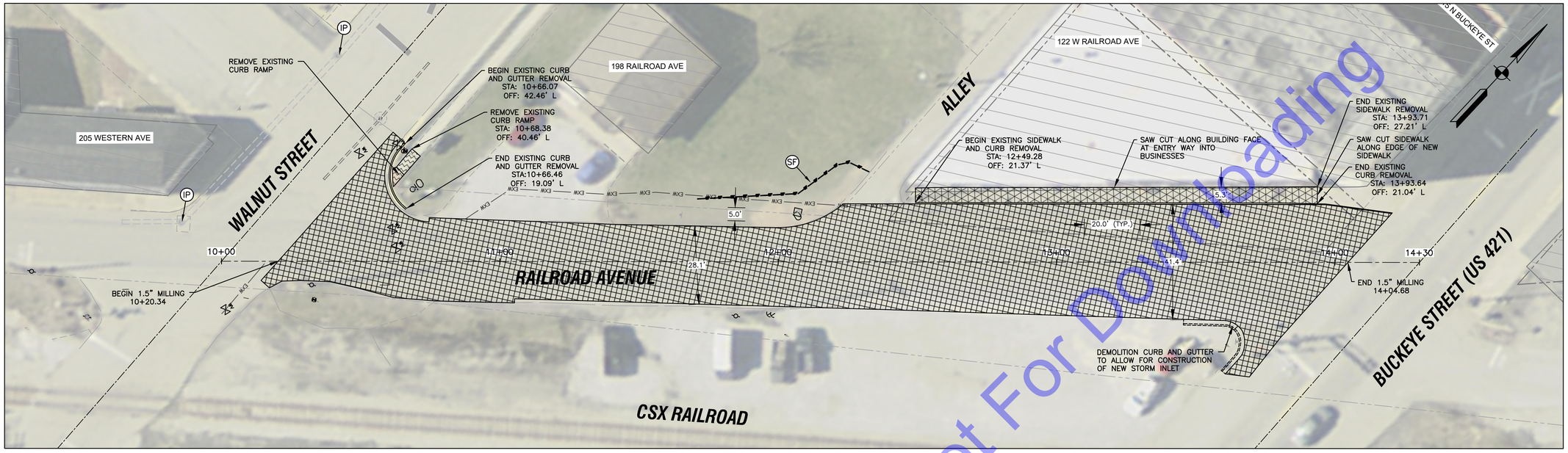

For Public Viewing Only - Not For Downloading

DEMOLITION LEGEND

- 1.5 IN. PAVEMENT MILLING
- ASPHALT REMOVAL
- TOPSOIL STRIPPING & GRADING
- CONCRETE SIDEWALK REMOVAL
- AGGREGATE REMOVAL
- CONCRETE DRIVE ENTRANCE REMOVAL
- CONCRETE CURB RAMP REMOVAL
- GRAVEL DRIVE ENTRANCE REMOVAL

EROSION CONTROL LEGEND

- IP — STORM SEWER INLET PROTECTION
- SF — SILT FENCE

NOTES

1. MAINTAIN ACCESS TO BUSINESSES AND RESIDENCES AT ALL TIMES. IF THIS IS NOT POSSIBLE, CONTRACTOR SHALL COORDINATE ACCESS CLOSURE WITH BUSINESS/RESIDENT.
2. CONTRACTOR SHALL TAKE APPROPRIATE MEASURES TO PROTECT WORK AREAS ADJACENT TO LIVE TRAFFIC.
3. EXISTING PAVEMENT MARKINGS REMOVED BY CONSTRUCTION ACTIVITIES SHALL BE REPLACED AS CLOSE AS POSSIBLE TO EXISTING LOCATION.

HORIZONTAL SCALE: 1" = 20'-0"

0 10' 20' 40' 60'

COMMONWEALTH ENGINEERS, INC.
A wealth of resources to master a common goal.
https://commonwealthengineers.com/
OFFICE LOCATIONS IN:
INDIANAPOLIS, IN. (2)
EVANSVILLE, IN.
FORT WAYNE, IN.
CROWN POINT, IN.
BOWLING GREEN, KY.
SOUTH BEND, IN.

JEFF T. LASALLE REGISTERED No. 12200746 STATE OF INDIANA PROFESSIONAL ENGINEER

Signature 5/01/25 Date

TOWN OF OSGOOD
RIPLEY COUNTY, INDIANA

2025 COMMUNITY CROSSINGS MATCHING GRANT (CCMG) ROUND 1 STREET IMPROVEMENTS

© 2025 BY COMMONWEALTH ENGINEERS, INC.-ALL RIGHTS RESERVED. REPRODUCTION BY ANY METHOD IN WHOLE OR IN PART WITHOUT PERMISSION IS PROHIBITED

Indiana811 Know what's below. Dig safely.
1-800-382-5544 (ITS THE LAW)

No.	Submittal / Revision	By	Date

Designed By:	Drawn By:	Checked By:
ITV	JTL	RLM
Issue Date: 5/01/2025	Project No: H25019	Scale: AS SHOWN

DEMOLITION AND EROSION CONTROL PLAN LINE 'D'

Drawing No:
C1-6

Sheet: 12 OF 33

File: Z:\SHAREDIN CLIENTS M-Z\OSGOOD\D H25019 2025-R1 CCMG\06 CAD\A CURRENT FILES\01 DRAWINGS\B SHEET FILES\PLAN SHEETS.DWG
Saved: 5/1/2025 11:32:48 AM Plotted: 5/1/2025 11:38:42 AM Current User: Ignacio Veloz, El LastSaved By: ivelcz

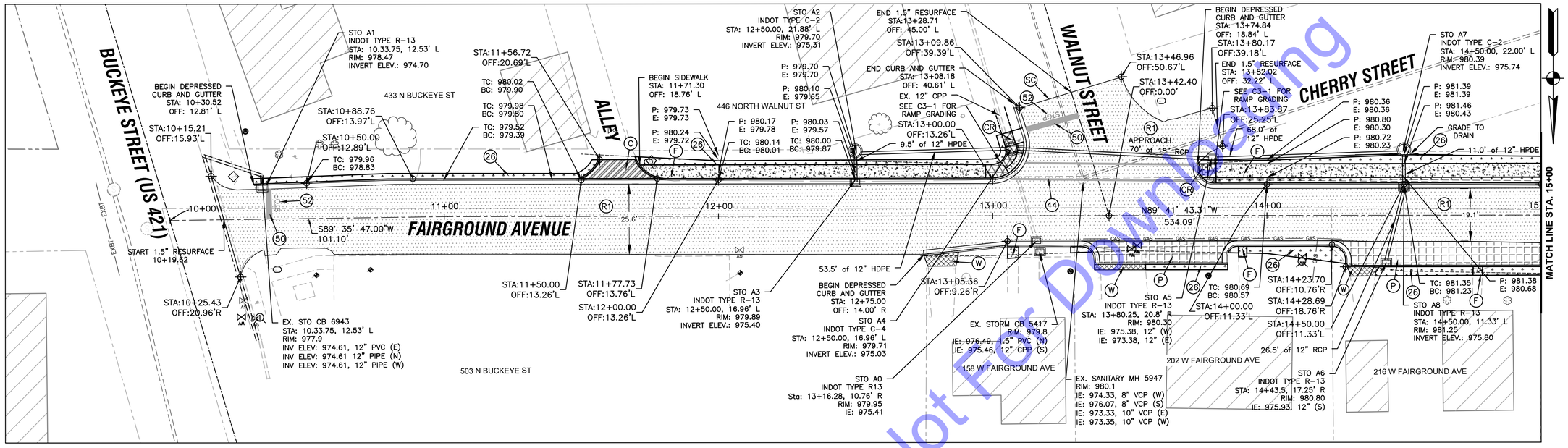

Not For Public Viewing Only

ROAD IMPROVEMENT LEGEND

- R1 — ASPHALT, 1.5 IN. 165 LBS/SYD HMA SURFACE, TYPE "B", 9.5 mm
- A — ASPHALT ENTRANCE, DEPTH VARIES
- J2 — COMPACTED AGGREGATE No. 53
- AT — ASPHALT TURN-OUT
- F — CONCRETE SIDEWALK, 4 IN. ON 2 IN. COMPACTED AGGREGATE No. 53
- C — CONCRETE ENTRANCE, 6" CONC, ON 4" COMPACTED AGGREGATE No. 53, ON COMPACTED SUBGRADE
- CR — CURB RAMP, CONCRETE
- 26 — SEEDING WITH EROSION CONTROL BLANKET
- W — ASPHALT WEDGING
- P — ON-STREET PARKING
- SC — SAW CUT EX. ASPHALT
- D — DETECTABLE WARNING SYSTEM (DWS)

PAVEMENT MARKING LEGEND

- 44 — LINE, THERMOPLASTIC, SOLID, WHITE, 6 IN.
- 46 — TRANSVERSE MARKING, THERMOPLASTIC, CROSSWALK LINE, WHITE, 24 IN.
- 50 — TRANSVERSE MARKINGS, THERMOPLASTIC, SOLID, WHITE, 24 IN. STOP BAR
- 52 — PAVEMENT MESSAGE MARKING, THERMOPLASTIC, STOP

NOTES

1. MAINTAIN ACCESS TO BUSINESSES AND RESIDENCES AT ALL TIMES. IF THIS IS NOT POSSIBLE, CONTRACTOR SHALL COORDINATE ACCESS CLOSURE WITH BUSINESS/RESIDENT.
2. CONTRACTOR SHALL TAKE APPROPRIATE MEASURES TO PROTECT WORK AREAS ADJACENT TO LIVE TRAFFIC.
3. EXISTING PAVEMENT MARKINGS REMOVED BY CONSTRUCTION ACTIVITIES SHALL BE REPLACED AS CLOSE AS POSSIBLE TO EXISTING LOCATION.

HORIZONTAL SCALE: 1" = 20'-0"

0 10' 20' 40' 60'

COMMONWEALTH ENGINEERS, INC.
A wealth of resources to master a common goal.
https://commonwealthengineers.com/
OFFICE LOCATIONS IN:
INDIANAPOLIS, IN. (2)
EVANSVILLE, IN.
FORT WAYNE, IN.
CROWN POINT, IN.
BOWLING GREEN, KY.
SOUTH BEND, IN.

JEFF T. LASHLEE REGISTERED No. 12200746 STATE OF INDIANA PROFESSIONAL ENGINEER

Signature 5/01/25 Date

TOWN OF OSGOOD
RIPLEY COUNTY, INDIANA

2025 COMMUNITY CROSSINGS MATCHING GRANT (CCMG) ROUND 1 STREET IMPROVEMENTS

© 2025 BY COMMONWEALTH ENGINEERS, INC. ALL RIGHTS RESERVED. REPRODUCED BY ANY METHOD IN WHOLE OR IN PART WITHOUT PERMISSION IS PROHIBITED

IndianaOne 1-800-382-5544 (ITS THE LAW)

No.	Submittal / Revision	By	Date

Designed By:	Drawn By:	Checked By:
ITV	JTL	RLM
Issue Date:	Project No:	Scale:
	H25019	AS SHOWN

FAIRGROUND AVE PLAN VIEWS - LINE "A"

Drawing No: C2-1

Sheet: 13 OF 33

File: Z:\SHARED\IN CLIENTS M-Z\OSGOOD\OSGOOD H25019\2025-R1 CCMG\06 CAD\A CURRENT FILES\01 DRAWINGS\B SHEET FILES\PLAN SHEETS.DWG
Saved: 5/1/2025 11:32:48 AM Plotted: 5/1/2025 11:48:59 AM Current User: Ignacio Velez, EI LastSavedBy: velez

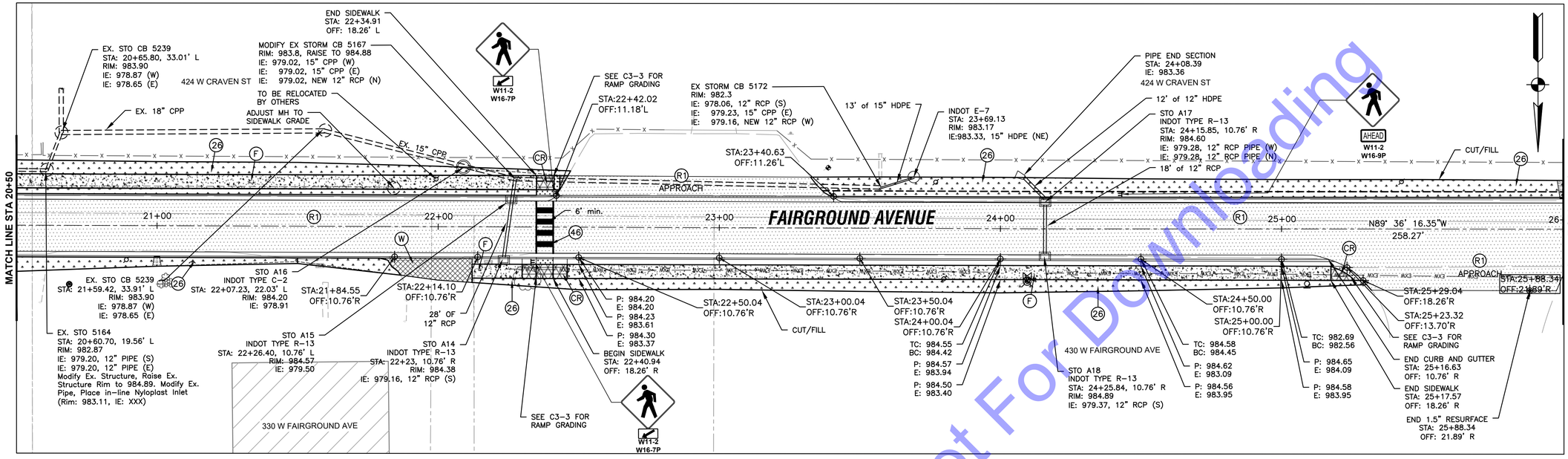

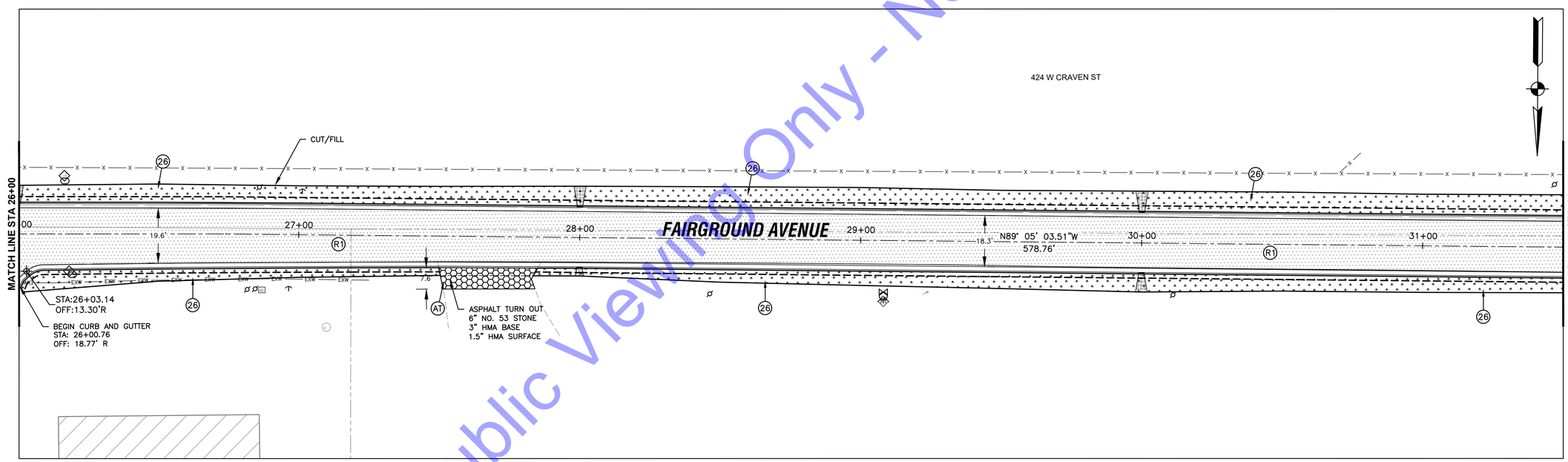

ROAD IMPROVEMENT LEGEND

- (R1) ASPHALT, 1.5 IN. 165 LBS/SYD HMA SURFACE, TYPE "B", 9.5 mm
- (A) ASPHALT ENTRANCE, DEPTH VARIES
- (J2) COMPACTED AGGREGATE No. 53
- (AT) ASPHALT TURN-OUT
- (F) CONCRETE SIDEWALK, 4 IN. ON 2 IN. COMPACTED AGGREGATE No. 53
- (C) CONCRETE ENTRANCE, 6" CONC, ON 4" COMPACTED AGGREGATE No. 53, ON COMPACTED SUBGRADE
- (CR) CURB RAMP, CONCRETE
- (26) SEEDING WITH EROSION CONTROL BLANKET
- (W) ASPHALT WEDGING
- (P) ON-STREET PARKING
- (SC) SAW CUT EX. ASPHALT
- (D) DETECTABLE WARNING SYSTEM (DWS)

PAVEMENT MARKING LEGEND

- (44) LINE, THERMOPLASTIC, SOLID, WHITE, 6 IN.
- (46) TRANSVERSE MARKING, THERMOPLASTIC, CROSSWALK LINE, WHITE, 24 IN.
- (50) TRANSVERSE MARKINGS, THERMOPLASTIC, SOLID, WHITE, 24 IN. STOP BAR
- (52) PAVEMENT MESSAGE MARKING, THERMOPLASTIC, STOP

NOTES

1. MAINTAIN ACCESS TO BUSINESSES AND RESIDENCES AT ALL TIMES. IF THIS IS NOT POSSIBLE, CONTRACTOR SHALL COORDINATE ACCESS CLOSURE WITH BUSINESS/RESIDENT.
2. CONTRACTOR SHALL TAKE APPROPRIATE MEASURES TO PROTECT WORK AREAS ADJACENT TO LIVE TRAFFIC.
3. EXISTING PAVEMENT MARKINGS REMOVED BY CONSTRUCTION ACTIVITIES SHALL BE REPLACED AS CLOSE AS POSSIBLE TO EXISTING LOCATION.

HORIZONTAL SCALE: 1" = 20'-0"

0 10' 20' 40' 60'

COMMONWEALTH ENGINEERS, INC.
A wealth of resources to master a common goal.
https://commonwealthengineers.com/
OFFICE LOCATIONS IN:
INDIANAPOLIS, IN. (2)
EVANSVILLE, IN.
FORT WAYNE, IN.
CROWN POINT, IN.
BOWLING GREEN, KY.
SOUTH BEND, IN.

JEFF T. LASALLE REGISTERED No. 12200746 STATE OF INDIANA PROFESSIONAL ENGINEER

Signature 5/01/25 Date

TOWN OF OSGOOD
RIPLEY COUNTY, INDIANA

2025 COMMUNITY CROSSINGS MATCHING GRANT (CCMG) ROUND 1 STREET IMPROVEMENTS

© 2025 BY COMMONWEALTH ENGINEERS, INC.-ALL RIGHTS RESERVED-REPRODUCED BY ANY METHOD IN WHOLE OR IN PART WITHOUT PERMISSION IS PROHIBITED

Indiana811 Know what's below. Dig below. Stay safe.
1-800-382-5544 (ITS THE LAW)

No.	Submittal / Revision	By	Date

Designed By:	Drawn By:	Checked By:
ITV	JTL	RLM
Issue Date: 5/01/2025	Project No: H25019	Scale: AS SHOWN

FAIRGROUND AVE PLAN VIEWS - LINE "A"

Drawing No:
C2-2
Sheet: 14 OF 33

For Public Viewing Only - Not For Downloading

File: Z:\SHAREDIN CLIENTS M-Z\OSGOOD\H25019 2025-R1 CCMG\06 CAD\A CURRENT FILES\01 DRAWINGS\B SHEET FILES\PLAN SHEETS.DWG
Saved: 5/1/2025 11:32:48 AM Plotted: 5/1/2025 11:36:10 AM Current User: Ignacio Veloz, El LastSaved By: ivelcz

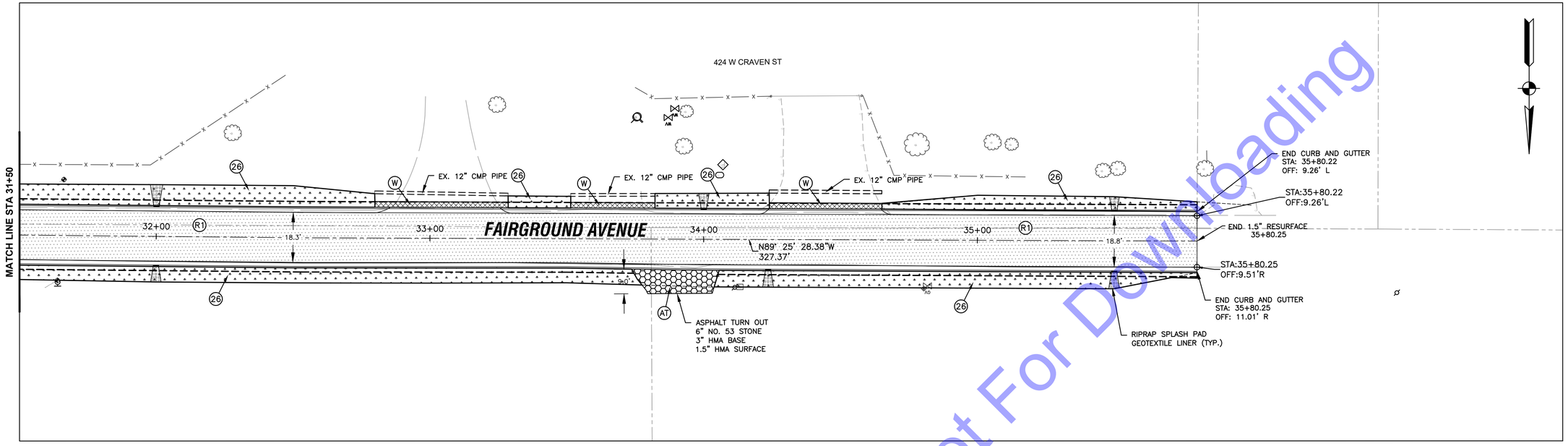

For Public Viewing Only - Not For Downloading

ROAD IMPROVEMENT LEGEND

- R1 — ASPHALT, 1.5 IN. 165 LBS/SYD HMA SURFACE, TYPE "B", 9.5 mm
- A — ASPHALT ENTRANCE, DEPTH VARIES
- J2 — COMPACTED AGGREGATE No. 53
- AT — ASPHALT TURN-OUT
- F — CONCRETE SIDEWALK, 4 IN. ON 2 IN. COMPACTED AGGREGATE No. 53
- C — CONCRETE ENTRANCE, 6" CONC, ON 4" COMPACTED AGGREGATE No. 53, ON COMPACTED SUBGRADE
- CR — CURB RAMP, CONCRETE
- 26 — SEEDING WITH EROSION CONTROL BLANKET
- W — ASPHALT WEDGING
- P — ON-STREET PARKING
- SC — SAW CUT EX. ASPHALT
- D — DETECTABLE WARNING SYSTEM (DWS)

PAVEMENT MARKING LEGEND

- 44 — LINE, THERMOPLASTIC, SOLID, WHITE, 6 IN.
- 46 — TRANSVERSE MARKING, THERMOPLASTIC, CROSSWALK LINE, WHITE, 24 IN.
- 50 — TRANSVERSE MARKINGS, THERMOPLASTIC, SOLID, WHITE, 24 IN. STOP BAR
- 52 — PAVEMENT MESSAGE MARKING, THERMOPLASTIC, STOP

NOTES

1. MAINTAIN ACCESS TO BUSINESSES AND RESIDENCES AT ALL TIMES. IF THIS IS NOT POSSIBLE, CONTRACTOR SHALL COORDINATE ACCESS CLOSURE WITH BUSINESS/RESIDENT.
2. CONTRACTOR SHALL TAKE APPROPRIATE MEASURES TO PROTECT WORK AREAS ADJACENT TO LIVE TRAFFIC.
3. EXISTING PAVEMENT MARKINGS REMOVED BY CONSTRUCTION ACTIVITIES SHALL BE REPLACED AS CLOSE AS POSSIBLE TO EXISTING LOCATION.

HORIZONTAL SCALE: 1" = 20'-0"

0 10' 20' 40' 60'

COMMONWEALTH ENGINEERS, INC.
A wealth of resources to master a common goal.
https://commonwealthengineers.com/
OFFICE LOCATIONS IN:
INDIANAPOLIS, IN. (2)
EVANSVILLE, IN.
FORT WAYNE, IN.
CROWN POINT, IN.
BOWLING GREEN, KY.
SOUTH BEND, IN.

JEFF T. LASALLE REGISTERED No. 12200746 STATE OF INDIANA PROFESSIONAL ENGINEER

Signature 5/01/25 Date

TOWN OF OSGOOD
RIPLEY COUNTY, INDIANA

2025 COMMUNITY CROSSINGS MATCHING GRANT (CCMG) ROUND 1 STREET IMPROVEMENTS

© 2025 BY COMMONWEALTH ENGINEERS, INC.-ALL RIGHTS RESERVED. REPRODUCTION BY ANY METHOD IN WHOLE OR IN PART WITHOUT PERMISSION IS PROHIBITED

Indiana811 Know what's below. Dig safely. 1-800-382-5544 (IT'S THE LAW)

No.	Submittal / Revision	By	Date

Designed By:	Drawn By:	Checked By:
ITV	JTL	RLM
Issue Date: 5/01/2025	Project No: H25019	Scale: AS SHOWN

FAIRGROUND AVE PLAN VIEWS - LINE "A"

Drawing No: C2-3

Sheet: 15 OF 33

File: Z:\SHAREDIN CLIENTS M:\OSGOOD\H25019 2025-R1 CCMG\06 CAD\A CURRENT FILES\01 DRAWINGS\B SHEET FILES\PLAN SHEETS.DWG
Saved: 5/1/2025 11:32:48 AM Plotted: 5/1/2025 11:39:31 AM Current User: Ignacio Veloz, El LastSaved By: ivelez

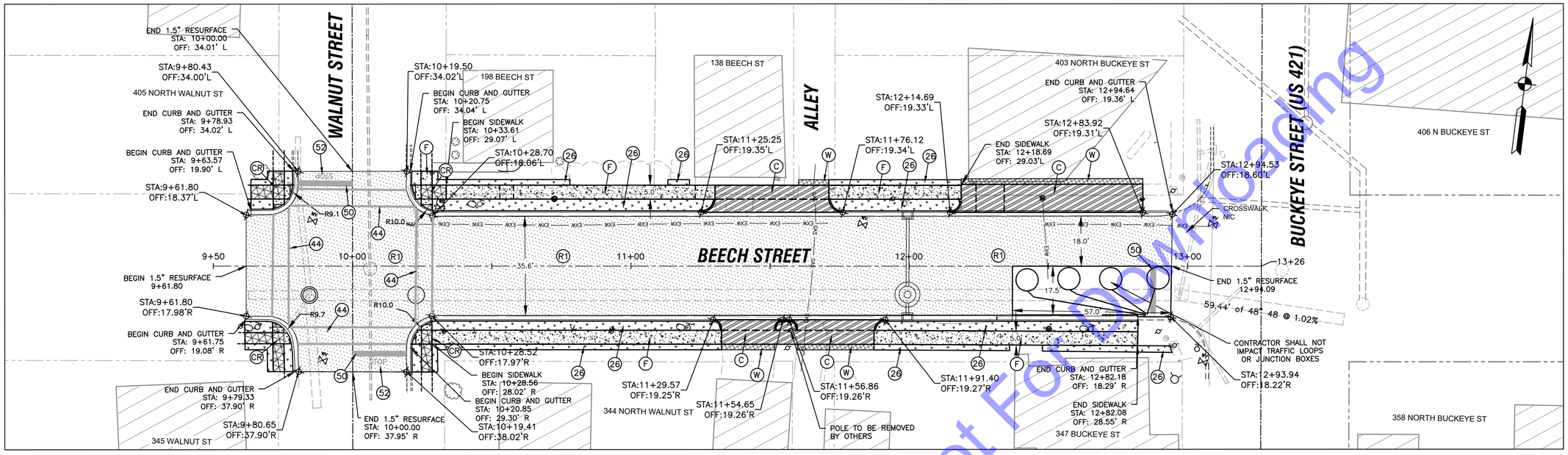

LAYOUT PLAN

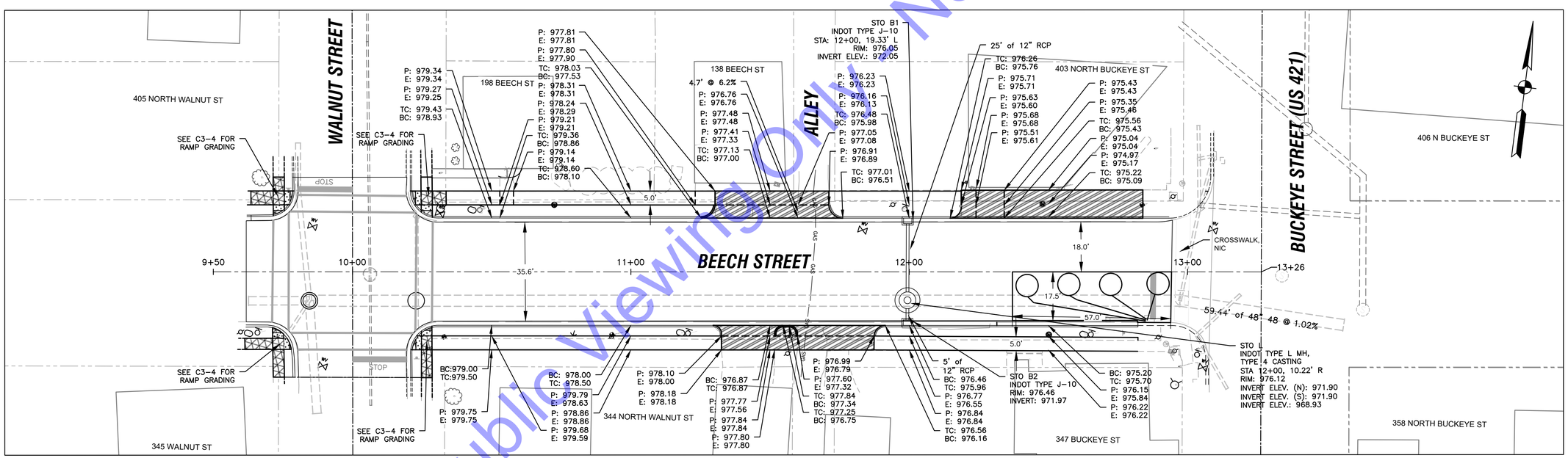

GRADING AND DRAINAGE PLAN

ROAD IMPROVEMENT LEGEND

- (R1) ASPHALT, 1.5 IN. 165 LBS/SYD HMA SURFACE, TYPE "B", 9.5 mm
- (A) ASPHALT ENTRANCE, DEPTH VARIES
- (J2) COMPACTED AGGREGATE No. 53
- (AT) ASPHALT TURN-OUT
- (F) CONCRETE SIDEWALK, 4 IN. ON 2 IN. COMPACTED AGGREGATE No. 53
- (C) CONCRETE ENTRANCE, 6" CONC, ON 4" COMPACTED AGGREGATE No. 53, ON COMPACTED SUBGRADE
- (CR) CURB RAMP, CONCRETE
- (26) SEEDING WITH EROSION CONTROL BLANKET
- (W) ASPHALT WEDGING
- (P) ON-STREET PARKING
- (SC) SAW CUT EX. ASPHALT
- (D) DETECTABLE WARNING SYSTEM (DWS)

PAVEMENT MARKING LEGEND

- (44) LINE, THERMOPLASTIC, SOLID, WHITE, 6 IN.
- (46) TRANSVERSE MARKING, THERMOPLASTIC, CROSSWALK LINE, WHITE, 24 IN.
- (50) TRANSVERSE MARKINGS, THERMOPLASTIC, SOLID, WHITE, 24 IN. STOP BAR
- (52) PAVEMENT MESSAGE MARKING, THERMOPLASTIC, STOP

NOTES

1. MAINTAIN ACCESS TO BUSINESSES AND RESIDENCES AT ALL TIMES. IF THIS IS NOT POSSIBLE, CONTRACTOR SHALL COORDINATE ACCESS CLOSURE WITH BUSINESS/RESIDENT.
2. CONTRACTOR SHALL TAKE APPROPRIATE MEASURES TO PROTECT WORK AREAS ADJACENT TO LIVE TRAFFIC.
3. EXISTING PAVEMENT MARKINGS REMOVED BY CONSTRUCTION ACTIVITIES SHALL BE REPLACED AS CLOSE AS POSSIBLE TO EXISTING LOCATION.

HORIZONTAL SCALE: 1" = 20'-0"

0 10' 20' 40' 60'

For Public Viewing Only - Not For Downloading

COMMONWEALTH ENGINEERS, INC.
A wealth of resources to master a common goal.
https://commonwealthengineers.com/
OFFICE LOCATIONS IN:
INDIANAPOLIS, IN. (2)
EVANSVILLE, IN.
FORT WAYNE, IN.
CROWN POINT, IN.
BOWLING GREEN, KY.
SOUTH BEND, IN.

JEFF T. LASALLE REGISTERED No. 12200746 STATE OF INDIANA PROFESSIONAL ENGINEER

Signature 5/01/25 Date

TOWN OF OSGOOD
RIPLEY COUNTY, INDIANA
2025 COMMUNITY CROSSINGS MATCHING GRANT (CCMG) ROUND 1 STREET IMPROVEMENTS

© 2025 BY COMMONWEALTH ENGINEERS, INC.-ALL RIGHTS RESERVED. REPRODUCTION BY ANY METHOD IN WHOLE OR IN PART WITHOUT PERMISSION IS PROHIBITED

Indiana811 Know what's below. Call before you dig. 1-800-382-5544 (ITS THE LAW)

No.	Submittal / Revision	By	Date

Designed By:	Drawn By:	Checked By:
ITV	JTL	RLM
Issue Date: 5/01/2025	Project No: H25019	Scale: AS SHOWN

BEECH ST PLAN VIEW - LINE "B"

Drawing No: C2-4

Sheet: 16 OF 33

File: Z:\SHREDIN CLIENTS M-Z\OSGOOD\H25019 2025-R1 CCMG\06 CAD\A CURRENT FILES\01 DRAWINGS\B SHEET FILES\PLAN SHEETS.DWG
Saved: 5/1/2025 11:32:48 AM Plotted: 5/1/2025 11:40:11 AM Current User: Ignacio Veloz, El LastSaved By: ivelcz

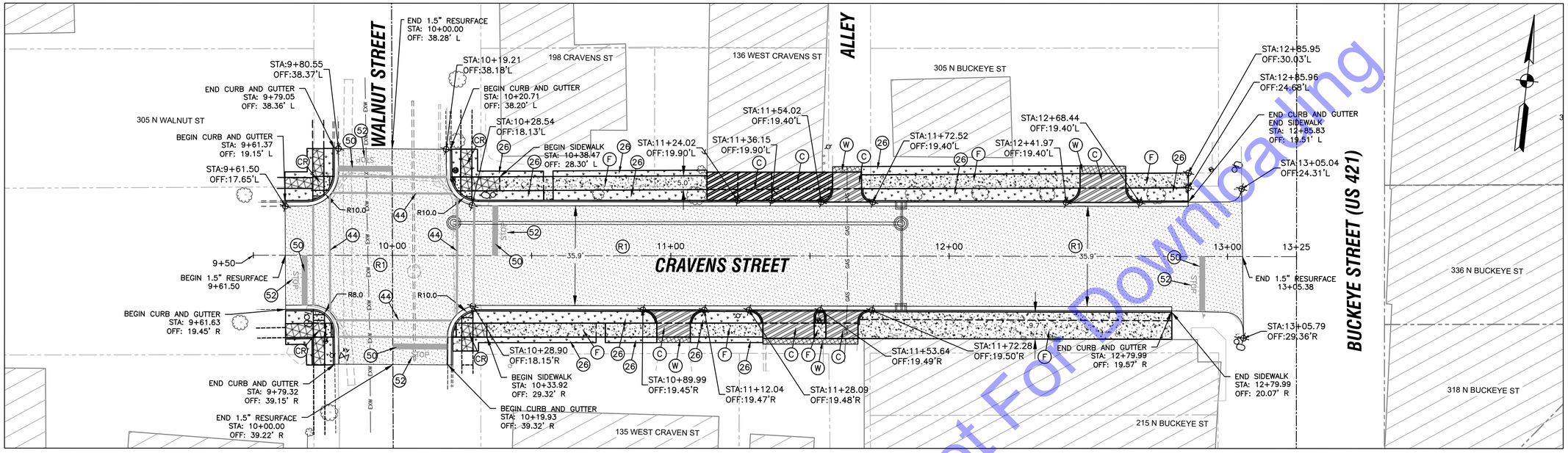

LAYOUT PLAN

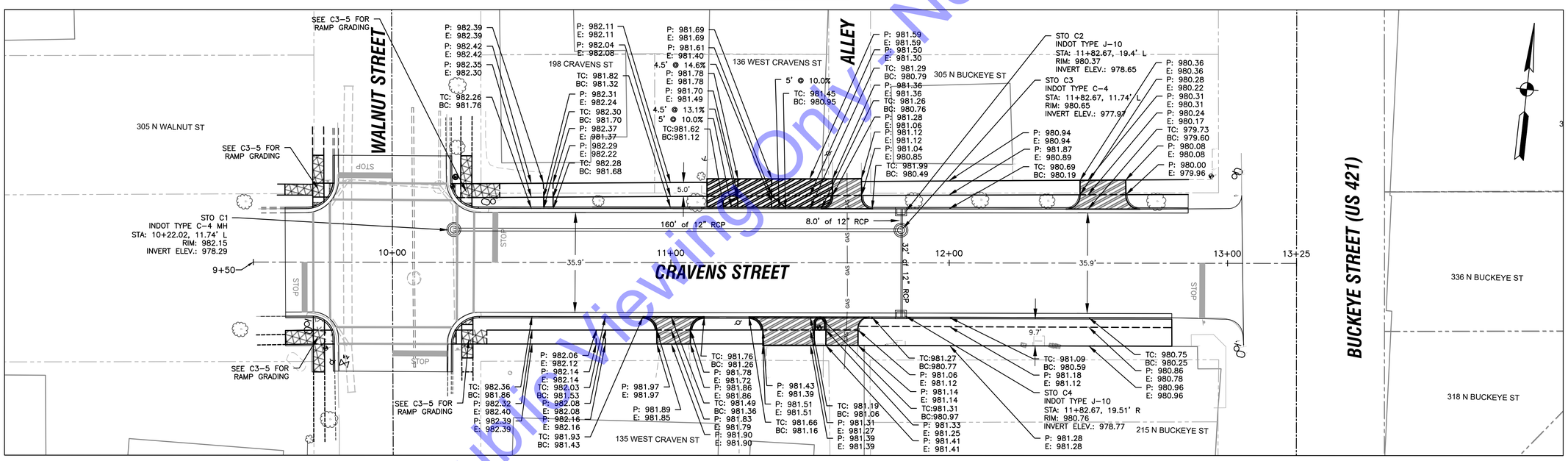

GRADING AND DRAINAGE PLAN

ROAD IMPROVEMENT LEGEND

- (R1) ASPHALT, 1.5 IN. 165 LBS/SYD HMA SURFACE, TYPE "B", 9.5 mm
- (A) ASPHALT ENTRANCE, DEPTH VARIES
- (J2) COMPACTED AGGREGATE No. 53
- (AT) ASPHALT TURN-OUT
- (F) CONCRETE SIDEWALK, 4 IN. ON 2 IN. COMPACTED AGGREGATE No. 53
- (C) CONCRETE ENTRANCE, 6" CONC, ON 4" COMPACTED AGGREGATE No. 53, ON COMPACTED SUBGRADE
- (CR) CURB RAMP, CONCRETE
- (26) SEEDING WITH EROSION CONTROL BLANKET

PAVEMENT MARKING LEGEND

- (W) ASPHALT WEDGING
- (P) ON-STREET PARKING
- (SC) SAW CUT EX. ASPHALT
- (D) DETECTABLE WARNING SYSTEM (DWS)
- (44) LINE, THERMOPLASTIC, SOLID, WHITE, 6 IN.
- (46) TRANSVERSE MARKING, THERMOPLASTIC, CROSSWALK LINE, WHITE, 24 IN.
- (50) TRANSVERSE MARKINGS, THERMOPLASTIC, SOLID, WHITE, 24 IN. STOP BAR
- (52) PAVEMENT MESSAGE MARKING, THERMOPLASTIC, STOP

NOTES

1. MAINTAIN ACCESS TO BUSINESSES AND RESIDENCES AT ALL TIMES. IF THIS IS NOT POSSIBLE, CONTRACTOR SHALL COORDINATE ACCESS CLOSURE WITH BUSINESS/RESIDENT.
2. CONTRACTOR SHALL TAKE APPROPRIATE MEASURES TO PROTECT WORK AREAS ADJACENT TO LIVE TRAFFIC.
3. EXISTING PAVEMENT MARKINGS REMOVED BY CONSTRUCTION ACTIVITIES SHALL BE REPLACED AS CLOSE AS POSSIBLE TO EXISTING LOCATION.

HORIZONTAL SCALE: 1" = 20'-0"
0 10' 20' 40' 60'

COMMONWEALTH ENGINEERS, INC.
A wealth of resources to master a common goal.
https://commonwealthengineers.com/
OFFICE LOCATIONS IN:
INDIANAPOLIS, IN. (2)
EVANSVILLE, IN.
FORT WAYNE, IN.
CROWN POINT, IN.
BOWLING GREEN, KY.
SOUTH BEND, IN.

JEFF T. LASHLEE REGISTERED No. 12200746 STATE OF INDIANA PROFESSIONAL ENGINEER
Signature 5/01/25 Date

TOWN OF OSGOOD
RIPLEY COUNTY, INDIANA
2025 COMMUNITY CROSSINGS MATCHING GRANT (CCMG) ROUND 1 STREET IMPROVEMENTS

© 2025 BY COMMONWEALTH ENGINEERS, INC. ALL RIGHTS RESERVED. REPRODUCTION BY ANY METHOD IN WHOLE OR IN PART WITHOUT PERMISSION IS PROHIBITED

IndianaUtilities 811 — Know what's below. Dig carefully. 1-800-382-5544 (ITS THE LAW)

No.	Submittal Revision	By	Date

Designed By:	Drawn By:	Checked By:
ITV	JTL	RLM
Issue Date: 5/01/2025	Project No: H25019	Scale: AS SHOWN

CRAVENS ST PLAN VIEW - LINE "C"

Drawing No: **C2-5**

Sheet: 17 OF 33

For Public Viewing Only - Not For Downloading

File: Z:\SHARED\IN CLIENTS M\ZOSGOOD\OD H25019 2025-R1 CCMG\06 CAD\A CURRENT FILES\01 DRAWINGS\B SHEET FILES\PLAN SHEETS.DWG
Saved: 5/1/2025 11:32:48 AM Plotted: 5/1/2025 11:41:01 AM Current User: Ignacio Veloz, EI LastSavedBy: veloz

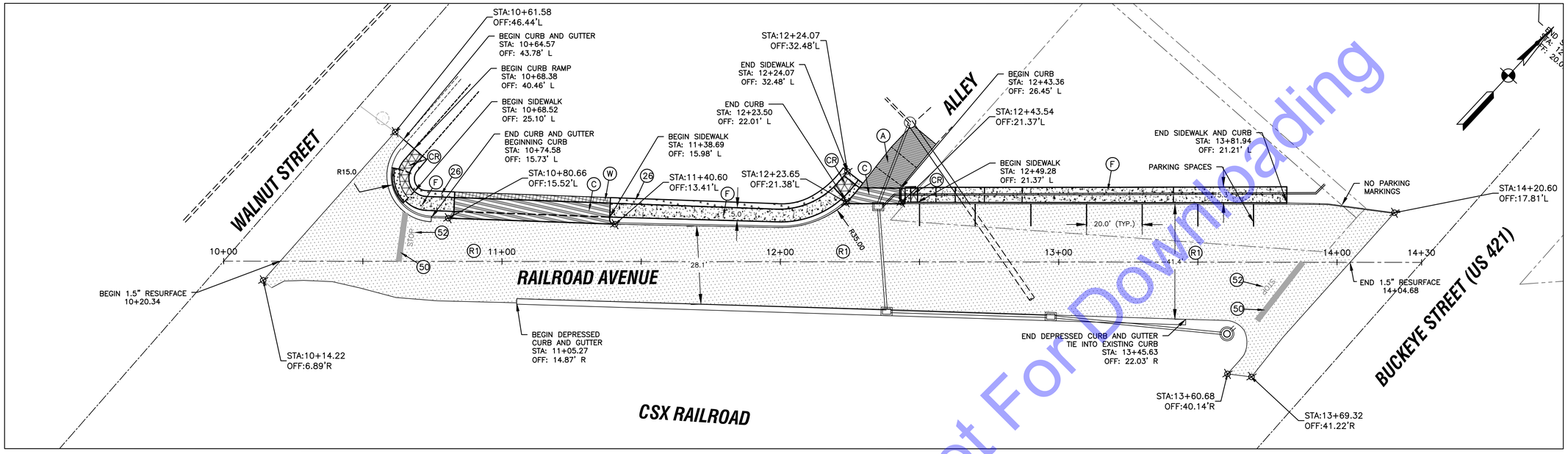

LAYOUT PLAN

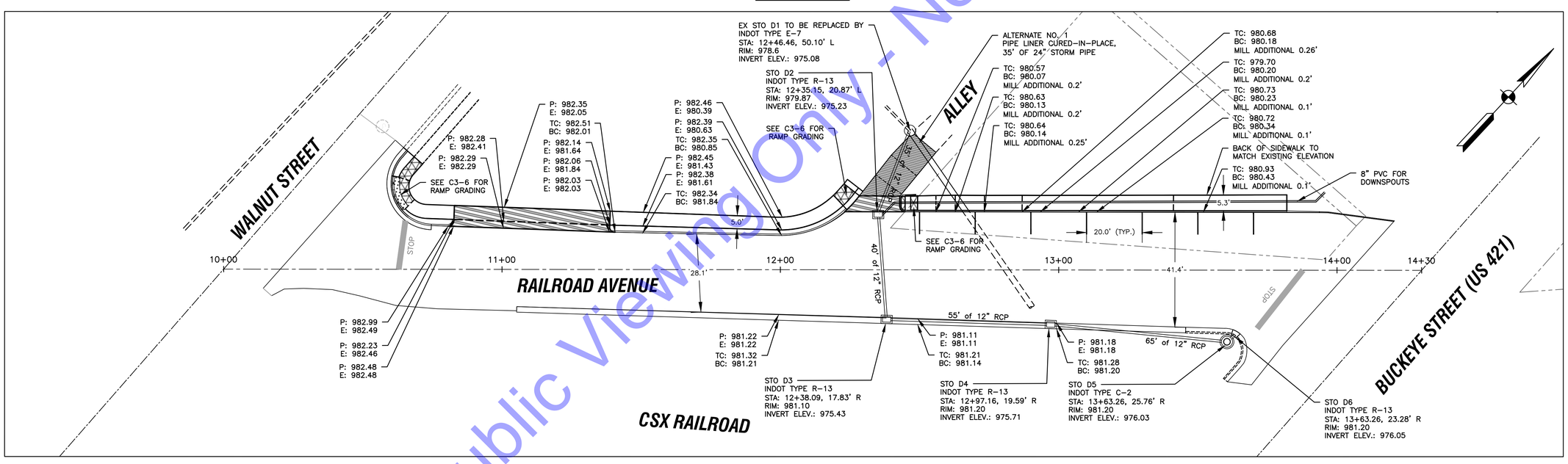

GRADING AND DRAINAGE PLAN

ROAD IMPROVEMENT LEGEND

- (R1) ASPHALT, 1.5 IN. 165 LBS/SYD HMA SURFACE, TYPE "B", 9.5 mm
- (A) ASPHALT ENTRANCE, DEPTH VARIES
- (J2) COMPACTED AGGREGATE No. 53
- (AT) ASPHALT TURN-OUT
- (F) CONCRETE SIDEWALK, 4 IN. ON 2 IN. COMPACTED AGGREGATE No. 53
- (C) CONCRETE ENTRANCE, 6" CONC, ON 4" COMPACTED AGGREGATE No. 53, ON COMPACTED SUBGRADE
- (CR) CURB RAMP, CONCRETE
- (26) SEEDING WITH EROSION CONTROL BLANKET
- (W) ASPHALT WEDGING
- (P) ON-STREET PARKING
- (SC) SAW CUT EX. ASPHALT
- (D) DETECTABLE WARNING SYSTEM (DWS)

PAVEMENT MARKING LEGEND

- (44) LINE, THERMOPLASTIC, SOLID, WHITE, 6 IN.
- (46) TRANSVERSE MARKING, THERMOPLASTIC, CROSSWALK LINE, WHITE, 24 IN.
- (50) TRANSVERSE MARKINGS, THERMOPLASTIC, SOLID, WHITE, 24 IN. STOP BAR
- (52) PAVEMENT MESSAGE MARKING, THERMOPLASTIC, STOP

NOTES

1. MAINTAIN ACCESS TO BUSINESSES AND RESIDENCES AT ALL TIMES. IF THIS IS NOT POSSIBLE, CONTRACTOR SHALL COORDINATE ACCESS CLOSURE WITH BUSINESS/RESIDENT.
2. CONTRACTOR SHALL TAKE APPROPRIATE MEASURES TO PROTECT WORK AREAS ADJACENT TO LIVE TRAFFIC.
3. EXISTING PAVEMENT MARKINGS REMOVED BY CONSTRUCTION ACTIVITIES SHALL BE REPLACED AS CLOSE AS POSSIBLE TO EXISTING LOCATION.

HORIZONTAL SCALE: 1" = 20'-0"

0 10' 20' 40' 60'

For Public Viewing Only - Not For Downloading

COMMONWEALTH ENGINEERS, INC.
A wealth of resources to master a common goal.
https://commonwealthengineers.com/
OFFICE LOCATIONS IN:
INDIANAPOLIS, IN. (2)
EVANSVILLE, IN.
FORT WAYNE, IN.
CROWN POINT, IN.
BOWLING GREEN, KY.
SOUTH BEND, IN.

JEFF T. LASALLE REGISTERED No. 12200746 STATE OF INDIANA PROFESSIONAL ENGINEER

Signature 5/01/25 Date

TOWN OF OSGOOD
RIPLEY COUNTY, INDIANA
2025 COMMUNITY CROSSINGS MATCHING GRANT (CCMG) ROUND 1 STREET IMPROVEMENTS

© 2025 BY COMMONWEALTH ENGINEERS, INC. ALL RIGHTS RESERVED. REPRODUCTION BY ANY METHOD IN WHOLE OR IN PART WITHOUT PERMISSION IS PROHIBITED

Indiana811 Know what's below. Call before you dig.
1-800-382-5544 (ITS THE LAW)

No.	Submittal / Revision	By	Date

Designed By:	Drawn By:	Checked By:
ITV	JTL	RLM
Issue Date: 5/01/2025	Project No: H25019	Scale: AS SHOWN

RAILROAD AVE PLAN VIEW - LINE "D"

Drawing No: C2-6

Sheet: 18 OF 33

File: Z:\SHAREDIN CLIENTS IN-Z\OSGOOD\D H25019 2025-R1 CCMG\06 CADA CURRENT FILES\01 DRAWINGS\B SHEET FILES\PLAN SHEETS.DWG
Saved: 5/1/2025 11:32:48 AM Plotted: 5/1/2025 11:41:33 AM Current User: Ignacio Velez, El LastSavedBy: velez

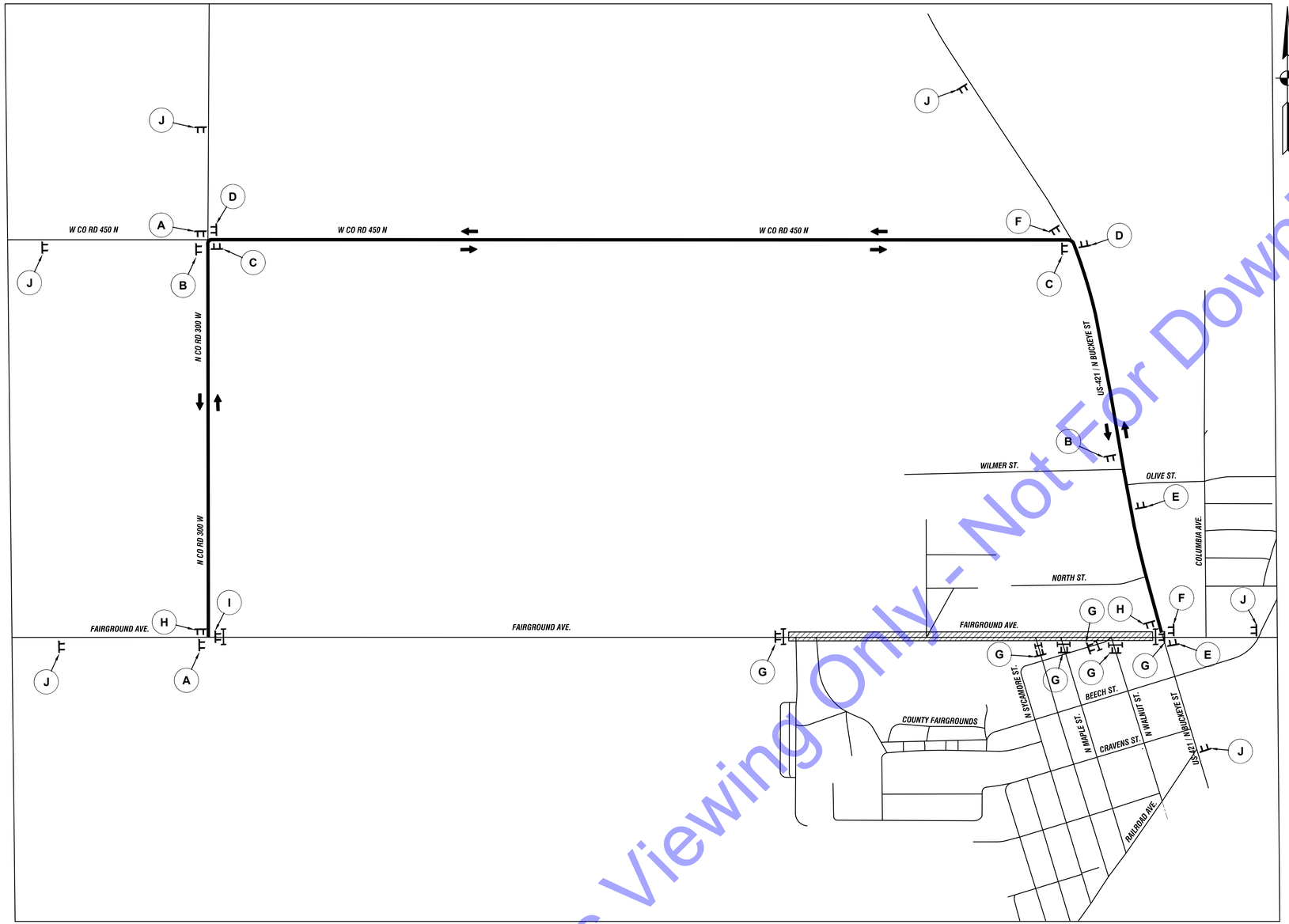

DETOUR ROUTE

SCALE: 1"=400'-0"

0 400' 800'

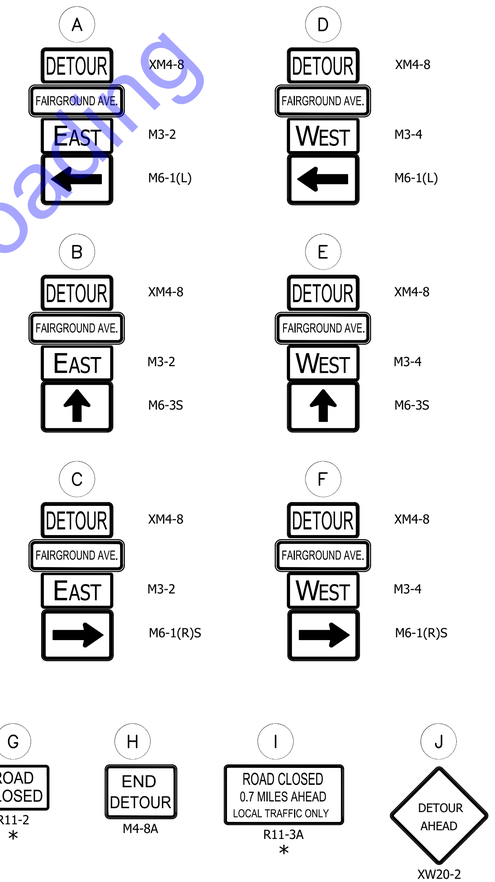

* Road Closure Sign Assembly (RCSA)

LEGEND:

- Type III Barricade
- Construction Sign
- Detour Direction
- Work Zone
- Detour Route

GENERAL NOTES:

1. ALL SIGNS, BARRICADES, AND OTHER TRAFFIC CONTROL DEVICES SHALL BE PLACED IN ACCORDANCE WITH LATEST EDITION OF THE INDIANA MUTCD AND INDOT STANDARDS.
2. CONTRACTOR IS RESPONSIBLE FOR PROPER IMPLEMENTATION AND MAINTENANCE OF THE TRAFFIC CONTROL PLAN.
3. MAINTAIN ACCESS TO DRIVEWAYS AT ALL TIMES OR COORDINATE CLOSURE WITH PROPERTY OWNER.
4. IMPLEMENT SIDE STREET BARRICADES AND RCSA AS NEEDED.

For Public Viewing Only - Not For Downloading

COMMONWEALTH ENGINEERS, INC.
A wealth of resources to master a common goal.
https://commonwealthengineers.com/
OFFICE LOCATIONS IN:
INDIANAPOLIS, IN. (2)
EVANSVILLE, IN.
FORT WAYNE, IN.
CROWN POINT, IN.
BOWLING GREEN, KY.
SOUTH BEND, IN.

JEFF T. LASALLE
REGISTERED No. 12200746 STATE OF INDIANA
PROFESSIONAL ENGINEER

Signature 5/01/25 Date

TOWN OF OSGOOD
RIPLEY COUNTY, INDIANA

2025 COMMUNITY CROSSINGS MATCHING GRANT (CCMG) ROUND 1 STREET IMPROVEMENTS

© 2025 BY COMMONWEALTH ENGINEERS, INC. ALL RIGHTS RESERVED. REPRODUCTION BY ANY METHOD IN WHOLE OR IN PART WITHOUT PERMISSION IS PROHIBITED

Indiana811 Know what's below. Dig safely.
1-800-382-5544 (ITS THE LAW)

No.	Submittal Revision	By	Date

Designed By:	Drawn By:	Checked By:
ITV	JTL	RLM
Issue Date: 5/01/2025	Project No: H25019	Scale: AS SHOWN

MAINTENANCE OF TRAFFIC - DETOUR ROUTE FOR FAIRGROUNDS AVE.

Drawing No:
TC-1

Sheet: 19 OF 33

File: Z:\SHAREDIN CLIENTS M-Z\OSGOOD\H25019 2025-R1 CCMG\06 CAD\A CURRENT FILES\01 DRAWINGS\B SHEET FILES\PLAN SHEETS.DWG
Saved: 5/1/2025 11:32:48 AM Plotted: 5/1/2025 11:41:53 AM Current User: Ignacio Veloz, E Last Saved By: veloz

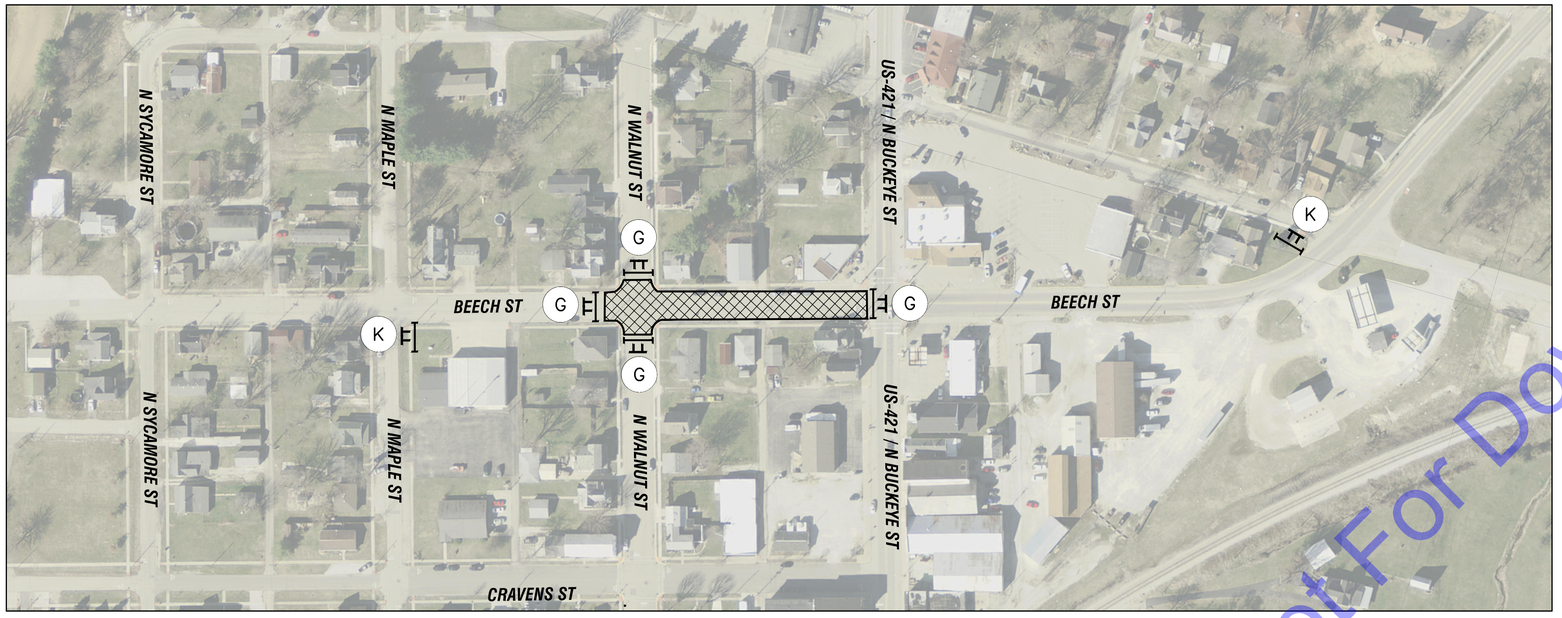

MOT - Beech St.

SCALE: 1"=100'-0"

0 100' 200'

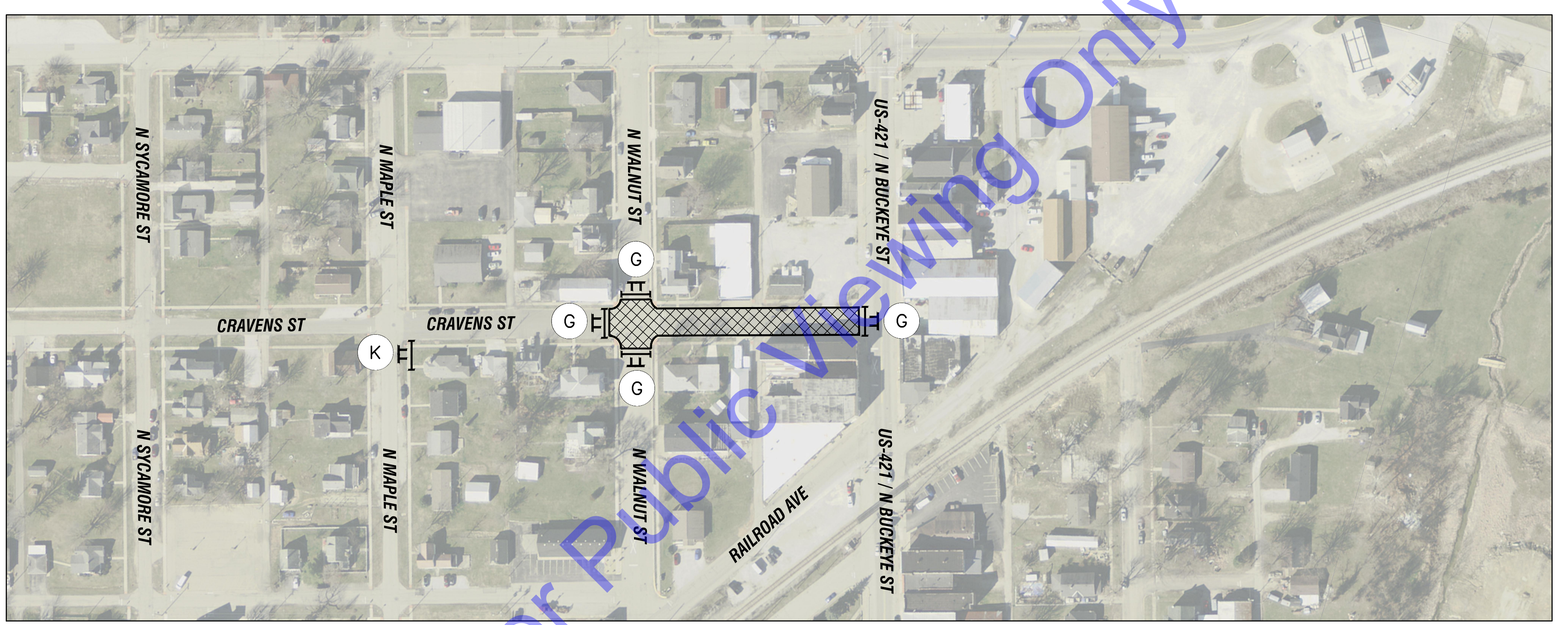

MOT - Cravens St.

SCALE: 1"=100'-0"

0 100' 200'

G ROAD CLOSED R11-2 *

K ROAD CLOSED TO THRU TRAFFIC R11-4 *

* Road Closure Sign Assembly (RCSA)

LEGEND:

- Type III Barricade
- Construction Sign
- Detour Direction
- Work Zone

GENERAL NOTES:

1. ALL SIGNS, BARRICADES, AND OTHER TRAFFIC CONTROL DEVICES SHALL BE PLACED IN ACCORDANCE WITH LATEST EDITION OF THE INDIANA MUTCD AND INDOT STANDARDS.
2. CONTRACTOR IS RESPONSIBLE FOR PROPER IMPLEMENTATION AND MAINTENANCE OF THE TRAFFIC CONTROL PLAN.
3. MAINTAIN ACCESS TO DRIVEWAYS AT ALL TIMES OR COORDINATE CLOSURE WITH PROPERTY OWNER.
4. IMPLEMENT SIDE STREET BARRICADES AND RCSA AS NEEDED.

For Public Viewing Only - Not For Downloading

COMMONWEALTH ENGINEERS, INC.
A wealth of resources to master a common goal.
https://commonwealthengineers.com/
OFFICE LOCATIONS IN:
INDIANAPOLIS, IN. (2)
EVANSVILLE, IN.
FORT WAYNE, IN.
CROWN POINT, IN.
BOWLING GREEN, KY.
SOUTH BEND, IN.

JEFF T. LASALLE REGISTERED No. 12200746 STATE OF INDIANA PROFESSIONAL ENGINEER

Signature 5/01/25 Date

TOWN OF OSGOOD
RIPLEY COUNTY, INDIANA

2025 COMMUNITY CROSSINGS MATCHING GRANT (CCMG) ROUND 1 STREET IMPROVEMENTS

© 2025 BY COMMONWEALTH ENGINEERS, INC.-ALL RIGHTS RESERVED. REPRODUCED BY ANY METHOD IN WHOLE OR IN PART WITHOUT PERMISSION IS PROHIBITED

Indiana811 Know what's below. Call before you dig. 1-800-382-5544 (ITS THE LAW)

No.	Submittal / Revision	By	Date

Designed By:	Drawn By:	Checked By:
ITV	JTL	RLM
Issue Date: 5/01/2025	Project No: H25019	Scale: AS SHOWN

MAINTENANCE OF TRAFFIC - DETAILS

Drawing No:

TC-2

Sheet: 20 OF 33

File: Z:\SHAREDIN CLIENTS M:\OSGOOD\OSGOOD H25019 2025-R1 CCMG\06 CAD\A CURRENT FILES\01 DRAWINGS\B SHEET FILES\PLAN SHEETS.DWG
Saved: 5/1/2025 11:32:48 AM Plotted: 5/1/2025 11:42:16 AM Current User: Ignacio Veloz, El LastSaved By: ivelcz

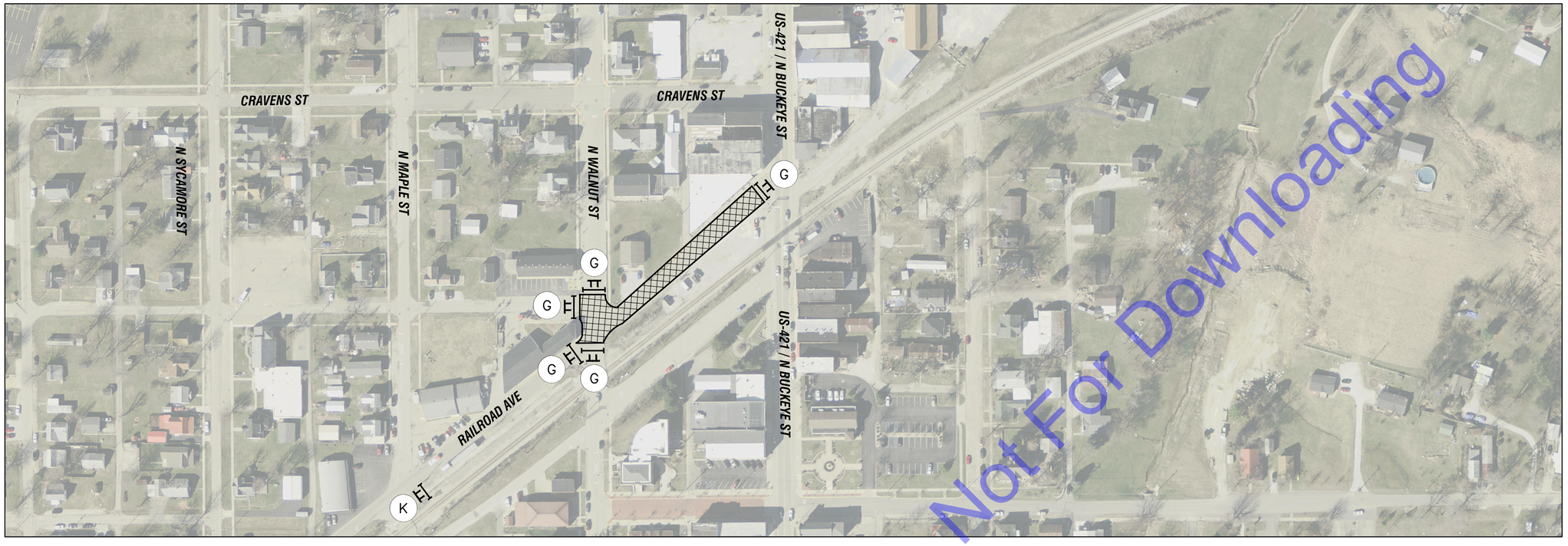

MOT - Railroad Ave.

SCALE: 1"=100'-0"

0 100' 200'

For Public Viewing Only - Not For Downloading

G

ROAD CLOSED

R11-2

*

K

ROAD CLOSED TO THRU TRAFFIC

R11-4

*

* Road Closure Sign Assembly (RCSA)

LEGEND:

- Type III Barricade
- Construction Sign
- Detour Direction
- Work Zone

GENERAL NOTES:

1. ALL SIGNS, BARRICADES, AND OTHER TRAFFIC CONTROL DEVICES SHALL BE PLACED IN ACCORDANCE WITH LATEST EDITION OF THE INDIANA MUTCD AND INDOT STANDARDS.
2. CONTRACTOR IS RESPONSIBLE FOR PROPER IMPLEMENTATION AND MAINTENANCE OF THE TRAFFIC CONTROL PLAN.
3. MAINTAIN ACCESS TO DRIVEWAYS AT ALL TIMES OR COORDINATE CLOSURE WITH PROPERTY OWNER.
4. IMPLEMENT SIDE STREET BARRICADES AND RCSA AS NEEDED.

COMMONWEALTH ENGINEERS, INC.
A wealth of resources to master a common goal.
https://commonwealthengineers.com/
OFFICE LOCATIONS IN:
INDIANAPOLIS, IN. (2)
EVANSVILLE, IN.
FORT WAYNE, IN.
CROWN POINT, IN.
BOWLING GREEN, KY.
SOUTH BEND, IN.

JEFF T. LASALLE
REGISTERED No. 12200746 STATE OF INDIANA
PROFESSIONAL ENGINEER

Signature 5/01/25 Date

TOWN OF OSGOOD
RIPLEY COUNTY, INDIANA

2025 COMMUNITY CROSSINGS MATCHING GRANT (CCMG) ROUND 1 STREET IMPROVEMENTS

© 2025 BY COMMONWEALTH ENGINEERS, INC.-ALL RIGHTS RESERVED. REPRODUCTION BY ANY METHOD IN WHOLE OR IN PART WITHOUT PERMISSION IS PROHIBITED

Indiana811 Know what's below. Call before you dig.
1-800-382-5544 (ITS THE LAW)

No.	Submittal / Revision	By	Date

Designed By:	Drawn By:	Checked By:
ITV	JTL	RLM
Issue Date: 5/01/2025	Project No: H25019	Scale: AS SHOWN

MAINTENANCE OF TRAFFIC - DETAILS

Drawing No:

TC-3

Sheet: 21 OF 33

File: Z:\SHAREDIN CLIENTS M:\OSGOOD\OSGOOD H25019 2025-R1 CCMG\06 CADA CURRENT FILES\01 DRAWINGS\B SHEET FILES\PLAN SHEETS.DWG
Saved: 5/1/2025 11:32:48 AM Plotted: 5/1/2025 11:42:26 AM Current User: Ignacio Veloz, El LastSaved By: ivelcz

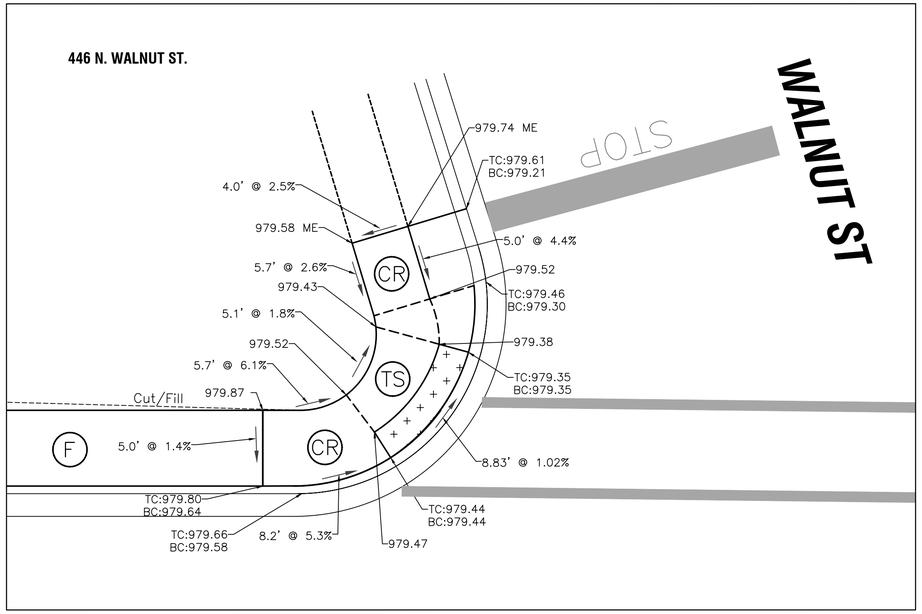

FAIRGROUND AVENUE

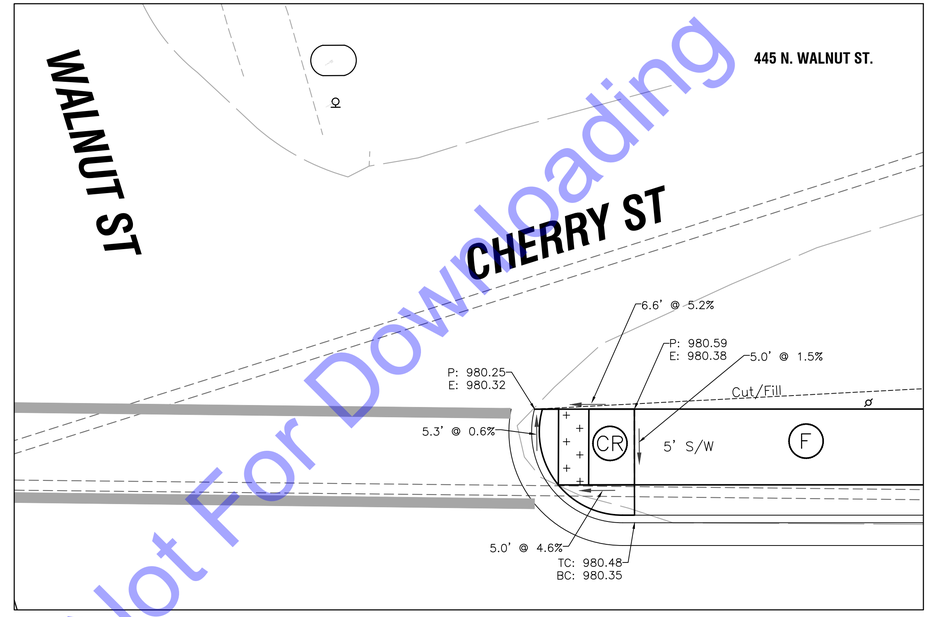

FAIRGROUND AVENUE

For Public Viewing Only - Not For Downloading

HORIZONTAL SCALE: 1" = 5'-0"

0 2.5' 5' 10' 20'

COMMONWEALTH ENGINEERS, INC.
A wealth of resources to master a common goal.
https://commonwealthengineers.com/
OFFICE LOCATIONS IN:
INDIANAPOLIS, IN. (2)
EVANSVILLE, IN.
FORT WAYNE, IN.
CROWN POINT, IN.
BOWLING GREEN, KY.
SOUTH BEND, IN.

JEFF T. LASALLE
REGISTERED
No. 12200746
STATE OF INDIANA
PROFESSIONAL ENGINEER

Signature 5/01/25 Date

TOWN OF OSGOOD
RIPLEY COUNTY, INDIANA

2025 COMMUNITY CROSSINGS MATCHING GRANT (CCMG) ROUND 1 STREET IMPROVEMENTS

© 2025 BY COMMONWEALTH ENGINEERS, INC.-ALL RIGHTS RESERVED. REPRODUCTION BY ANY METHOD IN WHOLE OR IN PART WITHOUT PERMISSION IS PROHIBITED

Indiana811 Know what's below. Call before you dig.
1-800-382-5544 (ITS THE LAW)

No.	Submittal / Revision	By	Date

Designed By:	Drawn By:	Checked By:
ITV	JTL	RLM
Issue Date: 5/01/2025	Project No: H25019	Scale: AS SHOWN

FAIRGROUND AVE - CURB RAMP DETAILS

Drawing No:
C3-1

Sheet: 22 OF 33

File: Z:\SHAREDIN CLIENTS M:\OSGOOD\OSGOOD H25019 2025-R1 CCMG\06 CADA CURRENT FILES\01 DRAWINGS\B SHEET FILES\PLAN SHEETS.DWG
Saved: 5/1/2025 11:32:48 AM Plotted: 5/1/2025 11:42:34 AM Current User: Ignacio Veloz, El LastSaved By: ivelez

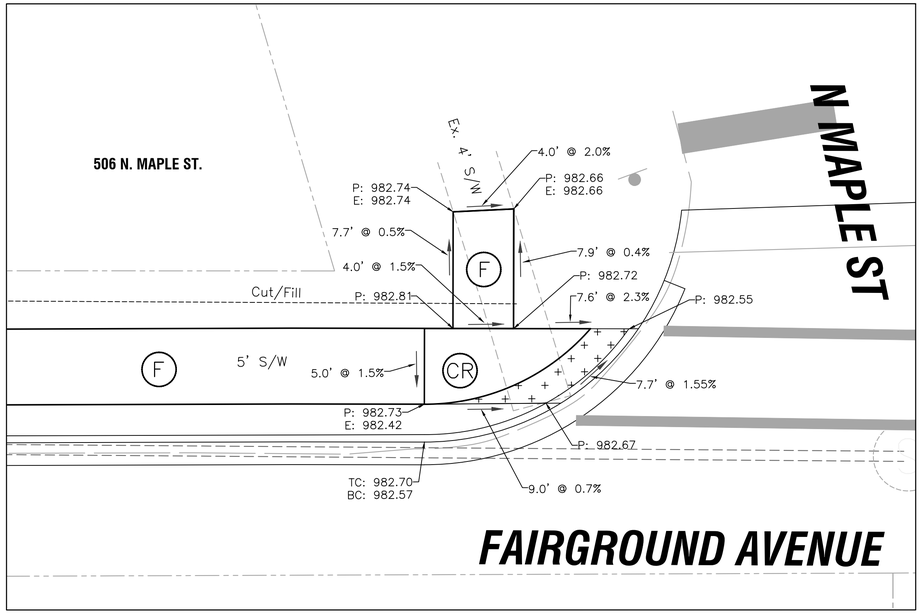

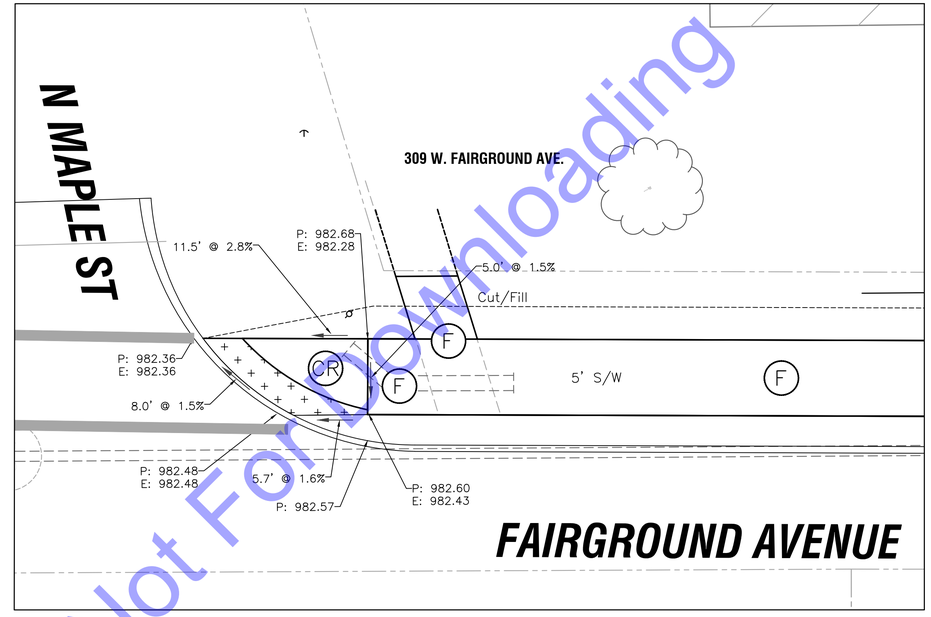

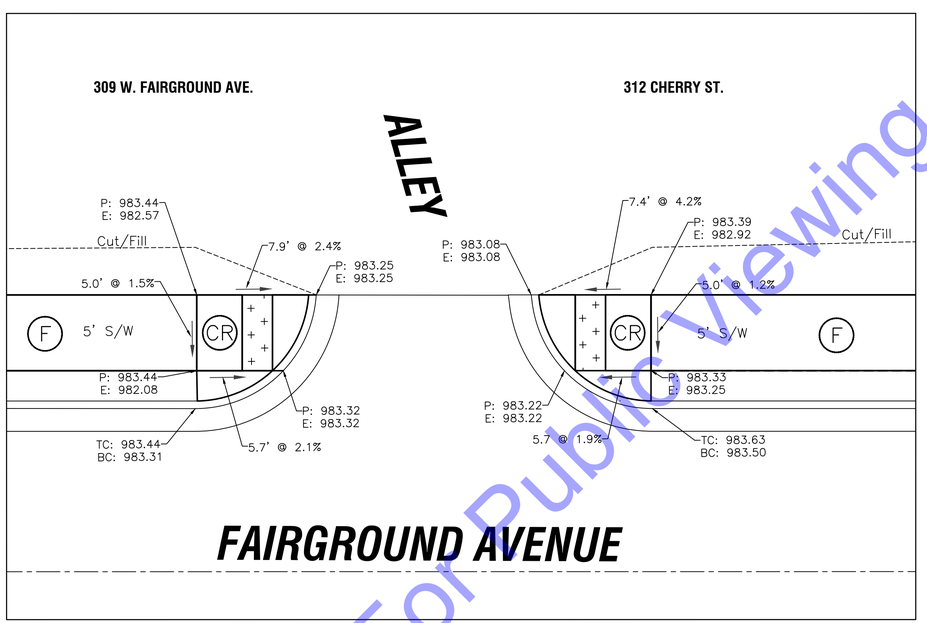

HORIZONTAL SCALE: 1" = 5'-0"

0 2.5' 5' 10' 20'

For Public Viewing Only - Not For Downloading

COMMONWEALTH ENGINEERS, INC.
A wealth of resources to master a common goal.
https://commonwealthengineers.com/
OFFICE LOCATIONS IN:
INDIANAPOLIS, IN. (2)
EVANSVILLE, IN.
FORT WAYNE, IN.
CROWN POINT, IN.
BOWLING GREEN, KY.
SOUTH BEND, IN.

JEFF T. LASALLE
REGISTERED
No. 12200746
STATE OF INDIANA
PROFESSIONAL ENGINEER

Signature 5/01/25 Date

TOWN OF OSGOOD
RIPLEY COUNTY, INDIANA

2025 COMMUNITY CROSSINGS MATCHING GRANT (CCMG) ROUND 1 STREET IMPROVEMENTS

© 2025 BY COMMONWEALTH ENGINEERS, INC.-ALL RIGHTS RESERVED. REPRODUCTION BY ANY METHOD IN WHOLE OR IN PART WITHOUT PERMISSION IS PROHIBITED

Indiana811 Know what's below. Dig safely.
1-800-382-5544 (ITS THE LAW)

No.	Submittal / Revision	By	Date

Designed By:	Drawn By:	Checked By:
ITV	JTL	RLM
Issue Date: 5/01/2025	Project No: H25019	Scale: AS SHOWN

FAIRGROUND AVE - CURB RAMP DETAILS

Drawing No:
C3-2

Sheet: 23 OF 33

File: Z:\SHAREDIN CLIENTS M:\OSGOOD\OSGOOD H25019 2025-R1 CCMG\06 CAD\A CURRENT FILES\01 DRAWINGS\B SHEET FILES\PLAN SHEETS.DWG
Saved: 5/1/2025 11:32:48 AM Plotted: 5/1/2025 11:42:47 AM Current User: Ignacio Veloz, El LastSaved By: ivelcz

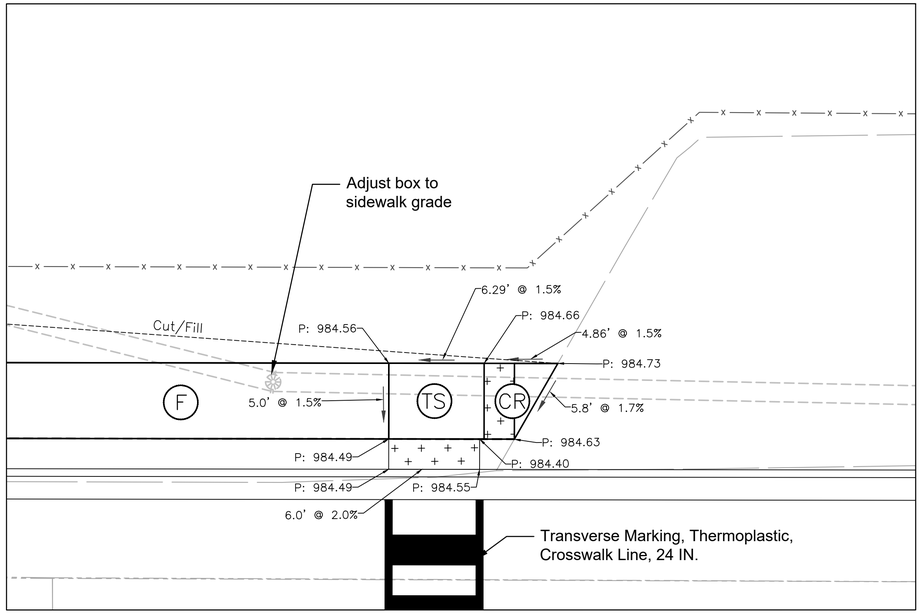

FAIRGROUND AVENUE

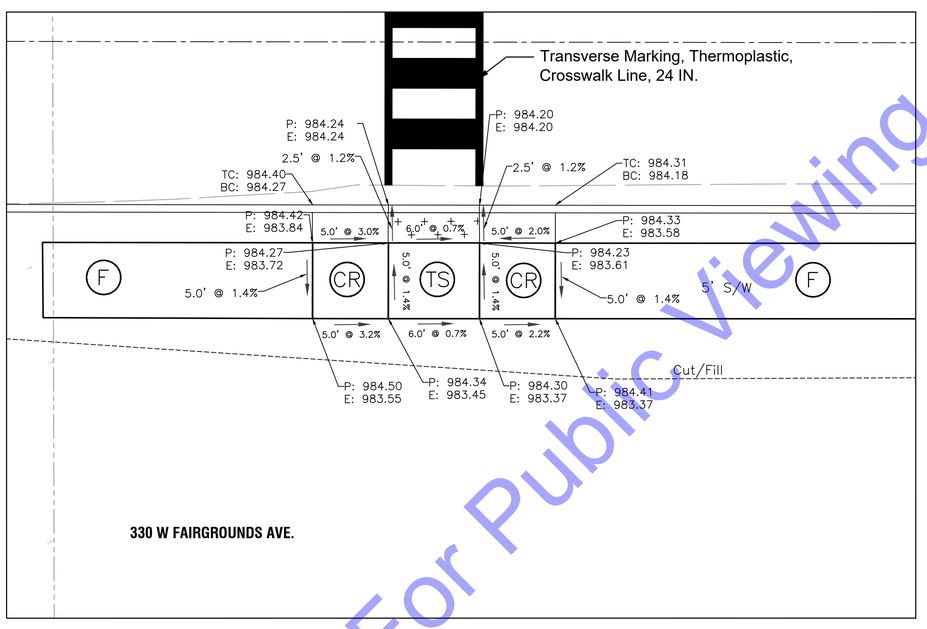

330 W FAIRGROUNDS AVE.

FAIRGROUND AVENUE

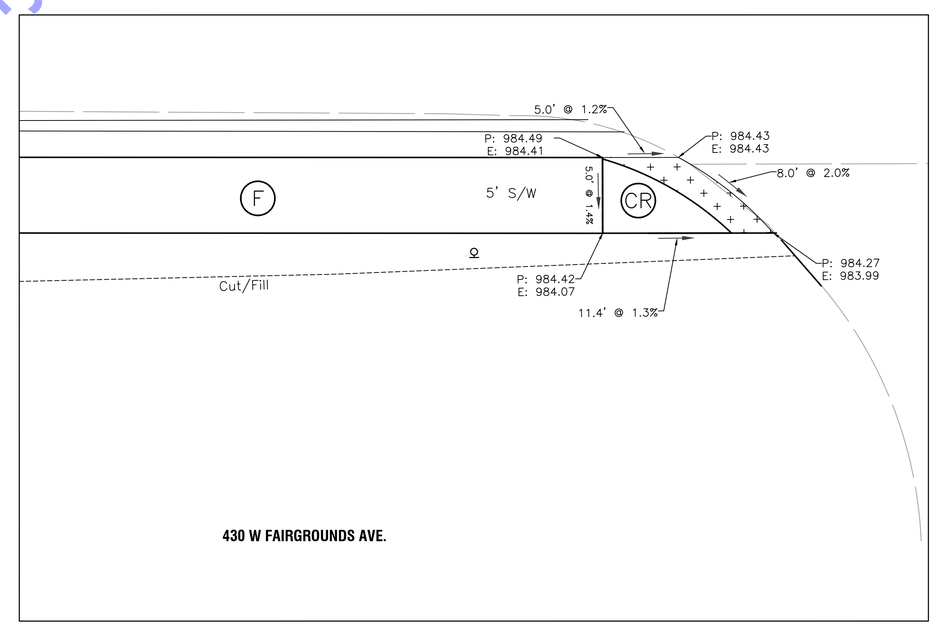

430 W FAIRGROUNDS AVE.

HORIZONTAL SCALE: 1" = 5'-0"

0 2.5' 5' 10' 20'

For Public Viewing Only - Not For Downloading

COMMONWEALTH ENGINEERS, INC.
A wealth of resources to master a common goal.
https://commonwealthengineers.com/
OFFICE LOCATIONS IN:
INDIANAPOLIS, IN. (2)
EVANSVILLE, IN.
FORT WAYNE, IN.
CROWN POINT, IN.
BOWLING GREEN, KY.
SOUTH BEND, IN.

JEFF T. LASALLE
REGISTERED
No. 12200746
STATE OF INDIANA
PROFESSIONAL ENGINEER

Signature 5/01/25 Date

TOWN OF OSGOOD
RIPLEY COUNTY, INDIANA

2025 COMMUNITY CROSSINGS MATCHING GRANT (CCMG) ROUND 1 STREET IMPROVEMENTS

© 2025 BY COMMONWEALTH ENGINEERS, INC. ALL RIGHTS RESERVED. REPRODUCED BY ANY METHOD IN WHOLE OR IN PART WITHOUT PERMISSION IS PROHIBITED

Indiana811 Know what's below. Call before you dig.
1-800-382-5544 (ITS THE LAW)

No.	Submittal / Revision	By	Date

Designed By:	Drawn By:	Checked By:
ITV	JTL	RLM
Issue Date: 5/01/2025	Project No: H25019	Scale: AS SHOWN

FAIRGROUND AVE - CURB RAMP DETAILS

Drawing No:
C3-3

Sheet: 24 OF 33

File: Z:\SHARED\IN CLIENTS M-Z\OSGOOD\OD H25019\2025-R1 CCMG\06 CADA CURRENT FILES\01 DRAWINGS\B SHEET FILES\PLAN SHEETS.DWG
Saved: 5/1/2025 11:32:48 AM Plotted: 5/1/2025 11:43:00 AM Current User: Ignacio Veloz, El LastSavedBy: veloz

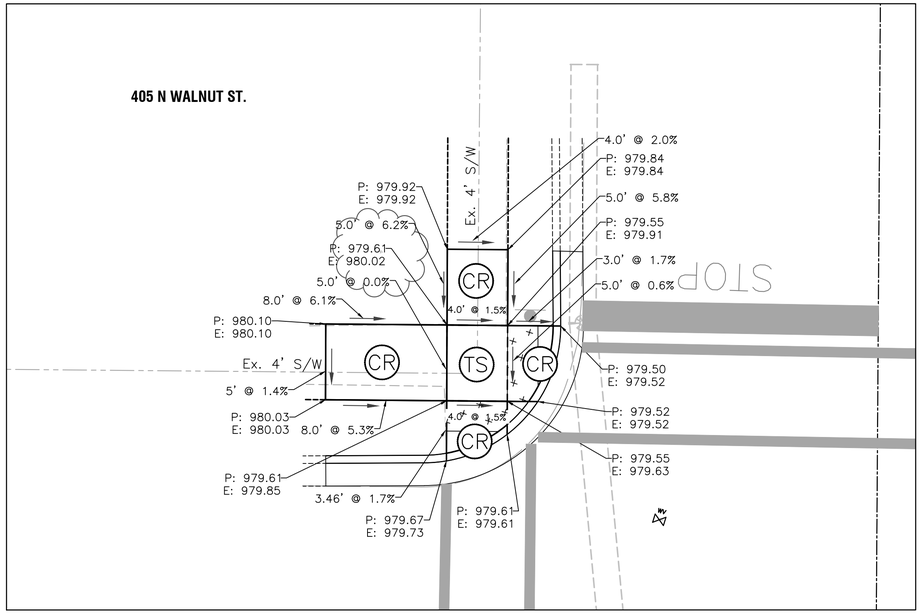

BEECH ST

WALNUT ST

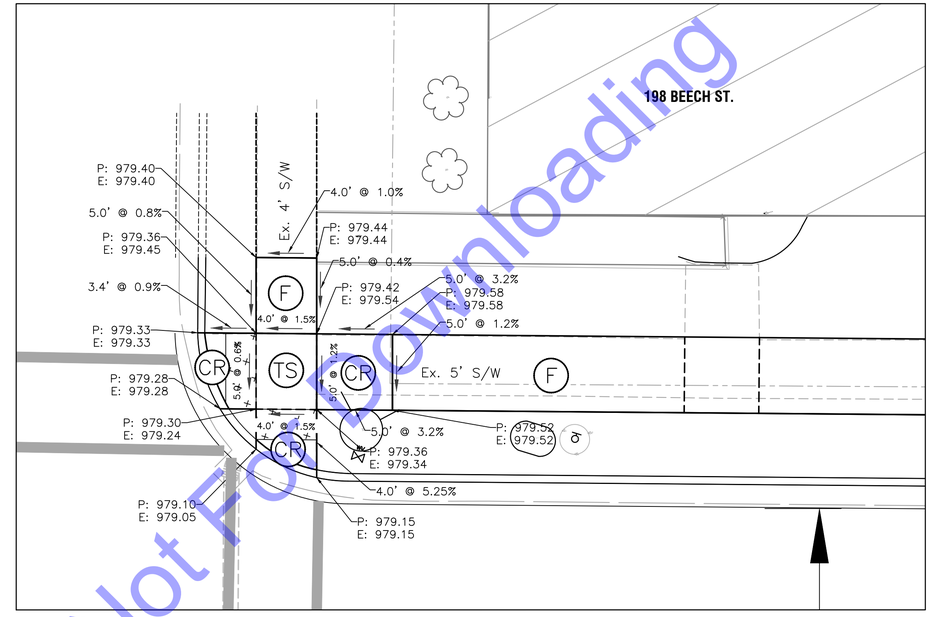

BEECH ST

WALNUT ST

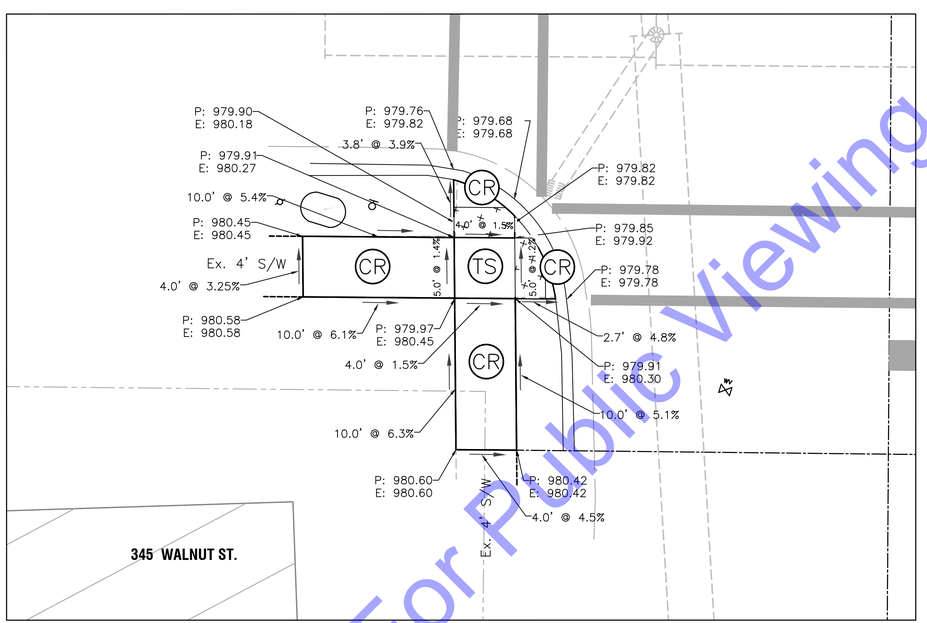

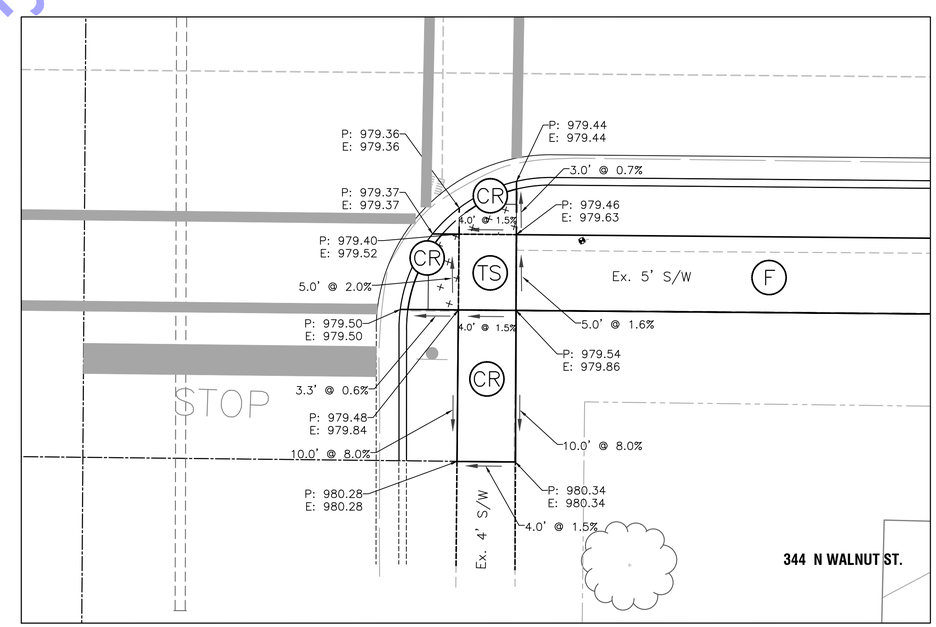

HORIZONTAL SCALE: 1" = 5'-0"

0 2.5' 5' 10' 20'

For Public Viewing Only - Not For Downloading

COMMONWEALTH ENGINEERS, INC.
A wealth of resources to master a common goal.
https://commonwealthengineers.com/
OFFICE LOCATIONS IN:
INDIANAPOLIS, IN. (2)
EVANSVILLE, IN.
FORT WAYNE, IN.
CROWN POINT, IN.
BOWLING GREEN, KY.
SOUTH BEND, IN.

JEFF T. LASALLE
REGISTERED
No. 12200746
STATE OF INDIANA
PROFESSIONAL ENGINEER

Signature 5/01/25 Date

TOWN OF OSGOOD
RIPLEY COUNTY, INDIANA

2025 COMMUNITY CROSSINGS MATCHING GRANT (CCMG) ROUND 1 STREET IMPROVEMENTS

© 2025 BY COMMONWEALTH ENGINEERS, INC.-ALL RIGHTS RESERVED. REPRODUCTION BY ANY METHOD IN WHOLE OR IN PART WITHOUT PERMISSION IS PROHIBITED

Indiana811 Know what's below. Call before you dig.
1-800-382-5544 (ITS THE LAW)

No.	Submittal / Revision	By	Date

Designed By:	Drawn By:	Checked By:
ITV	JTL	RLM
Issue Date: 5/01/2025	Project No: H25019	Scale: AS SHOWN

BEECH ST - CURB RAMP DETAILS

Drawing No:
C3-4

Sheet: 25 OF 33

File: Z:\SHAREDIN CLIENTS M:\OSGOOD\H25019 2025-R1 CCMG\06 CAD\A CURRENT FILES\01 DRAWINGS\B SHEET FILES\PLAN SHEETS.DWG
Saved: 5/1/2025 11:32:48 AM Plotted: 5/1/2025 11:43:18 AM Current User: Ignacio Veloz, El LastSaved By: ivelcz

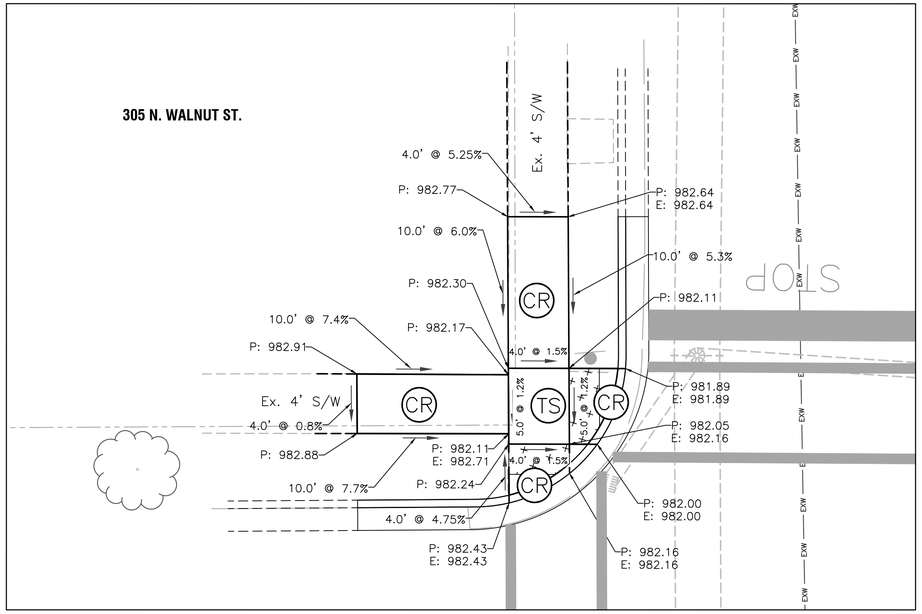

WALNUT ST

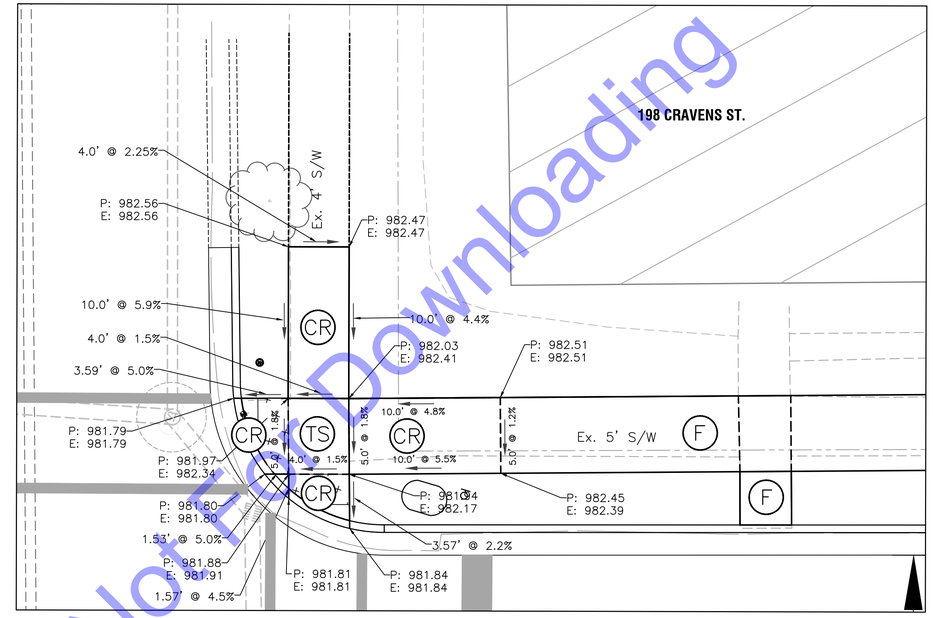

CRAVENS ST

CRAVENS ST

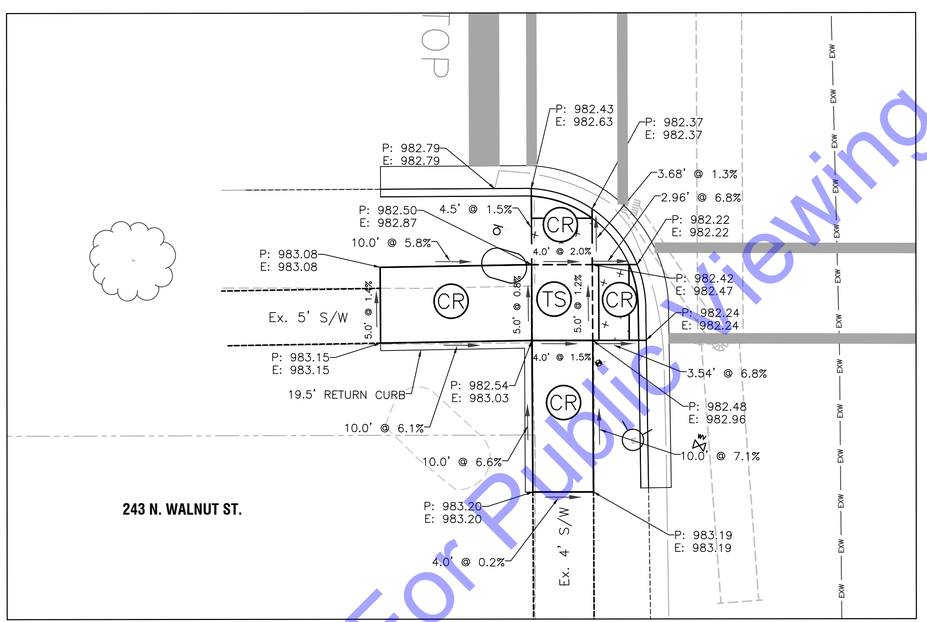

WALNUT ST

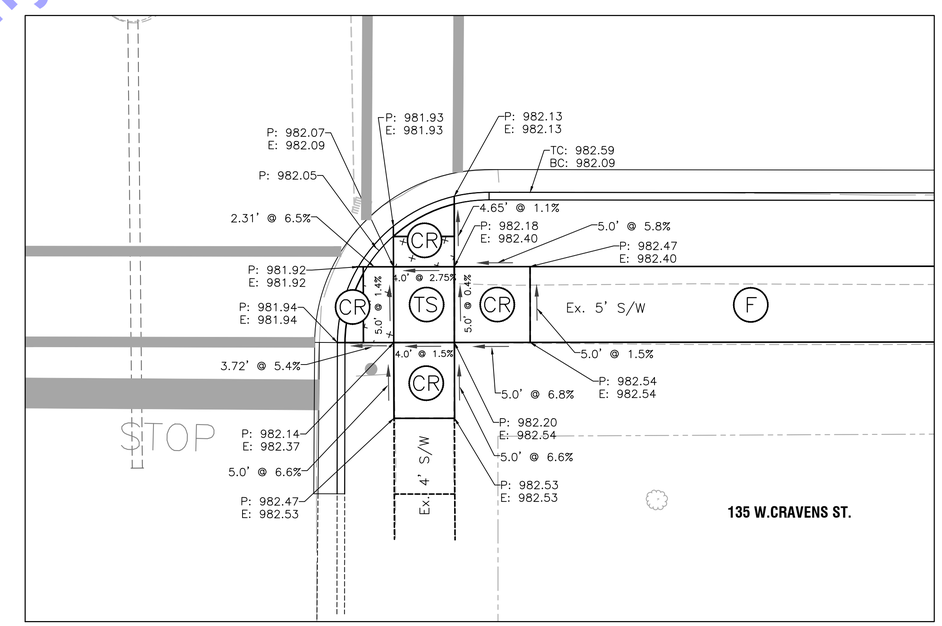

HORIZONTAL SCALE: 1" = 5'-0"

0 2.5' 5' 10' 20'

For Public Viewing Only - Not For Downloading

COMMONWEALTH ENGINEERS, INC.
A wealth of resources to master a common goal.
https://commonwealthengineers.com/
OFFICE LOCATIONS IN:
INDIANAPOLIS, IN. (2)
EVANSVILLE, IN.
FORT WAYNE, IN.
CROWN POINT, IN.
BOWLING GREEN, KY.
SOUTH BEND, IN.

JEFF T. LASALLE
REGISTERED No. 12200746 STATE OF INDIANA
PROFESSIONAL ENGINEER

Signature 5/01/25 Date

TOWN OF OSGOOD
RIPLEY COUNTY, INDIANA

2025 COMMUNITY CROSSINGS MATCHING GRANT (CCMG) ROUND 1 STREET IMPROVEMENTS

© 2025 BY COMMONWEALTH ENGINEERS, INC.-ALL RIGHTS RESERVED. REPRODUCTION BY ANY METHOD IN WHOLE OR IN PART WITHOUT PERMISSION IS PROHIBITED

Indiana811 Know what's below. Call before you dig.
1-800-382-5544 (ITS THE LAW)

No.	Submittal / Revision	By	Date

Designed By:	Drawn By:	Checked By:
ITV	JTL	RLM
Issue Date: 5/01/2025	Project No: H25019	Scale: AS SHOWN

CRAVENS ST - CURB RAMP DETAILS

Drawing No:
C3-5

File: Z:\SHAREDIN CLIENTS M:\OSGOOD\OSGOOD H25019 2025-R1 CCMG\06 CAD\A CURRENT FILES\01 DRAWINGS\B SHEET FILES\PLAN SHEETS.DWG
Saved: 5/1/2025 11:32:48 AM Plotted: 5/1/2025 11:43:33 AM Current User: Ignacio Veloz, El LastSaved By: ivelez

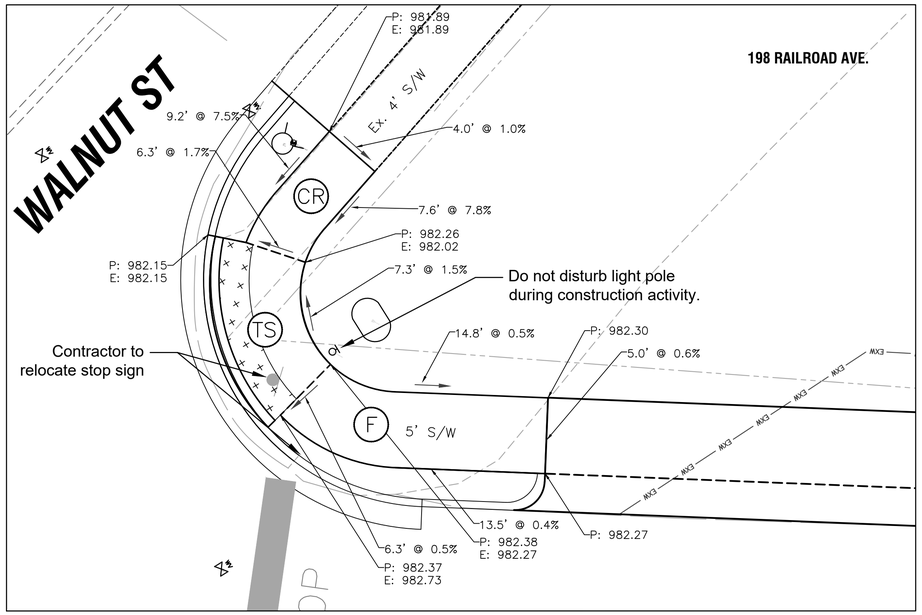

RAILROAD AVENUE

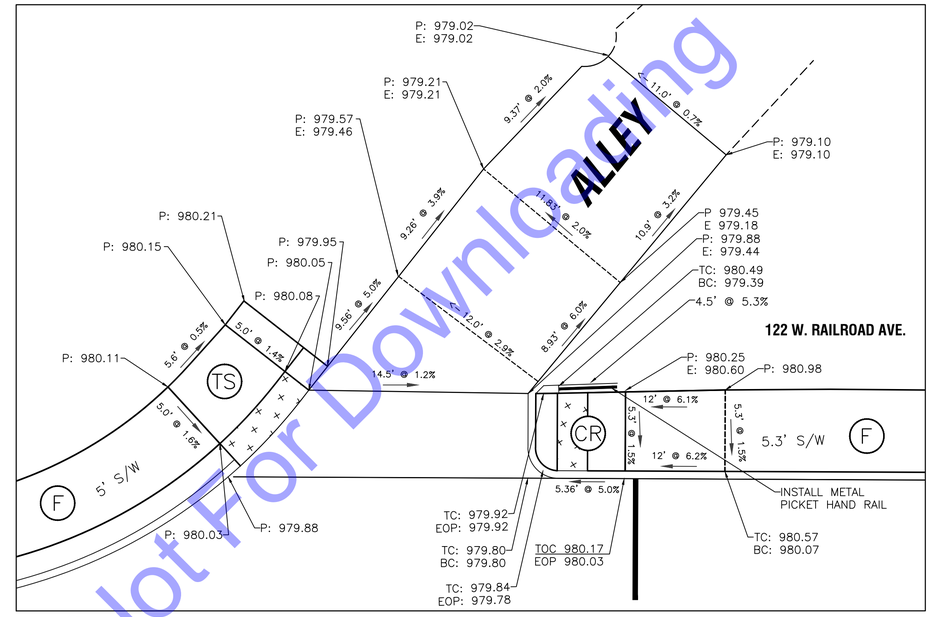

RAILROAD AVENUE

For Public Viewing Only - Not For Downloading

HORIZONTAL SCALE: 1" = 5'-0"

0 2.5' 5' 10' 20'

COMMONWEALTH ENGINEERS, INC.
A wealth of resources to master a common goal.
https://commonwealthengineers.com/
OFFICE LOCATIONS IN:
INDIANAPOLIS, IN. (2)
EVANSVILLE, IN.
FORT WAYNE, IN.
CROWN POINT, IN.
BOWLING GREEN, KY.
SOUTH BEND, IN.

JEFF T. LASALLE
REGISTERED
No. 12200746
STATE OF INDIANA
PROFESSIONAL ENGINEER

Signature 5/01/25 Date

TOWN OF OSGOOD
RIPLEY COUNTY, INDIANA

2025 COMMUNITY CROSSINGS MATCHING GRANT (CCMG) ROUND 1 STREET IMPROVEMENTS

© 2025 BY COMMONWEALTH ENGINEERS, INC. ALL RIGHTS RESERVED. REPRODUCTION BY ANY METHOD IN WHOLE OR IN PART WITHOUT PERMISSION IS PROHIBITED

Indiana811 Know what's below. Dig safely.
1-800-382-5544 (ITS THE LAW)

No.	Submittal / Revision	By	Date

Designed By:	Drawn By:	Checked By:
ITV	JTL	RLM
Issue Date: 5/01/2025	Project No: H25019	Scale: AS SHOWN

RAILROAD AVE - CURB RAMP DETAILS

Drawing No:
C3-6
Sheet: 27 OF 33

File: Z:\SHAREDIN CLIENTS M-Z\OSGOOD\ H25019 2025-R1 CCMG\06 CAD\A CURRENT FILES\01 DRAWINGS\B SHEET FILES\PLAN SHEETS.DWG
Saved: 5/1/2025 11:32:48 AM Plotted: 5/1/2025 11:43:47 AM Current User: Ignacio Veloz, Et LastSavedBy: ivelez

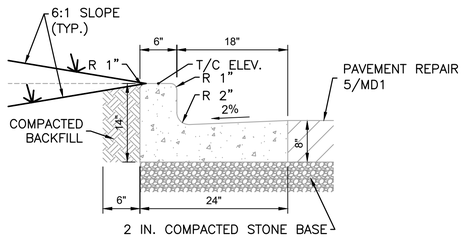

1 CONCRETE CURB AND GUTTER DETAIL

NO SCALE

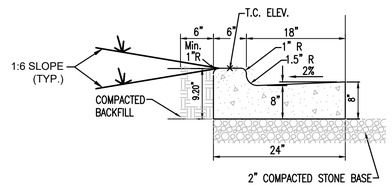

TYPICAL CONCRETE DEPRESSED CURB AND GUTTER DETAIL

2

SCALE: 1"=5'-0"

0 5' 10'

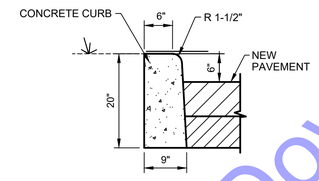

3 VERTICAL CONCRETE CURB DETAIL

SCALE: 1"=5'-0"

0 5' 10'

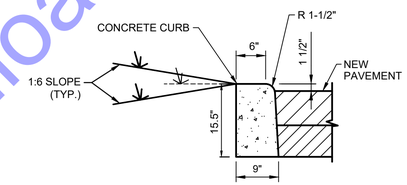

DEPRESSED VERTICAL CONCRETE CURB DETAIL

4

SCALE: 1"=5'-0"

0 5' 10'

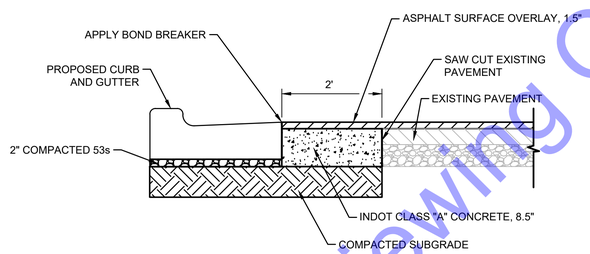

NOTES:

1. CURB PATCHING SHALL BE INCIDENTAL TO THE CONSTRUCTION OF AND INCLUDED IN THE PAY ITEM.

5 STREET WIDENING PATCHING DETAIL

SCALE: 1"=5'-0"

0 5' 10'

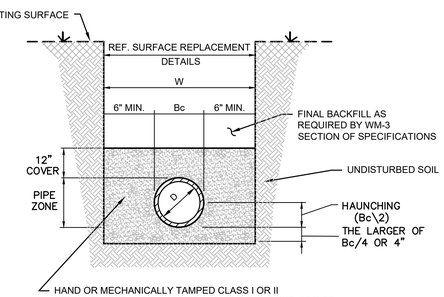

W = MAXIMUM ALLOWABLE TRENCH WIDTH FOR PIPE AS PER ASTM NOT TO EXCEED FOUR (4) FEET FOR 6" THROUGH 24" PIPE NOR SIX (6) FEET FOR 27" THROUGH 48" PIPE

D = PIPE DIAMETER (INTERNAL)

Bc = PIPE DIAMETER (EXTERNAL)

STANDARD METHOD

NOTES:

1. COMPACTED BEDDING STOPS AT SPRING-LINE OF THE PIPE. BACKFILLING ABOVE THIS POINT SHALL BE IN ACCORDANCE WITH THE SPECIFICATIONS AND AS REQUIRED HERE IN.
2. WHEN CLASS I MATERIAL IS USED FOR BEDDING, COMPACTION MAY BE ACCOMPLISHED BY HAND OR MECHANICAL TAMPING.
3. WHEN CLASS II MATERIAL IS USED FOR BEDDING, COMPACTION SHALL BE ACCOMPLISHED ONLY BY HAND OR MECHANICAL TAMPING TO A MINIMUM OF 95% STANDARD PROCTOR DENSITY.
4. WORK FALLING UNDER THE JURISDICTION OF THE INDIANA DEPARTMENT OF TRANSPORTATION (INDOT) SHALL UTILIZE COMPACTED GRANULAR BACKFILL MATERIAL FOR INITIAL AND FINAL BACKFILL ANYWHERE WITHIN 12 FEET OF (INCLUDING BOTH HARD SURFACED AND COMPACTED AGGREGATE). COMPACTED GRANULAR BACKFILL MATERIAL SHALL BE USED WITHIN 5 FEET OF THE EDGE OF THE PAVEMENT.

TRENCH DETAIL METHOD "B" FOR FLEXIBLE PIPE (PVC, RPVC,HDPE) RIGID (DI,RCP,STL.) SUBJECTED TO VEHICULAR TRAFFIC

6

NO SCALE

For Public Viewing Only - Not For Downloading

COMMONWEALTH ENGINEERS, INC.
A wealth of resources to master a common goal.
https://commonwealthengineers.com/
OFFICE LOCATIONS IN:
INDIANAPOLIS, IN. (2)
EVANSVILLE, IN.
FORT WAYNE, IN.
CROWN POINT, IN.
BOWLING GREEN, KY.
SOUTH BEND, IN.

JEFF T. LASALLE
REGISTERED
No. 12200746
STATE OF INDIANA
PROFESSIONAL ENGINEER

Signature 5/01/25 Date

TOWN OF OSGOOD
RIPLEY COUNTY, INDIANA

2025 COMMUNITY CROSSINGS MATCHING GRANT (CCMG) ROUND 1 STREET IMPROVEMENTS

© 2025 BY COMMONWEALTH ENGINEERS, INC.-ALL RIGHTS RESERVED. REPRODUCTION BY ANY METHOD IN WHOLE OR IN PART WITHOUT PERMISSION IS PROHIBITED

Indiana811 Know what's below. Call before you dig.
1-800-382-5544 (ITS THE LAW)

No.	Submittal / Revision	By	Date

Designed By:	Drawn By:	Checked By:
ITV	JTL	RLM
Issue Date: 5/01/2025	Project No: H25019	Scale: AS SHOWN

MISCELLANEOUS DETAILS

Drawing No:

MD1

Sheet: 28 OF 33

File: Z:\SHAREDIN CLIENTS M:\OSGOOD\D H25019 2025-R1 CCMG\06 CAD\A CURRENT FILES\01 DRAWINGS\B SHEET FILES\PLAN SHEETS.DWG
Saved: 5/1/2025 11:32:48 AM Plotted: 5/1/2025 11:43:50 AM Current User: Ignacio Veloz, E Last Saved By: ivelez

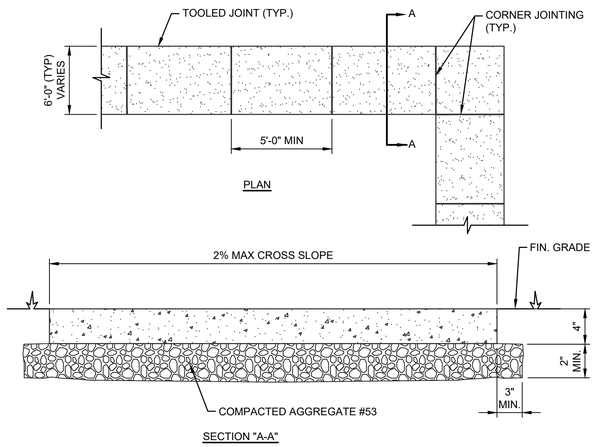

GENERAL NOTES:

1. TRANSVERSE JOINTS SHALL BE CUT WITH A JOINTER HAVING A RADIUS OF ¼" AT SPACING AT A MINIMUM OF 6'-0"
2. SIDEWALK SHALL BE 4" THICK WITH 2" OF COMPACTED AGGREGATE No. 53 AT ALL DRIVEWAY CROSSINGS
3. SIDE SLOPE SHALL COMPLY WITH ADA REGULATIONS.

1 CONCRETE SIDEWALK DETAIL

SCALE: 1"=5'-0"

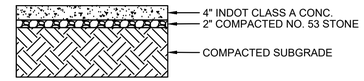

2 SIDEWALK PAVEMENT SECTION

SCALE: 1"=5'-0"

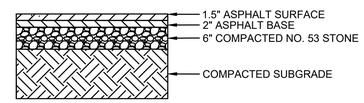

3 ON-STREET PARKING

SCALE: 1"=5'-0"

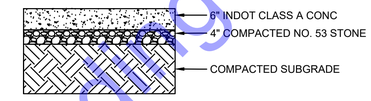

4 CONCRETE DRIVE ENTRANCE

SCALE: 1"=5'-0"

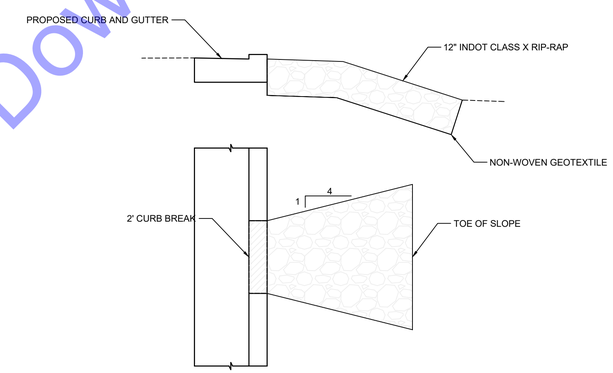

5 CURB BREAK AND SPLASH PAD

NTS

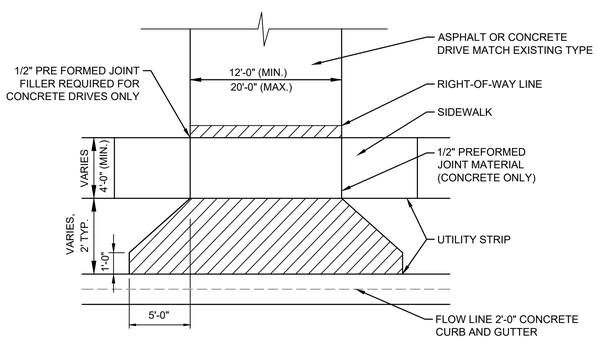

1. CROSS HATCHED AREAS SHALL BE EITHER 6" CONCRETE ON COMPACTED AGGREGATE BASE No. 53 OR 1 1/2" HMA SURFACE TYPE 'A' ON 2 1/2" INTERMEDIATE TYPE 'A' ON 6" COMPACTED AGGREGATE BASE No. 53 EXTENDING TO THE SIDEWALK OR R/W LINE WHICHEVER IS NEAREST TO THE ROADWAY.
2. SUBGRADE UNDER ALL CURBS, SIDEWALKS AND DRIVES SHALL BE COMPACTED TO A MINIMUM 95%.
3. SIDEWALKS SHALL BE CONSTRUCTED IN ACCORDANCE WITH THE APPROPRIATE STANDARD AND SHALL BE CONTINUOUS ACROSS DRIVEWAY.

6 RESIDENTIAL DRIVEWAY DETAIL

NTS

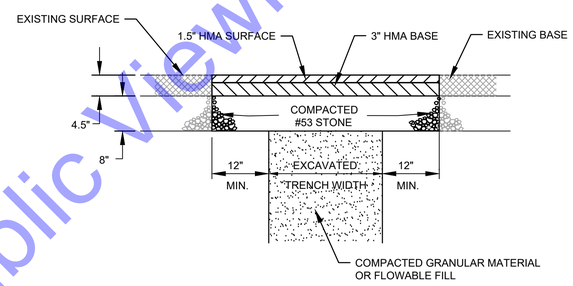

7 SURFACE RESTORATION DETAIL FOR ASPHALT PAVEMENT - DRIVEWAY

SCALE: 1"=5'-0"

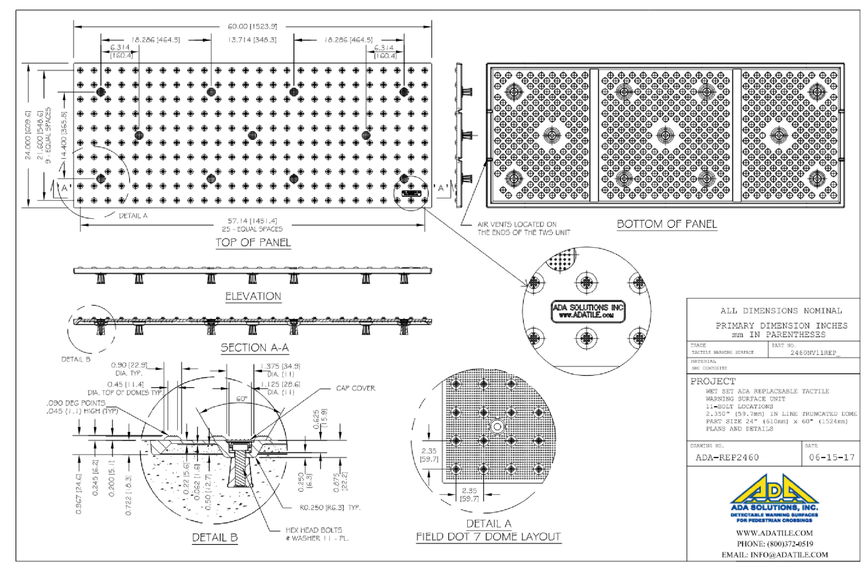

8 DETECTABLE WARNING SURFACE

For Public Viewing Only - Not For Downloading

COMMONWEALTH ENGINEERS, INC.
A wealth of resources to master a common goal.
https://commonwealthengineers.com/
OFFICE LOCATIONS IN:
INDIANAPOLIS, IN. (2)
EVANSVILLE, IN.
FORT WAYNE, IN.
CROWN POINT, IN.
BOWLING GREEN, KY.
SOUTH BEND, IN.

JEFF T. LASALLE
REGISTERED No. 12200746 STATE OF INDIANA
PROFESSIONAL ENGINEER

Signature 5/01/25 Date

TOWN OF OSGOOD
RIPLEY COUNTY, INDIANA

2025 COMMUNITY CROSSINGS MATCHING GRANT (CCMG) ROUND 1 STREET IMPROVEMENTS

© 2025 BY COMMONWEALTH ENGINEERS, INC. ALL RIGHTS RESERVED. REPRODUCED BY ANY METHOD IN WHOLE OR IN PART WITHOUT PERMISSION IS PROHIBITED

Indiana811 Know what's below. Dig safely. 1-800-382-5544 (ITS THE LAW)

No.	Submittal Revision	By	Date

Designed By:	Drawn By:	Checked By:
ITV	JTL	RLM
Issue Date: 5/01/2025	Project No: H25019	Scale: AS SHOWN

MISCELLANEOUS DETAILS

Drawing No: **MD2**

Sheet: 29 OF 33

File: Z:\SHAREDIN CLIENTS M-Z\OSGOOD\OSGOOD H25019 2025-R1 CCMG\06 CADA CURRENT FILES\01 DRAWINGS\B SHEET FILES\PLAN SHEETS.DWG
Saved: 5/1/2025 11:32:48 AM Plotted: 5/1/2025 11:43:56 AM Current User: ignacio.Vasquez, EI LastSavedBy: vatcz

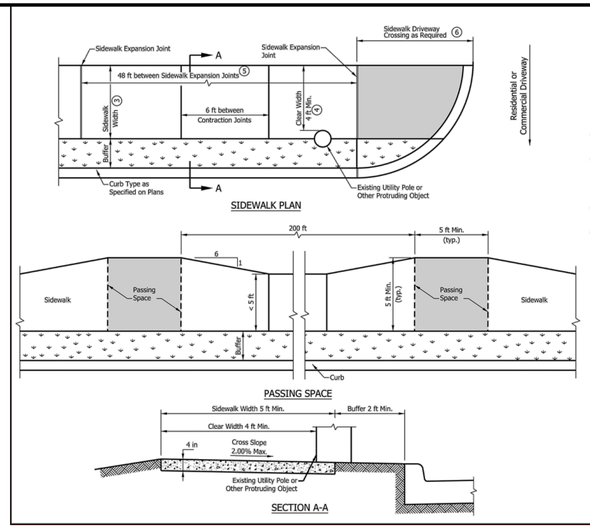

NOTES:

1. All slopes are absolute rather than relative to the sidewalk or roadway grade. Slopes at least 0.50% less than the maximum are preferred.
2. The grade of the sidewalk is measured in the direction of pedestrian travel. The grade of the sidewalk shall not exceed the grade of the adjacent roadway. The cross slope is measured perpendicular to the direction of pedestrian travel. The cross slope of the sidewalk shall not exceed 2.00%.
3. Where there is a buffer between the sidewalk and curb, the preferred minimum sidewalk clear width is 5 ft.
4. A 4-ft minimum clear width shall be provided adjacent to street furniture, mailbox, utility pole, or other protruding object. Where the sidewalk clear width is less than 5 ft, a passing space shall be provided at 200 ft intervals. The passing space minimum clear dimension shall be 5 ft x 5 ft.
5. See Standard Drawing E 604-CCSJ-01 for sidewalk expansion joint details.
6. See Standard Drawing E 604-SDWK-03 for sidewalk driveway crossing configurations.

INDIANA DEPARTMENT OF TRANSPORTATION

SIDEWALK DETAILS
SIDEWALK WITH BUFFER

SEPTEMBER 2016

STANDARD DRAWING NO. E 604-SDWK-01

ELIZABETH W. PHILLIPS REGISTERED No. 10200124 STATE OF INDIANA PROFESSIONAL ENGINEER

/s/ Elizabeth W. Phillips 03/16/16
DESIGN STANDARDS ENGINEER DATE

/s/ Mark A. Miller 03/18/16
CHIEF ENGINEER DATE

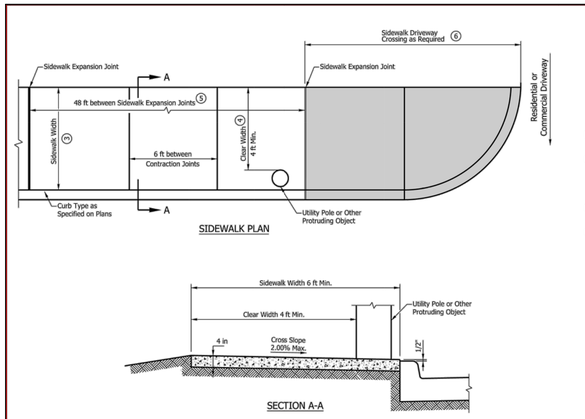

NOTES:

1. All slopes are absolute rather than relative to the sidewalk or roadway grade. Slopes at least 0.50% less than the maximum are preferred.
2. The grade of the sidewalk is measured in the direction of pedestrian travel. The grade of the sidewalk shall not exceed the grade of the adjacent roadway. The cross slope is measured perpendicular to the direction of pedestrian travel. The cross slope of the sidewalk shall not exceed 2.00%.
3. Where there is no buffer between the sidewalk and curb, the preferred minimum sidewalk width is 6 ft.
4. A 4-ft minimum clear width shall be provided adjacent to street furniture, mailbox, utility pole, or other protruding object. Where the sidewalk clear width is less than 5 ft, a passing space shall be provided at 200 ft intervals. See Standard Drawing E 604-SDWK-01 for sidewalk passing space details.
5. See Standard Drawing E 604-CCSJ-01 for sidewalk expansion joint details.
6. See Standard Drawing E 604-SDWK-03 for sidewalk driveway crossing configurations.

INDIANA DEPARTMENT OF TRANSPORTATION

SIDEWALK DETAILS
SIDEWALK ADJACENT TO CURB

SEPTEMBER 2016

STANDARD DRAWING NO. E 604-SDWK-02

ELIZABETH W. PHILLIPS REGISTERED No. 10200124 STATE OF INDIANA PROFESSIONAL ENGINEER

/s/ Elizabeth W. Phillips 03/16/16
DESIGN STANDARDS ENGINEER DATE

/s/ Mark A. Miller 03/18/16
CHIEF ENGINEER DATE

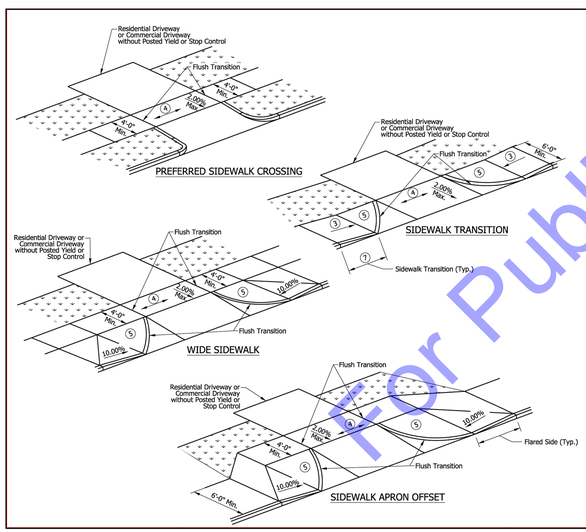

NOTES:

1. All slopes are absolute rather than relative to the sidewalk or roadway grade. Slopes at least 0.50% less than the maximum are preferred.
2. A sidewalk driveway crossing shall only be used on a sidewalk at a residential driveway or a commercial driveway without posted yield or stop control. A curb ramp shall be used at all other crossings. See Standard Drawing Series E 604-SWCR for curb ramp details.
3. Where a sidewalk transition is used to lower or raise the sidewalk to connect with a residential driveway or commercial driveway without posted yield or stop control, the running slope of the transition shall be 8.33% maximum.
4. The grade of the sidewalk across the driveway shall not exceed the grade of the adjacent roadway.
5. The area between the driveway and a flared side or sidewalk transition shall match the driveway profile and transverse slope.
6. A turning space is not required at the top of a sidewalk transition.
7. Objects such as a utility cover, vault frame, and grating shall be placed outside a sidewalk transition.
8. A detectable warning surface shall not be placed at the crossings of a residential driveway. A detectable warning surface may be placed at the crossing of a commercial driveway without yield or stop control.
9. See Standard Drawing E 604-SDWK-01 and -02 for Sidewalk Details.
10. See Standard Drawing Series E 610-DRIV for drives.

INDIANA DEPARTMENT OF TRANSPORTATION

SIDEWALK DRIVEWAY CROSSING

SEPTEMBER 2016

STANDARD DRAWING NO. E 604-SDWK-03

ELIZABETH W. PHILLIPS REGISTERED No. 10200124 STATE OF INDIANA PROFESSIONAL ENGINEER

/s/ Elizabeth W. Phillips 03/16/16
DESIGN STANDARDS ENGINEER DATE

/s/ Mark A. Miller 03/18/16
CHIEF ENGINEER DATE

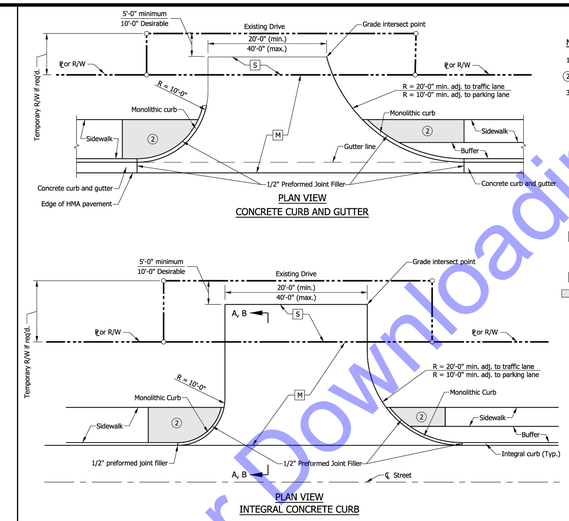

NOTES:

1. See Standard Drawing E 610-DRIV-09 for Section A-A, and Section B-B.
2. See Standard Drawing E 604-SDWK-03 for sidewalk driveway crossing details.
3. See Standard Drawing E 610-DRIV-14 for joint placement, monolithic curb, and concrete curb and gutter details.

LEGEND

M PCCP for Approaches, 9 in., on Dense Graded Subbase, 6 in., on Geogrid Type 1B, on Subgrade Treatment Type II (6 in. Coarse Aggregate No. 53)

S For type and thickness equivalent to surface in place, see plans.

Sidewalk elevation transitions.

INDIANA DEPARTMENT OF TRANSPORTATION

CLASS III DRIVE
(COMMERCIAL)

SEPTEMBER 2019

STANDARD DRAWING NO. E 610-DRIV-04

ELIZABETH W. PHILLIPS REGISTERED No. 10200124 STATE OF INDIANA PROFESSIONAL ENGINEER

5/1/2019
DESIGN STANDARDS ENGINEER DATE

6/5/2019
CHIEF ENGINEER DATE

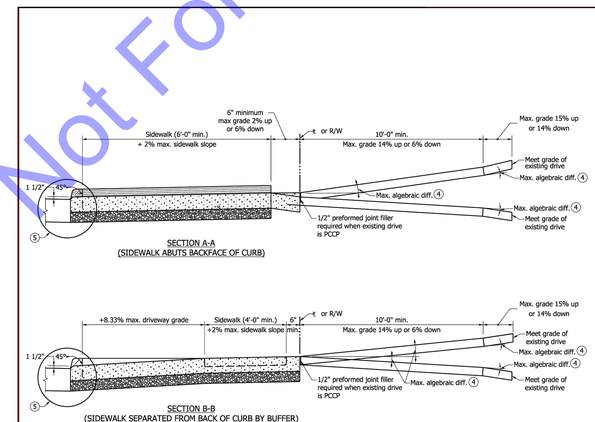

NOTES:

1. See Standard Drawing E 610-DRIV-02 Class I Drive pavement section.
2. See Standard Drawing E 610-DRIV-04 Class III Drive pavement section.
3. See Standard Drawing E 604-SDWK-03 for sidewalk driveway crossing details.
4. The maximum algebraic difference in grades shall not exceed 8% for crested grade nor 12% for sagged grade
5. See Standard Drawing E 610-DRIV-14 joint placement, monolithic curb, and concrete curb and gutter details.

LEGEND

= Curb ramp or sidewalk elevation transition.

= PCCP

INDIANA DEPARTMENT OF TRANSPORTATION

CLASS I AND CLASS III DRIVE
APPROACH GRADES

SEPTEMBER 2019

STANDARD DRAWING NO. E 610-DRIV-09

ELIZABETH W. PHILLIPS REGISTERED No. 10200124 STATE OF INDIANA PROFESSIONAL ENGINEER

5/29/2019
DESIGN STANDARDS ENGINEER DATE

6/5/2019
CHIEF ENGINEER DATE

INDEX

SHEET NO.	SUBJECT
1	Curb Ramp Drawing Index and General Notes
2-3	Perpendicular Curb Ramp Typical Placement
4	Perpendicular Curb Ramp Component Details
5	One-Way-Directional Perpendicular Curb Ramp Typical Placement
6	One-Way-Directional Perpendicular Curb Ramp Component Details
7	Parallel Curb Ramps Typical Placement
8	Parallel Curb Ramp Component Details
9	Blended Transition Curb Ramp, Depressed Curb Ramp and Diagonal Curb Ramp Typical Placement
10	Blended Transition Curb Ramp Component Details
11	Median Cut-Through and Median Perpendicular Curb Ramp Typical Placement
12-13	Detectable Warning Surface Placement and Configuration
14	Detectable Warning Surface Details

GENERAL NOTES:

1. All slopes are absolute rather than relative to the sidewalk or roadway grade. Slopes at least 0.50% less than the maximum are preferred.
2. Ramp or Blended Transition. A ramp or blended transition shall be used to lower or raise the sidewalk to connect with the street or highway.
3. Turning Space. A turning space shall be provided at the top of a perpendicular ramp, bottom of a parallel ramp, or where the pedestrian travel requires a change in direction. A common turning space may be shared by adjacent ramps. The turning space shall have a minimum clear dimension of 4 ft x 4 ft. Where the turning space is constrained at the back of the sidewalk by a curb, retaining wall, building, or feature over 2 inches in height, the minimum clear dimension shall be 4 ft x 5 ft, with the 5-ft dimension in the direction of the ramp running slope.
4. Flared Side. A flared side shall be used adjacent to a walkable surface. A flared side may be used adjacent to a non-walkable surface. A flared side shall have a maximum slope of 10.00% measured parallel to the back of the curb.
5. Return Curb. A return curb is placed perpendicular to the roadway curb. A return curb may be used adjacent to a non-walkable surface. A return curb shall not be used adjacent to a walkable surface. The return curb may be omitted where the non-walkable surface is flared and the curb adjacent the roadway is tapered to meet the flush curb at the bottom of the ramp.
6. Clear Space. A clear space shall be provided beyond the bottom grade break of a curb ramp wholly contained within the crosswalk and wholly outside the parallel vehicular travel path. The clear space shall have a minimum clear dimension of 4 ft x 4 ft.
7. Detectable Warning Surface. A detectable warning surface shall consist of truncated domes and be placed at each street, highway, or railroad crossing. The detectable warning surface shall extend a minimum of 2 ft in the direction of pedestrian travel and be placed the entire width of a ramp, blended transition, or turning space.
8. Running Slope. The running slope of a ramp, blended transition, or turning space shall be measured parallel to the direction of pedestrian travel.
   a. A running slope of 2.00% or less is considered level.
   b. A ramp shall have a maximum running slope of 8.33% but shall not require a ramp length to exceed 15 ft.
   c. A blended transition shall have a maximum running slope of 5.00%.
   d. A turning space shall have a maximum running slope of 2.00%.
9. Width. Unless otherwise noted, minimum width of a ramp, blended transition, or turning space, excluding flared sides or return curb, shall be 4 ft.
10. Grade Break. A grade break at the top and bottom of a ramp, blended transition, or turning space shall be perpendicular to the running slope. Grade breaks shall not be within the ramp, blended transition, turning space, or detectable warning surface. Grade breaks shall be flush. Vertical discontinuities shall not be greater than 1/2 in. Where a discontinuity is greater than 1/4 in. the surface shall be beveled with a slope not steeper than 1V:2H.
11. Cross Slope Exceptions. The cross slope of a ramp, blended transition, or turning space shall be measured perpendicular to the direction of pedestrian travel.
   a. The maximum cross slope at a pedestrian street crossing without posted yield or stop control shall be 5.00%.
   b. The maximum cross slope at a pedestrian street crossing with posted yield or stop control shall be 2.00%.
   c. The maximum cross slope at a mixblock crossing shall be the established grade of the adjacent roadway.
12. Counter Slope. A counter slope is the cross slope of the gutter or street adjacent the running slope of the ramp, blended transition, or turning space. See Standard Drawing E 604-SWCR-14 for counter slope details.
13. Objects such as a utility cover, vault frame, and grating shall be placed outside the curb ramp.
14. Curb ramps shall be placed within the marked crosswalk area.
15. Drainage inlets should be located uphill from a curb ramp to prevent ponding in the path of pedestrian travel.

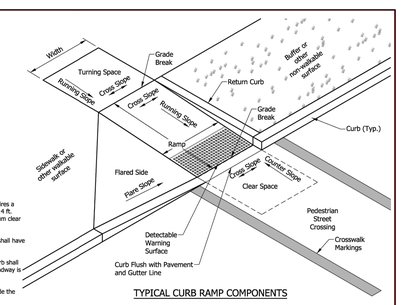

TYPICAL CURB RAMP COMPONENTS

INDIANA DEPARTMENT OF TRANSPORTATION

CURB RAMP DRAWING INDEX
AND GENERAL NOTES

SEPTEMBER 2018

STANDARD DRAWING NO. E 604-SWCR-01

ELIZABETH W. PHILLIPS REGISTERED No. 10200124 STATE OF INDIANA PROFESSIONAL ENGINEER

/s/ Elizabeth W. Phillips 03/20/18
DESIGN STANDARDS ENGINEER DATE

/s/ John Lackie 04/25/18
CHIEF ENGINEER DATE

For Public Viewing Only - Not For Download

COMMONWEALTH ENGINEERS, INC.
A wealth of resources to master a common goal.
https://commonwealthengineers.com/
OFFICE LOCATIONS IN:
INDIANAPOLIS, IN. (2)
EVANSVILLE, IN.
FORT WAYNE, IN.
CROWN POINT, IN.
BOWLING GREEN, KY.
SOUTH BEND, IN.

JEFF T. LASHLEE REGISTERED No. 12200746 STATE OF INDIANA PROFESSIONAL ENGINEER

Signature 5/01/25 Date

TOWN OF OSGOOD
RIPLEY COUNTY, INDIANA

2025 COMMUNITY CROSSINGS MATCHING GRANT (CCMG) ROUND 1 STREET IMPROVEMENTS

© 2025 BY COMMONWEALTH ENGINEERS, INC. ALL RIGHTS RESERVED. REPRODUCED BY ANY METHOD IN WHOLE OR IN PART WITHOUT PERMISSION IS PROHIBITED

Indiana811 Know what's below. Call before you dig.
1-800-382-5544 (ITS THE LAW)

No.	Submittal Revision	By	Date

Designed By:	Drawn By:	Checked By:
ITV	JTL	RLM
Issue Date: 5/01/2025	Project No: H25019	Scale: AS SHOWN

MISCELLANEOUS DETAILS

Drawing No:
MD3

Sheet: 30 OF 33

File: Z:\SHAREDIVN CLIENTS M-Z\OSGOOD\OSGOOD H25019 2025-R1 CCMG\06 CADA\CURRENT FILES\01 DRAWINGS\B SHEET FILES\PLAN SHEETS.DWG
Saved: 5/1/2025 11:32:49 AM Plotted: 5/1/2025 11:44:39 AM Current User: ignacio.Vasquez, Eli LastSavedBy: vatcz

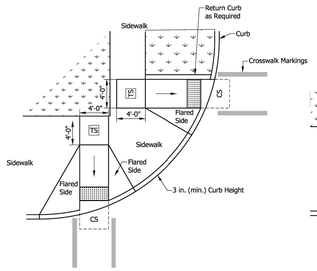

PAIRED PERPENDICULAR CURB RAMPS AT LARGE RADIUS

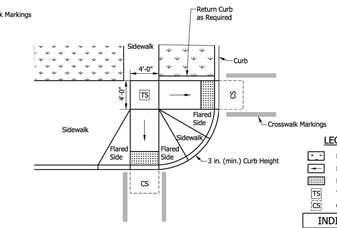

PAIRED PERPENDICULAR CURB RAMPS AT SMALL RADIUS

NOTE:

1. The turning space shall have a minimum clear dimension of 4 ft x 4 ft and a running slope of 2.00% maximum. Where the turning space is constrained at the back of the sidewalk, the minimum clear dimension shall be 4 ft x 5 ft, with the 5-ft dimension in the direction of the ramp running slope.

LEGEND:

- Buffer or Other Non-Walkable Surface
- Ramp
- Detectable Warning Surface
- TS Turning Space
- CS Clear Space

INDIANA DEPARTMENT OF TRANSPORTATION

PAIRED PERPENDICULAR CURB RAMPS
TYPICAL PLACEMENT

SEPTEMBER 2016

STANDARD DRAWING NO. E 604-SWCR-03

ELIZABETH W. PHILLIPS REGISTERED No. 10200124 STATE OF INDIANA PROFESSIONAL ENGINEER

/s/ Elizabeth W. Phillips 03/15/16 DESIGN STANDARDS ENGINEER DATE

/s/ Mark A. Miller 03/18/16 CHIEF ENGINEER DATE

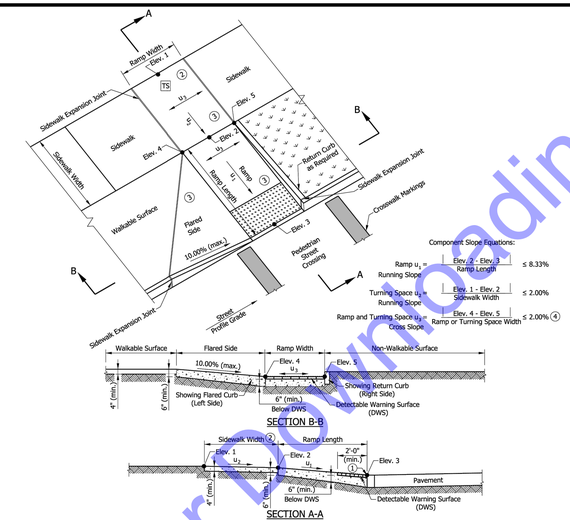

NOTES:

1. The bottom edge of the ramp and top of curb shall be flush with the edge of adjacent pavement and gutter line.
2. The turning space shall have a minimum clear dimension of 4 ft x 4 ft. Where the turning space is constrained at the back of the sidewalk, the minimum clear dimension shall be 4 ft x 5 ft, with the 5-ft dimension in the direction of the ramp running slope. Where a tiered perpendicular curb ramp is used, a constrained turning space shall have a minimum clear dimension of 5 ft x 5 ft.
3. Curb ramp surface shall be coarse broomed transverse to the running slope.
4. See Standard Drawing E 604-SWCR-01 for cross slope exceptions.
5. See Standard Drawing E 604-SWCR-12, -13, and -14 for Detectable Warning Surface placement, configuration, and details.
6. See Standard Drawing E 604-CCSJ-01 for sidewalk expansion joint details.

LEGEND:

- Buffer or Other Non-Walkable Surface
- Ramp
- Detectable Warning Surface
- TS Turning Space

INDIANA DEPARTMENT OF TRANSPORTATION

PERPENDICULAR CURB RAMP
COMPONENT DETAILS

SEPTEMBER 2018

STANDARD DRAWING NO. E 604-SWCR-04

ELIZABETH W. PHILLIPS REGISTERED No. 10200124 STATE OF INDIANA PROFESSIONAL ENGINEER

/s/ Elizabeth W. Phillips 03/29/18 DESIGN STANDARDS ENGINEER DATE

/s/ John Leckie 04/25/18 CHIEF ENGINEER DATE

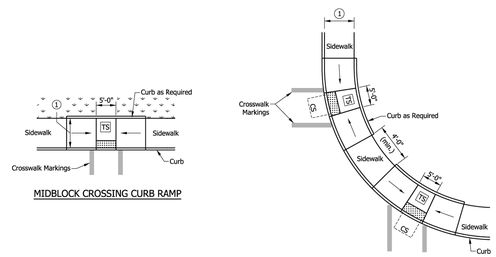

MIDBLOCK CROSSING CURB RAMP

PAIRED PARALLEL CURB RAMPS ALONG LARGE RADIUS

NOTES:

1. Where there is no buffer between the sidewalk and curb the preferred minimum sidewalk width is 6 ft. Where a buffer is placed between the sidewalk and curb, the preferred minimum sidewalk width is 5 ft. See Standard Drawing Series E 604-SDWK for sidewalk details.
2. The turning space shall have a minimum clear dimension of 4 ft x 4 ft and a running slope of 2.00% maximum. Where the turning space is constrained at the back of the sidewalk, the minimum clear dimension shall be 4 ft x 5 ft, with the 5-ft dimension in the direction of the ramp running slope.

LEGEND:

- Buffer or Other Non-Walkable Surface
- Ramp
- Detectable Warning Surface
- TS Turning Space
- CS Clear Space

INDIANA DEPARTMENT OF TRANSPORTATION

PAIRED PARALLEL CURB RAMPS AND
MIDBLOCK CROSSING CURB RAMP
TYPICAL PLACEMENT
SEPTEMBER 2016

STANDARD DRAWING NO. E 604-SWCR-07

ELIZABETH W. PHILLIPS REGISTERED No. 10200124 STATE OF INDIANA PROFESSIONAL ENGINEER

/s/ Elizabeth W. Phillips 03/15/16 DESIGN STANDARDS ENGINEER DATE

/s/ Mark A. Miller 03/18/16 CHIEF ENGINEER DATE

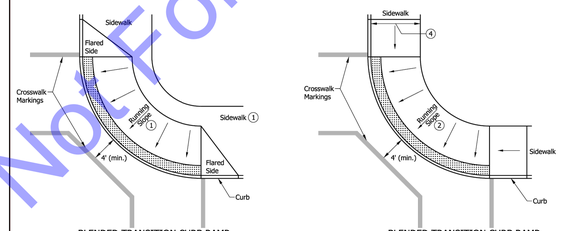

BLENDED TRANSITION CURB RAMP WITH RUNNING SLOPE > 2.00%

BLENDED TRANSITION CURB RAMP WITH RUNNING SLOPE ≤ 2.00%

NOTES:

1. Where the running slope is greater than 2.00%, a 4-ft minimum sidewalk shall continue behind the blended transition. The running slope shall not exceed 5.00%.
2. Where the running slope is less than or equal to 2.00% a 4-ft minimum sidewalk is not required behind the blended transition.
3. A diagonal curb ramp shall not be used for new construction. For an alteration project, a diagonal curb ramp shall be used only where existing physical conditions prevent paired curb ramps, a blended transition curb ramp, or a depressed corner curb ramp from being provided.
4. Where there is no buffer between the sidewalk and curb the preferred minimum sidewalk width is 6 ft. Where a buffer is placed between the sidewalk and curb, the preferred minimum sidewalk width is 5 ft. See Standard Drawing Series E 604-SDWK for sidewalk details.

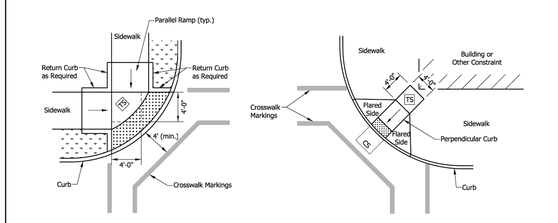

DEPRESSED CORNER CURB RAMP

DIAGONAL CURB RAMP 3

LEGEND:

- Buffer or Other Non-Walkable Surface
- Ramp
- Detectable Warning Surface
- TS Turning Space
- CS Clear Space

INDIANA DEPARTMENT OF TRANSPORTATION

BLENDED TRANSITION CURB RAMP,
DEPRESSED CURB RAMP AND DIAGONAL
CURB RAMP TYPICAL PLACEMENT
SEPTEMBER 2018

STANDARD DRAWING NO. E 604-SWCR-09

ELIZABETH W. PHILLIPS REGISTERED No. 10200124 STATE OF INDIANA PROFESSIONAL ENGINEER

/s/ Elizabeth W. Phillips 03/29/18 DESIGN STANDARDS ENGINEER DATE

/s/ John Leckie 04/25/18 CHIEF ENGINEER DATE

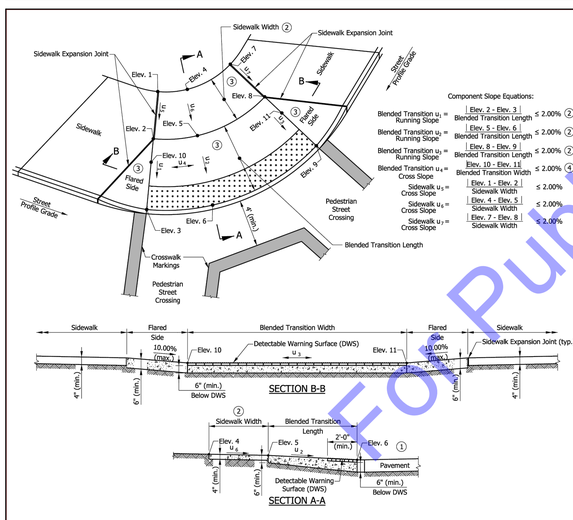

NOTES:

1. The bottom edge of the blended transition and top of curb shall be flush with the edge of adjacent pavement and gutter line.
2. Where the running slope is less than or equal to 2.00% a 4-ft minimum sidewalk is not required, behind the blended transition. Where the running slope is greater than 2.00%, a 4-ft minimum sidewalk shall continue behind the blended transition and the running slope shall not exceed 5.00%.
3. Curb ramp surface shall be coarse broomed transverse to the running slope.
4. See Standard Drawing E 604-SWCR-01 for cross slope exceptions.
5. See Standard Drawing E 604-SWCR-12, -13, and -14 for Detectable Warning Surface placement, configuration, and details.
6. See Standard Drawing E 604-CCSJ-01 for sidewalk expansion joint details.

LEGEND:

- Ramp
- Detectable Warning Surface

INDIANA DEPARTMENT OF TRANSPORTATION

BLENDED TRANSITION CURB RAMP
COMPONENT DETAILS

SEPTEMBER 2018

STANDARD DRAWING NO. E 604-SWCR-10

ELIZABETH W. PHILLIPS REGISTERED No. 10200124 STATE OF INDIANA PROFESSIONAL ENGINEER

/s/ Elizabeth W. Phillips 03/29/18 DESIGN STANDARDS ENGINEER DATE

/s/ John Leckie 04/25/18 CHIEF ENGINEER DATE

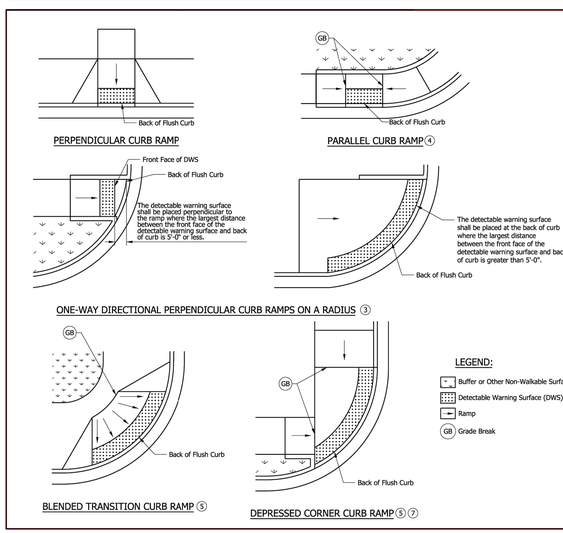

NOTES:

1. A detectable warning surface shall be placed at each street, highway, or railroad crossing. See Standard Drawing E 604-SDWK-03 for a detectable warning surface placement at a sidewalk driveway crossing.
2. The detectable warning surface shall extend a minimum of 2 ft in the direction of pedestrian travel and extend the full width as shown. The detectable warning surface shall not be placed across a grade break.
3. Where the distance from the face of the detectable warning surface is 5 ft or less from the back of curb, the detectable warning surface shall be placed perpendicular to the ramp. Where the distance from the face of the detectable warning surface is more than 5 ft from the back of curb, the detectable warning surface shall be placed at the back of curb as shown or in an alternate placement configuration. See Standard Drawing E 604-SWCR-13 for alternate detectable warning surface placement.
4. The detectable warning surface on a parallel curb ramp shall be placed on the turning space at the flush transition between the street and turning space at the back of curb.
5. The detectable warning surface on a blended transition or depressed corner shall be placed at the back of curb as shown or in an alternate placement configuration. See Standard Drawing E 604-SWCR-13 for alternate detectable warning surface placement.
6. See Standard Drawing E 604-SWCR-14 for detectable warning surface details.

LEGEND:

- Buffer or Other Non-Walkable Surface
- Detectable Warning Surface (DWS)
- Ramp
- GB Grade Break

INDIANA DEPARTMENT OF TRANSPORTATION

DETECTABLE WARNING SURFACE
PLACEMENT AND CONFIGURATION

SEPTEMBER 2018

STANDARD DRAWING NO. E 604-SWCR-12

ELIZABETH W. PHILLIPS REGISTERED No. 10200124 STATE OF INDIANA PROFESSIONAL ENGINEER

/s/ Elizabeth W. Phillips 03/29/18 DESIGN STANDARDS ENGINEER DATE

/s/ John Leckie 04/25/18 CHIEF ENGINEER DATE

For Public Viewing Only - Not For Bidding

COMMONWEALTH ENGINEERS, INC.
A wealth of resources to master a common goal.
https://commonwealthengineers.com/
OFFICE LOCATIONS IN:
INDIANAPOLIS, IN. (2)
EVANSVILLE, IN.
FORT WAYNE, IN.
CROWN POINT, IN.
BOWLING GREEN, KY.
SOUTH BEND, IN.

JEFF T. LASHLEE REGISTERED No. 12200746 STATE OF INDIANA PROFESSIONAL ENGINEER

Signature 5/01/25 Date

TOWN OF OSGOOD
RIPLEY COUNTY, INDIANA

2025 COMMUNITY
CROSSINGS MATCHING
GRANT (CCMG) ROUND 1
STREET IMPROVEMENTS

© 2025 BY COMMONWEALTH ENGINEERS, INC. ALL RIGHTS RESERVED. REPRODUCTION BY ANY METHOD IN WHOLE OR IN PART WITHOUT PERMISSION IS PROHIBITED

Indiana811 Know what's below. Call before you dig.
1-800-382-5544 (ITS THE LAW)

No.	Submittal / Revision	By	Date

Designed By:	Drawn By:	Checked By:
ITV	JTL	RLM
Issue Date: 5/01/2025	Project No: H25019	Scale: AS SHOWN

MISCELLANEOUS DETAILS

Drawing No: MD4

Sheet: 31 OF 33

File: Z:\SHAREDIN CLIENTS IN\OSGOODCD H25019\2025-R1 CCMG\06 CADA CURRENT FILES\01 DRAWING\SB SHEET FILES\PLAN SHEETS.DWG
Saved: 5/1/2025 11:32:48 AM Plotted: 5/1/2025 11:45:04 AM Current User: Ignacio Veloz, EI LastSavedBy: veloz

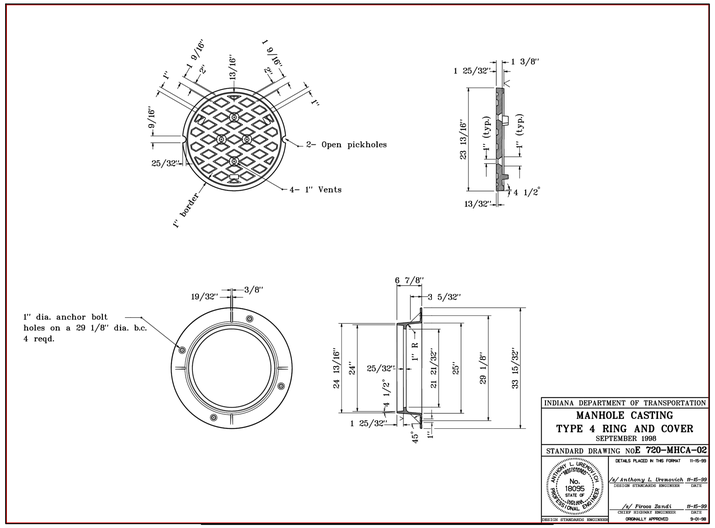

INDIANA DEPARTMENT OF TRANSPORTATION
MANHOLE CASTING
TYPE 4 RING AND COVER
SEPTEMBER 1998
STANDARD DRAWING NO. E 720-MHCA-02
DETAILS PLACED IN THIS FORMAT 11-15-99
/s/ Anthony L. Drewacik 11-15-99 DESIGN STANDARDS ENGINEER DATE
/s/ Firoz Zaidi 11-15-99 CHIEF ECONOMY ENGINEER DATE
ORIGINALLY APPROVED 9-01-98
DESIGN STANDARDS ENGINEER

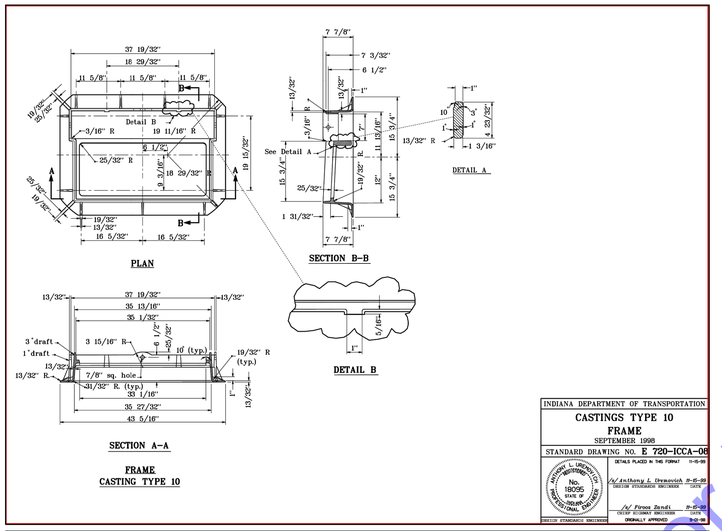

INDIANA DEPARTMENT OF TRANSPORTATION
CASTINGS TYPE 10
FRAME
SEPTEMBER 1998
STANDARD DRAWING NO. E 720-ICCA-08
DETAILS PLACED IN THIS FORMAT 11-15-99
/s/ Anthony L. Drewacik 11-15-99 DESIGN STANDARDS ENGINEER DATE
/s/ Firoz Zaidi 11-15-99 CHIEF ECONOMY ENGINEER DATE
ORIGINALLY APPROVED 9-01-98
DESIGN STANDARDS ENGINEER

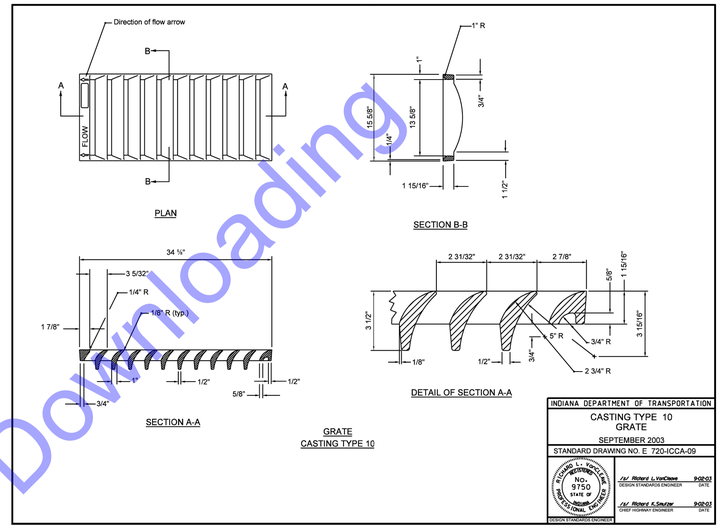

INDIANA DEPARTMENT OF TRANSPORTATION
CASTING TYPE 10
GRATE
SEPTEMBER 2003
STANDARD DRAWING NO. E 720-ICCA-09
/s/ Richard L. VanCleave 9-02-03 DESIGN STANDARDS ENGINEER DATE
/s/ Richard K. Snyder 9-02-03 CHIEF HIGHWAY ENGINEER DATE
DESIGN STANDARDS ENGINEER

GENERAL NOTES
1. Curb box adjustable 5 1/4" to 8 3/4".

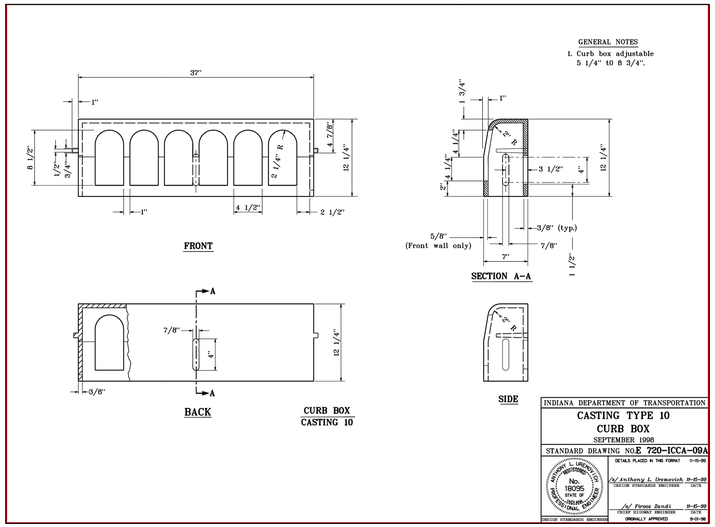

INDIANA DEPARTMENT OF TRANSPORTATION
CASTING TYPE 10
CURB BOX
SEPTEMBER 1998
STANDARD DRAWING NO. E 720-ICCA-09A
DETAILS PLACED IN THIS FORMAT 11-15-99
/s/ Anthony L. Drewacik 11-15-99 DESIGN STANDARDS ENGINEER DATE
/s/ Firoz Zaidi 11-15-99 CHIEF ECONOMY ENGINEER DATE
ORIGINALLY APPROVED 9-01-98
DESIGN STANDARDS ENGINEER

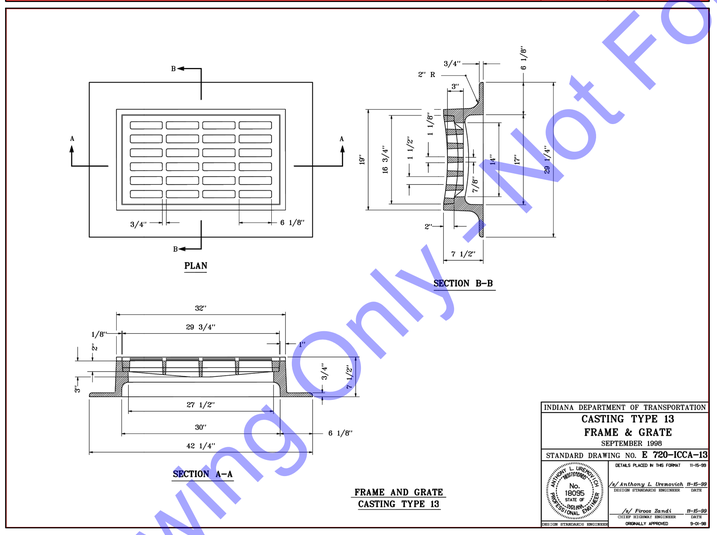

INDIANA DEPARTMENT OF TRANSPORTATION
CASTING TYPE 13
FRAME & GRATE
SEPTEMBER 1998
STANDARD DRAWING NO. E 720-ICCA-13
DETAILS PLACED IN THIS FORMAT 11-15-99
/s/ Anthony L. Drewacik 11-15-99 DESIGN STANDARDS ENGINEER DATE
/s/ Firoz Zaidi 11-15-99 CHIEF ECONOMY ENGINEER DATE
ORIGINALLY APPROVED 9-01-98
DESIGN STANDARDS ENGINEER

GENERAL NOTES
1. For eccentric and concentric cone heights see cone heights table on Standard Drawing E 720-MHST-08.

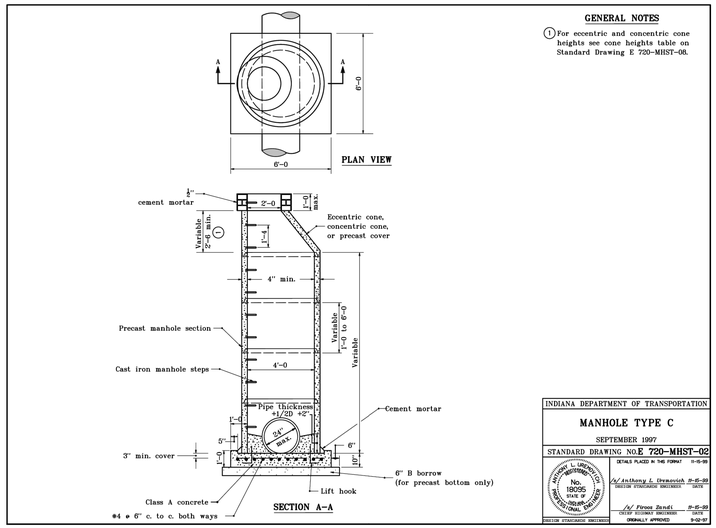

INDIANA DEPARTMENT OF TRANSPORTATION
MANHOLE TYPE C
SEPTEMBER 1997
STANDARD DRAWING NO. E 720-MHST-02
DETAILS PLACED IN THIS FORMAT 11-15-99
/s/ Anthony L. Drewacik 11-15-99 DESIGN STANDARDS ENGINEER DATE
/s/ Firoz Zaidi 11-15-99 CHIEF ECONOMY ENGINEER DATE
ORIGINALLY APPROVED 9-02-97
DESIGN STANDARDS ENGINEER

MANHOLE PIPE SIZES				
Type	G (in.)	F (ft. in.)	Maximum Pipe Size Rt. ∡ to Mainline (in.)	Maximum Pipe Size for Mainline (in.)
H	24 to 36		30	36
J	24 to 36	5'-0	30	36
K	36 to 48	6'-0	36	48
L	48 to 54	8'-0	48	54
M	54 to 72	8'-6	66	72
N	72 to 84	9'-0	72	84

NOTES
1. Drop pipe may be used with manholes Type H, J, K, L, M, or N. Such manhole shall be referred to as drop manholes type H, J, K, L, M, or N. For details of construction see Standard Drawing E 720-MHST-03.
2. See Standard Drawing E 720-MHST-06 for Details A, B, and C.
3. Manholes type C, D, E, or F may be substituted for manholes type H, J, K, L, M, or N. for comparable pipe sizes. See Standard Drawings E 720-MHST-02 and -04 for manholes type D, E, F, and G details.

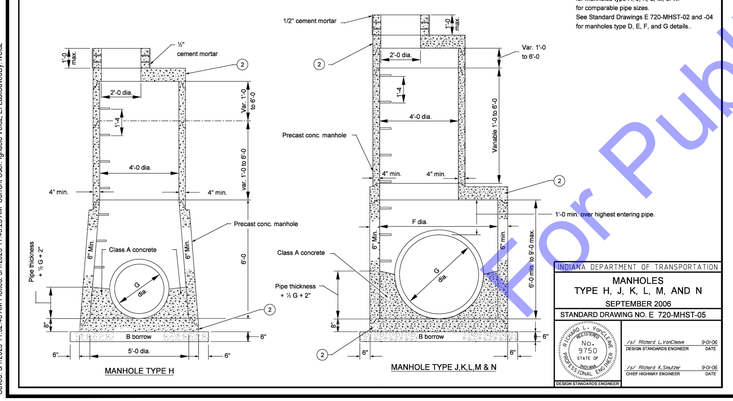

INDIANA DEPARTMENT OF TRANSPORTATION
MANHOLES
TYPE H, J, K, L, M, AND N
SEPTEMBER 2006
STANDARD DRAWING NO. E 720-MHST-05
/s/ Richard L. VanCleave 9-01-06 DESIGN STANDARDS ENGINEER DATE
/s/ Richard K. Snyder 9-01-06 CHIEF HIGHWAY ENGINEER DATE
DESIGN STANDARDS ENGINEER

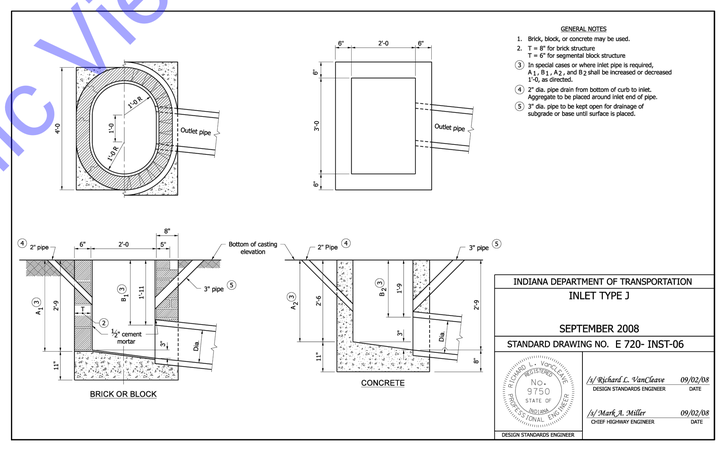

GENERAL NOTES
1. Brick, block, or concrete may be used.
2. T = 6" for brick structure
   T = 6" for segmental block structure
3. In special cases or where inlet pipe is required, A_1, B_1, A_2, and B_2 shall be increased or decreased 1'-0, as directed.
4. 2" dia. pipe drain from bottom of curb to inlet. Aggregate to be placed around inlet end of pipe.
5. 3" dia. pipe to be kept open for drainage of subgrade or base until surface is placed.

INDIANA DEPARTMENT OF TRANSPORTATION
INLET TYPE J
SEPTEMBER 2008
STANDARD DRAWING NO. E 720- INST-06
/s/ Richard L. VanCleave 09/02/08 DESIGN STANDARDS ENGINEER DATE
/s/ Mark A. Miller 09/02/08 CHIEF HIGHWAY ENGINEER DATE
DESIGN STANDARDS ENGINEER

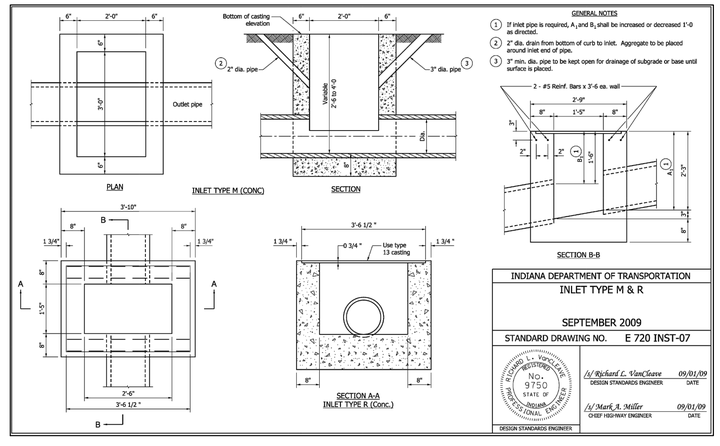

GENERAL NOTES
1. If inlet pipe is required, A_1 and B_1 shall be increased or decreased 1'-0 as directed.
2. 2" dia. drain from bottom of curb to inlet. Aggregate to be placed around inlet end of pipe.
3. 3" min. dia. pipe to be kept open for drainage of subgrade or base until surface is placed.

INDIANA DEPARTMENT OF TRANSPORTATION
INLET TYPE M & R
SEPTEMBER 2009
STANDARD DRAWING NO. E 720 INST-07
/s/ Richard L. VanCleave 09/01/09 DESIGN STANDARDS ENGINEER DATE
/s/ Mark A. Miller 09/01/09 CHIEF HIGHWAY ENGINEER DATE
DESIGN STANDARDS ENGINEER

For Public Viewing Only - Not For Downloading

COMMONWEALTH ENGINEERS, INC.
A wealth of resources to master a common goal.
https://commonwealthengineers.com/
OFFICE LOCATIONS IN:
INDIANAPOLIS, IN. (2)
EVANSVILLE, IN.
FORT WAYNE, IN.
CROWN POINT, IN.
BOWLING GREEN, KY.
SOUTH BEND, IN.

JEFF T. LASHLEE REGISTERED No. 12200746 STATE OF INDIANA PROFESSIONAL ENGINEER
Signature 5/01/25 Date

TOWN OF RIPLEY COUNTY, INDIANA
2025 COMMUNITY CROSSINGS MATCHING GRANT (CCMG) ROUND 1 STREET IMPROVEMENTS

© 2025 BY COMMONWEALTH ENGINEERS, INC. ALL RIGHTS RESERVED. REPRODUCED BY ANY METHOD IN WHOLE OR IN PART WITHOUT PERMISSION IS PROHIBITED

Indiana811 Know what's below. Dig safely. Call before you dig.
1-800-382-5544 (ITS THE LAW)

No.	Submittal / Revision	By	Date

Designed By:	Drawn By:	Checked By:
ITV	JTL	RLM
Issue Date: 5/01/2025	Project No: H25019	Scale: AS SHOWN

MISCELLANEOUS DETAILS

Drawing No: MD5

Sheet: 32 OF 33

File: Z:\SHAREDIN\ CLIENTS M-Z\OSGOOD\OD H25019 2025-R1 CCMG\06 OADA CURRENT FILES\01 DRAWINGS\B SHEET FILES\PLAN SHEETS.DWG
Saved: 5/1/2025 11:32:48 AM Plotted: 5/1/2025 11:45:25 AM Current User: ignacio.Veloz, EI LastSavedBy: veloz

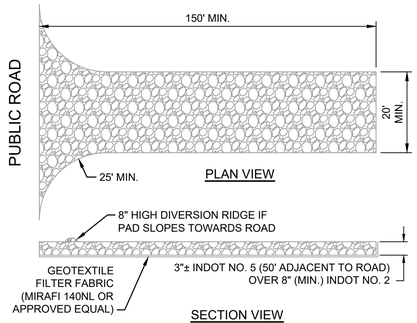

MAINTENANCE:

1. INSPECT DAILY, AND AFTER EACH STORM EVENT OR HEAVY USE.
2. RESHAPE AS NEEDED FOR DRAINAGE AND RUNOFF CONTROL.
3. TOPDRESS WITH CLEAN STONE AS REQUIRED. MAINTAIN MINIMUM DEPTH THROUGHOUT CONSTRUCTION.
4. IMMEDIATELY REMOVE MUD AND SEDIMENT TRACKED OR WASHED ONTO PUBLIC ROADS BY SWEEPING OR BRUSHING. (DO NOT FLUSH AREA WITH WATER UNLESS WATER IS CONVEYED TO SEDIMENT TRAP.)
5. REPAIR ANY BROKEN PAVEMENT IMMEDIATELY.

1 STABILIZED CONSTRUCTION ENTRANCE

SCALE: 1"=5'-0"

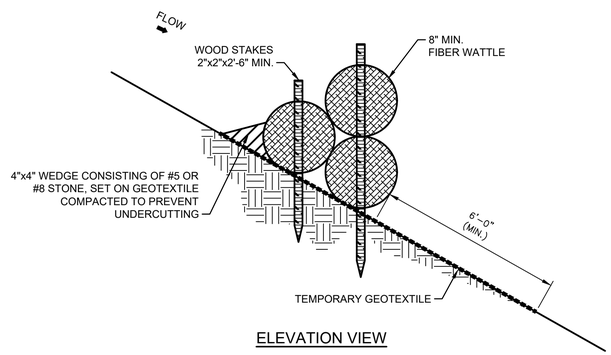

ELEVATION VIEW

2 ROLLED EROSION CONTROL PRODUCT DETAIL

SCALE: 1"=5'-0"

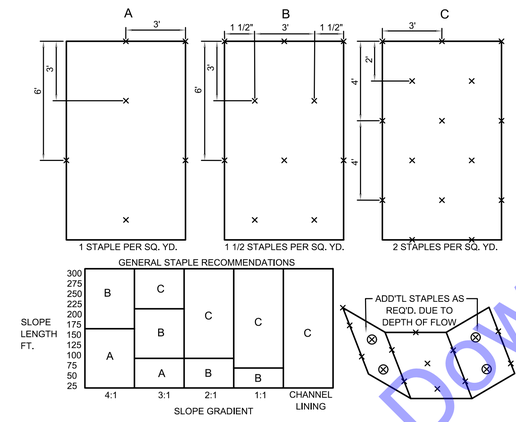

3 EROSION CONTROL BLANKET

SCALE: 1"=5'-0"

SPECIFICATIONS

EFFECTIVE LIFE

- THE FUNCTIONAL LIFE OF AN EROSION CONTROL BLANKET IS DEPENDENT ON THE MATERIALS USED.

ANCHORING

- STAPLES, PINS OR STAKES USED TO PREVENT MOVEMENT OR DISPLACEMENT OF BLANKET. (FOLLOW MANUFACTURER'S RECOMMENDATIONS FOR SPECIFIC APPLICATIONS.)

MATERIALS

- ORGANIC (STRAW, EXCELSIOR, WOVEN PAPER, COCONUT FIBER, ETC.) OR SYNTHETIC MULCH INCORPORATED WITH A POLYPROPYLENE, NATURAL FIBER OR SIMILAR NETTING MATERIAL. (THE NETTING MAY BE BIODEGRADABLE, PHOTODEGRADABLE OR PERMANENT.)

  NOTE: SOME EROSION CONTROL BLANKET NETTINGS MAY POSE A THREAT TO CERTAIN SPECIES OF WILDLIFE IF THEY BECOME ENTANGLED IN THE NETTING MATRIX.

- SIX TO 12-INCH STAPLES, PINS, OR STAKES.

INSTALLATION

1. SELECT THE TYPE AND WEIGHT OF EROSION CONTROL BLANKET TO FIT THE SITE CONDITIONS (E.G., SLOPE, CHANNEL FLOW VELOCITY) PER THE MANUFACTURER'S RECOMMENDATIONS.
2. PREPARE THE SEEDBED, ADD SOIL AMENDMENTS, AND PERMANENTLY SEED THE AREA IMMEDIATELY FOLLOWING SEEDBED PREPARATION.
3. LAY EROSION CONTROL BLANKETS ON THE SEEDED AREA SO THAT THEY ARE IN CONTINUOUS CONTACT WITH THE SOIL WITH EACH UP-SLOPE OR UP-STREAM BLANKET OVERLAPPING THE DOWN-SLOPE OR DOWN-STREAM BLANKET BY AT LEAST EIGHT INCHES, OR FOLLOW MANUFACTURER'S RECOMMENDATIONS.
4. TUCK THE UPPERMOST EDGE OF THE UPPER BLANKETS INTO A CHECK SLOT (SLIT TRENCH), BACKFILL WITH SOIL AND TAMP DOWN. IN CERTAIN APPLICATIONS, THE MANUFACTURER MAY REQUIRE ADDITION CHECK SLOTS AT SPECIFIC LOCATIONS DOWN SLOPE FROM THE UPPERMOST EDGE OF THE UPPER BLANKETS.
5. ANCHOR THE BLANKETS IN PLACE BY DRIVING STAPLES, PINS, OR STAKES THROUGH THE BLANKET AND INTO THE UNDERLYING SOIL. FOLLOW AN ANCHORING PATTERN APPROPRIATE FOR THE SITE CONDITIONS AND AS RECOMMENDED BY THE MANUFACTURER.

MAINTENANCE

- INSPECT WITHIN 24 HOURS OF EACH RAIN EVENT AND AT LEAST ONCE EVERY SEVEN CALENDAR DAYS.
- CHECK FOR EROSION OR DISPLACEMENT OF THE BLANKET.
- IF ANY AREA SHOWS EROSION, PULL BACK THAT PORTION OF THE BLANKET COVERING THE ERODED AREA, ADD SOIL AND TAMP, RESEED THE AREA, REPLACE AND STAPLE THE BLANKET.

NOTES

CHANNEL LININGS UTILIZE STAPLE PATTERN "C" WITH ADDITIONAL STAPLES ON SIDE SLOPES AT PROJECTED WATER LINE.

STAPLE PATTERNS APPLY TO ALL NORTH AMERICAN GREEN EROSION CONTROL BLANKETS. STAPLE PATTERNS MAY VARY DEPENDING UPON SOIL TYPE AND AVERAGE RAINFALL.

AT SLOPE LENGTHS GREATER THAN 300 FEET OR WHERE DRAINAGE OVER LARGE AREAS IS DIRECTED ONTO THE BLANKETS, STAPLE PATTERN "C" SHOULD BE UTILIZED.

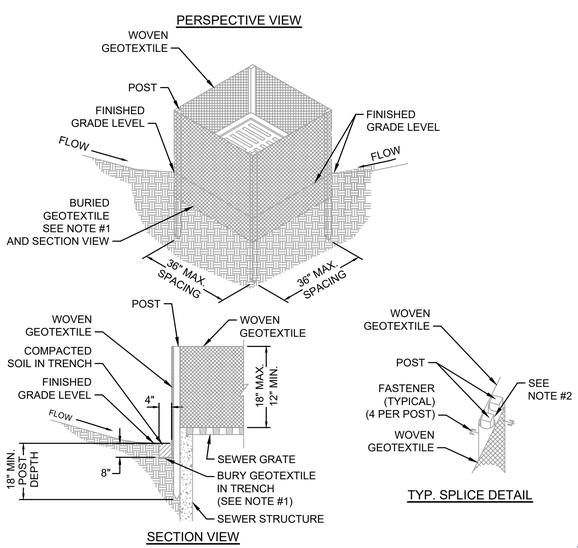

NOTES:

1. GEOTEXTILE FABRIC LAID ON DOWN-SLOPE SIDE AND BOTTOM OF TRENCH ALONG FULL PERIMETER OF SEWER STRUCTURE. DURING EXCAVATION, MINIMIZE DISTURBING THE GROUND AROUND TRENCH AS MUCH AS IS FEASIBLE AND SMOOTH SURFACE FOLLOWING EXCAVATION TO AVOID CONCENTRATING FLOWS.
2. IF SPLICING IS NECESSARY, FENCE SECTIONS SHALL BE CLOSE ENOUGH TOGETHER TO CREATE A SEAMLESS JOINT AND PREVENT SILT-LADEN WATER FROM ESCAPING THROUGH THE FENCE AT THE OVERLAP. JOINING SECTIONS SHALL NOT BE PLACED IN LOW SPOTS OR IN SUMP LOCATIONS.
3. PREFABRICATED UNITS MAY BE USED WITH PRIOR APPROVAL FROM PROJECT ENGINEER.

4 YARD INLET PROTECTION DETAIL

SCALE: 1"=5'-0"

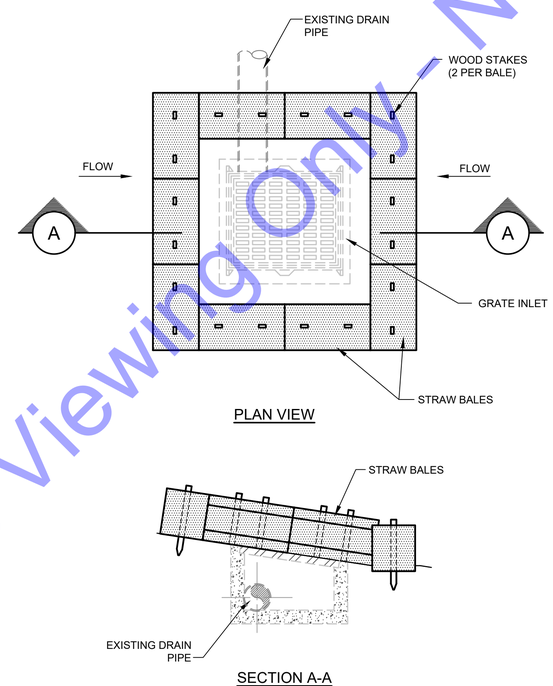

5 STORM INLET IN TURFED AREAS PROTECTION DETAILS

SCALE: 1"=5'-0"

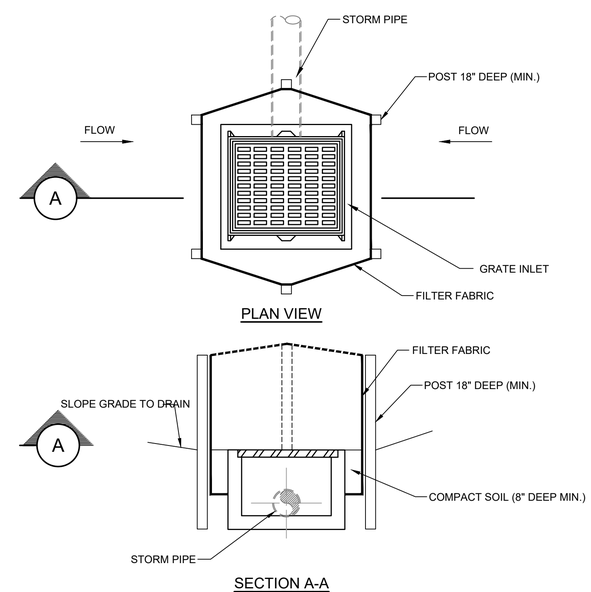

6 STORM INLET WITH SILT FENCE EROSION DETAIL

SCALE: 1"=5'-0"

For Public Viewing Only - Not For Downloading

COMMONWEALTH ENGINEERS, INC.
A wealth of resources to master a common goal.
https://commonwealthengineers.com/
OFFICE LOCATIONS IN:
INDIANAPOLIS, IN. (2)
EVANSVILLE, IN.
FORT WAYNE, IN.
CROWN POINT, IN.
BOWLING GREEN, KY.
SOUTH BEND, IN.

JEFF T. LASHLEE REGISTERED No. 12200746 STATE OF INDIANA PROFESSIONAL ENGINEER

Signature 5/01/25 Date

TOWN OF OSGOOD
RIPLEY COUNTY, INDIANA

2025 COMMUNITY CROSSINGS MATCHING GRANT (CCMG) ROUND 1 STREET IMPROVEMENTS

© 2025 BY COMMONWEALTH ENGINEERS, INC.-ALL RIGHTS RESERVED. REPRODUCTION BY ANY METHOD IN WHOLE OR IN PART WITHOUT PERMISSION IS PROHIBITED

Indiana811 Know what's below. Call before you dig. 1-800-382-5544 (ITS THE LAW)

No.	Submittal Revision	By	Date

Designed By: ITV	Drawn By: JTL	Checked By: RLM
Issue Date: 5/01/2025	Project No: H25019	Scale: AS SHOWN

EROSION CONTROL DETAILS

Drawing No: MD6

Sheet: 33 OF 33

File: Z:\SHAREDIN CLIENTS M:\OSGOOD\D H25019 2025-R1 CCMG\06 CAD\A CURRENT FILES\01 DRAWINGS\B SHEET FILES\PLAN SHEETS.DWG
Saved: 5/1/2025 11:32:48 AM Plotted: 5/1/2025 11:45:44 AM Current User: Ignacio Veloz, E Last Saved By: ivelcz