SET NO.

CITY OF GARRETT

DEKALB COUNTY, INDIANA

SR 8-CR 15
SANITARY SEWER AND WATER MAIN EXTENSION
JULY 2025

BOARD OF PUBLIC WORKS

TODD FIANDT	**MAYOR**
TOM KLEEMAN	**MEMBER**
DAVE DEMSKE	**MEMBER**
MARCIE CONKLE	**CLERK-TREASURER**
CHAD RAYLE	**CITY ATTORNEY**
PAT KLEEMAN	**WATER-SEWER DEPARTMENT**

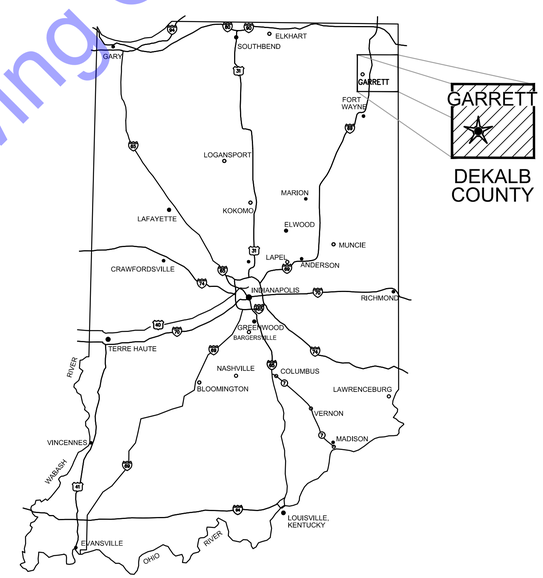

GENERAL LOCATION MAP

COMMONWEALTH™ ENGINEERS, INC.
A wealth of resources to master a common goal.

QA/QC BY : NATALIE M. SCHELLING, P.E. 6/6/25
DATE :

CERTIFIED BY : 6/6/25
BENJAMIN H. ADAMS
INDIANA PE No. 19700508
DATE :

BENJAMIN H. ADAMS REGISTERED No. 19700508 STATE OF INDIANA PROFESSIONAL ENGINEER

CONTRACT NO. : J24214

File: Z:\SHARED\IN CLIENTS A-L\GARRETT\J24214 - SR 8 -CR 15 HOLLMAN PROJECT\06 CAD\A CURRENT FILES\1 DRAWINGS\01 - J24214 - TITLE.DWG
Saved: 6/19/2025 10:35:13 AM Plotted: 6/30/2025 8:59:47 AM Current User: Craig Higbie LastSavedBy: chigbie

VICINITY MAP
SCALE: 1"=500'-0"

SCALE: 1"=500'
500' 0 500'

INDEX TO SHEETS		
SHEET #	DWG. #	DESCRIPTION
1	G1	TITLE SHEET
2	G2	VICINITY MAP & INDEX TO SHEETS
3	G3	LEGENDS
4	G4	GENERAL LOCATION AND CONTROL PLAN
5	PP1	PLAN & PROFILES - LINE 'A' - STATION 0+00-6+00; LINE 'A-1' - STATION 0+00-0+50
6	PP2	PLAN & PROFILES - LINE 'A' - STATION 6+00-10+00
7	PP3	PLAN & PROFILES - LINE 'A' - STATION 10+00-15+53
8	PP4	PLAN & PROFILES - LINE 'W' - STATION 0+00-7+00
9	PP5	PLAN & PROFILES - LINE 'W' - STATION 7+00-12+78
10	LS1	LIFT STATION - SITE PLAN
11	LS2	LIFT STATION - GRADING PLAN
12	LS3	CR15 LIFT STATION - PLAN & SECTION
13	LS4	HATCH ACCESS DETAILS
14	MD1	MISCELLANIOUS DETAILS
15	MD2	MISCELLANIOUS DETAILS
16	MD3	MISCELLANEOUS DETAILS
17	EC1	EROSION CONTROL PLAN
18	EC2	EROSION CONTROL PLAN
19	EC3	EROSION CONTROL PLAN
20	EC4	EROSION CONTROL PLAN
21	EC5	EROSION CONTROL PLAN
22	EC6	EROSION CONTROL DETAILS
23	E0-0	ELECTRICAL LEGENDS AND SCHEDULES
24	E1-0	ONE LINE DIAGRAM AND CONTROL PANEL DETAILS
25	E2-0	ELECTRICAL SITE PLAN
26	E3-0	ELECTRICAL DETAILS

COMMONWEALTH ENGINEERS, INC.
A wealth of resources to make a difference.
https://commonwealthengineers.com/

BENJAMIN H. ADAMS
REGISTERED No. 19700508 STATE OF INDIANA
PROFESSIONAL ENGINEER

Signature 6/6/2025 Date

CITY OF GARRETT, IN
DEKALB COUNTY

SR 8-CR 15
SANITARY SEWER AND WATER MAIN EXTENSION

Indiana811 Know what's below. Call before you dig.
Know what's below. 811 before you dig.
1-800-382-5544 (ITS THE LAW)

No.	Submittal Revision	By	Date

Designed By:	Drawn By:	Checked By:
BA/BW	CH	NS
Issue Date: 6/2025	Project No: S24214	Scale: AS SHOWN

VICINITY MAP AND INDEX TO SHEETS

Drawing No:
G2

Sheet: 2 OF 26

File: Z:\SHARED\IN CLIENTS A-L\GARRETT\24214 - SR 8 -CR 15 HOLLMAN PROJECT\06 CAD\A CURRENT FILES\1 DRAWINGS\02 - 24214 - VICINITY MAP AND INDEX.DWG
Saved: 6/25/2025 1:25:56 PM Plotted: 6/30/2025 9:01:08 AM Current User: Craig Higbie LastSavedBy: chigbie

GENERAL ABBREVIATIONS

A	AIR
AB	ANCHOR BOLT
AFF	ABOVE FINISH FLOOR
ALT	ALTERNATE
ALUM	ALUMINUM
@	AT
APP.	APPARENT
ATT	AERATION TANK TRANSFER
AUTO	AUTOMATIC
AVG	AVERAGE
B	BAFFLE
BLDG	BUILDING
BM	BENCH MARK
BOT	BOTTOM
BRG	BEARING
CFM	CUBIC FEET PER MINUTE
CL	CENTERLINE
CO	CLEAN OUT
COL/C	COLUMN
CONC	CONCRETE
COP	COPPER
CJ	CONSTRUCTION JOINT
CW	COLD WATER
CY	CUBIC YARD
D	DRAIN
DEC	DECANT
DIA	DIAMETER
DIM	DIMENSION
DI	DUCTILE IRON PIPE
DL	DEAD LOAD
DSPT	DOWN SPOUT
DWG	DRAWING
E	ELECTRICAL CONDUIT
EA	EACH
EF	EACH FACE
EFFL	EFFLUENT
EL	ELEVATION
EW	EACH WAY
EX	EXISTING
EXF	EXHAUST FAN
EXP JP	EXPANSION JOINT
F	FILTER
FCAR	FLANGED COUPLING ADAPTER, RESTRAINED
FD	FLOOR DRAIN
FDN	FOUNDATION
FH	FIRE HYDRANT
FLD	FILTRATE DRAIN
FLG	FLANGE
FL	FLUSHING LINE
FLR	FLOOR
FM	FORCE MAIN
FRP	FIBER REINFORCED PLASTIC
FT	FEET OR FOOT
FTG	FOOTING
FW	FINISHED WATER
G	GAS
GALV	GALVANIZED
GEN	GENERAL
GRD	GROUND OR GRADE
HB	HOSE BIBB
HORIZ	HORIZONTAL
HP	HORSEPOWER
HW	HOT WATER
ID	INSIDE DIAMETER
IJ	ISOLATION JOINT
INV	INVERT
IP	IRON PIN
LAV	LAVATORY
LB	POUND
LL	LIVE LOAD
LLV	LONG LEG VERTICAL
LTG	LIGHTING
MAX	MAXIMUM
MCC	MOTOR CONTROL CENTER
MGD	MILLIONS GALLONS PER DAY
MH	MANHOLE
MIN	MINIMUM, MINUTE
MJ	MECHANICAL JOINT
NC	NORMALLY CLOSED
NG	NATURAL GAS
NIC	NOT IN CONTACT
NO	NORMALLY OPEN
NO.	NUMBER
NPW	NON-POTABLE WATER
OC	ON CENTER
OD	OUTSIDE DIAMETER
OPG	OPENING
OPP	OPPOSITE
PB	PULL BOX
PE	POLYETHYLENE EXP. JT. MATERIAL
P/L	PROPERTY LINE
POJ	PUSH ON JOINT
PSF	POUNDS PER SQUARE FOOT
PSI	POUNDS PER SQUARE INCH
PVC	POLYVINYL CHLORIDE
PW	POTABLE WATER
R	RECIRULCATION
RAD	RADIUS
RAS	RETURN ACTIVATED SLUDGE
RCP	REINFORCED CONCRETE PIPE
RD	ROOF DRAIN
REINF	REINFORCING
REQ'D	REQUIRED
R/W (ROW)	RIGHT-OF-WAY
SAN	SANITARY
SAS	SANITARY SEWER
SCH	SCHEDULE
SECT	SECTION
SF	SQUARE FEET
SHT	SHEET
SL	SAMPLE LINE
SOS	STORM SEWER
SP	STOP PLATE
SQ	SQUARE
STD	STANDARD
S STL, SS	STAINLESS STEEL
STL	STEEL
SUP	SUPERNATANT
SY	SQUARE YARD
TOS	TOP OF SLAB
TOW	TOP OF WALL
TW	TERTIARY WATER
TYP	TYPICAL
V	VACUUM OR VALVE
VAR	VARIES
VERT	VERTICAL
W	WEIR
W/	WITH
W/O	WITHOUT
WAS	WASTE ACTIVATED SLUDGE
WC	WATER CLOSET
WH	WATER HEATER
WL	WATER LINE
WWF	WELDED WIRE FABRIC
YH	YARD HYDRANT

UTILITY CONTACT INFORMATION

UTILITY PROVIDER	CONTACT	PHONE	ADDRESS
AMERICAN ELECTRIC POWER TELECOM	DAVID LAWRENCE	(614) 883-7836	850 TECH CENTER DR. GAHANNA, OH 43215 dalawrence@aep.com
AT&T - DISTRIBUTION	ATT INDIANA UTILITY COORDINATION		g09871@att.com
AUBURN ELECTRIC, CITY OF	BARBARA CASTATOR	(260) 925-8232 x1326	5066 CO RT 29 AUBURN, IN 46706 bmcastator@ci.auburn.in.us
AUBURN WATER, SEWER & ELECTRIC, CITY OF	STEVE BLAUGH	(260) 925-5711 x2201	800 W NORTH ST AUBURN, IN 46706
GARRETT ELECTRIC	DAVE VANDERBOSCH	(260) 357-4593	130 S. RANDOLPH ST GARRETT, IN 46738 electric@garrettindiana.us
FRONTIER		(260) 459-7759	4027 BECKWITH DR FORT WAYNE, IN 46808
GARRETT WATER AND SEWER DEPARTMENT	PAT KLEEMAN	(260) 357-3811	130 S. RANDOLPH ST GARRETT, IN 46738 water-sewer@garrettindiana.us
IN FIBER NETWORK DBA INTELLIGENT FIBER NETWORK	GEORGE HUSS	(443) 403-2023	1401 WYNKOOP ST., FLOOR 4, RM-DATA DENVER, CO 80202 george.huss@zayo.com
INDEPENDENTS FIBER NETWORK	SARAH EMANS	(419) 739-3124	1720 WILLIPIE STREET WAPAKONETA, OH 45895 semans@cniteam.com
MEDIACOM, LLC (AUBURN)	MARK ZACHARKO	(270) 527-9939 x3285	90 MAIN ST BENTON, KY 42025 mzacharko@mediacomcc.com
NIPSCO GAS (ANGOLA)	UTILITY COORDINATION		700 W BROAD ST ANGOLA, IN 46703 utilitycoordination@nisource.com
ZAYO BANDWIDTH	WAYLON HIGGINS	(765) 341-1199	722 N HIGH SCHOOL RD INDIANAPOLIS, IN 46214 waylon.higgins@zayo.com

GENERAL NOTES

1. IF ANY ERRORS OR DISCREPANCIES BECOME APPARENT, THEY SHALL BE BROUGHT TO THE ATTENTION OF THE ENGINEER PRIOR TO CONSTRUCTION SO THAT CLARIFICATION OR REDESIGN MAY OCCUR.
2. LIMITS OF CONSTRUCTION SHALL BE WITHIN EXISTING RIGHT-OF-WAYS UNLESS OTHERWISE NOTED.
3. FOR AREAS OUTSIDE OF EXISTING RIGHT-OF-WAYS, THE CONTRACTOR SHALL CONFINE ALL WORK TO THE LIMITS OF PERMANENT AND TEMPORARY EASEMENTS OR CONSTRUCTION LIMIT BOUNDARIES AS SHOWN ON THE DRAWINGS.
4. THE CONTRACTOR SHALL BE RESPONSIBLE FOR SECURING, AT NO ADDITIONAL COST TO THE CITY, TEMPORARY EASEMENTS NEEDED FOR STORAGE, STOCKPILING, ACCESS, OR ANY OTHER REASON, OUTSIDE OF ANY EASEMENTS OR RIGHT-OF-WAY PROVIDED.
5. THE CONTRACTOR SHALL COORDINATE THE ACTIVITIES OF THEIR PERSONNEL, SUBCONTRACTORS, AND UTILITIES PERFORMING WORK ON THIS PROJECT. THE CONTRACTOR SHALL ALSO COORDINATE WITH THE OWNER'S OPERATIONS AND MAINTENANCE PERSONNEL WHO MAY BE WORKING IN OR NEAR THE PROJECT AREA.
6. THE CONTRACTOR IS SOLELY AND COMPLETELY RESPONSIBLE FOR JOB SITE CONDITIONS DURING THE COURSE OF CONSTRUCTION OF THIS PROJECT, INCLUDING EROSION CONTROL AND THE SAFETY OF ALL PERSONS AND PROPERTY. THIS REQUIREMENT SHALL APPLY CONTINUOUSLY AND NOT BE LIMITED TO NORMAL WORKING HOURS, AND THE CONTRACTOR SHALL DEFEND, INDEMNIFY AND HOLD THE OWNER AND THE ENGINEER HARMLESS FROM ALL LIABILITY, REAL OR ALLEGED, IN CONNECTION WITH THE PERFORMANCE OR WORK ON THE PROJECT.
7. THE CONTRACTOR SHALL BE RESPONSIBLE FOR ALL LINES, GRADES AND ELEVATIONS. ALL PIPES SHALL SLOPE UNIFORMLY BETWEEN INVERT ELEVATIONS SHOWN.
8. IT IS THE RESPONSIBILITY OF THE CONTRACTOR TO REMOVE ALL MUD, DIRT, GRAVEL, AND ANY OTHER MATERIALS TRACKED ONTO ANY PUBLIC OR PRIVATE STREETS, PARKING LOTS, OR WALKS. THIS MATERIAL REMOVAL OR SWEEPING OF THE STREETS SHALL BE DONE AS FREQUENTLY AS NECESSARY TO MAINTAIN REASONABLY CLEAN AREAS. THE CONTRACTOR SHALL ALSO CONTROL DUST THROUGH THE USE OF WATERING, APPLICATION OF DUST PALLIATIVE, OR OTHER APPROVED METHODS. NO DIRECT PAYMENT WILL BE MADE FOR ANY SUCH CLEANING WORK OR DUST CONTROL.
9. EXISTING SIGNS TO BE REMOVED AND RESET AFTER CONSTRUCTION SHALL BE COORDINATED WITH THE CITY OF GARRETT AND THE DEKALB COUNTY HIGHWAY DEPARTMENT.
10. THE CONTRACTOR SHALL COMPLY WITH THE REQUIREMENTS OF ALL PERMITS OBTAINED FOR THE PROJECT.
11. THE COST OF ABIDING BY THE PROVISIONS OR PERMITS ISSUED BY VARIOUS AGENCIES SHALL BE CONSIDERED INCIDENTAL TO THE CONTRACT. ALL ASSOCIATED BONDING REQUIREMENTS AND COSTS SHALL ALSO BE CONSIDERED INCIDENTAL TO THE CONTRACT.
12. THE CONTRACTOR SHALL PRESERVE AND PROTECT PROPERTY MARKERS, SECTION CORNERS, SURVEY MARKS AND BENCHMARKS, SUCH AS STONES, PIPES, OR OTHER MONUMENTS ENCOUNTERED. IF THE CONTRACTOR MUST DISTURB THE PROPERTY MARKERS OR MONUMENTS, THEIR HORIZONTAL AND VERTICAL LOCATION SHALL BE DETERMINED AND RECORDED BY A REGISTERED LAND SURVEYOR AND THE OWNER NOTIFIED BEFORE DISTURBING. ALL PROPERTY MARKERS AND MONUMENTS DISTURBED DURING CONSTRUCTION SHALL BE RE-ESTABLISHED BY A REGISTERED LAND SURVEYOR TO FINAL COMPLETION.
13. ROADWAY SURFACING AND BASE MATERIALS OR OTHER PROPERTY REMOVED OR DAMAGED, SHALL BE REPLACED OR REPAIRED AS PROVIDED FOR IN THE CONTRACT DOCUMENTS.
14. REGRADE AREAS AS NECESSARY WITHIN THE CONSTRUCTION LIMITS TO ALLOW PROPER DRAINAGE TO EXISTING STORM SEWER STRUCTURES. ANY EXCESS SOIL AND SPOIL MATERIAL SHALL BE DISPOSED OF BY THE CONTRACTOR OFF-SITE.
15. WORK NOT SPECIFIED FOR PAYMENT AS OR PART OF A SPECIFIC PAY ITEM SHALL BE CONSIDERED INCIDENTAL TO THE CONTRACT BY THE CONTRACTOR.
16. COORDINATION AND PROPER FIT AND SURVEY OF ALL PROJECT ELEMENTS ARE THE RESPONSIBILITY OF THE CONTRACTOR. CONTRACTOR SHALL CONDUCT A PRE-CONSTRUCTION STAKEOUT OF THE PROJECT ELEMENTS TO VERIFY THE COORDINATES PROVIDED.
17. THE CONTRACTOR SHALL VERIFY ALL RIM ELEVATIONS OF PROPOSED STRUCTURES PRIOR TO ORDERING ANY MATERIALS.
18. ADDITIONAL ACCESS ROAD OUTSIDE OF WHAT IS SHOWN ON DRAWINGS, SHALL BE INCIDENTAL TO OTHER PAY ITEMS.
19. ALL NORTHINGS AND EASTINGS PROVIDED FOR NEW STRUCTURES ARE DESIGNATED TO THE CENTER OF THE STRUCTURE.
20. THE SITE IS ACTIVELY UNDER CONSTRUCTION OF THE SERVICE STEEL FRAMING FACILITY. THE CONTRACTOR SHALL COORDINATE WITH THE SERVICE STEEL FRAMING CONTRACTORS REGARDING SITE TRAFFIC, MATERIAL STORAGE, SCHEDULE OF WORK, AND ALL OTHER ASPECTS IN WHICH THE PROJECTS COULD IMPACT EACH OTHER.

EXISTING UTILITY NOTES

1. THE EXISTING UTILITY INFORMATION SHOWN ON THESE DRAWINGS CONCERNING TYPE AND LOCATION OF UNDERGROUND UTILITIES IS NOT GUARANTEED TO BE ACCURATE OR ALL-INCLUSIVE. LOCATION, SIZE AND MATERIAL SHOWN ON UTILITIES ARE FROM AVAILABLE RECORDS AND AVAILABLE FIELD MARKINGS, SUPPLIED BY THE RESPECTIVE UTILITY COMPANY. THE INDIANA UNDERGROUND PLANT PROTECTION SERVICE (IUPPS) MUST BE NOTIFIED 48 HOURS PRIOR TO ANY EXCAVATION FOR VERIFICATION OF LOCATION, SIZE AND MATERIAL FOR EXISTING UNDERGROUND UTILITIES (1-800-382-5544).
2. SIZE, MATERIAL, DEPTH AND LOCATION OF KNOWN EXISTING SEWER/WATER FACILITIES ARE FROM AVAILABLE HISTORIC INFORMATION AND ABOVE-GROUND INSPECTION AND MEASUREMENT. THE CONTRACTOR SHALL VERIFY ALL SEWER/WATER INFORMATION CONTAINED IN THE CONTRACT DOCUMENTS PRIOR TO ANY CONSTRUCTION WHICH WOULD BE IMPACTED BY FACILITIES NOT LOCATED AS SHOWN IN THE CONTRACT DOCUMENTS. THE COST TO CORRECT ANY FACILITIES INSTALLED PRIOR TO VERIFICATION OF EXISTING CONDITIONS BY THE CONTRACTOR SHALL BE AT NO COST TO THE OWNER OR ENGINEER. DIFFERING CONDITIONS DISCOVERED DURING VERIFICATION WILL BE HANDLED PER THE CONTRACT DOCUMENTS.
3. THE LOCATIONS OF UTILITIES AND STRUCTURES, BOTH SURFACE AND SUBSURFACE, ARE SHOWN ON THE PLANS FROM DATA AVAILABLE AT THE TIME OF SURVEY AND ARE NOT NECESSARILY COMPLETE OR CORRECT. DETERMINING THE EXACT LOCATION AND PROTECTING UTILITIES AND STRUCTURES ARE THE RESPONSIBILITY OF THE CONTRACTOR. DURING CONSTRUCTION, THE CONTRACTOR SHALL PROTECT ALL EXISTING UTILITIES AND STRUCTURES WHETHER SHOWN ON THE PLANS OR NOT. IF DAMAGE IS CAUSED, THE CONTRACTOR SHALL BE RESPONSIBLE FOR THE REPAIR AND RESTORATION OF SAME IN ACCORDANCE WITH THE REQUIREMENTS OF THE UTILITY OWNER AND FOR ANY RESULTING CONTINGENT DAMAGE AND COST.
4. IF UTILITY FACILITIES OTHER THAN THOSE SHOWN ARE LOCATED, OR IF UTILITIES ARE LOCATED WHICH ARE NOT IN ACCORDANCE WITH THE LOCATIONS SHOWN ON THE DRAWINGS, THE ENGINEER SHALL BE NOTIFIED TO DETERMINE IF PLAN REVISIONS ARE NEEDED.
5. ALL EXISTING UTILITIES SHOWN IN PROFILE ARE INDICATED AT THEIR ASSUMED ELEVATION. CONTRACTOR TO FIELD VERIFY PRIOR TO CONSTRUCTION.
6. IN GENERAL, UTILITY SERVICE LINES TO INDIVIDUAL CUSTOMERS ARE NOT SHOWN ON THE PLANS. CONTRACTOR SHALL ASSUME THAT UNDERGROUND SERVICE LINES EXIST TO EACH PROPERTY ALONG THE NEW SEWER ROUTE FOR WATER, SANITARY SEWER, GAS, ELECTRIC, TELEPHONE, AND FIBER OPTIC. THE CONTRACTOR SHALL LOCATE, PROTECT, AND IF DAMAGED BY CONTRACTOR, REPAIR ALL UTILITY SERVICE LINES ENCOUNTERED.
7. IT SHALL BE THE CONTRACTOR'S RESPONSIBILITY TO MAINTAIN IN SERVICE ALL EXISTING UTILITIES ENCOUNTERED DURING CONSTRUCTION UNLESS OTHERWISE INDICATED IN THE DRAWINGS. ANY UTILITY WHICH CAN BE REMOVED DURING CONSTRUCTION WITHOUT UNDUE INTERRUPTION OF SERVICE MAY BE REMOVED AND REPLACED BY THE CONTRACTOR WITH THE PERMISSION OF THE OWNER AND THE APPLICABLE UTILITY OWNER.
8. THE CONTRACTOR SHALL BE RESPONSIBLE FOR REPAIR/REPLACEMENT TO ALL DAMAGED WATER SERVICES. CONTRACTOR MUST NOTIFY WATER MAINTENANCE AND SERVICE DISPATCHER OF ANY DAMAGES TO THE WATER FACILITIES. DAMAGED WATER FACILITIES MUST BE REPAIRED BY THE CONTRACTOR WITHIN TWO (2) HOURS AT NO ADDITIONAL COST TO THE OWNER. IF WATER MAINTENANCE IS REQUIRED TO MAKE REPAIRS, THE CONTRACTOR WILL BE BILLED. WATER MAIN REPLACEMENT SHALL BE COORDINATED WITH GARRETT WATER DEPARTMENT AND SHALL BE COMPLETED IN CONFORMANCE TO THE CONTRACT DOCUMENTS.
9. THE CONTRACTOR SHALL PROTECT ALL POWER POLES FROM DAMAGE ASSOCIATED WITH CONSTRUCTION ACTIVITIES. WHERE REQUIRED, ALL UTILITY POLES ARE TO BE SUPPORTED IN A MANNER APPROVED BY THE APPROPRIATE UTILITY DURING INSTALLATION OF SEWER/WATER PIPE. ALL COSTS ASSOCIATED WITH THE PROTECTION AND/OR TEMPORARY SUPPORT OF UTILITY POLES SHALL BE THE RESPONSIBILITY OF THE CONTRACTOR.
10. THE CONTRACTOR SHALL MAKE PROVISIONS TO MAINTAIN FLOWS IN ALL SANITARY SEWERS, AND OVERFLOWS ARE PROHIBITED. BYPASS PUMPING OR ALTERNATE PROVISIONS MAY BE REQUIRED AND SHALL BE SUFFICIENT TO CONVEY FLOWS UNDER ALL CONDITIONS. ALL COSTS ASSOCIATED WITH MAINTAINING SAID FLOWS SHALL BE THE RESPONSIBILITY OF THE CONTRACTOR.

LEGEND

NEW TEMPORARY EASEMENT (PLAN ONLY)
NEW PERMANENT EASMENT (PLAN ONLY)
GRANULAR BACKFILL (PROFILES AND SECTIONS ONLY)
ASPHALT (PROFILES AND SECTIONS ONLY)
ABANDONED IN PLACE (PLAN ONLY)
STONE DRIVE (PLAN) GROUT (PROFILES AND SECTIONS)
CONCRETE
DROP SHAFT LOCATION (PLAN ONLY)

NEW SANITARY MANHOLE
NEW FORCE MAIN
NEW SANITARY SEWER
NEW WATER MAIN
NEW LIFT STATION
EXISTING SANITARY MANHOLE
EXISTING SANITARY SEWER
EXISTING SANITARY SEWER TO BE PLUGGED
EXISTING SANITARY/STORM SEWER TO BE ABANDONED/FILLED
EXISTING SANITARY/STORM SEWER TO BE REMOVED
EXISTING FORCE MAIN
EXISTING STORM STRUCTURE
EXISTING STORM SEWER
EXISTING WATERLINE
EXISTING FIRE HYDRANT
EXISTING WATER VALVE
EXISTING WATER SPIGOT

EXISTING GAS METER
EXISTING FIBER OPTICS
EXISTING FIBER OPTICS BOX
EXISTING ELECTRIC BOX
EXISTING MAILBOX
EXISTING SIGN
EXISTING POST
EXISTING FENCE
EXISTING GUARDRAIL
EXISTING DECIDUOUS TREE
EXISTING EVERGREEN TREE
EXISTING SHRUB/BUSH
EXISTING TREE LINE
EXISTING MAJOR CONTOUR LINE
EXISTING MINOR CONTOUR LINE
APPROX. RIGHT-OF-WAY
APPROX. PROPERTY LINE

EXISTING WATER METER
EXISTING GAS LINE
EXISTING GAS VALVE
EXISTING LIGHT POLE
EXISTING POWER POLEW/ GUY WIRE
EXISTING OVERHEAD ELECTRIC
EXISTING BURIED TELEPHONE
EXISTING TELEPHONE CONTROL BOX
EDGE OF DRIVE
EXISTING SPOT ELEVATION
CONTROL POINT
TEMPORARY BENCH MARK
WATER EDGE
EXISTING BIG ROCK
CONSTRUCTION LIMITS/TRENCH LIMITS

COMMONWEALTH ENGINEERS, INC.
A wealth of resources to make a difference.
https://commonwealthengineers.com/
BENJAMIN H. ADAMS REGISTERED No. 19700508 STATE OF INDIANA PROFESSIONAL ENGINEER
Signature 6/6/2025 Date

CITY OF GARRETT, IN
DEKALB COUNTY

SR 8-CR 15
SANITARY SEWER AND WATER MAIN EXTENSION

Indiana811 Know what's below. Call before you dig.
Know what's below. 811 before you dig.
1-800-382-5544 (ITS THE LAW)

No.	Submittal / Revision	By	Date

Designed By:	Drawn By:	Checked By:
BA/BW	CH	NS
Issue Date: 6/2025	Project No: S24214	Scale: AS SHOWN

LEGEND, GENERAL NOTES, EXISTING UTILITY NOTES AND CONTACTS

Drawing No: G3

Sheet: 3 OF 26

File: Z:\SHARED\IN CLIENTS A-L\GARRETT\J24214 - SR 8 -CR 15 HOLLMAN PROJECT\06 CAD\A CURRENT FILES\1 DRAWINGS\02 - J24214 - VICINITY MAP AND INDEX.DWG
Saved: 6/25/2025 1:25:56 PM Plotted: 6/30/2025 9:01:11 AM Current User: Craig Higbie LastSavedBy: chigbie

GENERAL LOCATION PLAN

SCALE: 1"=100'-0"

SCALE: 1"=100'

100' 0 100'

CONTROL SCHEDULE

POINT #	NORTHING	EASTING	ELEVATION	DESCRIPTION
701	2229039.60	478944.76		CP / OTM CAP
702	2229341.96	478952.60		CP / OTM CAP
703	2229927.19	478982.62		CP / OTM CAP
704	2230522.95	478962.80		CP / OTM CAP
707	2228606.11	479027.79		CP / OTM CAP

COMMONWEALTH ENGINEERS, INC.
A wealth of resources to make a difference.
https://commonwealthengineers.com/

BENJAMIN H. ADAMS
REGISTERED No. 19700508 STATE OF INDIANA
PROFESSIONAL ENGINEER

Signature Date 6/6/2025

CITY OF GARRETT, IN
DEKALB COUNTY

SR 8-CR 15
SANITARY SEWER AND WATER MAIN
EXTENSION

Indiana 811
Know what's below. Call before you dig.
Know what's below. 811 before you dig.
1-800-382-5544
(ITS THE LAW)

No.	Submittal / Revision	By	Date

Designed By:	Drawn By:	Checked By:
BA/BW	CH	NS
Issue Date: 6/2025	Project No: S24214	Scale: AS SHOWN

GENERAL LOCATION AND CONTROL PLAN

Drawing No: G4

Sheet: 4 OF 26

File: Z:\SHARED\IN CLIENTS A-L\GARRETT\J24214 - SR 8 - CR 15 HOLLMAN PROJECT\06 CAD\A CURRENT FILES\1 DRAWINGS\03 - J24214 - GENERAL LOCATION PLAN.DWG
Saved: 6/25/2025 2:04:07 PM Plotted: 6/30/2025 9:01:57 AM Current User: Craig Higbie LastSavedBy: chigbie

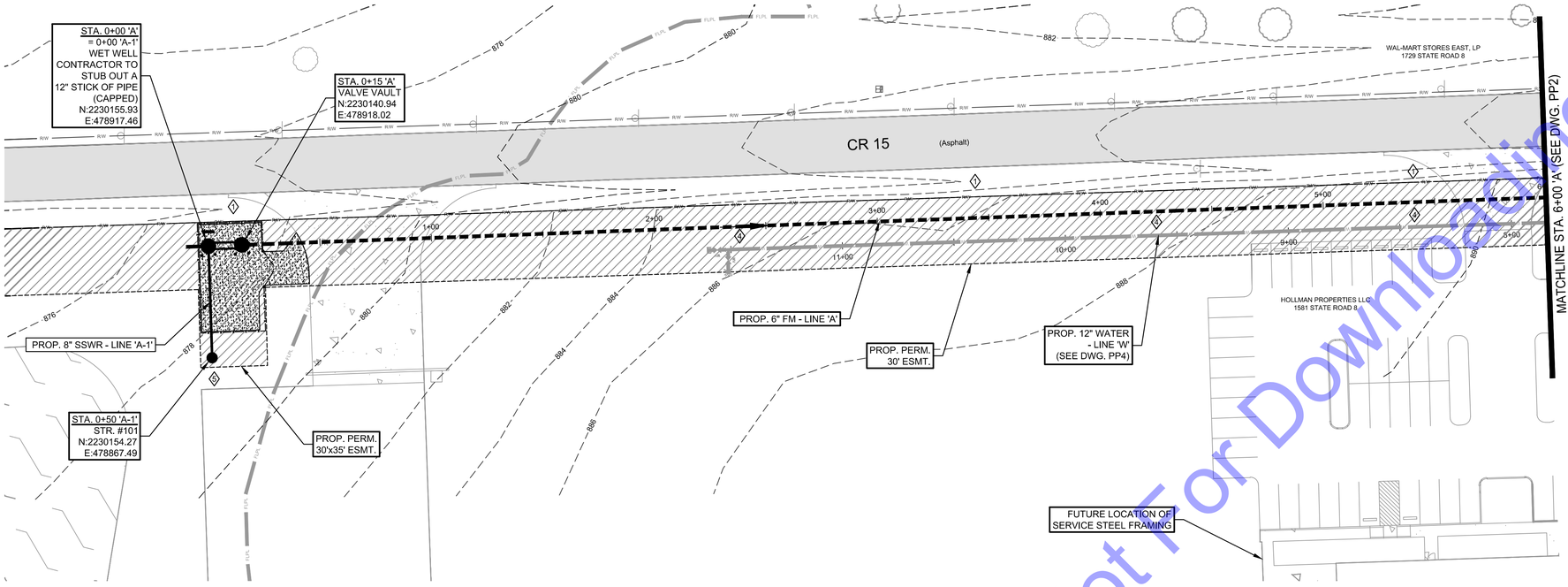

PLAN VIEW

SCALE: 1"=30'-0"

SCALE: 1"=30'

30' 0 30'

NOTE:
THE EXISTING AND PROPOSED PROFILE GRADES ARE BASED ON THE ELEVATIONS AT THE CENTERLINE OF THE PROPOSED SANITARY SEWER.

CODED NOTES

1. SEE EC DRAWINGS FOR EROSION CONTROL MEASURES.
2. CONTRACTOR TO VERIFY EX. UTILITY LOCATIONS PRIOR TO ANY CONSTRUCTION. IN THE EVENT OF UTILITY CONFLICTS, CONTRACTOR SHALL NOTIFY UTILITY TO RELOCATE TO AVOID CONFLICTS.
3. CONTRACTOR TO PROTECT ANY EXISTING STORM SEWER AND STRUCTURES AND/OR FIELD TILE ENCOUNTERED DURING CONSTRUCTION. IF ENCOUNTERED AND DISTURBED, CONTRACTOR TO REPLACE TO A CONDITION EQUAL TO OR BETTER.
4. CONTRACTOR TO MAINTAIN 10' MINIMUM HORIZONTAL SEPARATION BETWEEN WATER AND SANITARY LINES.
5. CONTRACTOR TO COORDINATE WITH SERVICE STEEL FRAMING CONTRACTOR REGARDING THEIR CONNECTION TO THE SANITARY SEWER.

BASE FLOOD ELEVATION
877.80

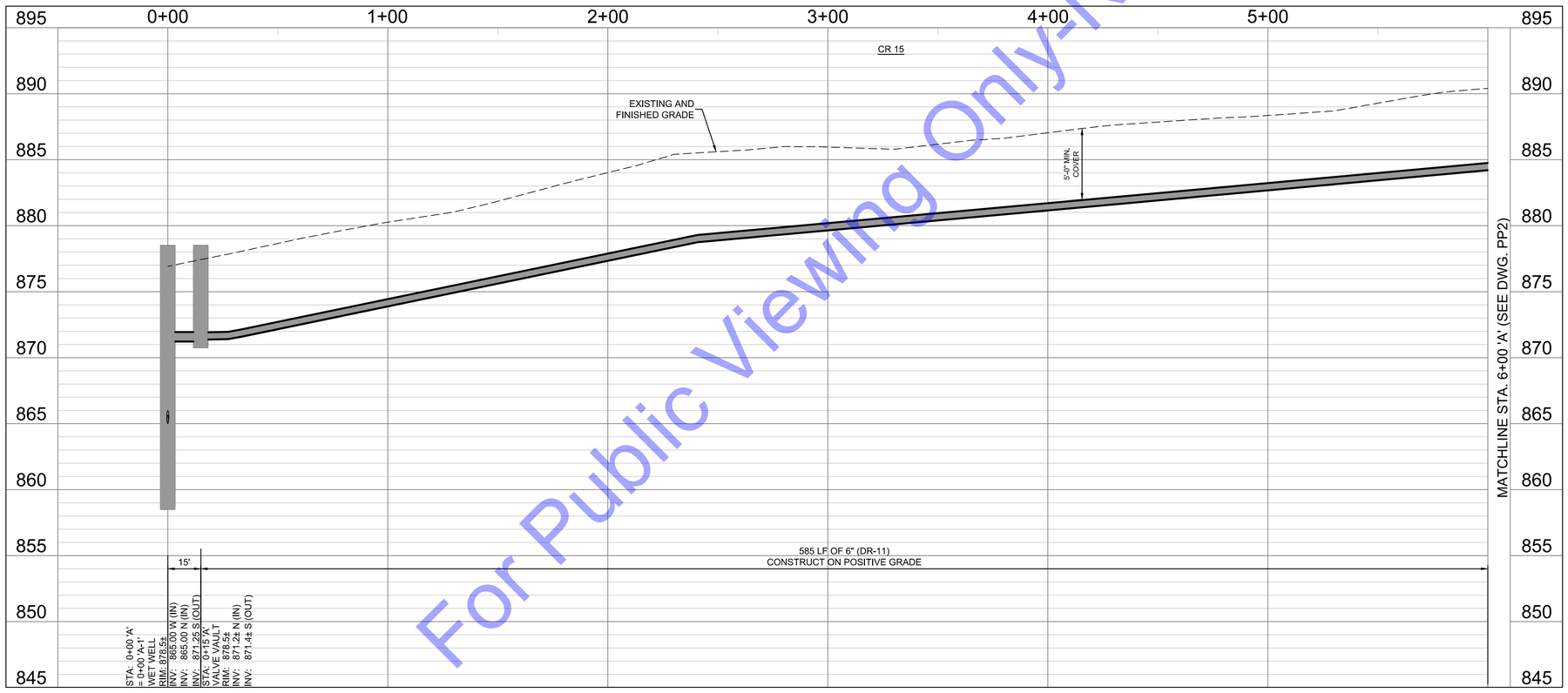

PROFILE - LINE 'A'

HORIZONTAL SCALE: 1"=30'-0"
VERTICAL SCALE: 1"=5'-0"

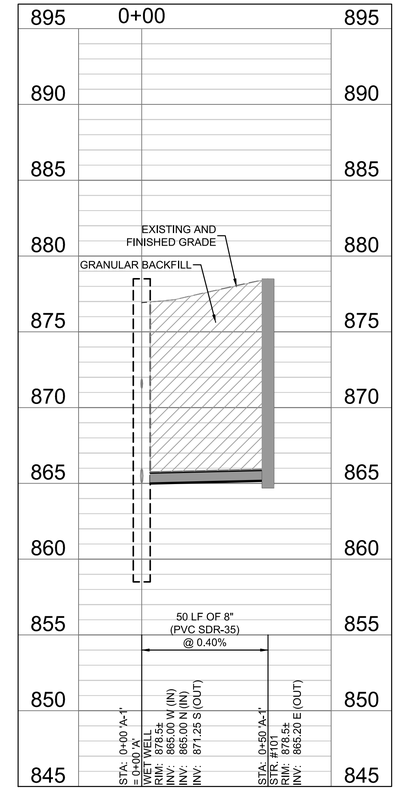

PROFILE - LINE 'A-1'

HORIZONTAL SCALE: 1"=30'-0"
VERTICAL SCALE: 1"=5'-0"

COMMONWEALTH ENGINEERS, INC.
A wealth of resources to make a difference.
https://commonwealthengineers.com/

BENJAMIN H. ADAMS
REGISTERED
No. 19700508
STATE OF INDIANA
PROFESSIONAL ENGINEER

Signature 6/6/2025 Date

CITY OF GARRETT, IN
DEKALB COUNTY

SR 8-CR 15
SANITARY SEWER AND WATER MAIN
EXTENSION

Indiana811 Know what's below. Call before you dig.
Know what's below. 811 before you dig.
1-800-382-5544
(ITS THE LAW)

No.	Submittal / Revision	By	Date

Designed By:	Drawn By:	Checked By:
BA/BW	CH	NS
Issue Date: 6/2025	Project No: S24214	Scale: AS SHOWN

PLAN & PROFILES - LINE 'A' - STATION 0+00-6+00; LINE 'A-1' - STATION 0+00-0+50

Drawing No:
PP1

Sheet: 5 OF 26

File: Z:\SHARED\IN CLIENTS A-L\GARRETT\J24214 - SR 8 -CR 15 HOLLMAN PROJECT\06 CAD\A CURRENT FILES\ DRAWINGS\04 - J24214 - PLAN & PROFILE.DWG
Saved: 6/25/2025 1:59:40 PM Plotted: 6/30/2025 9:02:50 AM Current User: Craig Higbie LastSavedBy: chigbie

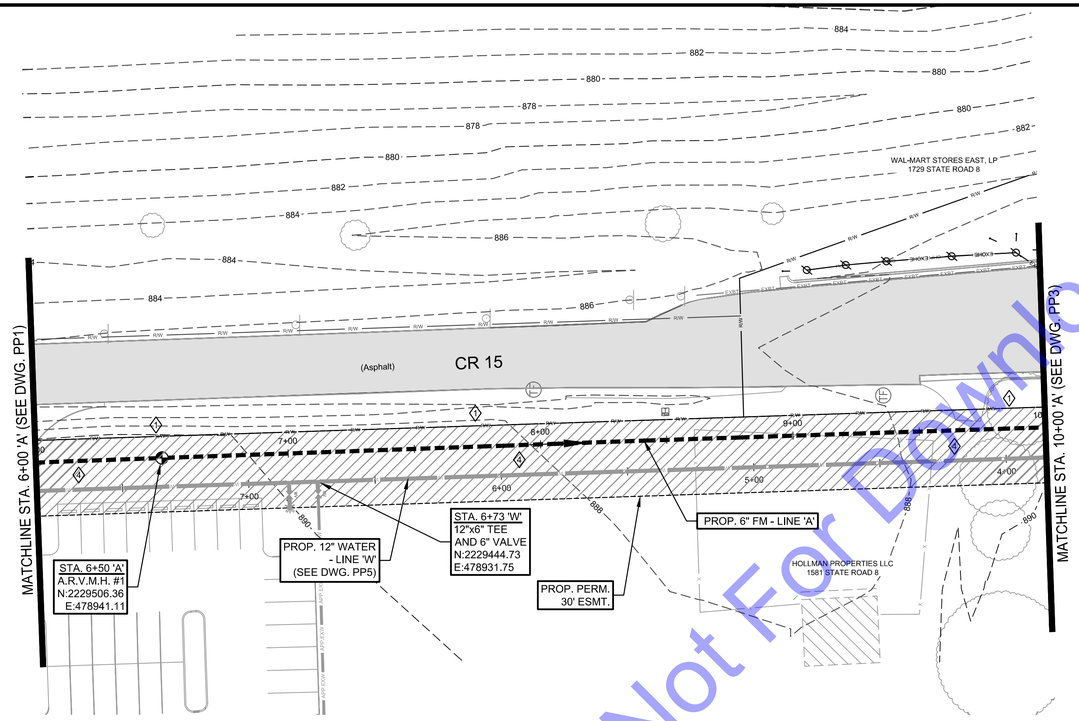

PLAN VIEW

SCALE: 1"=30'-0"

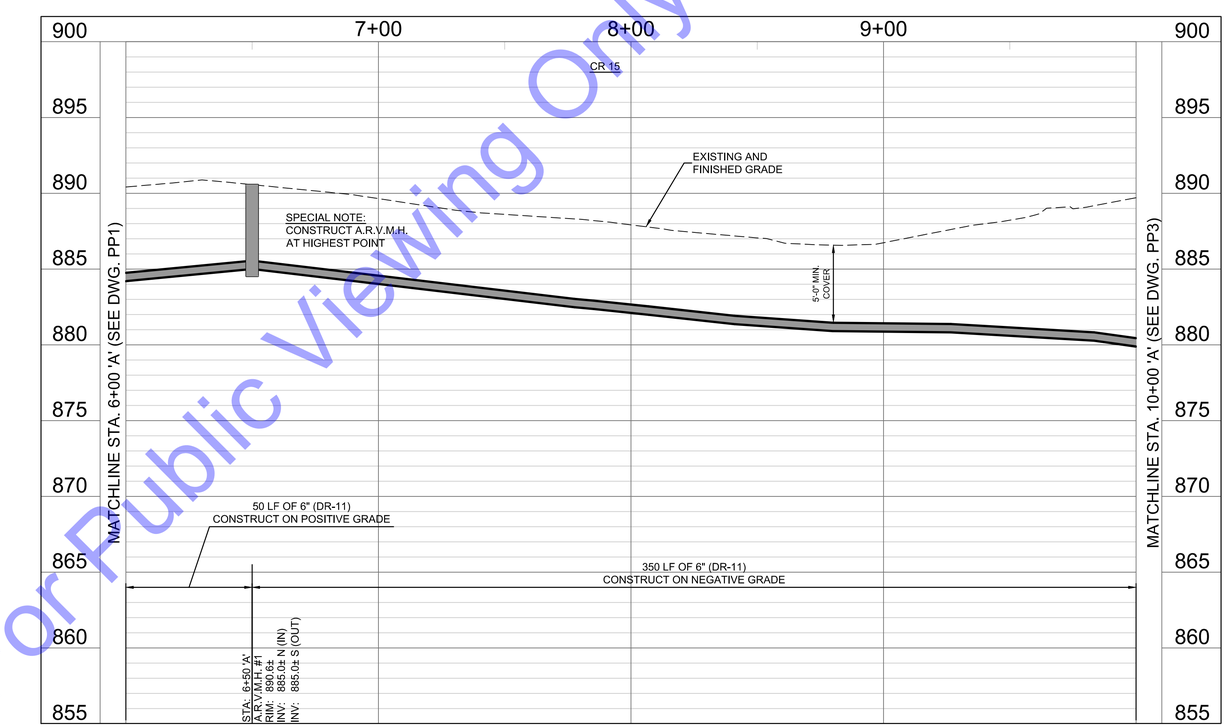

PROFILE - LINE 'A'

HORIZONTAL SCALE: 1"=30'-0"
VERTICAL SCALE: 1"=5'-0"

SCALE: 1"=30'

30' 0 30'

NOTE:
THE EXISTING AND PROPOSED PROFILE GRADES ARE BASED ON THE ELEVATIONS AT THE CENTERLINE OF THE PROPOSED SANITARY SEWER.

CODED NOTES

1. SEE EC DRAWINGS FOR EROSION CONTROL MEASURES.
2. CONTRACTOR TO VERIFY EX. UTILITY LOCATIONS PRIOR TO ANY CONSTRUCTION. IN THE EVENT OF UTILITY CONFLICTS, CONTRACTOR SHALL NOTIFY UTILITY TO RELOCATE TO AVOID CONFLICTS.
3. CONTRACTOR TO PROTECT ANY EXISTING STORM SEWER AND STRUCTURES AND/OR FIELD TILE ENCOUNTERED DURING CONSTRUCTION. IF ENCOUNTERED AND DISTURBED, CONTRACTOR TO REPLACE TO A CONDITION EQUAL TO OR BETTER.
4. CONTRACTOR TO MAINTAIN 10' MINIMUM HORIZONTAL SEPARATION BETWEEN WATER AND SANITARY LINES.

COMMONWEALTH ENGINEERS, INC.
A wealth of resources to make a difference.
https://commonwealthengineers.com/

BENJAMIN H. ADAMS
REGISTERED No. 19700508 STATE OF INDIANA
PROFESSIONAL ENGINEER
Signature 6/6/2025 Date

CITY OF GARRETT, IN
DEKALB COUNTY

SR 8-CR 15
SANITARY SEWER AND WATER MAIN EXTENSION

Indiana 811
Know what's below. Call before you dig.
Know what's below. 811 before you dig.
1-800-382-5544
(ITS THE LAW)

No.	Submittal / Revision	By	Date

Designed By:	Drawn By:	Checked By:
BA/BW	CH	NS
Issue Date: 6/2025	Project No: S24214	Scale: AS SHOWN

PLAN & PROFILES - LINE 'A' - STATION 6+00-10+00

Drawing No:
PP2

Sheet: 6 OF 26

File: Z:\SHARED\IN CLIENTS A-L\GARRETT\J24214 - SR 8 -CR 15 HOLLMAN PROJECT\06 CAD\A CURRENT FILES\ DRAWINGS\04 - J24214 - PLAN & PROFILE.DWG
Saved: 6/30/2025 11:02:15 AM Plotted: 6/30/2025 11:02:47 AM Current User: Craig Higbie LastSavedBy: chigbie

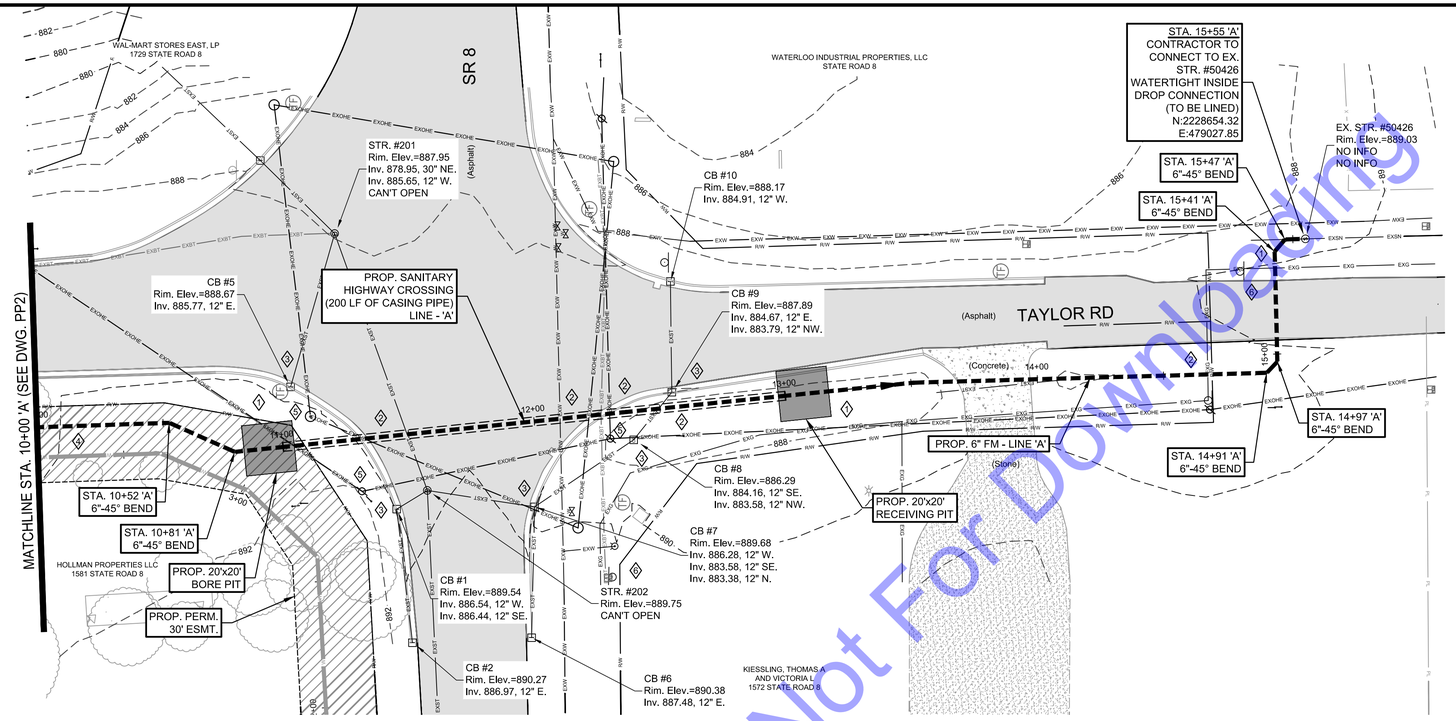

PLAN VIEW

SCALE: 1"=30'-0"

SCALE: 1"=30'

30' 0 30'

NOTE:
THE EXISTING AND PROPOSED PROFILE GRADES ARE BASED ON THE ELEVATIONS AT THE CENTERLINE OF THE PROPOSED SANITARY SEWER.

CODED NOTES

1. SEE EC DRAWINGS FOR EROSION CONTROL MEASURES.
2. CONTRACTOR TO VERIFY EX. UTILITY LOCATIONS PRIOR TO ANY CONSTRUCTION. IN THE EVENT OF UTILITY CONFLICTS, CONTRACTOR SHALL NOTIFY UTILITY TO RELOCATE TO AVOID CONFLICTS.
3. CONTRACTOR TO PROTECT ANY EXISTING STORM SEWER AND STRUCTURES AND/OR FIELD TILE ENCOUNTERED DURING CONSTRUCTION. IF ENCOUNTERED AND DISTURBED, CONTRACTOR TO REPLACE TO A CONDITION EQUAL TO OR BETTER.
4. CONTRACTOR TO MAINTAIN 10' MINIMUM HORIZONTAL SEPARATION BETWEEN WATER AND SANITARY LINES.
5. CONTRACTOR TO PROTECT/SUPPORT UTILITY POLES DURING CONSTRUCTION.
6. DAMAGE TO SIGNS TO BE CONTRACTOR RESPONSIBILITY. REMOVAL AND REPLACEMENT OF SIGNS TO BE CONSIDERED INCIDENTAL TO PROJECT.

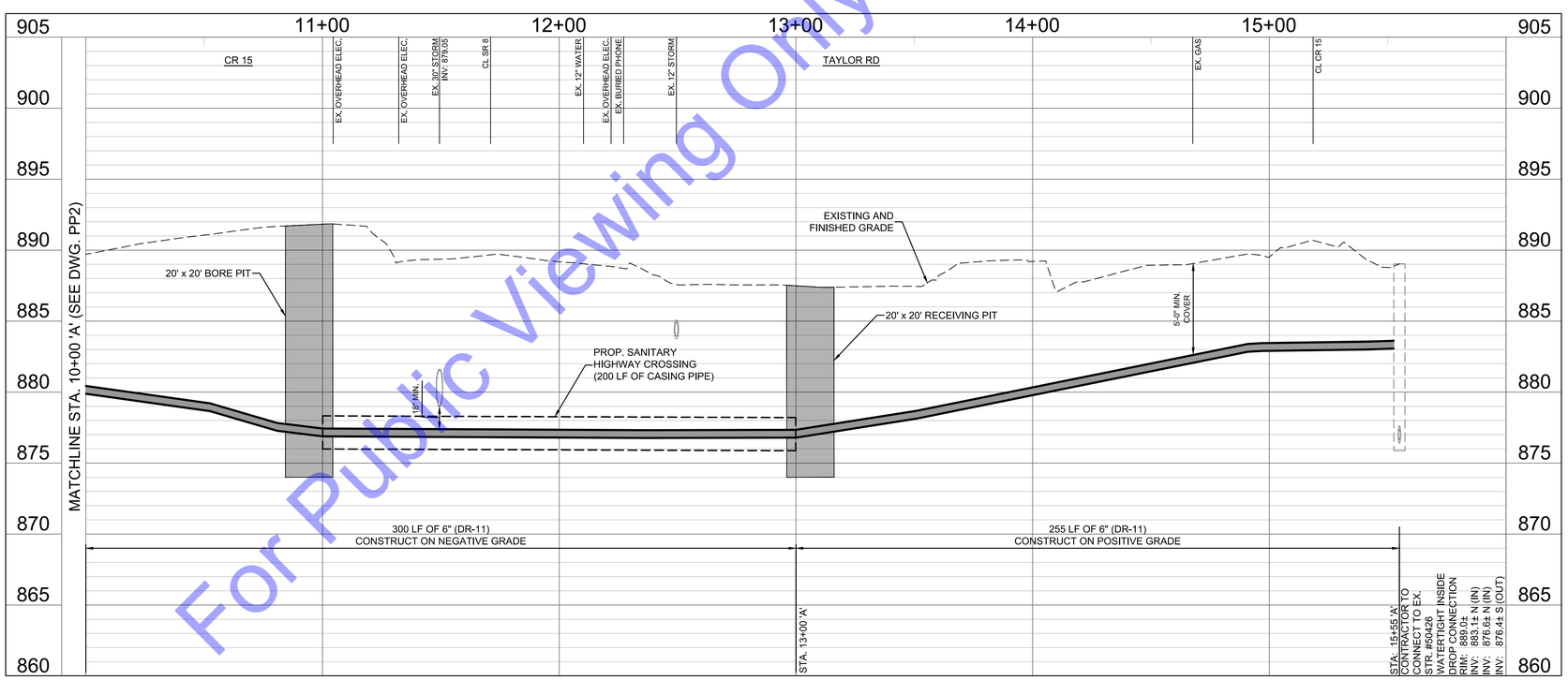

PROFILE - LINE 'A'

HORIZONTAL SCALE: 1"=30'-0"
VERTICAL SCALE: 1"=5'-0"

COMMONWEALTH ENGINEERS, INC.
A wealth of resources to make a difference.
https://commonwealthengineers.com/

BENJAMIN H. ADAMS
REGISTERED
No. 19700508
STATE OF INDIANA
PROFESSIONAL ENGINEER

Signature Date 6/6/2025

No.	Submittal / Revision	By	Date

Designed By:	Drawn By:	Checked By:
BA/BW	CH	NS
Issue Date: 6/2025	Project No: S24214	Scale: AS SHOWN

CITY OF GARRETT, IN
DEKALB COUNTY

SR 8-CR 15
SANITARY SEWER AND WATER MAIN
EXTENSION

Indiana 811
Know what's below. Call before you dig.
Know what's below. 811 before you dig.
1-800-382-5544
(ITS THE LAW)

PLAN & PROFILES -
LINE 'A' - STATION
10+00-15+53

Drawing No:
PP3

Sheet: 7 OF 26

File: Z:\SHARED\IN CLIENTS A-L\GARRETT\J24214 - SR 8 -CR 15 HOLLMAN PROJECT\06 CAD\A CURRENT FILES\1 DRAWINGS\04 - J24214 - PLAN & PROFILE.DWG
Saved: 6/25/2025 1:59:40 PM Plotted: 6/30/2025 9:03:14 AM Current User: Craig Higbie LastSavedBy: chigbie

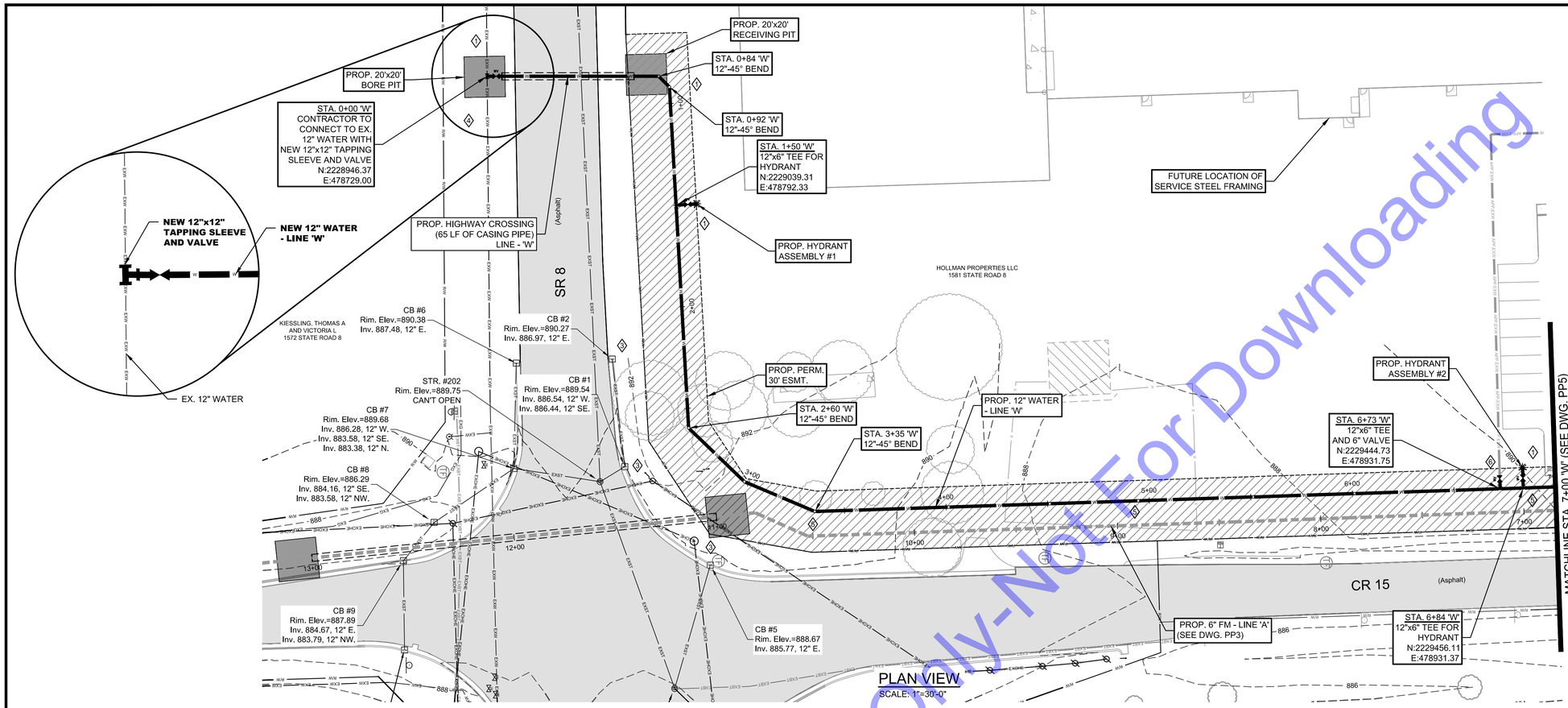

PLAN VIEW

SCALE: 1"=30'-0"

SCALE: 1"=30'

30' 0 30'

NOTE:
THE EXISTING AND PROPOSED PROFILE GRADES ARE BASED ON THE ELEVATIONS AT THE CENTERLINE OF THE PROPOSED WATER MAIN.

CODED NOTES

1. SEE EC DRAWINGS FOR EROSION CONTROL MEASURES.
2. CONTRACTOR TO VERIFY EX. UTILITY LOCATIONS PRIOR TO ANY CONSTRUCTION. IN THE EVENT OF UTILITY CONFLICTS, CONTRACTOR SHALL NOTIFY UTILITY TO RELOCATE TO AVOID CONFLICTS.
3. CONTRACTOR TO PROTECT ANY EXISTING STORM SEWER AND STRUCTURES AND/OR FIELD TILE ENCOUNTERED DURING CONSTRUCTION. IF ENCOUNTERED AND DISTURBED, CONTRACTOR TO REPLACE TO A CONDITION EQUAL TO OR BETTER.
4. EARLY ACTION: CONTRACTOR TO FIELD VERIFY LOCATION AND DEPTH OF EXISTING 12" WATER MAIN PRIOR TO CONSTRUCTION.
5. CONTRACTOR TO MAINTAIN 10' MINIMUM HORIZONTAL SEPARATION BETWEEN WATER AND SANITARY LINES.
6. CONTRACTOR TO COORDINATE LOCATION OF TEE AND VALVE FOR SERVICE CONNECTION WITH SERVICE STEEL FRAMING CONTRACTOR.

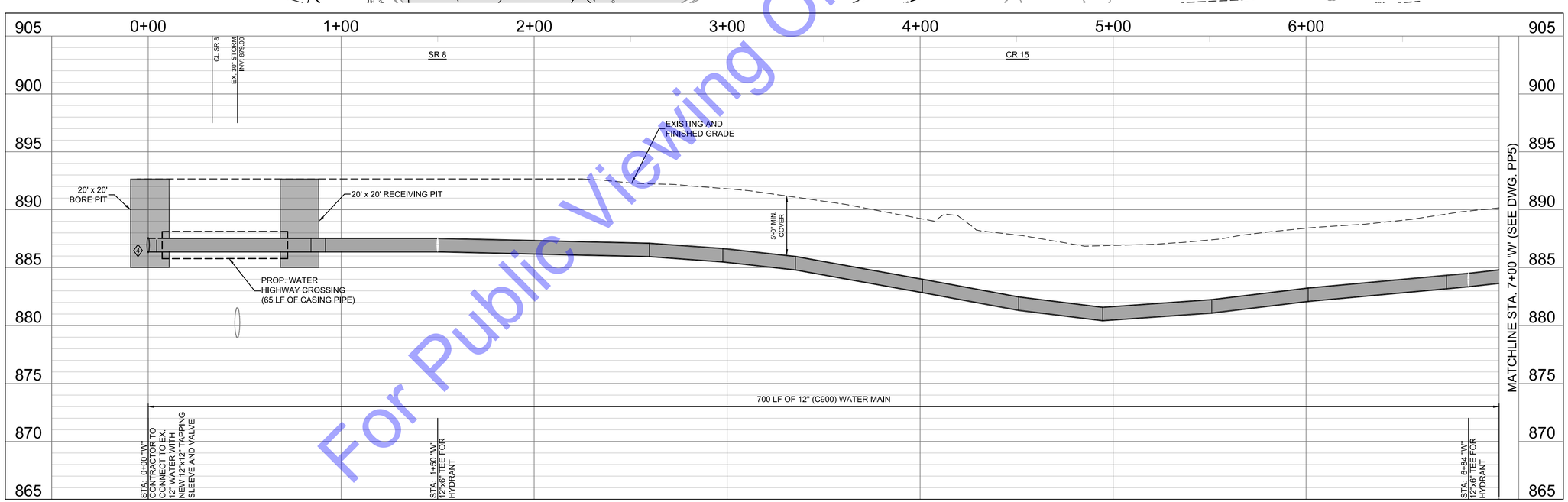

PROFILE - LINE 'W'

HORIZONTAL SCALE: 1"=30'-0"
VERTICAL SCALE: 1"=5'-0"

COMMONWEALTH ENGINEERS, INC.
A wealth of resources to make a difference.
https://commonwealthengineers.com/

BENJAMIN H. ADAMS
REGISTERED No. 19700508 STATE OF INDIANA PROFESSIONAL ENGINEER

Signature Date 6/6/2025

CITY OF GARRETT, IN
DEKALB COUNTY

SR 8-CR 15
SANITARY SEWER AND WATER MAIN EXTENSION

Indiana811 Know what's below. Call before you dig.
Know what's below. 811 before you dig.
1-800-382-5544 (ITS THE LAW)

No.	Submittal / Revision	By	Date

Designed By:	Drawn By:	Checked By:
BA/BW	CH	NS
Issue Date: 6/2025	Project No: S24214	Scale: AS SHOWN

PLAN & PROFILES - LINE 'W' - STATION 0+00-7+00

Drawing No: PP4

Sheet: 8 OF 26

File: Z:\SHARED\IN CLIENTS A-L\GARRETT\J24214 - SR 8 -CR 15 HOLLMAN PROJECT\06 CAD\A CURRENT FILES\1 DRAWINGS\04 - J24214 - PLAN & PROFILE.DWG
Saved: 6/25/2025 1:59:40 PM Plotted: 6/30/2025 9:03:26 AM Current User: Craig Higbie LastSavedBy: chigbie

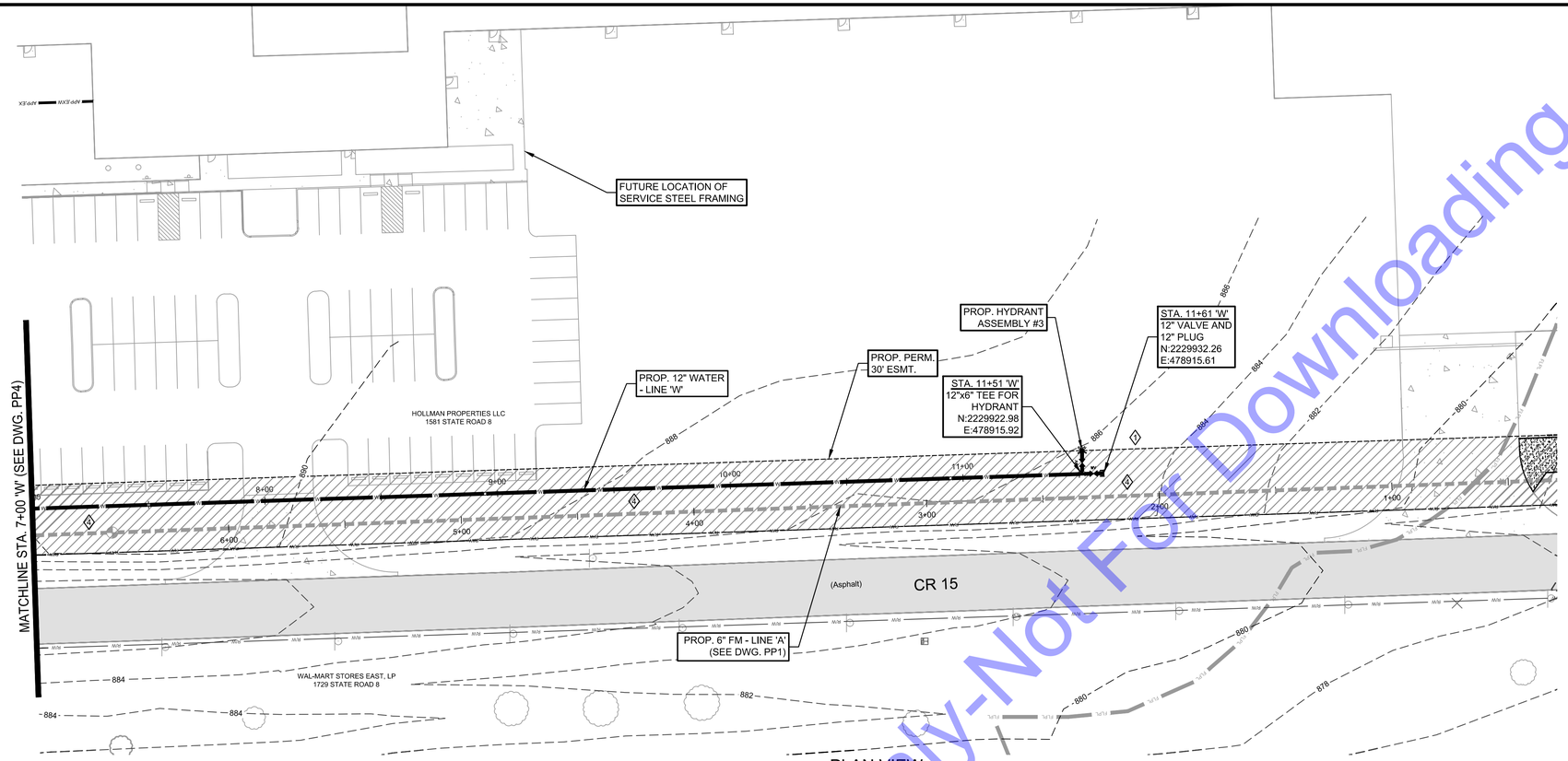

PLAN VIEW
SCALE: 1"=30'-0"

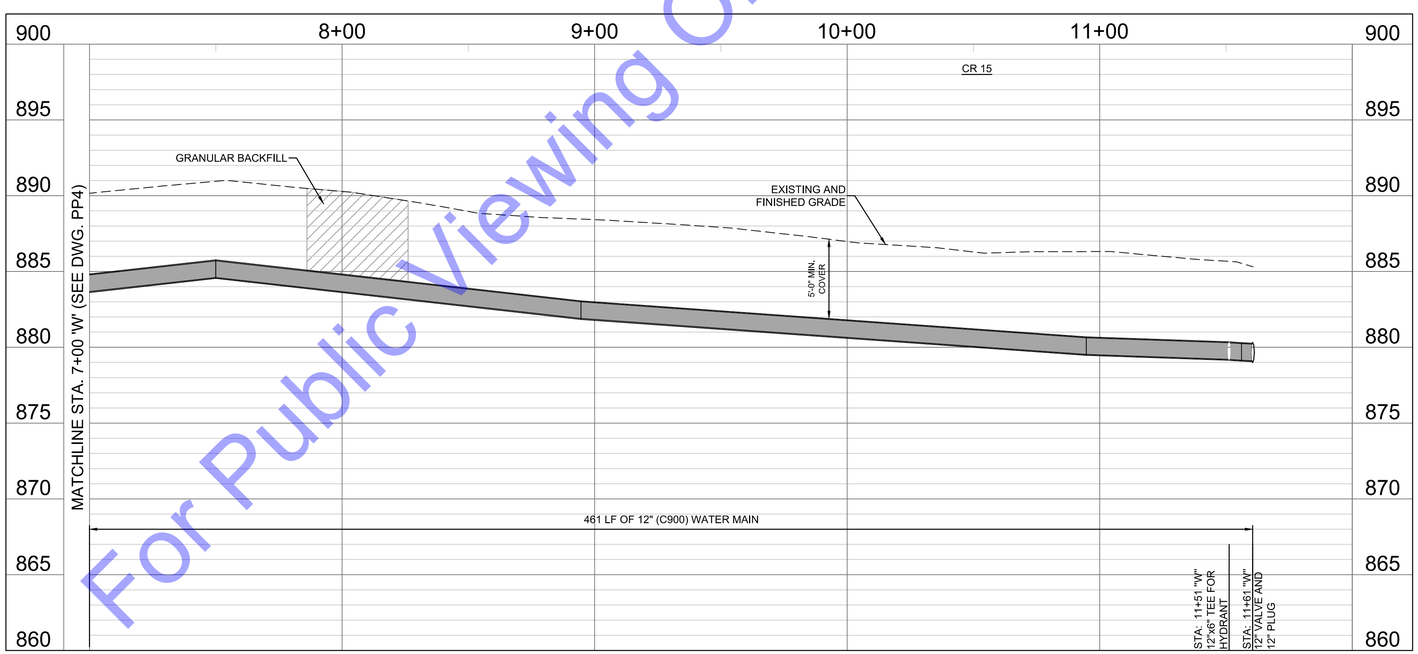

PROFILE - LINE 'W'
HORIZONTAL SCALE: 1"=30'-0"
VERTICAL SCALE: 1"=5'-0"

SCALE: 1"=30'
30' 0 30'

NOTE:
THE EXISTING AND PROPOSED PROFILE GRADES ARE BASED ON THE ELEVATIONS AT THE CENTERLINE OF THE PROPOSED WATER MAIN.

CODED NOTES

1. SEE EC DRAWINGS FOR EROSION CONTROL MEASURES.
2. CONTRACTOR TO VERIFY EX. UTILITY LOCATIONS PRIOR TO ANY CONSTRUCTION. IN THE EVENT OF UTILITY CONFLICTS, CONTRACTOR SHALL NOTIFY UTILITY TO RELOCATE TO AVOID CONFLICTS.
3. CONTRACTOR TO PROTECT ANY EXISTING STORM SEWER AND STRUCTURES AND/OR FIELD TILE ENCOUNTERED DURING CONSTRUCTION. IF ENCOUNTERED AND DISTURBED, CONTRACTOR TO REPLACE TO A CONDITION EQUAL TO OR BETTER.
4. CONTRACTOR TO MAINTAIN 10' MINIMUM HORIZONTAL SEPARATION BETWEEN WATER AND SANITARY LINES.

COMMONWEALTH ENGINEERS, INC.
A wealth of resources to make a difference.
https://commonwealthengineers.com/

BENJAMIN H. ADAMS
REGISTERED No. 19700508 STATE OF INDIANA
PROFESSIONAL ENGINEER
Signature 6/6/2025 Date

CITY OF GARRETT, IN
DEKALB COUNTY

SR 8-CR 15
SANITARY SEWER AND WATER MAIN EXTENSION

Indiana811 Know what's below. Call before you dig.
Know what's below. 811 before you dig.
1-800-382-5544 (YTS THE LAW)

No.	Submittal / Revision	By	Date

Designed By:	Drawn By:	Checked By:
BA/BW	CH	NS
Issue Date: 6/2025	Project No: S24214	Scale: AS SHOWN

PLAN & PROFILES - LINE 'W' - STATION 7+00-12+78

Drawing No:
PP5
Sheet: 9 OF 26

File: Z:\SHARED\IN CLIENTS A-L\GARRETT\J24214 - SR 8 -CR 15 HOLLMAN PROJECT\06 CAD\A CURRENT FILES\1 DRAWINGS\04 - J24214 - PLAN & PROFILE.DWG
Saved: 6/25/2025 1:59:40 PM Plotted: 6/30/2025 9:03:39 AM Current User: Craig Higbie LastSavedBy: chigbie

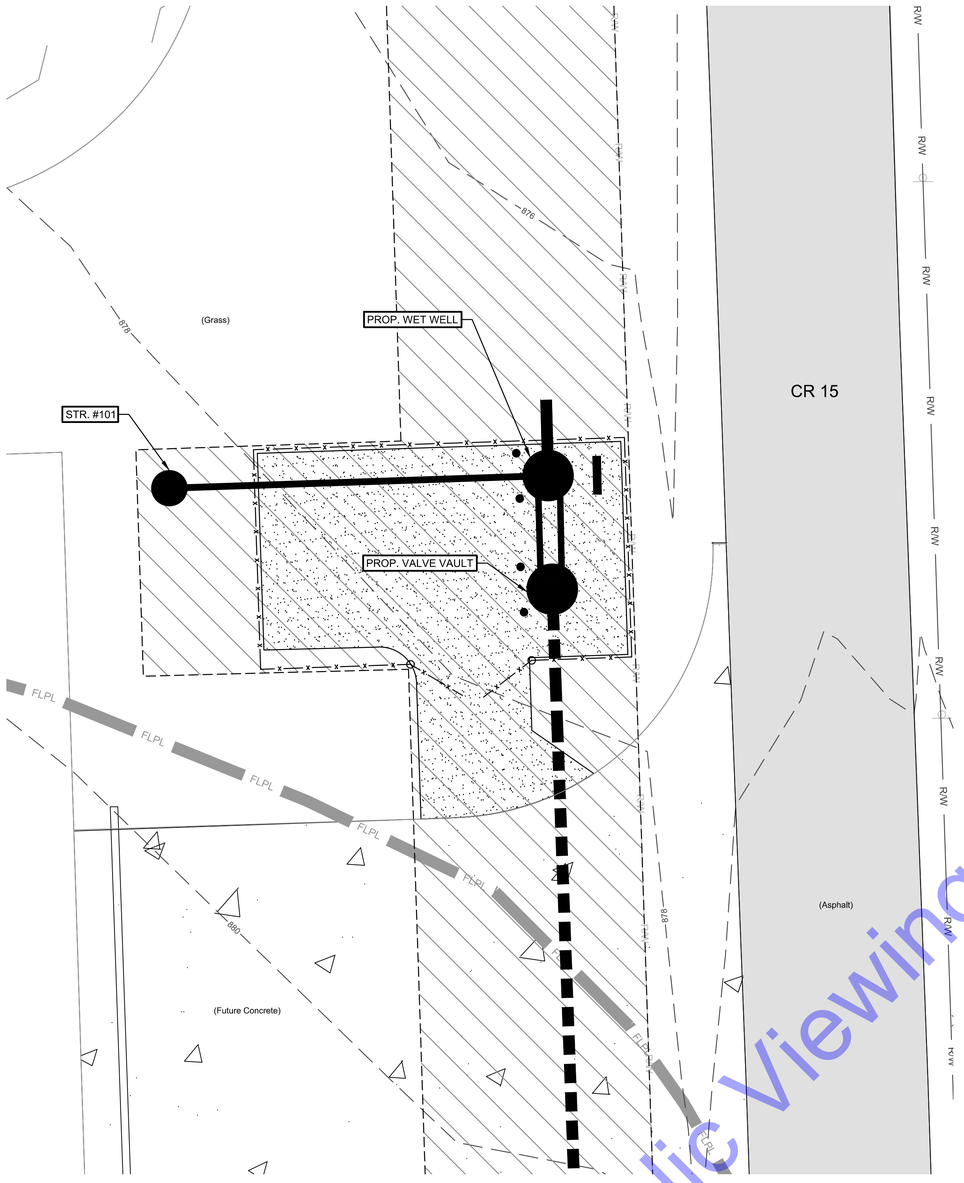

SITE PLAN
SCALE: 1"=10'-0"

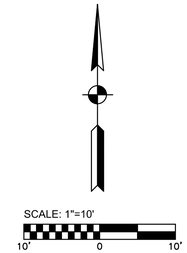

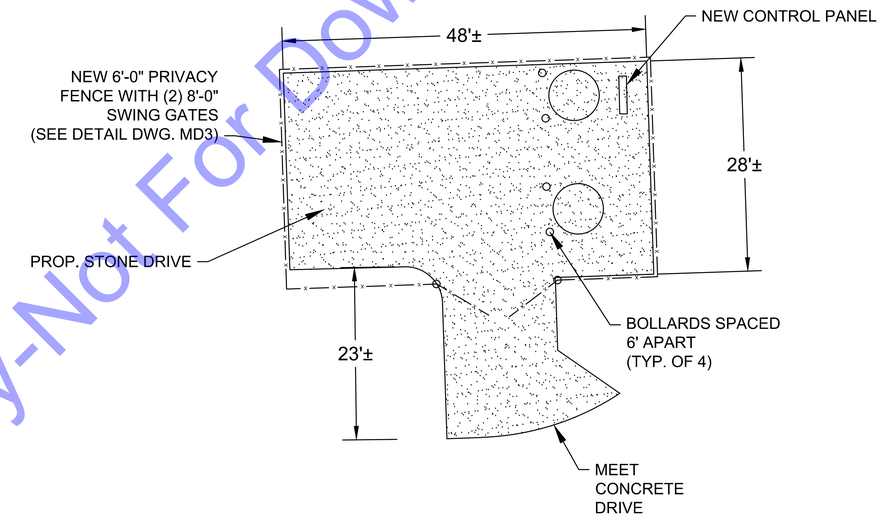

STONE SITE PLAN
AND BOLLARD LAYOUT
SCALE: NONE

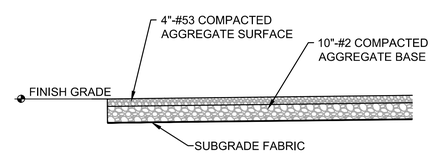

STONE SITE
NO SCALE

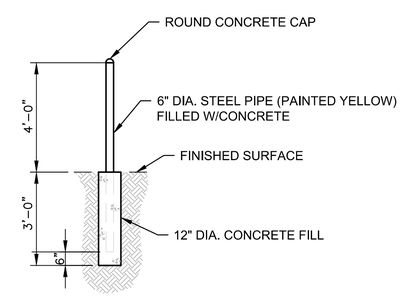

BOLLARD DETAIL
SCALE: NONE

COMMONWEALTH ENGINEERS, INC.
A wealth of resources to make a common job.
https://commonwealthengineers.com/

BENJAMIN H. ADAMS
REGISTERED
No. 19700508
STATE OF INDIANA
PROFESSIONAL ENGINEER

Signature Date 6/6/2025

CITY OF GARRETT, IN
DEKALB COUNTY

SR 8-CR 15
SANITARY SEWER AND WATER MAIN
EXTENSION

Indiana811 Know what's below. Call before you dig.
Know what's below. 811 before you dig.
1-800-382-5544
(ITS THE LAW)

No.	Submittal / Revision	By	Date

Designed By:	Drawn By:	Checked By:
BA/BW	CH	NS
Issue Date: 6/2025	Project No: S24214	Scale: AS SHOWN

LIFT STATION - SITE PLAN

Drawing No:
LS1

Sheet: 10 OF 26

File: Z:\SHARED\IN CLIENTS A-L\GARRETT\J24214 - SR 8 -CR 15 HOLLMAN PROJECT\06 CAD\A CURRENT FILES\1 DRAWINGS\05 - J24214 - LIFT STATION.DWG
Saved: 6/19/2025 11:58:27 AM Plotted: 6/30/2025 9:04:19 AM Current User: Craig Higbie LastSavedBy: chigbie

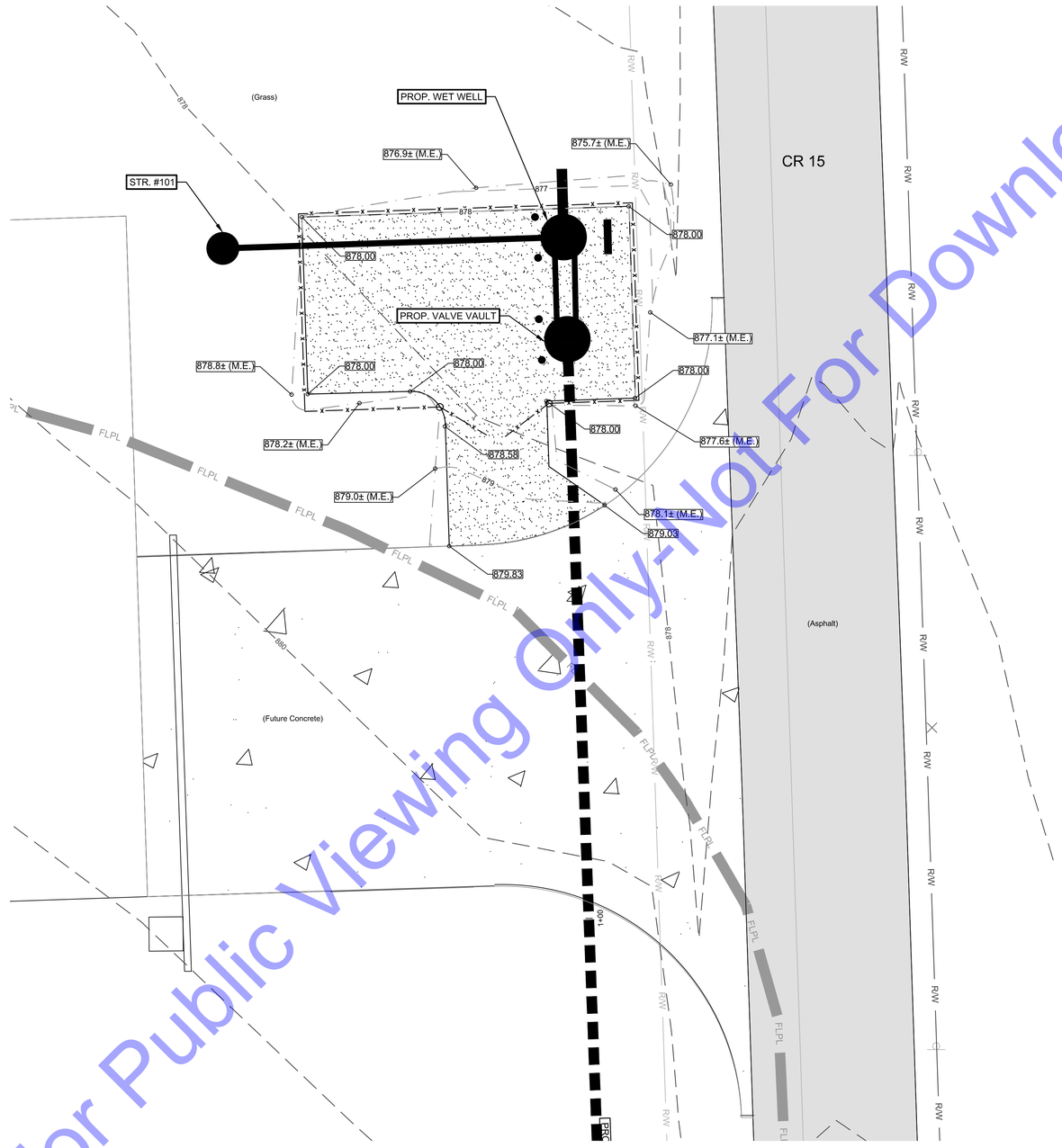

GRADING PLAN

SCALE: 1"=10'-0"

SPOT ELEVATION LEGEND

800.0±(M.E.)	MATCH EXISTING ELEVATION
800.00	SPOT ELEVATION

CONTOUR LEGEND

800	PROPOSED CONTOUR
800	EXISTING CONTOUR
	GRADING LIMITS

SCALE: 1"=10'

10' 0 10'

COMMONWEALTH ENGINEERS, INC.
A wealth of resources to make a common goal.
https://commonwealthengineers.com/

BENJAMIN H. ADAMS
REGISTERED No. 19700508 STATE OF INDIANA
PROFESSIONAL ENGINEER

Signature Date 6/6/2025

CITY OF GARRETT, IN
DEKALB COUNTY

SR 8-CR 15
SANITARY SEWER AND WATER MAIN EXTENSION

Indiana811 Know what's below. Call before you dig.
Know what's below. 811 before you dig.
1-800-382-5544
(ITS THE LAW)

No.	Submittal / Revision	By	Date

Designed By:	Drawn By:	Checked By:
BA/BW	CH	NS
Issue Date: 6/2025	Project No: S24214	Scale: AS SHOWN

LIFT STATION - GRADING PLAN

Drawing No: LS2

Sheet: 11 OF 26

File: Z:\SHARED\IN CLIENTS A-L\GARRETT\J24214 - SR 8 -CR 15 HOLLMAN PROJECT\06 CAD\A CURRENT FILES\1 DRAWINGS\05 - J24214 - LIFT STATION.DWG
Saved: 6/19/2025 11:58:27 AM Plotted: 6/30/2025 9:04:29 AM Current User: Craig Higbie LastSavedBy: chigbie

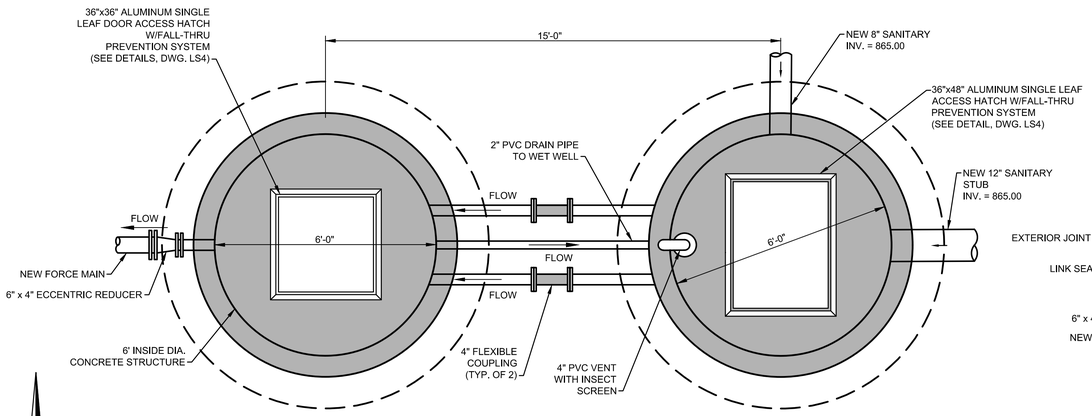

VALVE VAULT PROPOSED TOP PLAN WET WELL

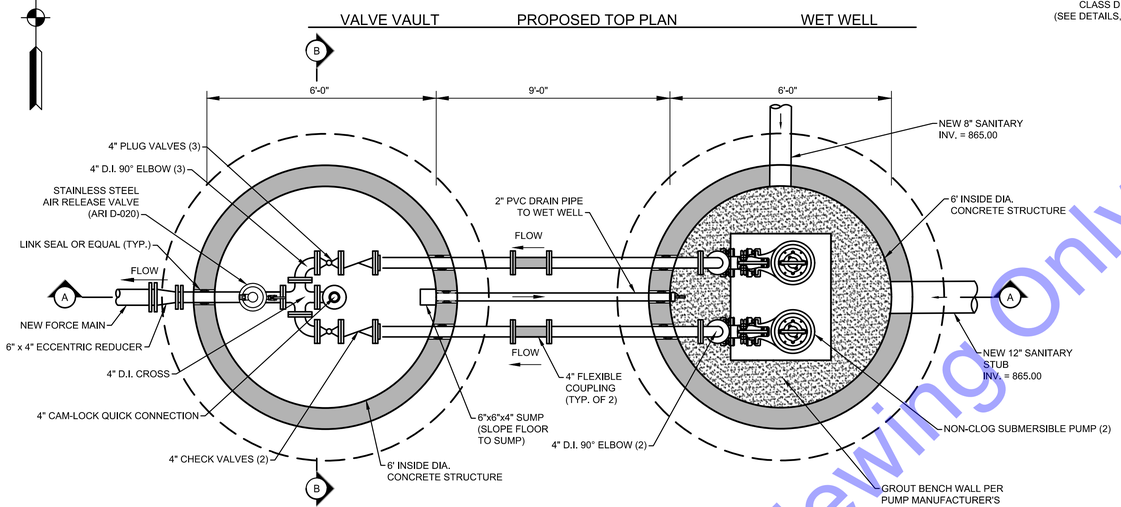

VALVE VAULT PROPOSED BOTTOM PLAN WET WELL

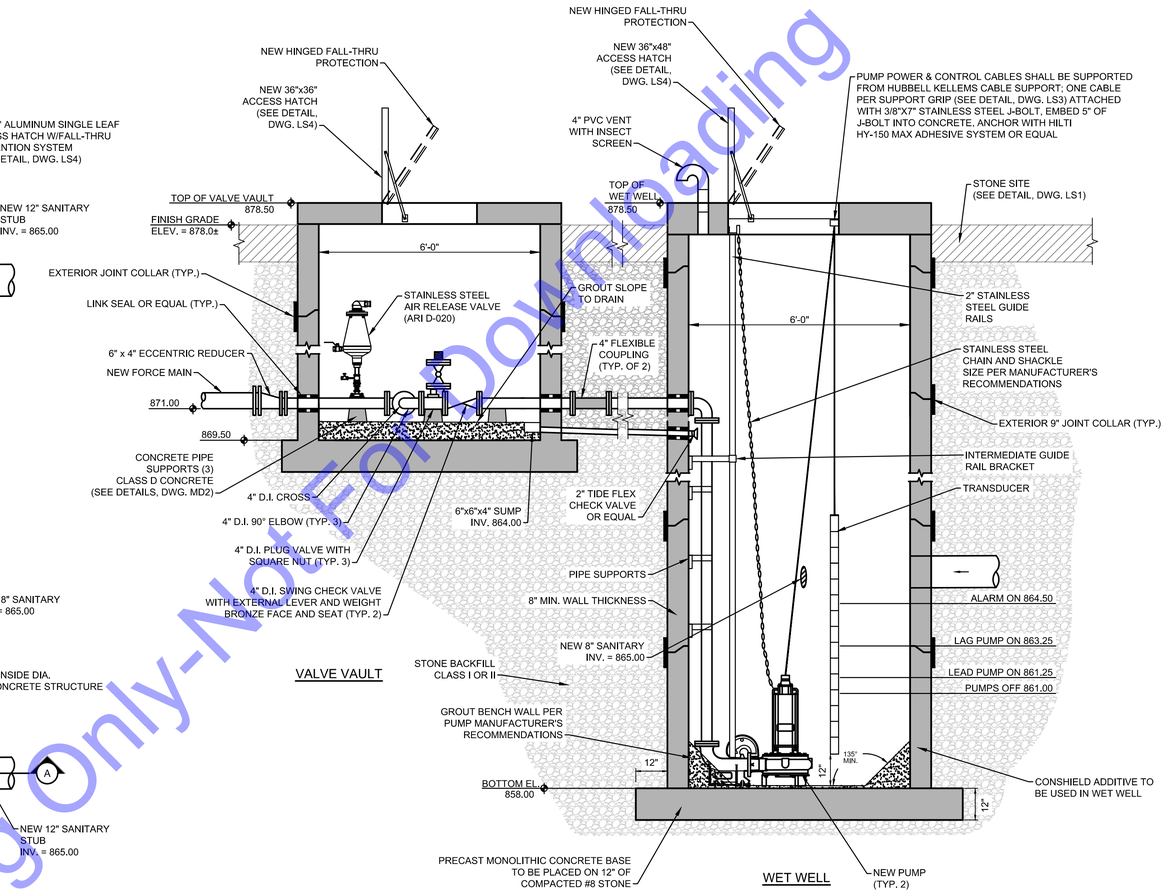

SECTION A

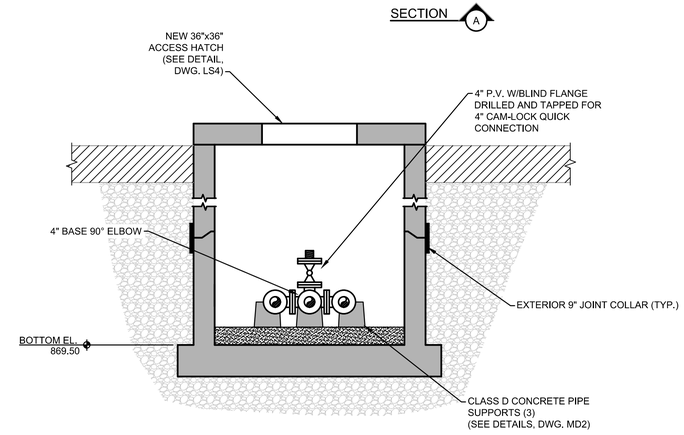

SECTION B

PUMP SCHEDULE

	LOCATION	GPM	TDH(ft.)	RPM	HP	MODEL
INITIAL	CR 15 LIFT STATION	145 GPM	45'	1762	5.5	GRUNDFOS SLV.30.A40.55/4

NOTES:
1. LIFT STATION PUMPS TO BE SUBMERSIBLE CENTRIFUGAL NON-CLOG PUMPS CAPABLE OF 145 GPM @ 45' TDH @ 1792 RPM TO BE FURNISHED WITH 5.5 HP, 230/460 V, 3Ø, 60 Hz, SUBMERSIBLE MOTORS CAPABLE OF PASSING 3" SOLIDS.
2. THE NEMA 4X, STAINLESS STEEL CONTROL PANEL SUPPLIED BY THE CONTRACTOR SHALL BE AS SHOWN IN THE DRAWINGS AND AS SPECIFIED WITH IN THE LIFT STATION DETAILED SPECIFICATIONS.
3. ALL ELECTRICAL EQUIPMENT AND WIRING TO CONFORM TO THE LATEST EDITION OF THE NATIONAL ELECTRIC CODE. SEE THE CONTROL PANEL MANUFACTURER'S DRAWING AND DETAILS FOR POWER AND CONTROL WIRING CONNECTIONS TO THE PUMPS.
4. PUMP AND DISCHARGE PIPE INSIDE LIFT STATION AND VALVE VAULT TO BE FLANGED, DUCTILE IRON PIPE. OUTSIDE PIPING TO BE MECHANICAL JOINT, DUCTILE IRON PIPE.
5. CHECK VALVES SHALL BE IRON BODY, FULL BRONZE MOUNTED, NON-SLAMMING TYPE, OPERATE WITHOUT EXCESS LOSS OF HEAD, BE DESIGNED FOR NOT LESS THAN 175 PSI COLD WATER WORKING PRESSURE, AND HAVE BRONZE HINGES, STAINLESS STEEL HINGE PINS, FULL BRONZE MOUNTED, RUBBER FACE DISCS, WITH RAISED BEAD SEAT RINGS, BE SWING-CHECK TYPE, FLANGED, FACED AND DRILLED 125# ASA WITH OUTSIDE WEIGHT AND LEVER. CHECK VALVES SHALL BE MANUFACTURED BY CLOW, KENNEDY OR M&H VALVE COMPANY.
6. PLUG VALVES SHALL BE AWWA C-509 WITH SEMI-STEEL CONSTRUCTION WITH CLASS B RESILIENT BUNA-N FACED PLUGS, FUSION BOND EPOXY COATED INSIDE AND OUT, BE DESIGNED FOR 150 PSI WORKING PRESSURE AND FLANGED, FACED AND DRILLED 125# ASA WITH 2" OPERATING NUT. ALL PLUG VALVES SHALL BE MANUFACTURED BY DEZURIK, PEC TYPE.
7. ALL NUTS AND BOLTS INSIDE LIFT STATION AND VALVE VAULT SHALL BE STAINLESS STEEL.
8. STAINLESS STEEL PIPE GUIDES, LIFTING CABLES & FLOAT CHAIN TO BE 316 S.S.

COMMONWEALTH ENGINEERS, INC.
A wealth of resources to make a difference.
https://commonwealthengineers.com/

BENJAMIN H. ADAMS REGISTERED No. 19700508 STATE OF INDIANA PROFESSIONAL ENGINEER
Signature Date 6/6/2025

CITY OF GARRETT, IN
DEKALB COUNTY

SR 8-CR 15
SANITARY SEWER AND WATER MAIN EXTENSION

Indiana 811 Know what's below. Call before you dig.
Know what's below. 811 before you dig.
1-800-382-5544 (ITS THE LAW)

No.	Submittal / Revision	By	Date

Designed By:	Drawn By:	Checked By:
BA/BW	CH	NS
Issue Date: 6/2025	Project No: S24214	Scale: AS SHOWN

CR15 LIFT STATION - PLAN & SECTION

Drawing No: LS3

Sheet: 12 OF 26

File: Z:\SHARED\IN CLIENTS A-L\GARRETT\J24214 - SR 8 -CR 15 HOLLMAN PROJECT\06 CAD\A CURRENT FILES\ DRAWINGS\05 - J24214 - LIFT STATION.DWG
Saved: 6/19/2025 11:58:27 AM Plotted: 6/30/2025 9:04:33 AM Current User: Craig Higbie LastSavedBy: chigbie

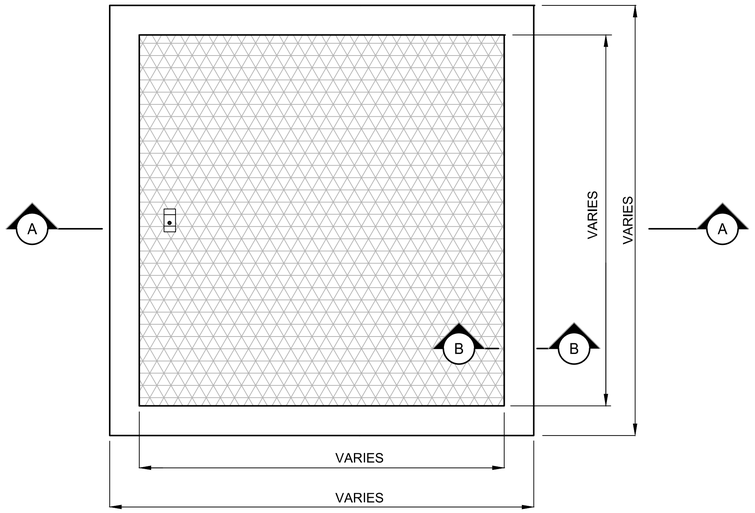

PLAN - SINGLE LEAF ACCESS HATCH

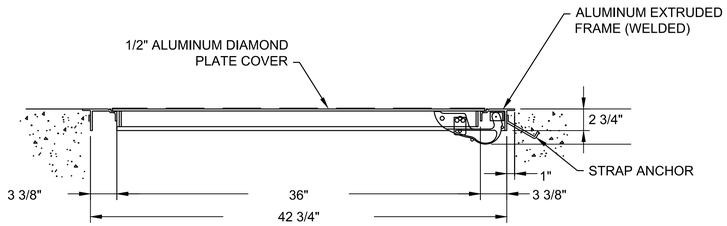

SECTION A

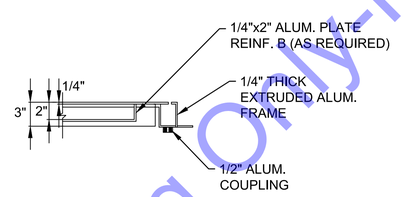

FRAME TYPE I

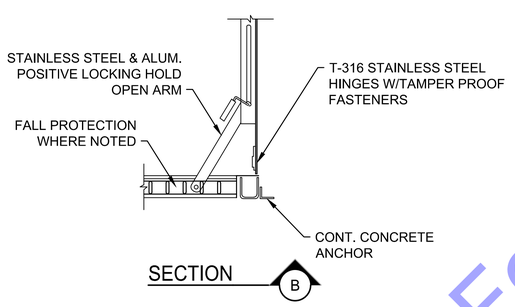

SECTION B

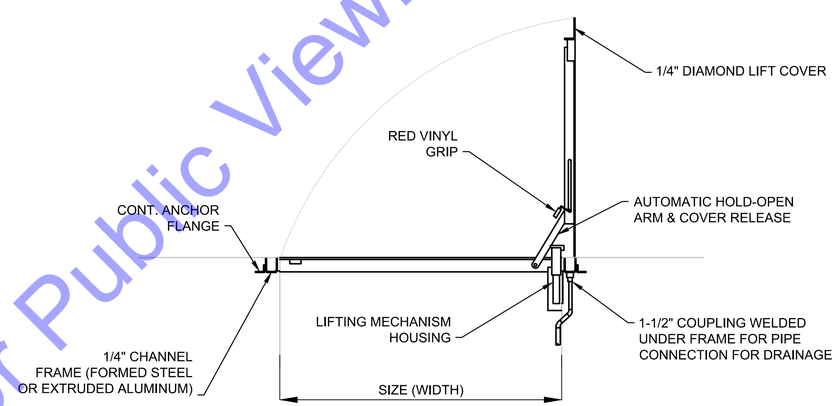

SINGLE LEAF ACCESS DOOR

COMMONWEALTH ENGINEERS, INC.
A wealth of resources to make a common goal.
https://commonwealthengineers.com/

BENJAMIN H. ADAMS
REGISTERED
No. 19700508
STATE OF INDIANA
PROFESSIONAL ENGINEER

Signature Date 6/6/2025

CITY OF GARRETT, IN
DEKALB COUNTY

SR 8-CR 15
SANITARY SEWER AND WATER MAIN EXTENSION

Indiana 811
Know what's below. Call before you dig.
Know what's below. 811 before you dig.
1-800-382-5544
(ITS THE LAW)

No.	Submittal / Revision	By	Date

Designed By:	Drawn By:	Checked By:
BA/BW	CH	NS
Issue Date: 6/2025	Project No: S24214	Scale: AS SHOWN

HATCH ACCESS DETAILS

Drawing No:
LS4

Sheet: 13 OF 26

File: Z:\SHARED\IN CLIENTS A-L\GARRETT\J24214 - SR 8 -CR 15 HOLLMAN PROJECT\06 CAD\A CURRENT FILES\1 DRAWINGS\05 - J24214 - LIFT STATION.DWG
Saved: 6/19/2025 11:58:27 AM Plotted: 6/30/2025 9:04:35 AM Current User: Craig Higbie LastSavedBy: chigbie

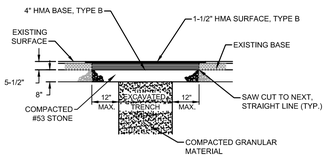

LOCAL ASPHALT PAVEMENTS - ROADS, DRIVES, ALLEYS, AND PARKING AREAS WITHIN PUBLIC RIGHT-OF-WAY

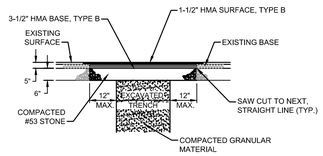

ASPHALT PAVEMENT-DRIVES AND PARKING AREAS OUTSIDE OF PUBLIC RIGHT-OF-WAY

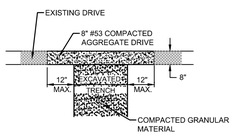

GRAVEL ROAD-DRIVE REPLACEMENT

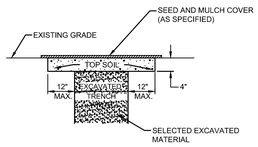

GRASSED AREA

SURFACE REPLACEMENT DETAILS
NO SCALE

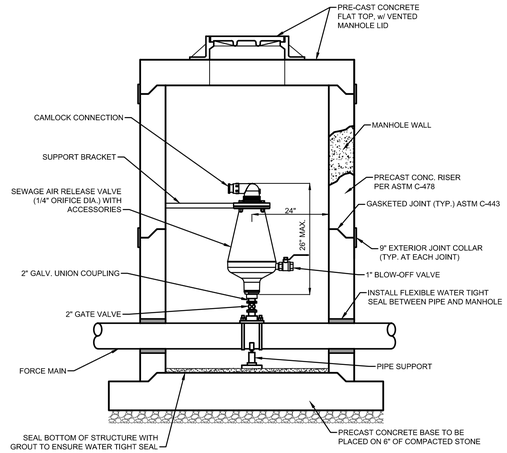

AIR RELEASE VALVE
NO SCALE

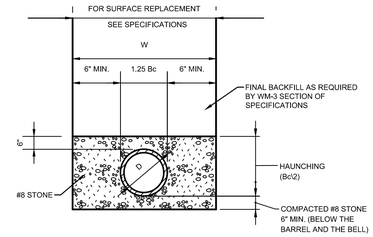

W = MINIMUM ALLOWABLE TRENCH WIDTH FOR PIPE AS PER ASTM D2321
D = PIPE DIAMETER (INTERNAL)
Bc = PIPE DIAMETER (EXTERNAL)

NOTES:

1. COMPACTED #8 STONE AND HAUNCHING STOP AT 6 INCHES ABOVE THE TOP OF THE PIPE. BACKFILLING ABOVE THIS POINT SHALL BE IN ACCORDANCE WITH THE DETAILED SPECIFICATIONS AND AS REQUIRED HEREIN.
2. WORK FALLING UNDER THE JURISDICTION OF THE INDIANA DEPARTMENT OF TRANSPORTATION (INDOT) SHALL UTILIZE COMPACTED GRANULAR BACKFILL MATERIAL FOR INITIAL AND FINAL BACKFILL ANYWHERE WITHIN 12 FEET OF THE EDGE OF PAVEMENT. FOR ALL OTHER NON-INDOT PAVEMENT AREAS (INCLUDING BOTH HARD SURFACED AND COMPACTED AGGREGATE), COMPACTED GRANULAR BACKFILL MATERIAL SHALL BE USED WITHIN 5 FEET OF THE EDGE OF THE PAVEMENT.

TRENCH DETAIL FOR RIGID CONDUITS
NO SCALE

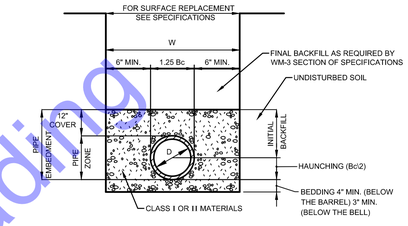

W = MAXIMUM ALLOWABLE TRENCH WIDTH FOR PIPE AS PER ASTM NOT TO EXCEED FOUR (4) FEET FOR 6" THROUGH 24" PIPE NOR SIX (6) FEET FOR 27" THROUGH 48" PIPE
D = PIPE DIAMETER (INTERNAL)
Bc = PIPE DIAMETER (EXTERNAL)

NOTES:

1. COMPACTED INITIAL BACKFILL SHALL EXTEND A MINIMUM OF 12" ABOVE THE TOP OF THE PIPE. FINAL BACKFILL ABOVE THIS POINT SHALL BE IN ACCORDANCE WITH THE SPECIFICATIONS AND AS REQUIRED HEREIN.
2. WHEN CLASS I MATERIAL IS USED FOR BEDDING, HAUNCHING, AND INITIAL BACKFILL COMPACTION MAY BE ACCOMPLISHED BY HAND OR MECHANICAL TAMPING, OR BY WALKING TO A MINIMUM OF 85% STANDARD PROCTOR DENSITY.
3. WHEN CLASS II MATERIAL IS USED FOR BEDDING, HAUNCHING, AND INITIAL BACKFILL COMPACTION MAY BE ACCOMPLISHED BY HAND OR MECHANICAL TAMPING TO A MINIMUM OF 85% STANDARD PROCTOR DENSITY.
4. WORK FALLING UNDER THE JURISDICTION OF THE INDIANA DEPARTMENT OF TRANSPORTATION (INDOT) SHALL UTILIZE COMPACTED GRANULAR BACKFILL MATERIAL FOR INITIAL AND FINAL BACKFILL ANYWHERE WITHIN 12 FEET OF THE EDGE OF PAVEMENT. FOR ALL OTHER NON-INDOT PAVEMENT AREAS (INCLUDING BOTH HARD SURFACED AND COMPACTED AGGREGATE), COMPACTED GRANULAR BACKFILL MATERIAL SHALL BE USED WITHIN 5 FEET OF THE EDGE OF THE PAVEMENT.

TRENCH DETAIL FOR FLEXIBLE CONDUITS
NO SCALE

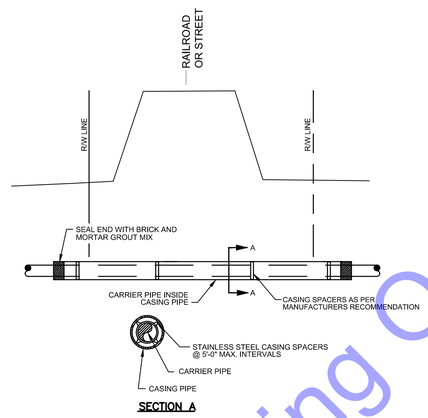

JACK AND BORE DETAIL
NO SCALE

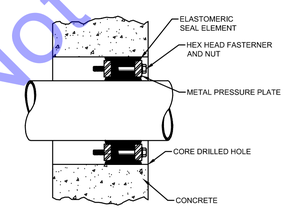

CORE DRILL/WATERTIGHT DETAIL
NO SCALE

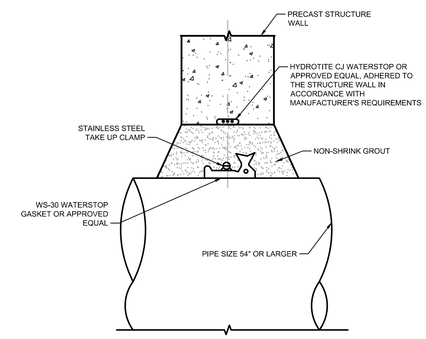

GROUTING RING DETAIL
NO SCALE

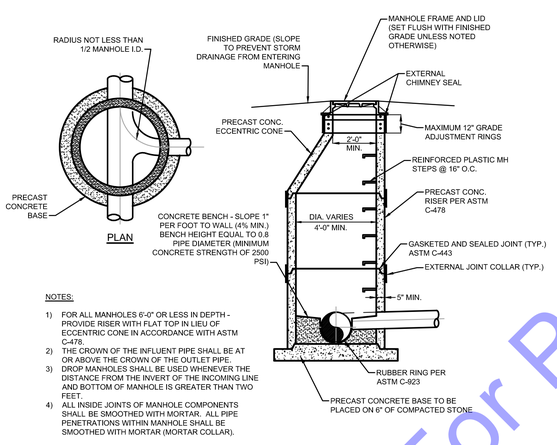

NOTES:

1) FOR ALL MANHOLES 6'-0" OR LESS IN DEPTH - PROVIDE RISER WITH FLAT TOP IN LIEU OF ECCENTRIC CONE IN ACCORDANCE WITH ASTM C-478.
2) THE CROWN OF THE INFLUENT PIPE SHALL BE AT OR ABOVE THE CROWN OF THE OUTLET PIPE.
3) DROP MANHOLES SHALL BE USED WHENEVER THE DISTANCE FROM THE INVERT OF THE INCOMING LINE AND BOTTOM OF MANHOLE IS GREATER THAN TWO FEET.
4) ALL INSIDE JOINTS OF MANHOLE COMPONENTS SHALL BE SMOOTHED WITH MORTAR. ALL PIPE PENETRATIONS WITHIN MANHOLE SHALL BE SMOOTHED WITH MORTAR (MORTAR COLLAR).

STANDARD MANHOLE DETAIL
NO SCALE

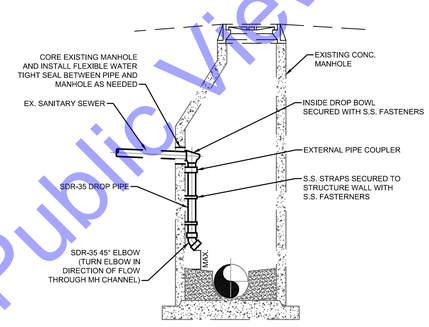

INSIDE DROP INTO EXISTING MANHOLE
NO SCALE

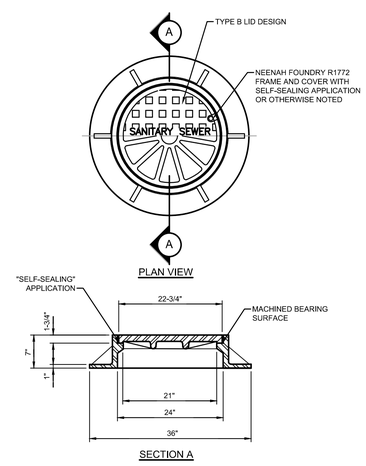

SANITARY SEWER MANHOLE FRAME AND COVER - STANDARD MANHOLE
NO SCALE

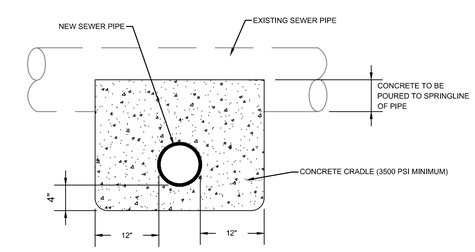

CONCRETE CRADLE DETAIL
NO SCALE

COMMONWEALTH ENGINEERS, INC.
A wealth of resources to make a stronger you.
https://commonwealthengineers.com/

REGISTERED BENJAMIN H. ADAMS No. 19700508 STATE OF INDIANA PROFESSIONAL ENGINEER

Signature Date 6/6/2025

CITY OF GARRETT, IN
DEKALB COUNTY

SR 8-CR 15
SANITARY SEWER AND WATER MAIN EXTENSION

Indiana 811 Know what's below. Call before you dig.
Know what's below. 811 before you dig.
1-800-382-5544 (ITS THE LAW)

No.	Submittal / Revision	By	Date

Designed By:	Drawn By:	Checked By:
BA/BW	CH	NS
Issue Date: 6/2025	Project No: S24214	Scale: AS SHOWN

MISCELLANIOUS DETAILS

Drawing No: MD1

Sheet: 14 OF 26

File: Z:\SHARED\IN CLIENTS A-L\GARRETT\J24214 - SR 8 -CR 15 HOLLMAN PROJECT\06 CAD\A CURRENT FILES\ DRAWINGS\06 - J24214 - MISC DETAILS.DWG
Saved: 6/25/2025 1:58:17 PM Plotted: 6/30/2025 9:05:07 AM Current User: Craig Higbie LastSavedBy: chigbie

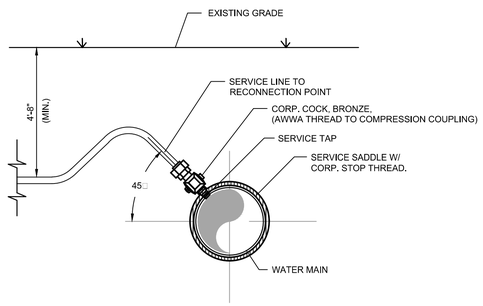

NEW SERVICE CONNECTION DETAIL
NO SCALE

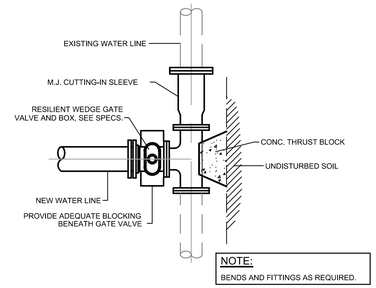

DRY CONNECTION TO EXISTING WATER MAIN
NO SCALE

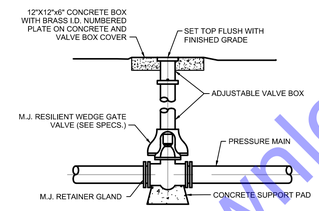

BURIED GATE VALVE AND BOX DETAIL
NO SCALE

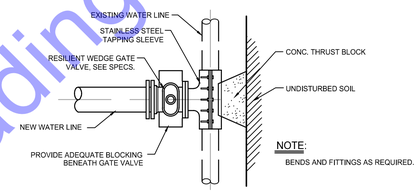

WET CONNECTION TO EXISTING WATER MAIN
NO SCALE

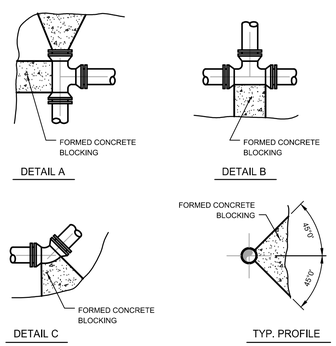

DETAIL A
DETAIL B
DETAIL C
TYP. PROFILE

TABLE OF DIMENSION FOR CONCRETE BLOCKING																								
SIZE	TEE				PLUG					90° BEND				45° BEND				22½° BEND				11¼° BEND			
PIPE	L	T	W	D	L	T	W	D	s	L	T	W	D	L	T	W	D	L	T	W	D	L	T	W	D
4"	18"	12"	12"	8"	18"	12"	18"	18"	2"	24"	12"	24"	8"	18"	8"	12"	8"	18"	8"	12"	8"	15"	8"	12"	6"
6"	18"	12"	12"	8"	18"	12"	18"	18"	2"	24"	15"	24"	8"	18"	10"	12"	8"	18"	10"	12"	8"	18"	10"	18"	6"
8"	30"	12"	24"	8"	30"	18"	30"	24"	4"	36"	16"	30"	8"	24"	12"	18"	8"	24"	18"	18"	8"	24"	12"	18"	8"
10"	36"	18"	30"	10"	36"	18"	36"	24"	4"	48"	20"	36"	10"	30"	14"	24"	10"	30"	14"	24"	10"	24"	14"	18"	8"
12"	48"	18"	36"	10"	42"	18"	42"	24"	4"	54"	24"	48"	10"	36"	16"	30"	10"	36"	16"	30"	10"	30"	16"	24"	10"
14"	54"	24"	42"	12"	48"	18"	48"	30"	6"	60"	28"	60"	12"	42"	16"	42"	12"	42"	16"	42"	12"	33"	16"	27"	12"
16"	60"	24"	48"	12"	54"	18"	54"	30"	6"	66"	32"	63"	12"	48"	18"	48"	12"	48"	18"	48"	12"	36"	18"	30"	12"
18"	66"	30"	54"	14"	60"	24"	60"	36"	6"	66"	36"	66"	14"	54"	18"	54"	14"	54"	18"	54"	14"	39"	18"	33"	14"
20"	72"	30"	60"	14"	66"	24"	66"	36"	8"	72"	40"	69"	14"	60"	20"	60"	14"	60"	20"	60"	14"	42"	20"	36"	14"
24"	84"	36"	72"	18"	78"	30"	78"	42"	8"	84"	48"	75"	18"	72"	22"	72"	18"	72"	22"	72"	18"	48"	22"	42"	18"

NOTES:

1. FOR TEE WITH BRANCH UNEQUAL TO RUN USE TEE TYPE KICKER WITH D, L, AND W DIMENSIONS THE SAME AS THOSE FOR PLUG WITH SAME DIAMETER AS BRANCH OF TEE. SELECT "T" DIMENSIONS FROM TEE TABLE UNDER COLUMN HEADED BY THE SIZE OF THE BRANCH.
2. IF EXACT SIZE PIPE BLOCKING IS NOT SHOWN USE NEXT LARGER SIZE.
3. DEPTH "D" MAY BE GREATER THAN SPECIFIED TO ALLOW WORKING SPACE. BLOCKING MUST BE PLACED AGAINST UNDISTURBED EARTH OR ROCK.
4. CONCRETE BLOCKING SHALL BE CLASS "B".

THRUST BLOCKING DETAIL
NO SCALE

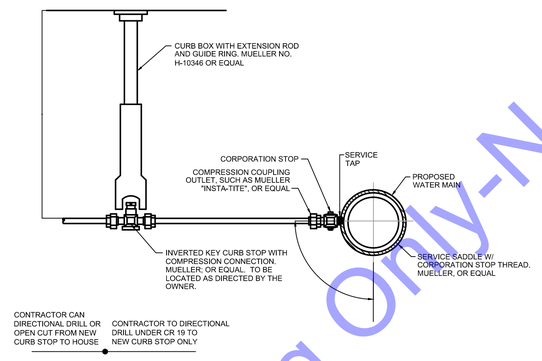

NEW SERVICE CONNECTION DETAIL
NO SCALE

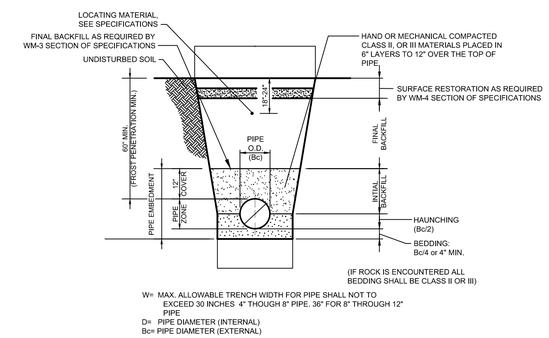

W= MAX. ALLOWABLE TRENCH WIDTH FOR PIPE SHALL NOT TO EXCEED 30 INCHES 4" THOUGH 8" PIPE. 36" FOR 8" THROUGH 12" PIPE
D= PIPE DIAMETER (INTERNAL)
Bc= PIPE DIAMETER (EXTERNAL)

APPLICATION	BEDDING & HAUNCHING INITIAL BACKFILL	FINAL BACKFILL
GRASSY AREA OR NEW PAVED AREAS	CLASS I, OR II MATERIAL (REFER TO WORKMANSHIP & MATERIALS SPECIFICATIONS	SELECTED EXCAVATED MATERIAL
PAVEMENT AREA OR ANY AREA SUBJECT TO VEHICULAR TRAFFIC	CLASS I, II, OR III MATERIAL (REFER TO WORKMANSHIP & MATERIALS SPECIFICATIONS	COMPACTED GRANULAR MATERIAL

NOTES:

1. INITIAL BACKFILL STOPS AT A POINT 12" ABOVE THE TOP OF THE PIPS BACKFILLING ABOVE THIS POINT SHALL BE IN ACCORDANCE WITH THE SPECIFICATIONS AND AS REQUIRED BY HEREIN
2. BEDDING, HAUNCHING, AND INITIAL BACKFILL SHALL BE CLASS I, II, OR III MATERIALS ACCORDING TO THE THE WORKMANSHIP AND MATERIALS SPECIFICATIONS
3. WORK FALLING UNDER THE JURISDICTION OF THE INDIANA DEPARTMENT OF TRANSPORTATION (INDOT) SHALL UTILIZE COMPACTED GRANULAR BACKFILL MATERIAL FOR INITIAL AND FINAL BACKFILL ANYWHERE WITHIN 12 FEET OF THE EDGE OF PAVEMENT.
4. WORK NOT FALLING UNDER THE JURISDICTION OF INDOT SHALL UTILIZE COMPACTED GRANULAR BACKFILL MATERIAL FOR INITIAL AND FINAL BACKFILL ANYWHERE WITHIN 5 FEET OF THE EDGE OF PAVEMENT

TRENCH DETAIL FOR WATER MAIN
NO SCALE

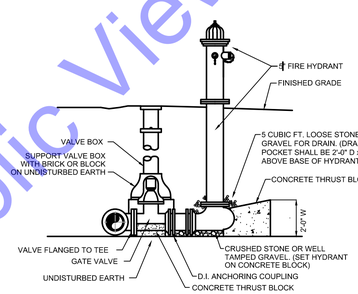

FIRE HYDRANT DETAIL
NO SCALE

DESIGN CRITERIA FOR RESTRAINT JOINT REQUIREMENTS					
PIPE	SOIL	SAFETY FACTOR	TRENCH TYPE	DEPTH	TEST PRESSURE
PVC	CL	2	5	5'	200 PSI

HORIZONTAL BENDS - 8" NOMINAL			
11.25°	22.5°	45°	90°
4'	9'	17'	41'

VERTICAL OFFSET					
45		22.5		11.25	
HIGH	LOW	HIGH	LOW	HIGH	LOW
48'	12'	23'	6'	12'	3'

TEES - 1' LENGTH ALONG RUN			
6" RUN x 6" BRANCH	8" RUN x 6" BRANCH	8" RUN x 8" BRANCH	12" RUN X 8" BRANCH
54'	51'	74'	69'

DEAD END	
6"	8"
62'	82'

REDUCERS	
8" x 6"	12" x 8"
35'	63'

RESTRAINED JOINT REQUIREMENTS
NO SCALE

NOTE:
ALL JOINTS WITHIN THE ABOVE DISTANCES SHALL BE RESTORED IN ACCORDANCE WITH SPECIFICATIONS

COMMONWEALTH ENGINEERS, INC.
A wealth of resources to make a difference.
https://commonwealthengineers.com/

BENJAMIN H. ADAMS
REGISTERED No. 19700508 STATE OF INDIANA PROFESSIONAL ENGINEER
Signature Date 6/6/2025

CITY OF GARRETT, IN
DEKALB COUNTY

SR 8-CR 15
SANITARY SEWER AND WATER MAIN EXTENSION

Indiana811 Know what's below. Call before you dig.
Know what's below. Call before you dig. 1-800-382-5544 (1TS THE LAW)

No.	Submittal / Revision	By	Date

Designed By:	Drawn By:	Checked By:
BA/BW	CH	NS
Issue Date: 6/2025	Project No: S24214	Scale: AS SHOWN

MISCELLANIOUS DETAILS

Drawing No: MD2
Sheet: 15 OF 26

File: Z:\SHARED\IN CLIENTS A-L\GARRETT\S24214 - SR 8 -CR 15 HOLLMAN PROJECT\06 CAD\A CURRENT FILES\1 DRAWINGS\06 - S24214 - MISC DETAILS.DWG
Saved: 6/25/2025 1:58:17 PM Plotted: 6/30/2025 9:05:10 AM Current User: Craig Higbie LastSavedBy: chigbie

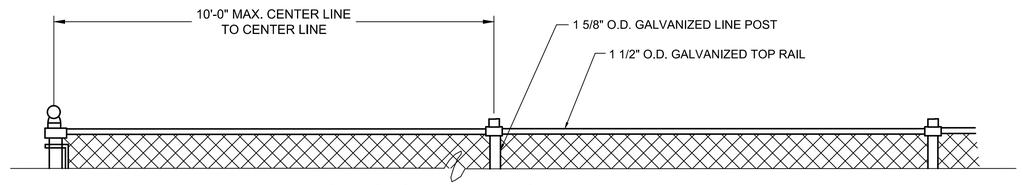

LIFT STATION CHAIN LINK FENCE DETAIL
NO SCALE

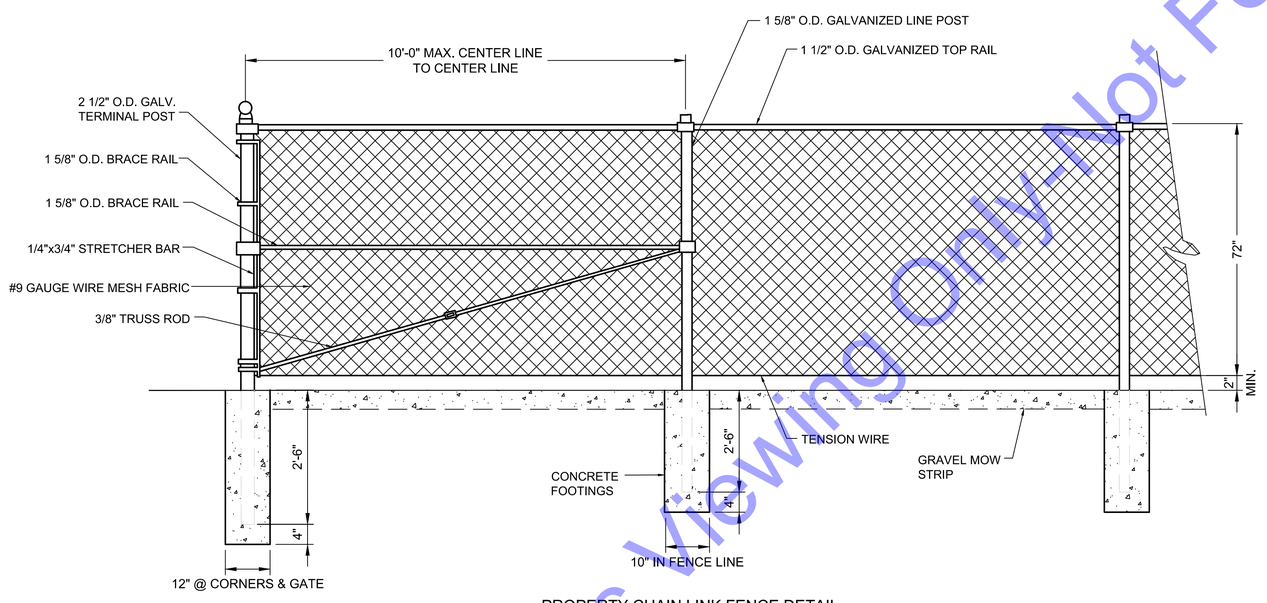

PROPERTY CHAIN LINK FENCE DETAIL
NO SCALE

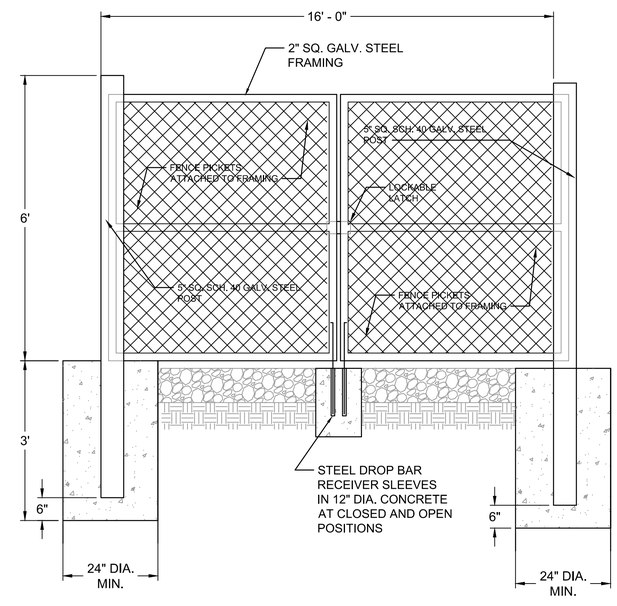

PROPERTY 16' DOUBLE SWING GATE DETAIL
NO SCALE

COMMONWEALTH ENGINEERS, INC.
A wealth of resources to make a common goal.
https://commonwealthengineers.com/

BENJAMIN H. ADAMS
REGISTERED No. 19700508 STATE OF INDIANA
PROFESSIONAL ENGINEER
Signature
6/6/2025
Date

CITY OF GARRETT, IN
DEKALB COUNTY

SR 8-CR 15
SANITARY SEWER AND WATER MAIN
EXTENSION

Indiana811
Know what's below. Call before you dig.
Know what's below. 811 before you dig.
1-800-382-5544
(ITS THE LAW)

No.	Submittal / Revision	By	Date

Designed By:	Drawn By:	Checked By:
BA/BW	CH	NS
Issue Date: 6/2025	Project No: S24214	Scale: AS SHOWN

MISCELLANEOUS
DETAILS

Drawing No:
MD3
Sheet: 16 OF 26

File: Z:\SHARED\IN CLIENTS A-L\GARRETT\J24214 - SR 8 -CR 15 HOLLMAN PROJECT\06 CAD\A CURRENT FILES\1 DRAWINGS\06 - J24214 - MISC DETAILS.DWG
Saved: 6/25/2025 1:58:17 PM Plotted: 6/30/2025 9:05:11 AM Current User: Craig Higbie LastSavedBy: chigbie

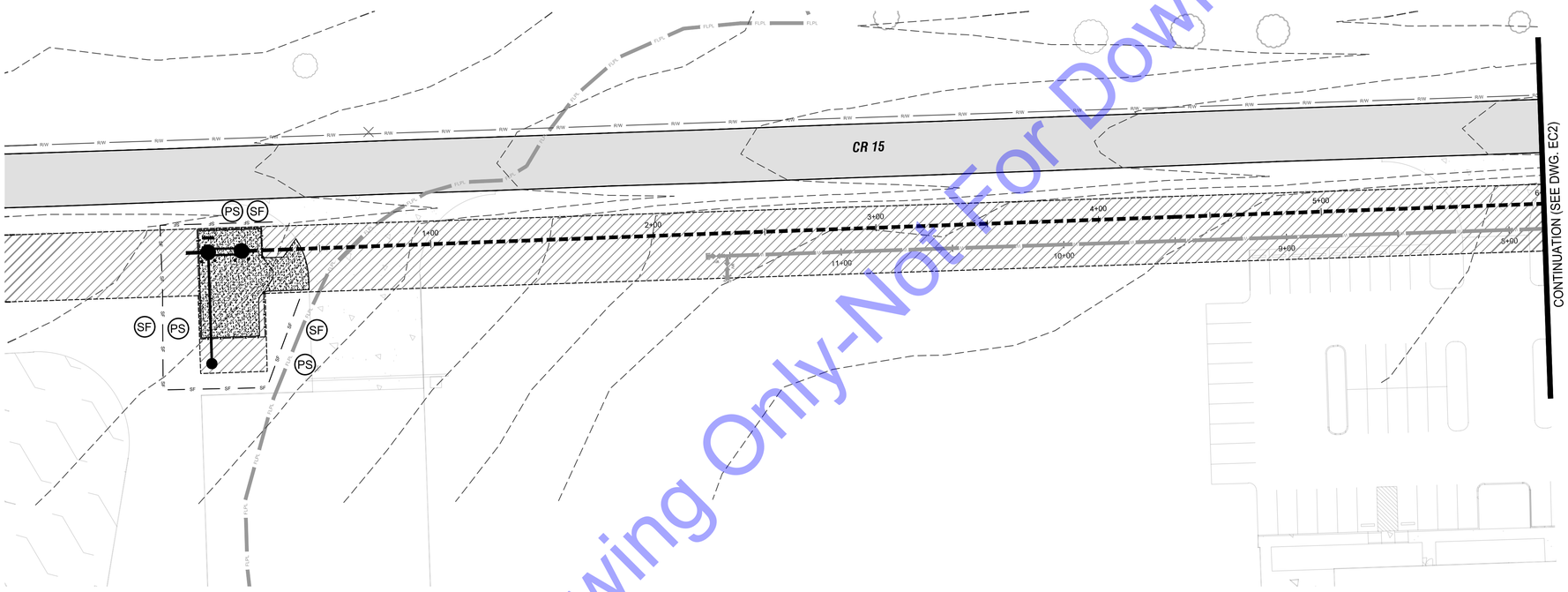

EROSION CONTROL PLAN

SCALE: 1"=40'-0"

SCALE: 1"=40'

40' 0 40'

EROSION CONTROL LEGEND

— SF —	SF	SILT FENCE
	EB	EROSION CONTROL BLANKET
	IP	INLET PROTECTION
	PS	PERMANENT SEEDING/MULCHING

COMMONWEALTH ENGINEERS, INC.
A wealth of resources to make a difference.
https://commonwealthengineers.com/

BENJAMIN H. ADAMS
REGISTERED No. 19700508 STATE OF INDIANA
PROFESSIONAL ENGINEER

Signature Date 6/6/2025

CITY OF GARRETT, IN
DEKALB COUNTY

SR 8-CR 15
SANITARY SEWER AND WATER MAIN EXTENSION

Indiana 811 Know what's below. Call before you dig.
Know what's below. 811 before you dig.
1-800-382-5544
(ITS THE LAW)

No.	Submittal Revision	By	Date

Designed By:	Drawn By:	Checked By:
BA/BW	CH	NS
Issue Date: 6/2025	Project No: S24214	Scale: AS SHOWN

EROSION CONTROL PLAN

Drawing No:
EC1

Sheet: 17 OF 26

File: Z:\SHARED\IN CLIENTS A-L\GARRETT\J24214 - SR 8 -CR 15 HOLLMAN PROJECT\06 CAD\A CURRENT FILES\1 DRAWINGS\07 - J24214 - EROSION CONTROL.DWG
Saved: 6/19/2025 1:43:06 PM Plotted: 6/30/2025 9:05:52 AM Current User: Craig Higbie LastSavedBy: chigbie

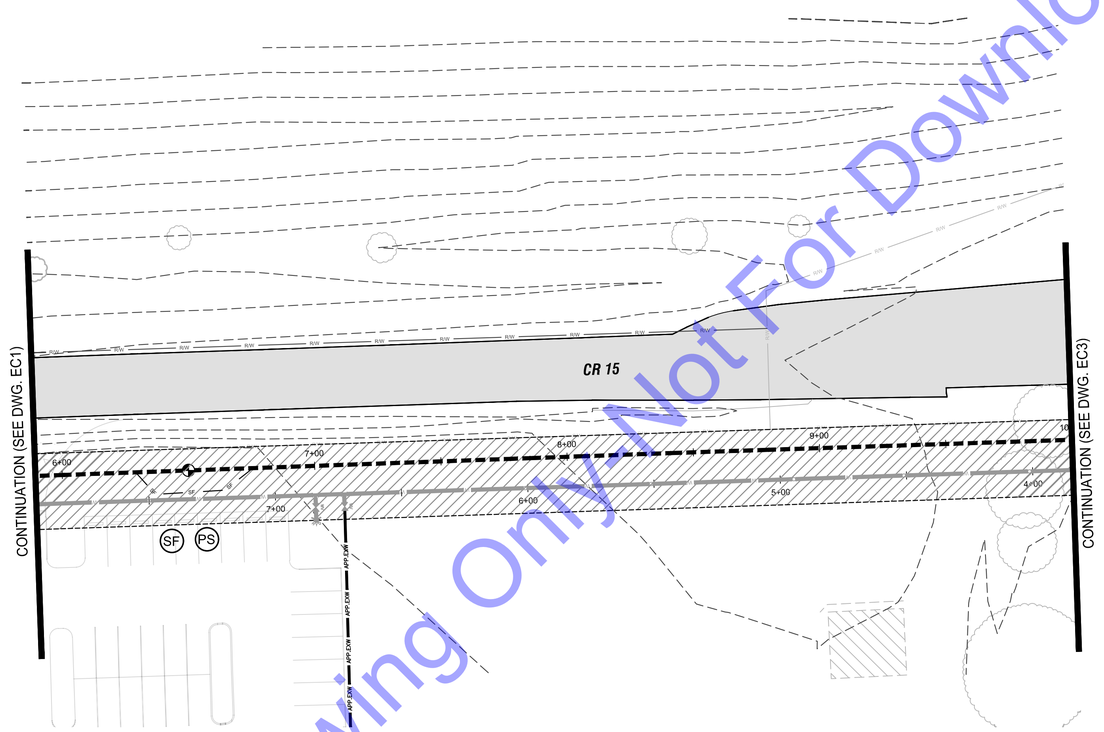

EROSION CONTROL PLAN

SCALE: 1"=40'-0"

SCALE: 1"=40'

40' 0 40'

EROSION CONTROL LEGEND

— SF —	SF	SILT FENCE
	EB	EROSION CONTROL BLANKET
	IP	INLET PROTECTION
	PS	PERMANENT SEEDING/MULCHING

COMMONWEALTH ENGINEERS, INC.
A wealth of resources to make a common goal.
https://commonwealthengineers.com/

BENJAMIN H. ADAMS
REGISTERED
No. 19700508
STATE OF INDIANA
PROFESSIONAL ENGINEER

Signature Date 6/6/2025

CITY OF GARRETT, IN
DEKALB COUNTY

SR 8-CR 15
SANITARY SEWER AND WATER MAIN EXTENSION

Indiana 811 Know what's below. Call before you dig.
Know what's below. 811 before you dig.
1-800-382-5544 (ITS THE LAW)

No.	Submittal Revision	By	Date

Designed By:	Drawn By:	Checked By:
BA/BW	CH	NS
Issue Date: 6/2025	Project No: S24214	Scale: AS SHOWN

EROSION CONTROL PLAN

Drawing No:
EC2

Sheet: 18 OF 26

File: Z:\SHARED\IN CLIENTS A-L\GARRETT\J24214 - SR 8 -CR 15 HOLLMAN PROJECT\06 CAD\A CURRENT FILES\1 DRAWINGS\07 - J24214 - EROSION CONTROL.DWG
Saved: 6/19/2025 1:43:06 PM Plotted: 6/20/2025 9:05:58 AM Current User: Craig Higbie LastSavedBy: chigbie

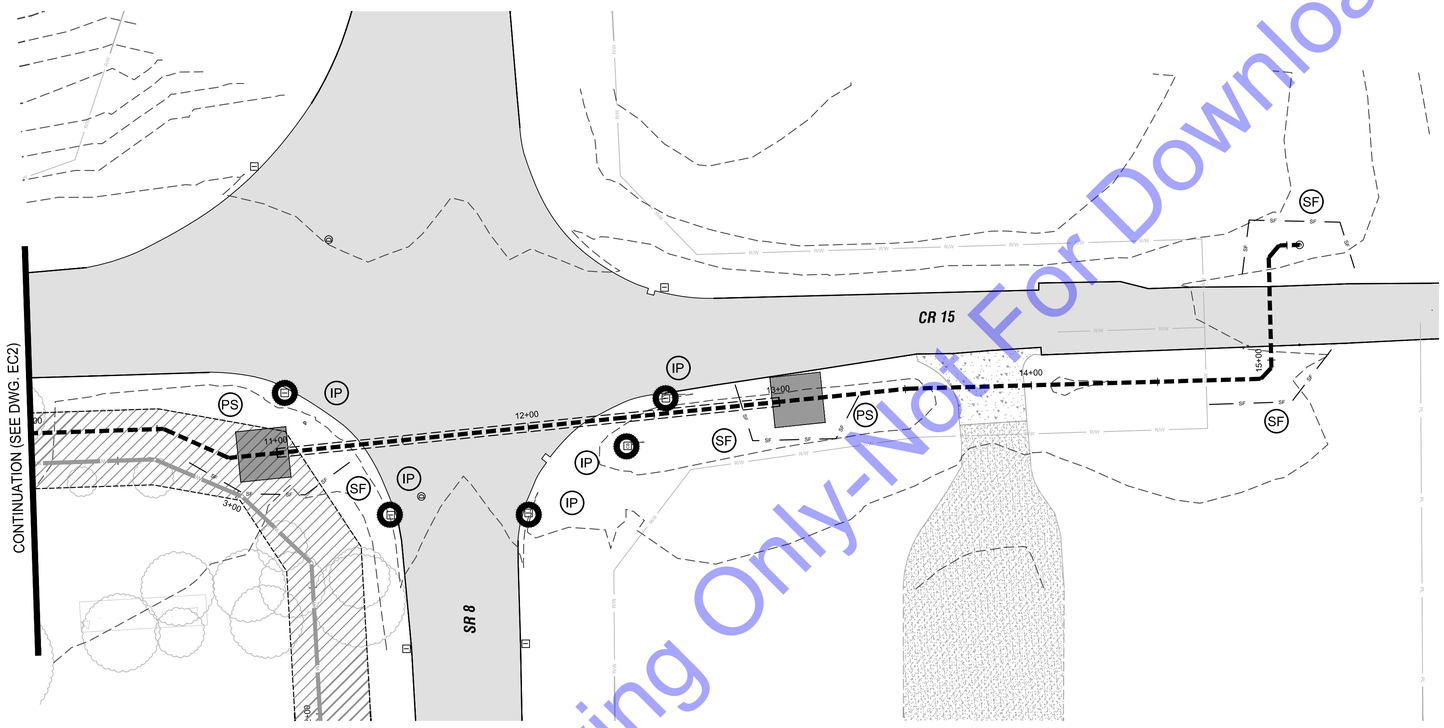

EROSION CONTROL PLAN

SCALE: 1"=40'-0"

SCALE: 1"=40'

40' 0 40'

EROSION CONTROL LEGEND

— SF —	SF	SILT FENCE
	EB	EROSION CONTROL BLANKET
	IP	INLET PROTECTION
	PS	PERMANENT SEEDING/MULCHING

COMMONWEALTH ENGINEERS, INC.
A wealth of resources to make a difference.
https://commonwealthengineers.com/

BENJAMIN H. ADAMS
REGISTERED
No. 19700508
STATE OF INDIANA
PROFESSIONAL ENGINEER

Signature Date 6/6/2025

CITY OF GARRETT, IN
DEKALB COUNTY

SR 8-CR 15
SANITARY SEWER AND WATER MAIN EXTENSION

Indiana811 Know what's below. Call before you dig.
Know what's below. 811 before you dig.
1-800-382-5544
(ITS THE LAW)

No.	Submittal / Revision	By	Date

Designed By:	Drawn By:	Checked By:
BA/BW	CH	NS
Issue Date: 6/2025	Project No: S24214	Scale: AS SHOWN

EROSION CONTROL PLAN

Drawing No: EC3

Sheet: 19 OF 26

File: Z:\SHARED\IN CLIENTS A-L\GARRETT\J24214 - SR 8 -CR 15 HOLLMAN PROJECT\06 CAD\A CURRENT FILES\ DRAWINGS\07 - J24214 - EROSION CONTROL.DWG
Saved: 6/19/2025 1:43:06 PM Plotted: 6/30/2025 9:06:04 AM Current User: Craig Higbie LastSavedBy: chigbie

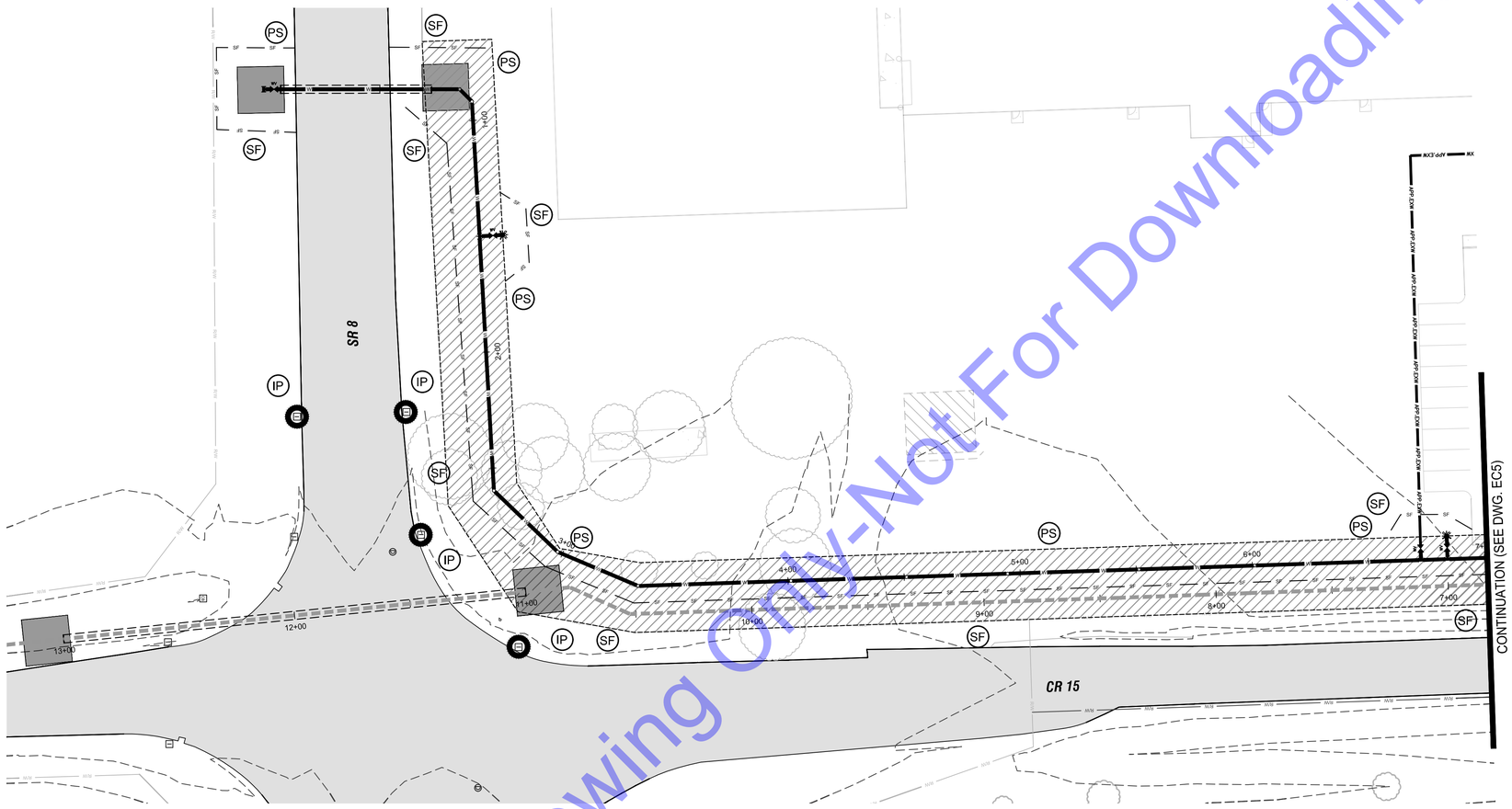

EROSION CONTROL PLAN

SCALE: 1"=40'-0"

SCALE: 1"=40'

40' 0 40'

EROSION CONTROL LEGEND

— SF —	SF	SILT FENCE
	EB	EROSION CONTROL BLANKET
	IP	INLET PROTECTION
	PS	PERMANENT SEEDING/MULCHING

COMMONWEALTH ENGINEERS, INC.
A wealth of resources to make a common goal.
https://commonwealthengineers.com/

BENJAMIN H. ADAMS
REGISTERED No. 19700508 STATE OF INDIANA
PROFESSIONAL ENGINEER

Signature Date 6/6/2025

CITY OF GARRETT, IN
DEKALB COUNTY

SR 8-CR 15
SANITARY SEWER AND WATER MAIN
EXTENSION

Indiana 811
Know what's below. Call before you dig.
Know what's below. 811 before you dig.
1-800-382-5544
(ITS THE LAW)

No.	Submittal / Revision	By	Date

Designed By:	Drawn By:	Checked By:
BA/BW	CH	NS
Issue Date: 6/2025	Project No: S24214	Scale: AS SHOWN

EROSION CONTROL PLAN

Drawing No:
EC4

Sheet: 20 OF 26

File: Z:\SHARED\IN CLIENTS A-L\GARRETT\J24214 - SR 8 -CR 15 HOLLMAN PROJECT\06 CAD\A CURRENT FILES\1 DRAWINGS\07 - J24214 - EROSION CONTROL.DWG
Saved: 6/19/2025 1:43:06 PM Plotted: 6/20/2025 9:06:09 AM Current User: Craig Higbie LastSavedBy: chigbie

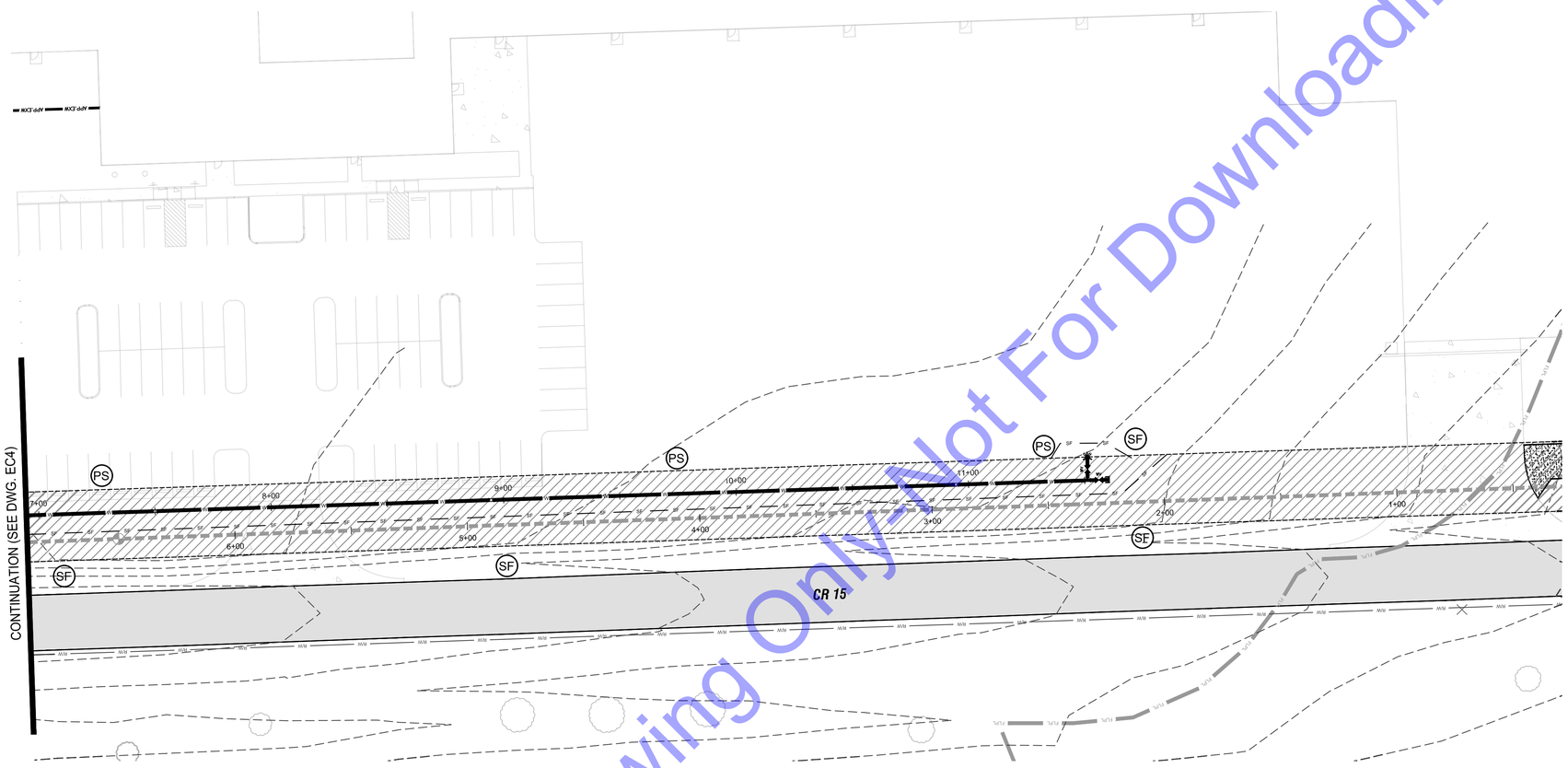

EROSION CONTROL PLAN

SCALE: 1"=40'-0"

SCALE: 1"=40'

40' 0 40'

EROSION CONTROL LEGEND

— SF —	SF	SILT FENCE
	EB	EROSION CONTROL BLANKET
	IP	INLET PROTECTION
	PS	PERMANENT SEEDING/MULCHING

COMMONWEALTH ENGINEERS, INC.
A wealth of resources to make a difference.
https://commonwealthengineers.com/

BENJAMIN H. ADAMS
REGISTERED
No. 19700508
STATE OF INDIANA
PROFESSIONAL ENGINEER

Signature Date 6/6/2025

CITY OF GARRETT, IN
DEKALB COUNTY

SR 8-CR 15
SANITARY SEWER AND WATER MAIN EXTENSION

Indiana 811 Know what's below. Call before you dig.
Know what's below. 811 before you dig.
1-800-382-5544
(ITS THE LAW)

No.	Submittal / Revision	By	Date

Designed By:	Drawn By:	Checked By:
BA/BW	CH	NS
Issue Date: 6/2025	Project No: S24214	Scale: AS SHOWN

EROSION CONTROL PLAN

Drawing No: EC5

Sheet: 21 OF 26

File: Z:\SHARED\IN CLIENTS A-L\GARRETT\J24214 - SR 8 -CR 15 HOLLMAN PROJECT\06 CAD\A CURRENT FILES\1 DRAWINGS\07 - J24214 - EROSION CONTROL.DWG
Saved: 6/19/2025 1:43:06 PM Plotted: 6/30/2025 9:06:15 AM Current User: Craig Higbie LastSavedBy: chigbie

PROJECT NOTIFICATION

A. CONTRACTOR SHALL PROVIDE CONSTRUCTION SIGN AND NOTICE AT A PUBLICLY ACCESSIBLE LOCATION NEAR THE PROJECT THAT DISPLAYS THE FOLLOWING INFORMATION:

1. A COPY OF THE NOI LETTER AND THE NPDES NUMBER.
2. LOCATION OF THE CONSTRUCTION PLANS.
3. NAME, COMPANY NAME, TELEPHONE NUMBER, EMAIL ADDRESS (IF APPLICABLE) AND ADDRESS OF THE PROJECT SITE OWNER.
4. NAME OF THE CONSTRUCTION PROJECT AND AN ADDRESS OR GENERAL LOCATION OF THE PROJECT.
5. NAME OF THE RECEIVING WATER(S).
6. CONTACT INFORMATION (PHONE AND EMAIL) OF CONTRACTOR WHERE QUESTIONS MAY BE DIRECTED.
7. DATE THE NOTICE WAS POSTED.
8. BE LEGIBLE AND ON AN 8 ½" X 11" SHEET AT A MINIMUM.
9. CONTRACTOR SHALL BE RESPONSIBLE FOR CONTACTING THE LOCAL SWCD, MS4 OR LOCAL JURISDICTION, PRIOR TO START OF CONSTRUCTION.

PROJECT DOCUMENTATION

B. CONTRACTOR SHALL MAINTAIN A PROJECT MANAGEMENT LOG THAT CONTAINS:

1. LOCATION OF EACH ACTIVITY RELATED TO ALL OFF-SITE BORROW SITES, DISPOSAL AREAS, AND STAGING AREAS THAT ARE OFF-SITE AND MEET CRITERIA NOTED IN CONSTRUCTION STORMWATER GENERAL PERMIT.
2. INFORMATION RELATED TO ALL PROJECT ACTIVITIES INCLUDING, BUT NOT LIMITED TO:
   a. SELF-MONITORING PROGRAM (SMP) REPORTS
   b. SMP REPORTS MUST BE COMPLETED BY A TRAINED INDIVIDUAL AS DESCRIBED IN THE CONSTRUCTION STORMWATER GENERAL PERMIT. CONTRACTOR SHALL RETAIN A COPY OF THE RESUME OF THE TRAINED INDIVIDUAL COMPLETING THE REPORTS WITHIN THE PROJECT MANAGEMENT LOG.
3. REGULATORY INSPECTIONS
4. RESPONSES TO A COMPLIANCE ACTION OR ENFORCEMENT ACTION.
5. RECORDS SHOWING THE DATES OF ALL STORMWATER POLLUTION PREVENTION PLAN (SWP3) MODIFICATIONS. THE RECORDS MUST INCLUDE THE NAME OF THE PERSON AUTHORIZING EACH CHANGE AND SEND A SUMMARY OF ALL CHANGES.

C. CONTRACTOR SHALL ENSURE SWP3 AND ALL SUPPORTING DOCUMENTATION ASSOCIATED WITH THE SMP AND PROJECT MANAGEMENT LOG ARE ACCESSIBLE AT THE PROJECT SITE OFFICE OR IN THE POSSESSION OF ON-SITE INDIVIDUALS WITH RESPONSIBILITY FOR THE OVERALL PROJECT MANAGEMENT OR ASSOCIATED WITH THE MANAGEMENT AND OPERATIONS OF CONSTRUCTION ACTIVITIES. ALL INFORMATION MUST BE PROVIDED TO IDEM OR THE INSPECTING AUTHORITY WITHIN 48 HOURS OF A REQUEST.

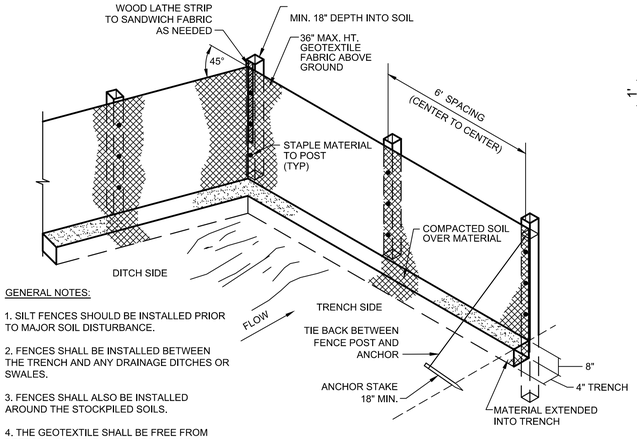

GENERAL NOTES:

1. SILT FENCES SHOULD BE INSTALLED PRIOR TO MAJOR SOIL DISTURBANCE.

2. FENCES SHALL BE INSTALLED BETWEEN THE TRENCH AND ANY DRAINAGE DITCHES OR SWALES.

3. FENCES SHALL ALSO BE INSTALLED AROUND THE STOCKPILED SOILS.

4. THE GEOTEXTILE SHALL BE FREE FROM DEFECTS, TEARS, PUNCTURES, FLAWS, DETERIORATION OR DAMAGE INCURRED DURING MANUFACTURE, TRANSPORTATION, STORAGE, OR INSTALLATION.

5. TIE BACKS SHALL BE PLACED AS REQUIRED.

SILT FENCE
NO SCALE

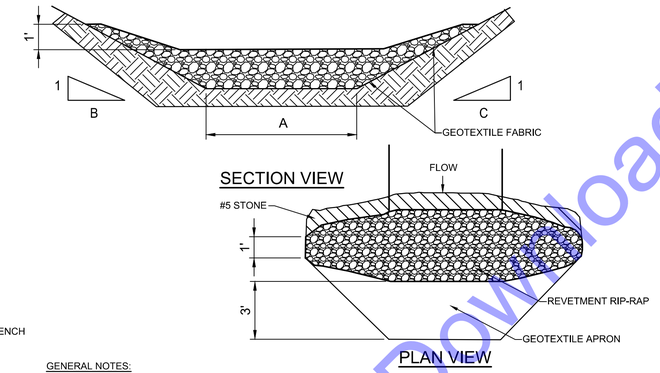

GENERAL NOTES:

1. TO BE INSTALLED DOWNSTREAM OF ALL EXCAVATIONS ACROSS DITCHES.

2. AFTER COMPLETION OF CONTRACT, OR AS REQUESTED BY OWNER, THE CONTRACTOR SHALL REMOVE ALL TEMPORARY EROSION CONTROL ITEMS, REMOVE ALL ACCUMULATED DEPOSITS AND, AS REQUIRED, SEED AND MULCH OR SOD AS REQUIRED TO ESTABLISH AREA TO CONDITION PRIOR TO CONSTRUCTION.

3. CONTRACTOR SHALL BE RESPONSIBLE TO COMPLY WITH ALL ASPECTS OF "327 IAC 15-5" AND THE INDIANA STORM WATER QUALITY MANUAL.

TEMPORARY RIP-RAP CHECK DAM DETAIL
NO SCALE

A. RESIDENTIAL/COMMERCIAL SEED MIXTURE

1. 35 PARTS KENTUCKY BLUEGRASS
2. 30 PARTS PERENNIAL RYE
3. 30 PARTS KENTUCKY FESCUE

B. MULCH

1. GOOD QUALITY DRY STORM
2. WOOD CELTULOSE OR CANE FIBER
3. MANUFACTURED EROSION CONTROL BRACKET NORTH AMERICA GREEN S-75 OR EQUAL

C. FERTILIZER AND LIME

1. AGRICULTURAL HYDRATED LIME
2. FERTILIZER 10-20-10

D. ROADSIDE BANK STABILIZATION MIXTURE (INDOT)

1. SEED MIXTURE CV WITH SUPPLEMENTAL
2. COLOR MIX PER INDOT SEED AND SODDING SPECIFICATION (LATEST EDITION)

NOTE: SEE DETAILED SPECIFICATION SECTION 12 - FINAL GRADING AND SEEDING FOR INSTALLATION REQUIREMENTS.

FINAL SEEDING AND GRADING

MAINTENANCE:
1. INSPECT DAILY, AND AFTER EACH STORM EVENT OR HEAVY USE.
2. RESHAPE AS NEEDED FOR DRAINAGE AND RUNOFF CONTROL.
3. TOPDRESS WITH CLEAN STONE AS REQUIRED. MAINTAIN MINIMUM DEPTH THROUGHOUT CONSTRUCTION.
4. IMMEDIATELY REMOVE MUD AND SEDIMENT TRACKED OR WASHED ONTO PUBLIC ROADS BY SWEEPING OR BRUSHING. (DO NOT FLUSH AREA WITH WATER UNLESS WATER IS CONVEYED TO SEDIMENT TRAP.)
5. REPAIR ANY BROKEN PAVEMENT IMMEDIATELY.

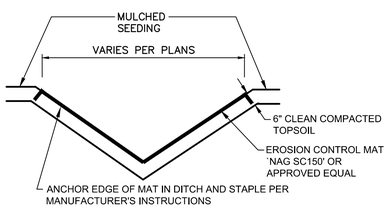

DITCH/SWALE RESTORATION DETAIL
N.T.S.

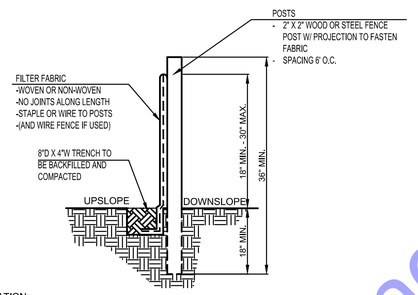

INSTALLATION:
1. THE BOTTOM 1' OF THE FENCE SHALL BE BURIED IN THE TRENCH ON THE UPSLOPE SIDE.
2. FENCE SHALL BE INSTALLED ALONG LEVEL GRADES, NOT ACROSS FLOW CHANNELS.
3. IF OPTIONAL SUPPORT WIRE FENCE IS USED, POST SPACING MAY BE EXTENDED TO 8' O.C.

MAINTENANCE:
1. INSPECT SILT FENCE PERIODICALLY (WEEKLY) AND AFTER EACH STORM EVENT.
2. IF FABRIC IS TORN OR DAMAGED OR IN ANY WAY BECOMES INEFFECTIVE, REPLACE THE AFFECTED PORTION IMMEDIATELY.
3. REMOVE DEPOSITED SEDIMENT WHEN IT REACHES HALF THE HEIGHT OF THE FENCE, OR IT IS CAUSING THE FABRIC TO BULGE.
4. TAKE CARE NOT TO UNDERMINE THE FENCE DURING SEDIMENT REMOVAL.
5. AFTER THE CONTRIBUTING AREA HAS BEEN STABILIZED, REMOVE THE FENCE AND REMAINING SEDIMENT, BRING THE DISTURBED AREA TO GRADE, AND STABILIZE.

SILT FENCE SECTION
NO SCALE

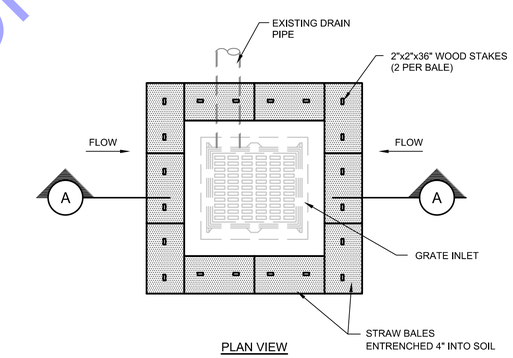

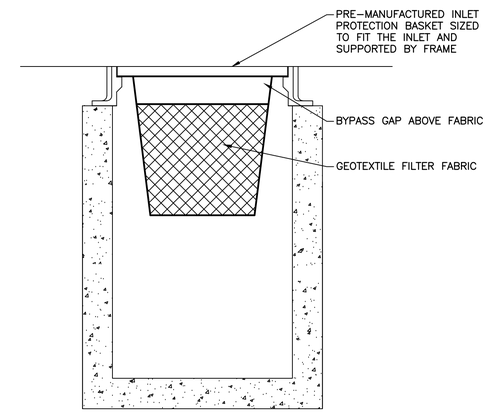

INSERT (BASKET) INLET PROTECTION
N.T.S.

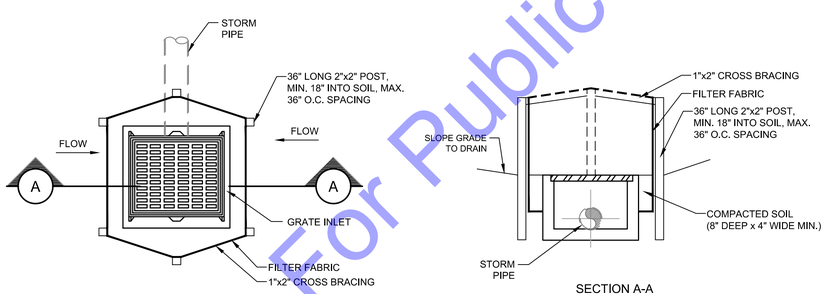

STORM INLET WITH SILT FENCE EROSION DETAIL

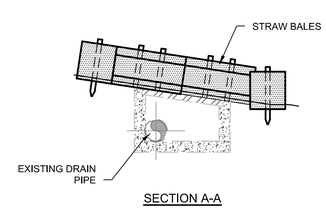

STORM INLET IN TURFED AREAS PROTECTION DETAILS
NO SCALE

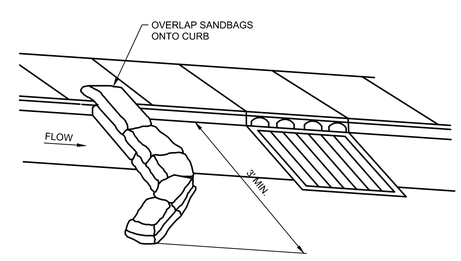

IN PAVED AREAS

SANDBAG DIVERSION AT CURB INLET
NO SCALE

COMMONWEALTH ENGINEERS, INC.
A wealth of resources to make a difference.
https://commonwealthengineers.com/

BENJAMIN H. ADAMS
REGISTERED No. 19700508 STATE OF INDIANA PROFESSIONAL ENGINEER
Signature — Date 6/6/2025

CITY OF GARRETT, IN
DEKALB COUNTY

SR 8-CR 15
SANITARY SEWER AND WATER MAIN EXTENSION

Indiana811 Know what's below. Call before you dig.
Know what's below. 811 before you dig.
1-800-382-5544 (ITS THE LAW)

No.	Submittal / Revision	By	Date

Designed By:	Drawn By:	Checked By:
BA/BW	CH	NS
Issue Date: 6/2025	Project No: S24214	Scale: AS SHOWN

EROSION CONTROL DETAILS

Drawing No: EC6

Sheet: 22 OF 26

File: Z:\SHARED\IN CLIENTS A-L\GARRETT\J24214 - SR 8 -CR 15 HOLLMAN PROJECT\06 CAD\A CURRENT FILES\ DRAWINGS\07 - J24214 - EROSION CONTROL.DWG
Saved: 6/19/2025 1:43:06 PM Plotted: 6/30/2025 9:06:16 AM Current User: Craig Higbie LastSavedBy: chgbie

PROCESS AND INSTRUMENTATION DIAGRAM LEGEND

INSTRUMENT TAG IDENTIFICATION

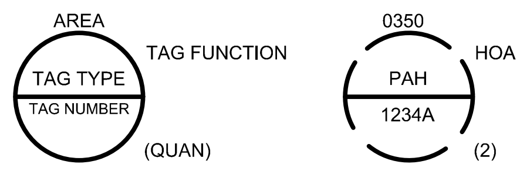

COMPONENT DESIGNATOR

AREA 035D: BUILDING OR PROCESS AREA NUMBER

TAG TYPE P: FIRST LETTER, SEE ISA TABLE BELOW
AH: SUCCEEDING LETTERS, SEE ISA TABLE BELOW

TAG NUMBER 12: P&ID NUMBER
3: LOOP NUMBER
4: EQUIPMENT NUMBER
A: DEVICE LETTER IF MULTIPLE DEVICES

TAG FUNCTION HOA: TAG FUNCTION ABBREVIATION, SEE LISTING AT RIGHT

(QUANTITY) (2): TOTAL NUMBER OF DEVICES WHERE MORE THAN ONE DEVICE IS REQUIRED. DEVICE NUMBERS ARE SEQUENTIAL BEGINNING WITH THE TAG NUMBER SHOWN. IF QUANTITY IS NOT SHOWN, THEN ONE DEVICE ONLY IS REQUIRED.

COMPONENT DESIGNATOR SEE LISTING AT RIGHT

PLC POINT TYPE

ANALOG INPUT	▲
ANALOG OUTPUT	▼
DISCRETE INPUT	△
DISCRETE OUTPUT	▽
NETWORK CONNECTION	⧗

TAG FUNCTION ABBREVIATIONS

ALT	ALTERNATE
C	CLOSED(C)
CM	COMPUTER-MANUAL
DIFF	DIFFERENCE OR DIFFERENTIAL
DO	DISSOLVED OXYGEN
F	FAIL
F(X)	CHARACTERIZED
FOR	FOWARD-STOP(OFF)-REVERSE(MAINTAINED CONTACT)
FSR	FOWARD-STOP-REVERSE(MOMENTARY CONTACT)
HOA	HAND-OFF-AUTOMATIC(MAINTAINED CONTACT)
HOR	HAND-OFF-REMOTE(MAINTAINED CONTACT)
II	CURRENT TO CURRENT
IP	CURRENT TO PNEUMATIC
LL	LEAD-LAG(MAINTAINED CONTACT)
LOE	LOSS OF ECHO(ULTRASONIC SENSOR FAILURE)
LOR	LOCAL-OFF-REMOTE(MAINTAINED CONTACT)
LOS	LOCKOUT STOP(LOCKABLE IN "STOP" POSITION MOMENTARY CONTACT)
L/R	LOCAL/REMOTE(MAINTAINED CONTACT)
MA	MANUAL-AUTOMATIC(MAINTAINED CONTACT)
MOA	MANUAL-OFF-AUTOMATIC(MAINTAINED CONTACT)
O	OPEN
OA	OFF-AUTOMATIC
OCA	OPEN-CLOSE-AUTOMATIC(MAINTAINED CONTACT)
OC	OPEN-CLOSE(D)(MAINTAINED CONTACT)
OSC	OPEN-STOP-CLOSE(MOMENTARY CONTACT SPRING RETURN TO CENTER POSITION)
00	ON-OFF(MAINTAINED CONTACT)
OOA	ON-OFF-AUTOMATIC(MAINTAINED CONTACT)
OOR	ON-OFF-REMOTE(MAINTAINED CONTACT)
R	RUN
SBL	SLUDGE BLANKET INTERFACE LEVEL
SP	SPEED POT
SQRT	SQUARE ROOT
SS	START-STOP
SSA	START-STOP-AUTOMATIC
SSL	START-STOP-LOCK (LOCKABLE IN "STOP" POSITION. MOMENTARY CONTACT)
SUM	SUMMMATION
VIB	VIBRATION
X	MULTIPLY
FWD	FOWARD
REV	REVERSE
F/R	FOWARD/REVERSE(MOTOR STARTER COILS)
ESTP	ESTOP(EMERGENCY STOP)
SPD	(SPEED POT)
SUSP	SUSPEND
ALRT	ALERT
RSET	RESET
STRT	START

TAG SYMBOLS

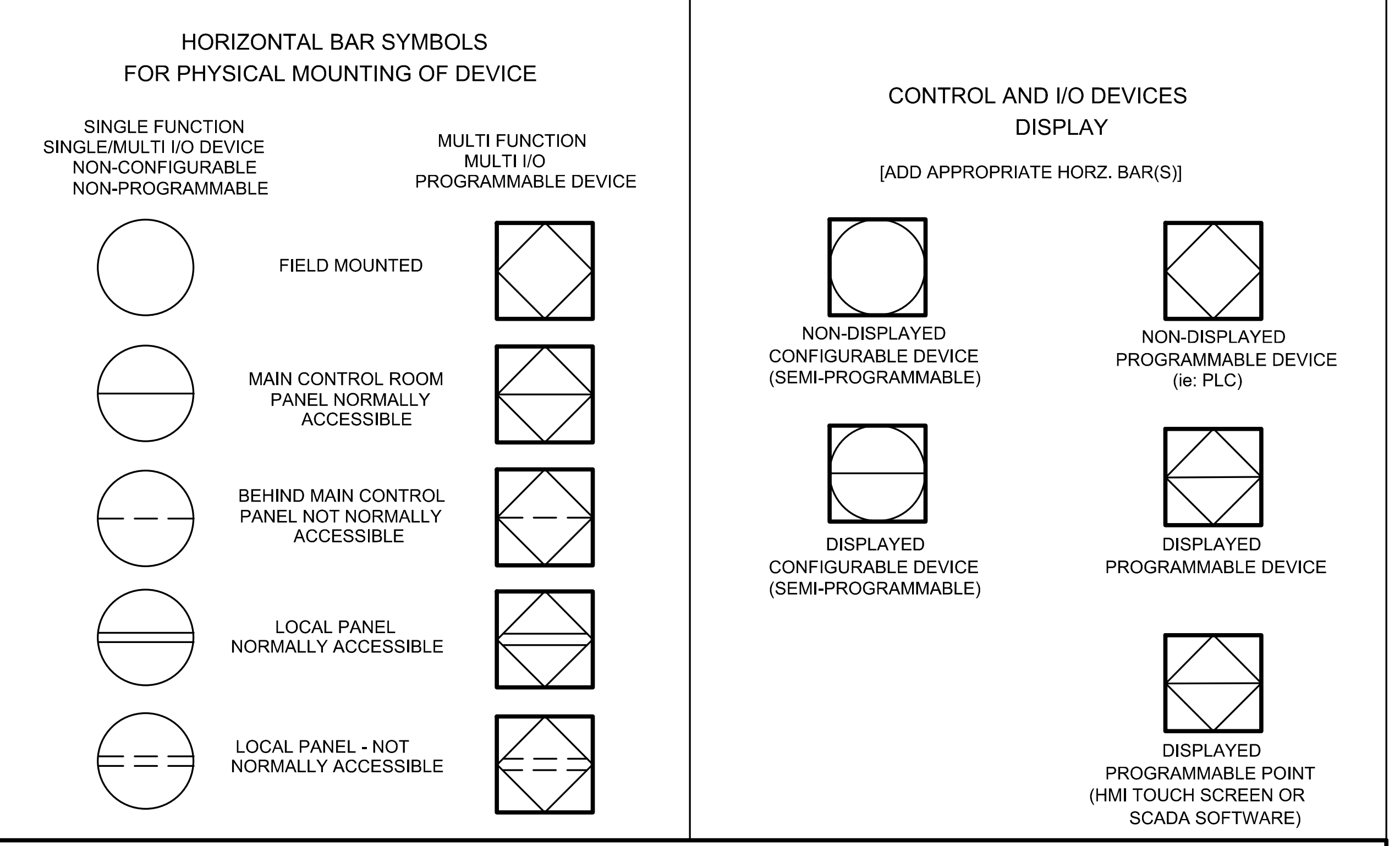

INSTRUMENT SOCIETY OF AMERICA TABLE

LETTER	FIRST LETTER(S)		SUCCEEDING LETTER(S)		
	PROCESS OR INITIATING VARIABLE	MODIFIER	READOUT OR PASSIVE FUNCTION	OUTPUT FUNCTION	MODIFIER
A	ANALYSIS		ALARM(W. LOGGING)	ANNUNCIATE	
B	BURNER COMBUSTION		USERS CHOICE(*)	USERS CHOICE(*)	USERS CHOICE(*)
C	USERS CHOICE(*)			CONTROL	CLOSE
D	USERS CHOICE(*)	DIFFERENTIAL			
E	VOLTAGE		PRIMARY ELEMENT		
F	FLOW RATE	RATIO			FEEDBACK
G	USERS CHOICE(*)		GLASS		
H	HAND (MANUAL)				HIGH
I	CURRENT		INDICATE		
J	POWER	SCAN			
K	TIME OR SCHEDULE	TIME RATE OF CHANGE	KEYPAD(DATA ENTRY)	CONTROL STATION	
L	LEVEL		LIGHT(PILOT)		LOW
M	MOTOR	MOMENTARY			MONITORING
N	USERS CHOICE(*)		USERS CHOICE(*)	USERS CHOICE(*)	USERS CHOICE(*)
O	USERS CHOICE(*)		ORIFICE		
P	PRESSURE OR VACUUM		POINT TEST CONNECTION		
Q	QUANTITY	INTEGRATE			
R	RADIATION		RECORD, TREND, LOG		
S	SPEED OR FREQUENCY	SAFETY		SWITCH	
T	TEMPERATURE			TRANSIT	
U	UNIVERSAL/MULTIVARIABLE(*)		MULTIFUNCTION(*)	MULTIFUNCTION(*)	MULTIFUNCTION(*)
V	VIBRATION		VALUE	VALVE	
W	WEIGHT, FORCE, TORQUE		WELL	W	
X	UNCLASSIFIED(*)	X AXIS	UNCLASSIFIED(*)	UNCLASSIFIED(*)	UNCLASSIFIED(*)
Y	EVENT, STATE	Y AXIS		RELAY OR COMPUTE(*)	
Z	POSITION, DIMENSION	Z AXIS		DRIVE, ACTUATE OR UNCLASSIFIED FINAL CONTROL ELEMENT	

(*) WHEN USED, EXPLANATION IS SHOWN ADJACENT TO INSTRUMENT SYMBOL

SPECIAL CASES:
ETM - ELAPSED TIME METER
JBX - JUNCTION BOX
NDX - INDEX #
MS - MOTOR STARTER
MOR - MOTOR OVERLOAD RELAY
MPR - MOTOR PROTECTION RELAY

CONDUIT NOTES

PVC SCHEDULE 40 BELOW GRADE.

RIGID ALUMINUM OR PVC COATED RGS CONDUIT ABOVE GRADE OUTDOORS.

RIGID ALUMINUM OR PVC COATED RGS CONDUIT IN CLASSIFIED AND CORROSIVE SPACES.

NO CONDUIT SHALL BE INSTALLED ON TOP OF A DECK, ON A WALKWAY, OR IN AN AREA THAT MAY POSE A TRIP HAZARD. NO CONDUIT SHALL BE INSTALLED ABOVE A DECK, ABOVE A WALKWAY, OR IN AN AREA THAT IS COMMONLY TRAVELED. ALL CONDUIT IN SUCH AREAS SHALL BE COORDINATED WITH THE OWNER/ENGINEER AND SHALL BE INSTALLED BELOW GRADE OR IN THE CONCRETE DECKING OR PAD. CONDUIT INSTALLED IN CONCRETE DECKING OR PAD SHALL BE AVOIDED WHEN POSSIBLE. IF CONDUIT IS TO BE ROUTED IN A STRUCTURAL CONCRETE DECK, PAD, WALL, ETC. IT SHALL BE COORDINATED AND APPROVED BY THE ENGINEER PRIOR TO INSTALLATION. CONDUIT INSTALLED IN CONCRETE CAN IMPACT THE STRUCTURAL INTEGRITY OF CONCRETE. IT IS THE CONTRACTORS RESPONSIBILITY TO CONFORM TO ANY REQUIREMENTS REQUIRED OF THE STRUCTURAL ENGINEER TO ACCOMMODATE THE INTEGRITY OF THE INSTALLATION AT NO COST TO THE OWNER. FOR A CONDUIT EMBEDDED IN CONCRETE TO BE CONSIDERED IT MUST BE THE ONLY REASONABLE SOLUTION AS DETERMINED BY THE ENGINEER. ALL PROPOSED INSTALLATIONS MUST COMPLY WITH ACI 318 AND BE ENGINEER APPROVED.

ALL UNDERGROUND CONDUITS SHALL BE SEALED AT BOTH ENDS.

NO CONDUIT PENETRATIONS ON THE TOP OF ANY OUTDOOR PANELS/ENCLOSURES.

EMT IS ACCEPTABLE IN CONDITIONED ELECTRICAL ROOMS AND OFFICE/BREAK AREAS ONLY. EMT SHALL BE TRANSITIONED PRIOR TO EXITING NON CORROSIVE SPACES. EMT SHALL NOT BE USED WHEN IT CAN BE EXPOSED TO ANY CORROSIVE GASES.

CONTROL WIRING REQUIREMENTS

EACH ANALOG INPUT REQUIRES AN 18/2 TWISTED SHIELDED PAIR IN 3/4" CONDUIT UNLESS NOTED OTHERWISE.

EACH ANALOG OUTPUT REQUIRES AN 18/2 TWISTED SHIELDED PAIR IN 3/4" CONDUIT UNLESS NOTED OTHERWISE.

EACH DISCRETE INPUT REQUIRES 2 #14's IN 3/4" CONDUIT UNLESS NOTED OTHERWISE.

EACH DISCRETE OUTPUT REQUIRES 2 #14's IN 3/4" CONDUIT UNLESS NOTED OTHERWISE.

CONTROL WIRING OF THE SAME TYPE MAY BE COMBINED INTO THE SAME CONDUIT. EXAMPLES: TWO 4-20MA ANALOG SIGNALS MAY BE COMBINED, TWO 24VDC DISCRETE SIGNALS MAY BE COMBINED, AND TWO 120VAC DISCRETE SIGNALS MAY BE COMBINED.

NOTE: INSTRUMENTS AND CABLE SHALL BE AS REQUIRED BY THE INSTRUMENT MANUFACTURER.

INSTRUMENT POWER

INSTRUMENTS REQUIRING 120 VAC:

1. MAGNETIC FLOW METERS
2. TURBIDITY TRANSMITTERS
3. pH TRANSMITTERS
4. ORP TRANSMITTERS
5. DO TRANSMITTERS
6. ULTRASONIC LEVEL TRANSMITTERS
7. ULTRASONIC FLOW TRANSMITTERS
8. INFLUENT AND EFFLUENT SAMPLERS

NOTE: THIS LIST IS PROVIDED AS A REFERENCE AND IS NOT ALL INCLUSIVE. COORDINATE WITH THE GENERAL CONTRACTOR AND THE EQUIPMENT SUPPLIERS FOR DETAILED WIRING REQUIREMENTS OF INSTRUMENTS, SENSORS, AND EQUIPMENT.

ELECTRICAL GENERAL NOTES

(GENERAL NOTES APPLICABLE TO ALL ELECTRICAL SHEETS)

1. CONTRACTOR SHALL EXAMINE NOT ONLY PLANS AND SPECIFICATIONS FOR ELECTRICAL AND INSTRUMENTATION, BUT PLANS AND SPECIFICATIONS FOR OTHER RELATED SECTIONS. VISIT THE SITE TO BECOME ACQUAINTED WITH ALL PROJECT CONDITIONS INCLUDING EXISTING CONDITIONS. EXECUTION OF CONTRACT IS EVIDENCE THAT THE CONTRACTOR HAS EXAMINED ALL DRAWINGS AND SPECIFICATIONS AND THAT ALL CONDITIONS OF INSTALLING THE WORK IN THIS SECTION ARE VERIFIED. LATE CLAIMS FOR LABOR AND MATERIALS REQUIRED DUE TO DIFFICULTIES ENCOUNTERED, WHICH COULD HAVE BEEN FORESEEN HAD EXAMINATIONS BEEN MADE WILL NOT BE RECOGNIZED.
2. THE DRAWINGS ARE DIAGRAMMATIC AND ARE NOT INTENDED TO INCLUDE EVERY DETAIL OF REQUIRED CONSTRUCTION, EQUIPMENT, AND MATERIALS. PROVIDE ALL MATERIALS AND WORK NOT SPECIFICALLY MENTIONED, SHOWN, OR CAN BE REASONABLY INFERRED ON THE DRAWINGS BUT WHICH ARE NECESSARY TO FULLY COMPLETE THE WORK.
3. WHEN SUBSTITUTING OTHER EQUIPMENT, MATERIALS, AND PRODUCTS THAN SPECIFIED IN THE CONTRACT DOCUMENTS, INCLUDE IN PRICING ALL COSTS FOR OTHER DESIGN CHANGES TO THE PROJECT (ALL DIVISIONS) WHICH WILL RESULT FROM USE OF THE SUBSTITUTED ITEM(S).
4. REVIEW THE CONTRACT DOCUMENTS OF OTHER DIVISIONS, AND COORDINATE ELECTRICAL AND CONTROL WORK WITH THE WORK OF OTHER DISCIPLINES TO AVOID CONFLICTS AND INTERFERENCE.
5. UPON COMPLETION OF THE WORK REQUIRED UNDER THIS CONTRACT, PROVIDE TYPED UPDATED DIRECTORY WITHIN DOOR OF EACH AFFECTED PANELBOARD. LEAVE "SPARE" BREAKERS IN "OFF" POSITION.
6. ALL MOUNTING HEIGHTS INDICATED ON DRAWINGS ARE TO CENTERLINE, UON.
7. PROVIDE LIGHTING FIXTURES COMPATIBLE WITH CEILING CONSTRUCTION. COORDINATE WITH ARCHITECTURAL ROOM FINISH SCHEDULES.
8. IN AREAS HAVING FINISHED CEILINGS, LOCATE CEILING-MOUNTED ELECTRICAL DEVICES AND FIXTURES ACCORDING TO ARCHITECTURAL REFLECTED CEILING PLAN. DO NOT INSTALL CEILING-MOUNTED SMOKE DETECTORS WITHIN 4 FEET OF HVAC SUPPLY DIFFUSERS.
9. IN ELECTRICAL AND MECHANICAL EQUIPMENT SPACES, COORDINATE EXACT LOCATIONS OF LIGHTING FIXTURES WITH CONDUIT BANKS, DUCTWORK, PIPING, STRUCTURE, SUPPORTS, AND OTHER OBSTRUCTIONS. LOCATE FIXTURES SUCH THAT DIALS, GAUGES, METERS, ETC. ARE PROPERLY ILLUMINATED.
10. DO NOT USE ANY LIGHTING FIXTURE AS A RACEWAY FOR CONDUCTORS NOT SERVING THAT PARTICULAR FIXTURE.
11. CONNECT BATTERY-OPERATED EMERGENCY LIGHTING UNITS AND EXIT SIGNS HAVING BATTERY BACK-UP TO UNSWITCHED LEG OF LOCAL LIGHTING CIRCUIT IN ACCORDANCE WITH MANUFACTURER'S RECOMMENDATIONS AND NEC SUCH THAT FAILURE OF CIRCUIT TRANSFERS UNIT FROM NORMAL TO EMERGENCY MODE, CAUSING LAMPS TO RE-ENERGIZE.
12. DO NOT INSTALL OUTLET BOXES BACK-TO-BACK IN NON-RATED PARTITIONS. OFFSET AND SEAL, SIMILAR TO REQUIREMENTS FOR RATED PARTITIONS, TO MINIMIZE SOUND TRANSMISSION.
13. COORDINATE ROUTING OF ALL LARGE CONDUITS (2" DIA AND LARGER) AND PULL BOX LOCATIONS WITH GENERAL CONTRACTOR PRIOR TO INSTALLATION TO AVOID CONFLICTS AND TO GUARANTEE REQUIRED CLEARANCE AND ACCESSIBILITY OF ELECTRICAL AND OTHER SYSTEMS.
14. COORDINATE WITH OWNER OR OWNER'S SELECTED VENDOR PRIOR TO ROUGH-IN FOR EXACT LOCATIONS OF SPECIAL PURPOSE OUTLETS DEDICATED TO SPECIFIC EQUIPMENT. VERIFY REQUIRED NEMA CONFIGURATION OF ALL SUCH OUTLETS.
15. PROVIDE APPROPRIATE PULL WIRE IN EACH EMPTY SYSTEMS CONDUIT INCLUDED IN THIS PROJECT.
16. INCLUDE GREEN-INSULATED GROUNDING CONDUCTOR SIZED PER 2002 NEC TABLE 250-122 WITH ALL BRANCH CIRCUIT CONDUCTORS SERVING LIGHTING FIXTURES, RECEPTACLES, MECHANICAL OR OTHER DEVICES INSTALLED AT OR BELOW 8'-0".
17. MATCH A.I.C. RATINGS AND OTHER CHARACTERISTICS OF EXISTING DEVICES IN PANELBOARD WHEN ADDING BREAKERS TO EXISTING PANELBOARDS.
18. ALL WORK SHALL BE IN CONFORMANCE WITH THE NATIONAL ELECTRICAL CODE - LATEST EDITION ADOPTED BY INDIANA, THE INDIANA CODE AMENDMENT, LOCAL/MUNICIPAL CODE, AND THE AUTHORITIES HAVING JURISDICTION.
19. ALL CONNECTIONS TO EQUIPMENT SUBJECT TO MOVEMENT OR VIBRATION SHALL BE LIQUID TIGHT FLEXIBLE METAL CONDUIT, NOT LESS THAN 12" IN LENGTH, NOR GREATER THAN 36" IN LENGTH.
20. ALL CONDUIT PENETRATIONS SHALL BE SEALED WITH APPROPRIATE CONDUIT SEALING MATERIAL.
21. ALL CABLE SIZES SHALL UTILIZE COPPER CONDUCTORS.
22. FIELD VERIFY LOCATIONS OF BUILDING EXPANSION JOINTS WHEN ROUTING CONDUIT. ALL CONDUITS CROSSING EXPANSION JOINTS SHALL BE INSTALLED WITH THE EXPANSION FITTINGS. EXPANSION FITTINGS SHALL BE INSTALLED IN ACCORDANCE WITH THE NEC AND MANUFACTURERS WRITTEN RECOMMENDATIONS.
23. FEEDERS FROM PANELBOARDS BACK TO MAIN SWITCHBOARD, BETWEEN AUTO TRANSFER SWITCHES AND THEIR SOURCES/LOADS, BETWEEN DRY TRANSFORMERS AND THEIR SOURCES/LOADS ARE NOT INDICATED. FEEDERS ARE PART OF THE WORK, AND SHALL BE SIZED AS INDICATED ON THE LINE DIAGRAM.
24. HOMERUNS SHALL NOT BE COMBINED IN A RACEWAY UNLESS SHOWN ON THE CONTRACT DRAWINGS. SINGLE PHASE BRANCH CIRCUIT HOMERUNS MAY BE COMBINED AT THE CONTRACTORS DISCRETION NOT GREATER THAN (3) PHASE CONDUCTORS, NEUTRAL CONDUCTORS, AND A GROUNDING CONDUCTOR.
25. EACH SINGLE PHASE BRANCH CONDUCTOR SHALL HAVE A DEDICATED NEUTRAL BACK TO THE PANEL.
26. ALL PENETRATIONS BELOW GRADE SHALL USE LINK SEALS.
27. WHERE LOW VOLTAGE (CONTROL) CABLING IS ALLOWED TO BE INSTALLED WITHOUT A RACEWAY, IT SHALL BE SUPPORTED NOT EXCEEDING INTERVALS OF 48", AND NOT MORE THAN 6" FROM THE CABINETS, BOXES, FITTINGS, OUTLETS, RACKS, FRAMES AND TERMINALS.
28. ALL MOUNTING HARDWARE INCLUDING NUTS, BOLTS, SCREWS, WASHERS, ETC. SHALL BE STAINLESS STEEL.
29. MOUNT JUNCTION BOXES AND DISCONNECT SWITCHES ON STAINLESS STEEL UNISTRUT.
30. ALL UNISTRUT, MOUNTING BRACKETS AND SUPPORTING STRUCTURES SHALL BE STAINLESS STEEL.
31. DO NOT MIX CONTROL AND POWER CONDUCTORS IN THE SAME CONDUIT. DO NOT MIX DISCRETE AND ANALOG CONTROL CONDUCTORS IN THE SAME CONDUIT.
32. ADJUSTABLE SPEED DRIVES (ASD) LINE AND LOAD WIRE SHALL BE RUN IN SEPARATE RACEWAYS.
33. CONTRACTOR SHALL COORDINATE WITH HEAT TRACE MANUFACTURER DURING BIDDING AND CONSTRUCTION AND SHALL PROVIDE ALL CONDUIT, WIRING, AND CIRCUITS AS REQUIRED. HEAT TRACE SHALL BE PROVIDED/INSTALLED COMPLETE. ALL HEAT TRACE IS REQUIRED TO BE GFI PROTECTED.
34. CONTRACTOR SHALL NOT COMBINE POWER FEEDS FOR THREE PHASE LOADS.
35. THE BELOW LOCATIONS ARE WHERE GFCI OUTLETS ARE REQUIRED:
    - 35.1. KITCHENS: ALL KITCHEN OUTLETS.
    - 35.2. BATHROOMS: GFCI OUTLETS ARE REQUIRED IN BATHROOMS NEAR THE SINK.
    - 35.3. GARAGES: GFCI OUTLETS ARE REQUIRED IN GARAGES THAT HAVE SINKS.
    - 35.4. BASEMENTS: UNFINISHED BASEMENTS REQUIRE AT LEAST ONE GFCI OUTLET.
    - 35.5. OUTDOOR SPACES: GFCI OUTLETS ARE REQUIRED IN OUTDOOR AREAS THAT ARE ACCESSIBLE OR AT GRADE LEVEL.
    - 35.6. LAUNDRY ROOMS: ALL LAUNDRY ROOM OUTLETS.
    - 35.7. CRAWL SPACES: GFCI OUTLETS ARE REQUIRED IN CRAWL SPACES WHERE MECHANICAL EQUIPMENT IS LOCATED.
    - 35.8. UTILITY ROOMS: ALL UTILITY ROOM OUTLETS.
36. LIMIT CAT 6E INSTALLATION TO 230' MAXIMUM DISTANCE. CONTRACTOR SHALL FURNISH AND INSTALL FIBER OPTIC CABLE AND MEDIA CONVERTERS IF CONDUIT ROUTING EXCEEDS CAT 6E LIMITS.

LEGEND

SYMBOL	DESCRIPTION	MTG HGT AFF TO CL, UON
□ □ ○	OPEN LIGHTING FIXTURE SYMBOLOGY DENOTING FIXTURES CONNECTED TO NORMAL POWER: FIXTURE TYPE DETERMINES MOUNTING.	-----
⧄ ⧄ ⊘	SINGLE DIAGONAL LIGHTING FIXTURE SYMBOLOGY DENOTING FIXTURES CONNECTED TO CRITICAL OR EQUIPMENT BRANCH (OR EMERGENCY POWER), UON: FIXTURE TYPE DETERMINES MOUNTING.	-----
⊠ ⊠ ⊗	DOUBLE DIAGONAL LIGHTING FIXTURE SYMBOLOGY DENOTING FIXTURES CONNECTED TO LIFE SAFETY BRANCH (OR EMERGENCY POWER), UON: FIXTURE TYPE DETERMINES MOUNTING.	-----
	BATTERY POWERED EMERGENCY LIGHTING UNIT	7'-6"
⊗	EXIT SIGN: ARROWS DENOTE DIRECTIONAL INDICATING CHEVRON RQMTS, SHADING DENOTES FACE(S) ORIENTATION.	-----
◑	WALLWASH OR OTHER DIRECTIONALLY ADJUSTABLE/AIMABLE FIXTURE: OPEN SIDE DENOTES ORIENTATION. TYPE DETERMINES MOUNTING.	-----
▽ ▽ ▽	TRACK LIGHTING FIXTURE: TYPE DETERMINES MOUNTING.	-----
○□ ○○	POLE-MOUNTED SITE LIGHTING FIXTURE: TYPE DETERMINES MTG.	-----
◁	FLOOD LIGHTING FIXTURE: TYPE DETERMINES MOUNTING.	-----
PC	PHOTO-CELL	-----
⬡	ALL FIXTURES IN THIS SPACE SHALL BE SAME TYPE INDICATED, U.O.N.	
S	SINGLE-POLE TOGGLE SWITCH	3'-10"
$	SINGLE-POLE TOGGLE SWITCH: SLASH DENOTES ESSENTIAL POWER SYSTEM CONNECTION - TYPICAL FOR ALL SWITCHES.	3'-10"
OS_W	DUAL TECHNOLOGY, WALL MNTD OCCUPANCY SENSOR WITH MANUAL OVERRIDE SWITCH	3'-10"
OS_C	DUAL TECHNOLOGY, CEILING MNTD OCCUPANCY SENSOR WITH REMOTE MANUAL OVERRIDE SWITCH	
S_{OR}	SINGLE-POLE REMOTE OVERRIDE SWITCH FOR CEILING MNTD OCCUPANCY SENSOR	3'-10"
S_D	DIMMER SWITCH	3'-10"
$S_D{}^3$	THREE-WAY DIMMER SWITCH	3'-10"
S_P	SINGLE-POLE TOGGLE SWITCH WITH PILOT LIGHT	3'-10"
S_M	SINGLE-POLE MOTOR-RATED TOGGLE SWITCH DISCONNECT	3'-10"
S_T	SINGLE-POLE OR DOUBLE-POLE MANUAL MOTOR STARTER WITH MELTING ALLOY ELEMENTS FOR THERMAL OVERLOAD PROTECTION	3'-10"
S_{IR}	OCCUPANCY SENSOR SWITCH	3'-10"
S_{IT}	INTERVAL TIMER RESET AND CONTROL SWITCH	3'-10"
S_J	JOG SWITCH	3'-10"
◙	MUSHROOM HEAD TYPE PUSHBUTTON STATION	5'-0"
P	AUTO DOOR CONTROL PUSHPLATE	-----
S_V	VARIABLE INTENSITY CONTROLLER INCLUDED WITH OWNER-FURNISHED-CONTRACTOR-INSTALLED SURGICAL LIGHTING FIXTURE	5'-0"
S_{LV}	LOW VOLTAGE CONTROL SWITCH	3'-10"
WS	FACTORY SUPPLIED WALL CONTROLLER FOR CEILING MOUNTED LIGHT-INSTALLED BY ELECTRICAL CONTRACTOR	3'-10"
	120V DUPLEX RECEPTACLE, STANDARD MOUNTING HEIGHT	1'-6"
	120V DUPLEX RECEPTACLE, SPECIAL MOUNTING HEIGHT INSTALL AT SAME HEIGHT AS SWITCHES IF NO HEIGHT IS INDICATED	ABOVE COUNTER
	120V QUADRUPLEX RECEPTACLE, STANDARD MOUNTING HEIGHT	1'-6"
	120V QUADRUPLEX RECEPTACLE, SPECIAL MOUNTING HEIGHT INSTALL AT SAME HEIGHT AS SWITCHES IF NO HEIGHT IS INDICATED	ABOVE COUNTER
	120V SINGLE RECEPTACLE, AMP RATING (IF OTHER THAN 20A) SHOWN: STANDARD MOUNTING HEIGHT, OR OTHER HEIGHT AS NOTED	1'-6", UON
GFCI	120V GFCI DUPLEX RECEPTACLE, STANDARD MOUNTING HEIGHT	1'-6"
	120V GFCI QUADRUPLEX RECEPTACLE, SPECIAL MOUNTING HEIGHT INSTALL AT SAME HEIGHT AS SWITCHES IF NO HEIGHT IS INDICATED	ABOVE COUNTER
	120V GFCI DUPLEX RECEPTACLE, SPECIAL MOUNTING HEIGHT INSTALL AT SAME HEIGHT AS SWITCHES IF NO HEIGHT IS INDICATED	ABOVE COUNTER
	SINGLE RECEPTACLE (OTHER THAN 120V), VOLTAGE, AMP RATING, NEMA CONFIGURATION, AND MOUNTING HEIGHT AS NOTED	-----
	RECPTACLE OR J-BOX CONNECTION FOR X-RAY VIEWER: VERIFY CONNECTION RQMTS WITH UNIT FURNISHED PRIOR TO ROUGH-IN	-----
⦿	120V DUPLEX RECEPTACLE IN FLUSH FLOOR-MOUNTED BOX	-----
TP	TELE-POWER POLE	-----
H	HALON DUMP STATION	-----
F	FIRE ALARM MANUAL PULL STATION	3'-10"
FK	FIRE ALARM MANUAL PULL STATION, KEY-OPERATED	3'-10"
Ⓓ	FIRE ALARM CEILING-MOUNTED SMOKE DETECTOR	-----
Ⓗ	FIRE ALARM CEILING-MOUNTED HEAT DETECTOR	-----
D_S	FIRE ALARM SUPPLY AIR DUCT-MOUNTED SMOKE DETECTOR	-----
D_R	FIRE ALARM RETURN AIR DUCT-MOUNTED SMOKE DETECTOR	-----
DR◁	FIRE ALARM PROJECTED BEAM SMOKE DETECTOR - RECEIVER	AS NOTED
DT◁	FIRE ALARM PROJECTED BEAM SMOKE DETECTOR - TRANSMITTER	AS NOTED
Y	FIRE ALARM CONNECTION TO SPRINKLER SYSTEM VALVE STATUS SWITCH (TAMPER SWITCH)	-----
FS	FIRE ALARM CONNECTION TO SPRINKLER SYSTEM WATER FLOW SWITCH	-----
F○	FIRE ALARM AUDIO/VISUAL NOTIFICATION DEVICE-CHIME & STROBE	6'-8"
F◁	FIRE ALARM AUDIO/VISIUAL NOTIFICATION DEVICE-HORN & STROBE	6'-8"
Ⓕ	FIRE ALARM VISUAL ONLY NOTIFICATION DEVICE - STROBE LIGHT	6'-8"
FS FS	FIRE ALARM SPEAKER: CEILING-MOUNTED, WALL-MOUNTED	6'-8"
FH◁	FIRE ALARM HORN, WALL-MOUNTED	AS NOTED
RI RI	DUCT SMOKE DETECTOR ALARM REMOTE INDICATOR LIGHT: CEILING-MOUNTED, WALL-MOUNTED	6'-8"
SAI SAI	DUCT SMOKE DETECTOR ALARM REMOTE INDICATOR LIGHT AND TEST SWITCH: CEILING-MOUNTED, WALL-MOUNTED	6'-8"
Z	FIRE ALARM ZONE ADDRESSABLE MODULE	-----
I	FIRE ALARM INDIVIDUAL ADDRESSABLE MODULE	-----
◆	FIRE ALARM ELECTRO-MAGNETIC DOOR HOLDER	6'-4"
FR	FIRE RELAY	-----
ID	DESK MOUNTED INTERCOM	-----
IW	WALL MOUNTED INTERCOM	-----
$\$_X$	EXPLOSION PROOF SWITCH	3'-10"
$\$_3$	3 WAY SWITCH	3'-10"
$\$_4$	4 WAY SWITCH	3'-10"
$\$_{WP}$	NEMA 4X SWITCH	3'-10"

PUMP AND METER LEGEND

SYMBOL	DESCRIPTION
M	MAGNETIC FLOW METER
	SONIC FLOW METER
	CENTRIFUGAL PUMP
	LOBE PUMP
	PERISTALTIC PUMP
	SUBMERSIBLE PUMP
	GRINDER PUMP

LEGEND

ABBREVIATIONS

ABV	ABOVE	IG	ISOLATED GROUND
AFF	ABOVE FINISHED FLOOR	MON	MONITOR
ACLG	ABOVE FINISHED CEILING	MTG	MOUNTING
BFC	BELOW FINISHED CEILING	MV	MULTI-VIEWER
C	CRITICAL BRANCH OR EMERG PWR-RED DEVICE & PLATE, UON.	MW	MICROWAVE OVEN
CL	CENTER-LINE	NEC	NATIONAL ELECTRICAL CODE
CLG	CEILING-MOUNTED	OCPD	OVERCURRENT PROTECTIVE DEVICE
COF	COFFEE MAKER	OFCI	OWNER-FURNISHED-CONTRACTOR-INSTALLED
COP	COPIER	OFE	OWNER-FURNISHED EQUIPMENT
CTR	COUNTER	PRT	PRINTER
ECB	ENCLOSED CIRCUIT BREAKER	PTS	PNEUMATIC TUBE STATION
EMER	EMERGENCY	Q	EQUIP BRANCH OR EMERG PWR-RED DEVICE & PLATE, UON.
EWC	ELECTRIC WATER COOLER	REF	REFRIGERATOR
EWH	ELECTRIC WATER HEATER	RQMTS	REQUIREMENTS
FAX	FACSIMILE MACHINE	T	TAMPERPROOF DEVICE
FBO	FURNISHED BY OTHERS	TSP	TWISTED SHIELDED PAIR
GFCI	GROUND FAULT CIRCUIT INTERRUPT-ING - PERSONNEL PROTECTION	UON	UNLESS OTHERWISE NOTED
GFI	GROUND FAULT INTERRUPTING - EQUIPMENT PROTECTION	UCR	UNDER-COUNTER REFRIGERATOR
HGT	HEIGHT	WP	WEATHERPROOF
FPMR	FUSED PER MANUFACTURE'S RECOMMENDATIONS		

SYMBOL	DESCRIPTION	MTG HGT AFF TO CL, UON
	EXPOSED RACEWAY	-----
	RACEWAY CONCEALED IN OR ABOVE CEILINGS AND WITHIN WALLS	-----
	BRANCH CIRCUIT RACEWAY CONCEALED IN OR BELOW FLOOR SLAB OR BELOW GRADE	-----
	FEEDER RACEWAY CONCEALED BELOW FLOOR SLAB OR BELOW GRADE	-----
	LIGHTNING PROTECTION CABLING	-----
	HOMERUN RACEWAY: NUMBER OF ARROWHEADS DENOTES NUMBER OF CIRCUITS.	-----
	RACEWAY TURNING UP AS VIEWED FROM THE LOAD	-----
	RACEWAY TURNING DOWN AS VIEWED FROM THE LOAD	-----
	RACEWAY VERTICAL RISER WITH HORIZONTAL CONTINUATION AT TWO LEVELS SHOWN	-----
	CAPPED RACEWAY	-----
	GENERAL LIGHTING OR OUTLET CIRCUIT - MAY BE DAISY CHAINED	
Ⓙ	JUNCTION BOX	AS NOTED
◪	ENCLOSED BREAKER	
	FUSIBLE SAFETY SWITCH (AMP RATING, POLES, FUSE SIZE, AND NEMA ENCLOSURE TYPE IF OTHER THAN 1 NOTED)	-----
	NON-FUSIBLE SAFETY SWITCH (AMP RATING, POLES, AND NEMA ENCLOSURE TYPE IF OTHER THAN 1 NOTED)	-----
⊠	COMBINATION MAGNETIC ACROSS-THE-LINE STARTER WITH MOTOR CIRCUIT PROTECTOR (NEMA STARTER SIZE NOTED)	-----
▩	CONTROL PANEL FURNISHED INTEGRAL TO EQUIPMENT (SINGLE-POINT ELECTRICAL CONNECTION REQUIRED)	-----
	MOTOR	-----
	FLEXIBLE CONDUIT CONNECTION	-----
▬ ▬	SURFACE- OR FLUSH-MOUNTED LIGHTING/RECEPTACLE PANELBOARD	-----
▨	POWER DISTRIBUTION PANELBOARD	-----
T T	DRY TYPE TRANSFORMER	-----
XXX	MISCELLANEOUS SYSTEMS PANEL OR CABINET: REFER TO ABBREVIATIONS.	-----

NOTE !! ALL ABBREVIATIONS, NOTES, AND SYMBOLS SHOWN ON THIS DRAWING DO NOT NECESSARILY APPEAR IN THIS SET OF CONTRACT DOCUMENTS. REFER ONLY TO THOSE THAT APPLY.

MOTOR CONTROLLER LEGEND

SYMBOL	DESCRIPTION
☒ MS	ACROSS THE LINE MOTOR STARTER
☐ SS	SOFT STARTER
☐ VFD	VARIABLE FREQUENCY DRIVE
MS ☒	ACROSS THE LINE MOTOR STARTER WITH INTEGRAL DISCONNECT
SS ☐	SOFT STARTER WITH INTEGRAL DISCONNECT
VFD ☐	VARIABLE FREQUENCY DRIVE WITH INTEGRAL DISCONNECT

LIGHTING LEGEND

SYMBOL	DESCRIPTION
○	FIXTURE WITH STANDARD BALLAST.
●	FIXTURE WITH STANDARD BALLAST AND EMERGENCY BALLAST.

COMMONWEALTH™ ENGINEERS, INC.
A wealth of resources to master a common goal.
https://commonwealthengineers.com/

MICHAEL A. MIRANDE, II
No. 19800084
STATE OF INDIANA
Michael A. Mirande II
Signature 07/08/2025
Date

CITY OF GARRETT, IN
DEKALB COUNTY

SR 8-CR 15
SANITARY SEWER AND WATER MAIN EXTENSION

Indiana811 Know what's below. Call before you dig.
Know what's below. 811 before you dig.
1-800-382-5544
(ITS THE LAW)

No.	Submittal / Revision	By	Date

Designed By:	Drawn By:	Checked By:
CM	CM	MAM
Issue Date:	Project No:	Scale:
6/2025	S24214	AS SHOWN

ELECTRICAL LEGENDS AND SCHEDULES

Drawing No:
E0-0

Sheet: 23 OF 26

File: Z:\SHARED\IN CLIENTS A-L\GARRETT\J24214 - SR 8 -CR 15 HOLLMAN PROJECT\06 CAD\K MECH-ELECT\J24214-GARRETT-CR 15 LS-ELECTRICAL.DWG
Saved: 7/8/2025 10:55:07 AM Plotted: 7/8/2025 11:13:44 AM Current User: Chris Means LastSavedBy: cmeans

NEMA 4X CONTROL PANEL DEVICE LEGEND

ITEM#	DESCRIPTION
1	ILSCO (OR EQUAL) POWER DISTRIBUTION BLOCK.
2	PILOT DEVICES (TYPICAL FOR EACH PUMP): VFD RUNNING LIGHT, OVERLOAD LIGHT, SEAL FAIL LIGHT, HIGH MOTOR TEMP LIGHT, VFD FAULT LIGHT, VFD FAULT RESET PUSHBUTTON, HOA SWITCH, AND ELAPSED TIME METER. PILOT DEVICES TO BE MOUNTED ON PANEL DEAD DEAD FRONT.
3	NEMA 4 ALARM LIGHT WITH INTEGRAL BUZZER AND ALARM ACKNOWLEDGE PUSHBUTTON LOCATED ON SIDE OF PANEL.
4	ALTERNATING RELAYS AND CONTROL RELAYS AS REQUIRED.
5	ACROSS THE LINE MOTOR STARTERS, SIZED AS REQUIRED FOR THE LOAD.
6	ISOLATION CIRCUIT BREAKERS WITH LOCKOUT/TAGOUT CAPABILITY. BREAKER ACCESSIBLE THROUGH DEAD FRONT.
7	MISCELLANEOUS COMPONENTS INCLUDING BUT NOT LIMITED TO PILOT RELAYS, TERMINAL BLOCKS, CIRCUIT BREAKERS, CONTROL TRANSFORMER, POWER SUPPLIES, ETHERNET SWITCH, ETC. TO PROVIDE FOR A COMPLETE AND FUNCTIONING CONTROL PANEL.
8	HEATER WITH INTEGRAL THERMOSTAT.
9	3 POINT LATCHING SYSTEM ON ON PANEL DOOR (CLAMPS NOT ACCEPTABLE).
10	PROVIDE AND MOUNT TO PANEL DEAD FRONT A 20A RATED CONVENIENT OUTLET.
11	EMERGENCY RECEPTACLE WITH ANGLE ADAPTER. COORDINATE WITH OWNER FOR EXACT PART NUMBER BEFORE ORDERING.
12	PROVIDE INTRINSICALLY SAFE BARRIERS FOR FLOATS.

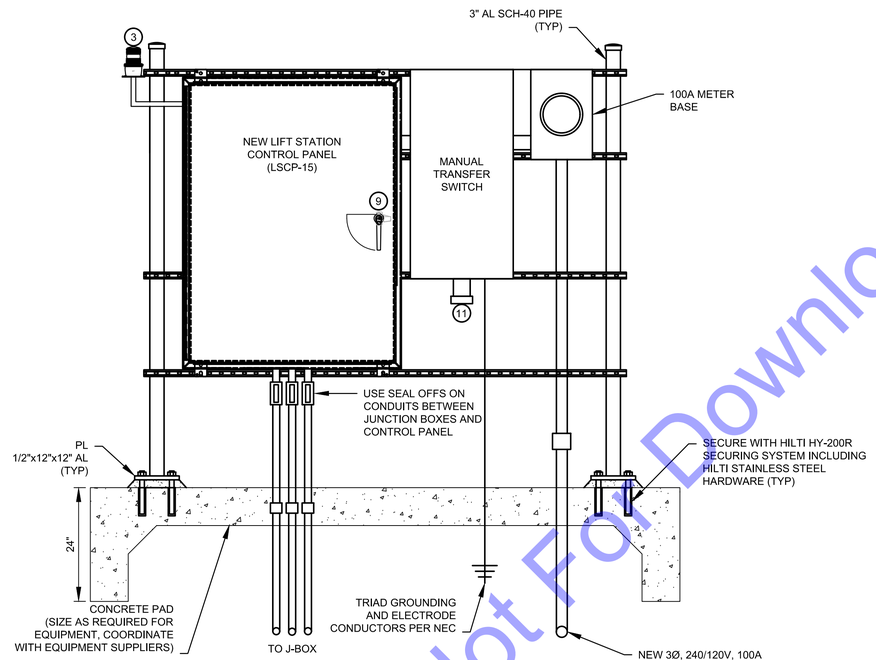

ELECTRICAL PANEL MOUNTING DETAILS

NOT TO SCALE

Load Wiring Schedule		
	Copper Wire	
Type #:	Quantity and Wire Size	Conduit
20	3 #12's & #12 Ground	3/4"
30	3 #10's & #10 Ground	3/4"
50	3 #8's & #10 Ground	3/4"
60	3 #6's & #8 Ground	3/4"
80	3 #4's & #8 Ground	1"
100	3 #2's & #6 Ground	1.5"
125	3#1's & #6 Ground	1.5"
150	3 - 2/0 & #6 Ground	2"
200	3 - 4/0 & #4 Ground	2.5"
250	3 - 300's & #4 Ground	3"

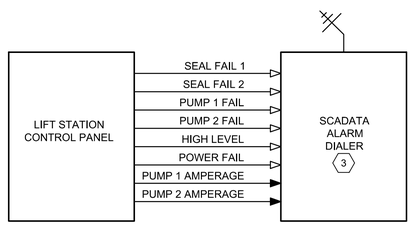

LIFT STATION ALARM DIALER DETAIL

NOTES:

1. SIZE NEMA 4X CONTROL PANEL AS REQUIRED.
2. CONTROL PANEL SHALL BE CONSTRUCTED TO UL STANDARDS IN A UL PANEL SHOP. CONTROL PANEL SHALL BE UL LISTED.
3. CONTRACTOR IS RESPONSIBLE FOR COORDINATING WITH THE ELECTRIC UTILITY TO PROVIDE POWER SERVICE TO THE NEW LIFT STATION. PROVIDE CONDUIT, WIRE, METER BASE, ETC. TO PROVIDE POWER COMPLETE TO THE LIFT STATION.
4. CONTRACTOR TO PROVIDE METER BASE PER ELECTRIC UTILITY METER BASE REQUIREMENTS.
5. ALL COSTS ASSOCIATED WITH PROVIDING POWER TO THE LIFT STATION SHALL BE INCLUDED IN THE CONTRACTOR'S BID PRICE.
6. PILOT DEVICES, ELAPSED TIME METERS, AND TOUCH SCREEN SHALL BE MOUNTED ON THE PANEL DEAD FRONT.
7. PROVIDE RADAR LEVEL SENSOR CONTROL WITH FLOAT BACKUP.

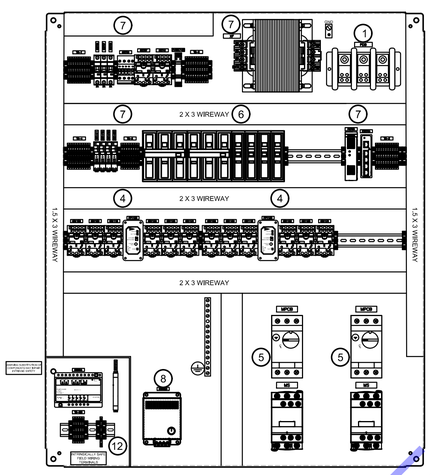

INTERIOR

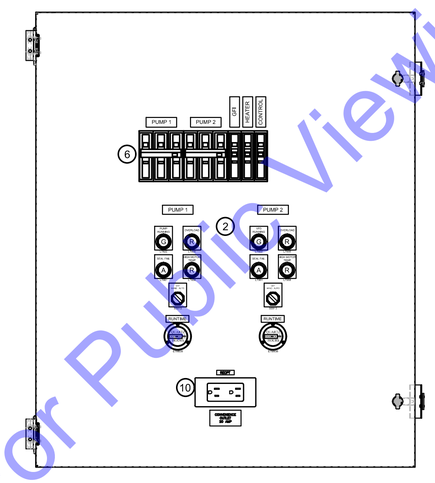

DEADFRONT

CONTROL PANEL DETAIL

SCALE: NTS

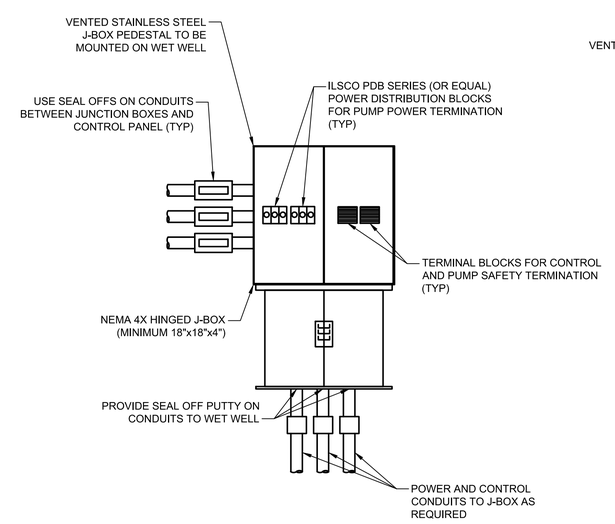

VENTILATED JUNCTION BOX INTERIOR DETAIL

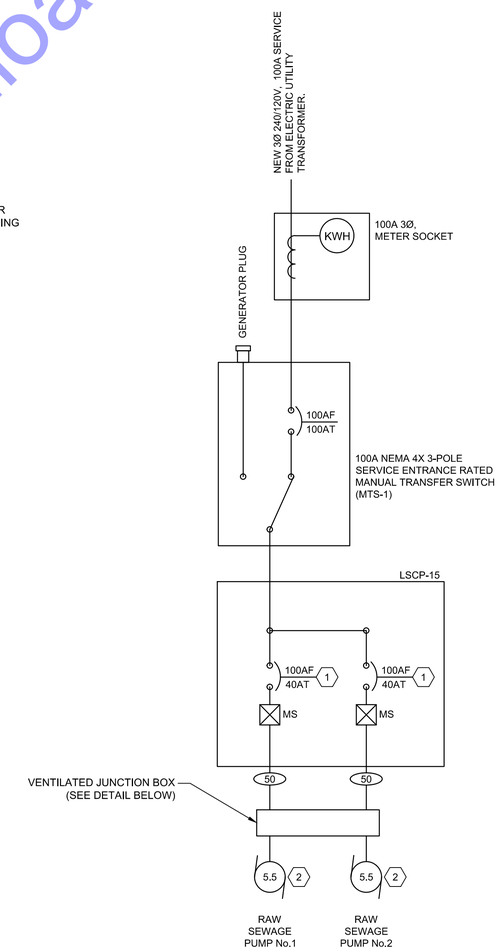

ONE LINE DIAGRAM

SCALE: NTS

PLAN NOTES:

1. COORDINATE WITH THE CONTRACTOR AND EQUIPMENT SUPPLIERS WHEN SELECTING THE CIRCUIT BREAKER SIZES TO ENSURE NEW CIRCUIT BREAKERS ARE PROPERLY SIZED.
2. WIRE PUMP SAFETIES AND LEVEL CONTROLS AS REQUIRED. COORDINATE WITH CONTRACTOR DURING BIDDING AND CONSTRUCTION. INTEGRATE PUMP SAFETY RELAYS INTO CONTROL PANEL AS REQUIRED BY PUMP MANUFACTURER.
3. THE CONTRACTOR IS RESPONSIBLE FOR PROVIDING AND INSTALLING THE SCADATA ALARM DIALER COMPLETE INCLUDING ALL CONDUIT, WIRE, AND TERMINATIONS. CONTRACTOR SHALL INSTALL ANTENNA AND ANTENNA CABLE.

COMMONWEALTH ENGINEERS, INC.
A wealth of resources to make a difference.
https://commonwealthengineers.com/

MICHAEL A. MIRANDE II
REGISTERED
No. 19800084
STATE OF INDIANA
PROFESSIONAL ENGINEER
Signature 07/08/2025 Date

CITY OF GARRETT, IN
DEKALB COUNTY

SR 8-CR 15
SANITARY SEWER AND WATER MAIN EXTENSION

Indiana 811 Know what's below. Call before you dig.
Know what's below. 811 before you dig.
1-800-382-5544 (ITS THE LAW)

No.	Submittal / Revision	By	Date

Designed By:	Drawn By:	Checked By:
CM	CM	MAM
Issue Date: 6/2025	Project No: S24214	Scale: AS SHOWN

ONE LINE DIAGRAM AND CONTROL PANEL DETAILS

Drawing No: E1-0

Sheet: 24 OF 26

File: Z:\SHARED\IN CLIENTS A-L\GARRETT\24214 - SR 8 -CR 15 HOLLMAN PROJECT\06 CAD\K MECH-ELECT\24214-GARRETT-CR 15 LS-ELECTRICAL.DWG
Saved: 7/8/2025 10:55:07 AM Plotted: 7/8/2025 11:13:49 AM Current User: Chris Means LastSavedBy: cmeans

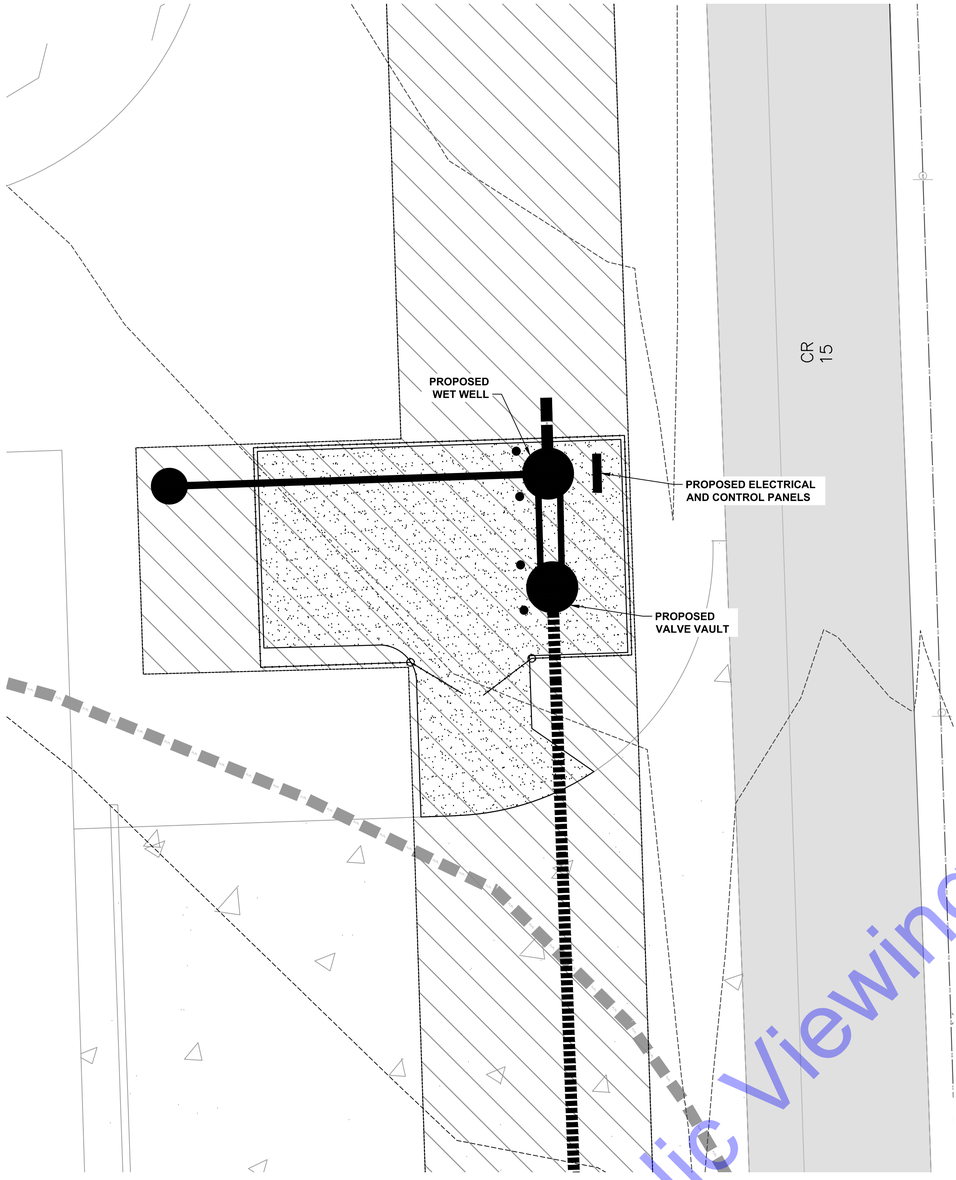

SITE PLAN

SCALE: 1"=10'-0"

0 10' 20'

ELECTRICAL NOTES:

1. THE PUMP STATION WETWELL IS CLASSIFIED AS CLASS 1, DIVISION 1, GROUP C AND D AREAS PER NFPA 820. THE CLASS 1, DIVISION 1 AREA EXTENDS TO 18" ABOVE THE PUMP STATION TOP SLAB AND EXTENDS 3' BEYOND ALL SIDES. ANY EQUIPMENT LOCATED WITHIN THE CLASSIFIED AREA SHALL BE UL LISTED FOR THAT AREA. ALL WIRING METHODS SHALL CONFORM TO THE REQUIREMENTS OF NEC.
2. THE PUMP STATION VALVE VAULT AND METER VAULT ARE CLASSIFIED AS CLASS 1, DIVISION 2, GROUP C AND D AREAS PER NFPA 820. THE CLASS 1, DIVISION 1 AREAS EXTENDS TO 18" ABOVE THE TOP SLAB AND EXTENDS 3' BEYOND ALL SIDES. ANY EQUIPMENT LOCATED WITHIN THE CLASSIFIED AREA SHALL BE UL LISTED FOR THAT AREA. ALL WIRING METHODS SHALL CONFORM TO THE REQUIREMENTS OF NEC.
3. ALL CONDUITS ENTERING HAZARDOUS LOCATIONS, AS NOTED IN PRECEDING NOTES, SHALL HAVE SEAL FITTINGS BEFORE ENTRANCE INTO AREA. CONDUITS LEAVING HAZARDOUS LOCATIONS SHALL HAVE SEAL FITTINGS AFTER LEAVING THE HAZARDOUS AREA.
4. ALL EXPOSED CONDUITS SHALL BE ALUMINUM ONLY (NO EXCEPTIONS).
5. ALL CONDUITS AT THE WETWELL ARE TO BE ROUTED THROUGH THE WETWELL SIDEWALL OR TOP SLAB IN A NON-OBSTRUCTIVE MANNER TO AVOID HAZARD. DO NOT ROUTE ANY EXPOSED CONDUITS WITHIN THE WETWELL AREA OR ON TOP OF THE WETWELL SLAB.
6. COORDINATE ALL ACTIVITIES ON SITE WITH LOCAL UTILITY.

COMMONWEALTH ENGINEERS, INC.
A wealth of resources to make a difference.
https://commonwealthengineers.com/

MICHAEL A. MIRANDE II
REGISTERED
No. 19800084
STATE OF INDIANA
PROFESSIONAL ENGINEER

Signature 07/08/2025 Date

CITY OF GARRETT, IN
DEKALB COUNTY

SR 8-CR 15
SANITARY SEWER AND WATER MAIN
EXTENSION

Know what's below. Call before you dig.
Know what's below. 811 before you dig.
1-800-382-5544
(ITS THE LAW)

No.	Submittal / Revision	By	Date

Designed By:	Drawn By:	Checked By:
CM	CM	MAM
Issue Date: 6/2025	Project No: S24214	Scale: AS SHOWN

ELECTRICAL SITE PLAN

Drawing No:
E2-0

Sheet: 25 OF 26

File: Z:\SHARED\IN CLIENTS A-L\GARRETT\S24214 - SR 8 -CR 15 HOLLMAN PROJECT\06 CAD\K MECH-ELECT\S24214-GARRETT-CR 15 LS-ELECTRICAL.DWG
Saved: 7/8/2025 10:55:07 AM Plotted: 7/8/2025 11:14:03 AM Current User: Chris Means LastSavedBy: cmeans

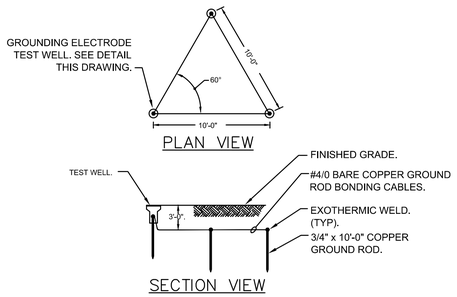

GROUNDING ELECTRODE SYSTEM

NOT TO SCALE

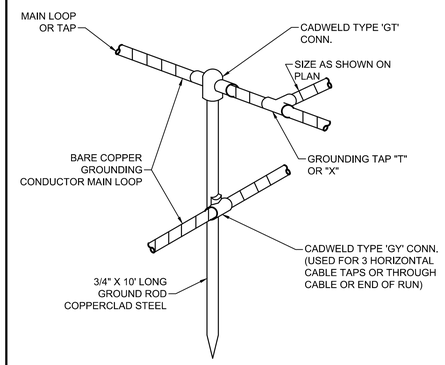

CONDUCTOR TO GROUND ROD CONNECTION DETAIL

NOT TO SCALE

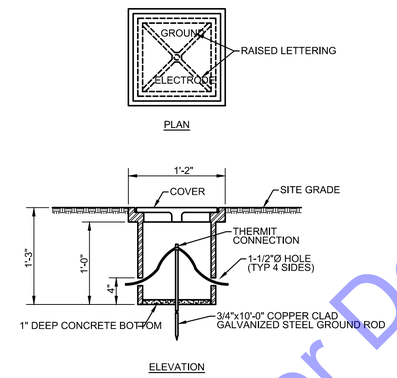

TYPICAL GROUND ROD AND ACCESS BOX DETAIL

NOT TO SCALE

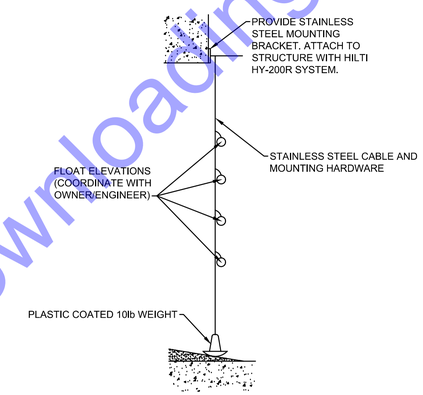

FLOAT MOUNTING DETAIL

NOT TO SCALE

Single Eye, Split Mesh, Lace Closing

Single Eye, Split Mesh, Lace Closing*

For permanent support when cable end is not available to be installed through grip.

Cable Diameter Range Inches (cm)	Approx. Breaking Strength Lbs. (N)	E Inches (cm)	M Inches (cm)	Catalog Number
.75"-.99" (1.90-2.51)	2,820 (12,543)	10" (25.40)	25" (63.50)	02207010
1.00"-1.24" (2.54-3.15)	4,280 (19,037)	12" (30.48)	28" (71.12)	02207011
1.25"-1.49" (3.17-3.78)	4,280 (19,037)	12" (30.48)	30" (76.20)	02207012
1.50"-1.99" (3.81-5.05)	4,280 (19,037)	12" (30.48)	34" (86.36)	02207013

Note: E-Eye length.
M-Mesh length at nominal diameter.
** Change catalog number from 022 to 024 for stainless steel. Consult factory for availability.*

CABLE SUPPORT DETAIL

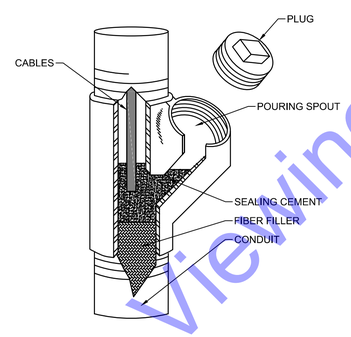

CONDUIT SEAL FITTING

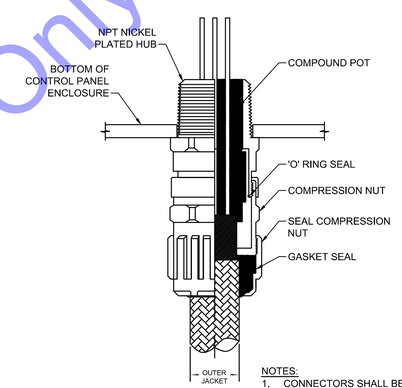

NOTES:

1. CONNECTORS SHALL BE HAWKE 710, OR EQUAL (CLASS 1, DIVISION 2 GROUP D HAZARDOUS LOCATION RATED).
2. PROVIDE SEALING WASHER FOR INGRESS PROTECTION WHERE SPECIFIED.

PUMP POWER AND CONTROL CABLE GLAND CONNECTION

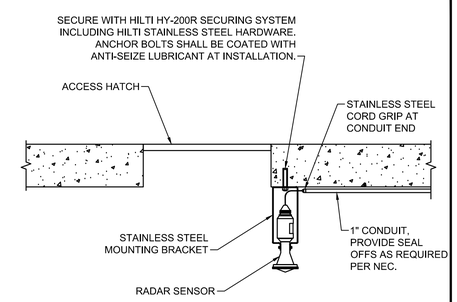

WET WELL RADAR MOUNTING DETAIL

NOT TO SCALE

COMMONWEALTH ENGINEERS, INC.
A wealth of resources to make a difference.
https://commonwealthengineers.com/

MICHAEL A. MIRANDE II
REGISTERED
No. 19800084
STATE OF INDIANA
PROFESSIONAL ENGINEER

Signature
07/08/2025
Date

CITY OF GARRETT, IN
DEKALB COUNTY

SR 8-CR 15
SANITARY SEWER AND WATER MAIN EXTENSION

Indiana 811
Know what's below. Call before you dig.
Know what's below. 811 before you dig.
1-800-382-5544
(ITS THE LAW)

No.	Submittal / Revision	By	Date

Designed By:	Drawn By:	Checked By:
CM	CM	MAM
Issue Date: 6/2025	Project No: S24214	Scale: AS SHOWN

ELECTRICAL DETAILS

Drawing No:
E3-0

Sheet: 26 OF 26

File: Z:\SHARED\IN CLIENTS A-L\GARRETT\24214 - SR 8 -CR 15 HOLLMAN PROJECT\06 CAD\K MECH-ELECT\24214-GARRETT-CR 15 LS-ELECTRICAL.DWG
Saved: 7/8/2025 10:55:07 AM Plotted: 7/8/2025 11:14:12 AM Current User: Chris Means LastSavedBy: cmeans