SET NO.

CITY OF KOKOMO
HOWARD COUNTY, INDIANA

NORTH SIDE INTERCEPTOR IMPROVEMENTS PROJECT
AUGUST 2025

For Public Viewing Only
Not For Downloading

BOARD OF PUBLIC WORKS

WESTON REED **PRESIDENT**	8/27/2025 **DATE :**
CORNELIA CAMPBELL **MEMBER**	8-27-2025 **DATE :**
T.J. RETHLAKE **MEMBER**	8-27-25 **DATE :**
SARAH WHITE **CLERK**	8-27-2025 **DATE :**

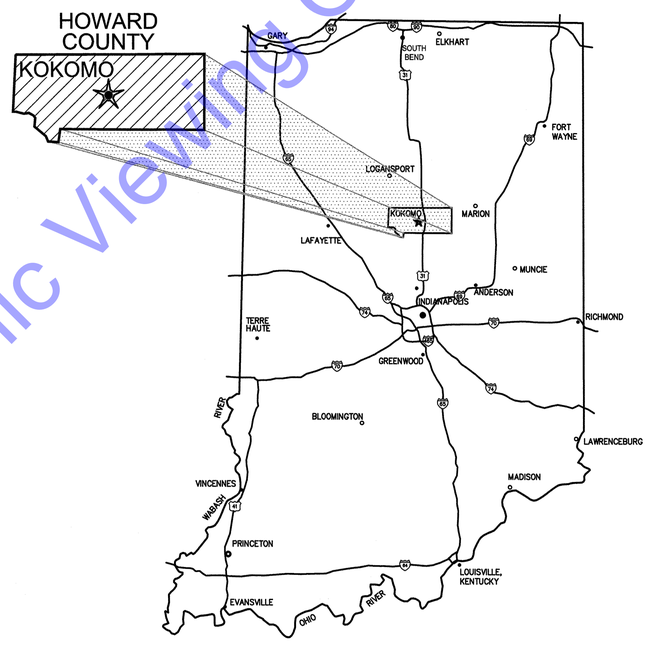

GENERAL LOCATION MAP

COMMONWEALTH ENGINEERS, INC.™
A wealth of resources to master a common goal.

QA/QC BY : JEREMY HARDY, PE — 8/15/2025 DATE :

CERTIFIED BY : Brian Wilson — 8/15/2025 DATE :
BRIAN WILSON
INDIANA PE No. 11900866

BRIAN KREED WILSON — REGISTERED — No. PE11900866 — STATE OF INDIANA — PROFESSIONAL ENGINEER

CONTRACT NO. : S21082

© 2025 BY COMMONWEALTH ENGINEERS, INC. ALL RIGHTS RESERVED. REPRODUCTION BY ANY METHOD IN WHOLE OR IN PART WITHOUT PERMISSION IS PROHIBITED

File: Z:\SHARED\IN CLIENTS A-L\KOKOMO\S21082 NORTH SIDE INTERCEPTOR DESIGN\06 CAD\A CURRENT FILES\1 DRAWINGS\01 - S21082 - TITLE SHEET.DWG
Saved: 8/6/2025 8:04:53 AM Plotted: 8/7/2025 4:24:40 PM Current User: Bryce Persinger LastSavedBy: bwaterman

INDEX TO SHEETS

SHEET #	DWG. #	DESCRIPTION
1	G1	TITLE SHEET
2	G2	INDEX TO SHEETS
3	G3	VICINITY MAP
4	G4	GENERAL NOTES, UTILITY COMPANIES & CONTACTS, EXISTING UTILITY NOTES
5	G5	GENERAL LOCATION PLAN
6	G6	SURVEY CONTROL SCHEDULE
7	G7	SURVEY CONTROL SCHEDULE
8	G8	STRUCTURE TABLES
9	G9	EXISTING INTERCEPTOR CLEANING PLAN
10	G10	EASEMENT PLAN
11	G11	EASEMENT PLAN
12	D1	DEMOLITION PLAN
13	D2	DEMOLITION PLAN
14	D3	DEMOLITION PLAN
15	D4	DEMOLITION PLAN
16	D5	DEMOLITION PLAN
17	D6	DEMOLITION PLAN
18	D7	DEMOLITION PLAN
19	D8	DEMOLITION PLAN
20	R1	RESTORATION PLAN
21	R2	RESTORATION PLAN
22	R3	RESTORATION PLAN
23	R4	RESTORATION PLAN
24	R5	RESTORATION PLAN
25	R6	RESTORATION PLAN
26	R7	RESTORATION PLAN
27	R8	RESTORATION PLAN
28	PP1	SANITARY SEWER PLAN & PROFILE - LINE 'A' - STATION 0+00-6+00
29	PP2	SANITARY SEWER PLAN & PROFILES - LINE 'A' - STATION 6+00-12+50
30	PP3	SANITARY SEWER PLAN & PROFILES - LINE 'A' - STATION 12+50-19+00; LINE 'D' - STATION 0+00-0+32
31	PP4	SANITARY SEWER PLAN & PROFILE - LINE 'A' - STATION 19+00-25+50
32	PP5	SANITARY SEWER PLAN & PROFILE - LINE 'A' - STATION 25+50-32+50
33	PP5A	MANDATORY ALTERNATE - SANITARY SEWER PLAN & PROFILE - LINE 'A' - STATION 25+50-32+50
34	PP6	SANITARY SEWER PLAN & PROFILE - LINE 'A' - STATION 32+50-39+50
35	PP6A	MANDATORY ALTERNATE - SANITARY SEWER PLAN & PROFILE - LINE 'A' - STATION 32+50-39+50
36	PP7	SANITARY SEWER PLAN & PROFILE - LINE 'A' - STATION 39+50-46+00
37	PP7A	MANDATORY ALTERNATE - SANITARY SEWER PLAN & PROFILE - LINE 'A' - STATION 39+50-46+00
38	PP8	SANITARY SEWER PLAN & PROFILE - LINE 'A' - STATION 46+00-51+00; LINE 'D-1' - STATION 0+00-0+37
39	PP9	SANITARY SEWER PLAN & PROFILE - LINE 'A' - STATION 51+00-57+00
40	PP10	SANITARY SEWER PLAN & PROFILE - LINE 'A' - STATION 57+00-62+00
41	PP11	SANITARY SEWER PLAN & PROFILE - LINE 'A' - STATION 62+00-66+97
42	PP12	SANITARY SEWER PLAN & PROFILE - LINE 'A-1' - STA. 0+00-2+34; LINE 'A-2' - STA. 0+00-0+44; LINE 'C' - STA. 0+00-0+24
43	SS1	STRUCTURE DETAILS - EXISTING STR. #105
44	SS2	STRUCTURE DETAILS - STR. #101
45	SS3	STRUCTURE DETAILS - STR. #102
46	SS4	STRUCTURE DETAILS - STR. #103
47	SS5	STRUCTURE DETAILS - STR. #104
48	SS6	STRUCTURE DETAILS - STR. #105
49	SS7	STRUCTURE DETAILS - STR. #106 AND #109
50	SS8	STRUCTURE DETAILS - STR. #107 AND #123
51	SS9	STRUCTURE DETAILS - STR. #108

INDEX TO SHEETS

SHEET #	DWG. #	DESCRIPTION
52	SS10	STRUCTURE DETAILS - STR. #110
53	SS11	STRUCTURE DETAILS - STR. #111 AND #112
54	SS12	STRUCTURE DETAILS - STR. #113 AND #114
55	SS13	STRUCTURE DETAILS - STR. #115
56	SS14	STRUCTURE DETAILS - STR. #116
57	SS15	STRUCTURE DETAILS - STR. #117 & #118
58	SS16	STRUCTURE DETAILS - EX. SAN MH 6547 & STR. #127
59	SS17	STRUCTURE DETAILS - STR. #119 & #120
60	SS18	STRUCTURE DETAILS - STR. #121
61	SS19	STRUCTURE DETAILS - STR. #124, #125 & #126
62	SS20	STRUCTURE DETAILS - EX. CSO 016
63	OF1	OUTFALL PLAN AND PROFILE AND DETAILS - NEW OUTFALL STRUCTURE #122
64	XS1	CREEKSTONE DRIVE - CROSS SECTION PLAN
65	XS2	KINGSTON ROAD, MCCANN SREET, & MAPLE STREET - CROSS SECTION PLANS
66	XS3	SUPERIOR STREET - CROSS SECTION PLANS
67	XS4	SUPERIOR SREET & WASHINGTON SREET - CROSS SECTION PLANS
68	XS5	CREEKSTONE DR CROSS SECTIONS
69	XS6	CREEKSTONE DR CROSS SECTIONS
70	XS7	CREEKSTONE DR CROSS SECTIONS
71	XS8	CREEKSTONE DR CROSS SECTIONS
72	XS9	CREEKSTONE DR CROSS SECTIONS
73	XS10	CREEKSTONE DR CROSS SECTIONS
74	XS11	KINGSTON RD CROSS SECTIONS
75	XS12	KINGSTON RD CROSS SECTIONS
76	XS13	MAPLE ST CROSS SECTIONS
77	XS14	MAPLE ST CROSS SECTIONS
78	XS15	MAPLE ST CROSS SECTIONS
79	XS16	MAPLE ST CROSS SECTIONS
80	XS17	CROSS SECTIONS - MCCANN ST
81	XS18	CROSS SECTIONS - SUPERIOR ST
82	XS19	CROSS SECTIONS - SUPERIOR ST
83	XS20	CROSS SECTIONS - SUPERIOR ST
84	XS21	CROSS SECTIONS - SUPERIOR ST
85	XS22	CROSS SECTIONS - SUPERIOR ST
86	XS23	CROSS SECTIONS - SUPERIOR ST
87	XS24	CROSS SECTIONS - SUPERIOR ST
88	XS25	CROSS SECTIONS - WASHINGTON ST
89	GR1	GRADING DETAILS - CREEKSTONE DR
90	GR2	GRADING DETAILS - CREEKSTONE DR
91	GR3	GRADING DETAILS - CREEKSTONE DR & KINGSTON RD
92	GR4	GRADING DETAILS - W MAPLE ST & W SUPERIOR ST
93	GR5	GRADING DETAILS - W SUPERIOR ST
94	GR6	GRADING DETAILS - W SUPERIOR ST & S WASHINGTON ST
95	MD1	MISCELLANEOUS DETAILS
96	MD2	MISCELLANEOUS DETAILS
97	SW1	SWPP PLAN
98	SW2	SWPP PLAN
99	EC1	EROSION CONTROL PLAN
100	EC2	EROSION CONTROL PLAN
101	EC3	EROSION CONTROL PLAN
102	EC4	EROSION CONTROL PLAN
103	EC5	EROSION CONTROL PLAN
104	EC6	EROSION CONTROL PLAN
105	EC7	EROSION CONTROL PLAN
106	EC8	EROSION CONTROL PLAN

INDEX TO SHEETS

SHEET #	DWG. #	DESCRIPTION
107	EC9	EROSION CONTROL PLAN
108	EC10	EROSION CONTROL PLAN
109	EC11	EROSION CONTROL PLAN
110	EC12	EROSION CONTROL PLAN
111	EC13	EROSION CONTROL DETAILS
112	MOT1	MAINTENANCE OF TRAFFIC - PHASE 1
113	MOT2	MAINTENANCE OF TRAFFIC - PHASE 2
114	MOT3	MAINTENANCE OF TRAFFIC - PHASE 2
115	MOT4	MAINTENANCE OF TRAFFIC - PHASE 3
116	MOT5	MAINTENANCE OF TRAFFIC - PHASE 3
117	MOT6	MAINTENANCE OF TRAFFIC - PHASE 4
118	MOT7	MAINTENANCE OF TRAFFIC - PHASE 4
119	MOT8	MAINTENANCE OF TRAFFIC - PHASE 4
120	MOT9	MAINTENANCE OF TRAFFIC - PHASE 5
121	MOT10	MAINTENANCE OF TRAFFIC - PHASE 5 AND PHASE 6
122	MOT11	MAINTENANCE OF TRAFFIC
123	MOT12	MAINTENANCE OF TRAFFIC
124	MOT13	MAINTENANCE OF TRAFFIC
125	S1-1	GENERAL STRUCTURAL NOTES
126	S1-2	TYPICAL STRUCTURAL DETAILS - CONCRETE
127	S2-1	STRUCTURE 112 FOUNDATION AND UPPER SLAB PLAN
128	S2-2	STRUCTURE 112 UPPER LEVEL PLAN
129	S3-1	STRUCTURE 122 FOUNDATION AND UPPER SLAB PLAN
130	S3-2	STRUCTURE 122 SECTIONS AND DETAILS
131	S4-1	STRUCTURE 107 FOUNDATION AND UPPER SLAB PLAN
132	S4-2	STRUCTURE 107 SECTIONS AND DETAILS
133	S5-1	STRUCTURE 108 FOUNDATION AND UPPER SLAB PLAN
134	S5-2	STRUCTURE 108 SECTIONS AND DETAILS
135	GTI	TYPICAL SECTIONS AND TUNNEL NOTES
136	GT2	GEOTECHNICAL PLAN
137	GT3	GEOTECHNICAL DETAILS

For Public Viewing Only-Not For Downloading

COMMONWEALTH ENGINEERS, INC.
A wealth of resources to master a common goal.
https://commonwealthengineers.com/

BRIAN KREED WILSON
REGISTERED
No. PE11900866
STATE OF INDIANA
PROFESSIONAL ENGINEER

Brian Wilson
Signature

8/15/2025
Date

CITY OF KOKOMO, INDIANA
HOWARD COUNTY

NORTH SIDE INTERCEPTOR
IMPROVEMENTS PROJECT

© 2025 BY COMMONWEALTH ENGINEERS, INC. ALL RIGHTS RESERVED. REPRODUCTION BY ANY METHOD IN WHOLE OR IN PART WITHOUT PERMISSION IS PROHIBITED

Indiana 811
Know what's below. Call before you dig.
Know what's below. 811 before you dig.
1-800-382-5544
(ITS THE LAW)

No.	Submittal / Revision	By	Date

Designed By:	Drawn By:	Checked By:
BW	BW/CH/EK	JH
Issue Date:	Project No:	Scale:
8/2025	S21082	AS SHOWN

INDEX TO SHEETS

Drawing No:
G2
Sheet: 2 OF 137

File: Z:\SHARED\IN CLIENTS A-L\KOKOMO\S21082 NORTH SIDE INTERCEPTOR DESIGN\06 CAD\A CURRENT FILES\1 DRAWINGS\02 - S21082 - VICINITY MAP AND INDEX TO SHEETS.DWG
Saved: 8/7/2025 3:06:55 PM Plotted: 8/7/2025 4:24:46 PM Current User: Bryce Persinger LastSavedBy: bpersinger



VICINITY MAP
SCALE: 1"=400'-0"

SCALE: 1"=400'
400' 0 400'

For Public Viewing Only-Not For Downloading

COMMONWEALTH ENGINEERS, INC.
A wealth of resources to master a common goal.
https://commonwealthengineers.com/

BRIAN KREED WILSON
REGISTERED
No. PE11900866
STATE OF INDIANA
PROFESSIONAL ENGINEER

Signature 8/15/2025 Date

CITY OF KOKOMO, INDIANA
HOWARD COUNTY

NORTH SIDE INTERCEPTOR
IMPROVEMENTS PROJECT

© 2025 BY COMMONWEALTH ENGINEERS, INC. ALL RIGHTS RESERVED. REPRODUCTION BY ANY METHOD IN WHOLE OR IN PART WITHOUT PERMISSION IS PROHIBITED

Indiana 811 Know what's below. Call before you dig.
Know what's below. 811 before you dig.
1-800-382-5544 (ITS THE LAW)

No.	Submittal / Revision	By	Date

Designed By:	Drawn By:	Checked By:
BW	BW/CH/EK	JH
Issue Date: 8/2025	Project No: S21082	Scale: AS SHOWN

VICINITY MAP

Drawing No: G3

Sheet: 3 OF 137

File: Z:\SHARED\IN CLIENTS A-L\KOKOMO\S21082 NORTH SIDE INTERCEPTOR DESIGN\06 CAD\A CURRENT FILES\1 DRAWINGS\02 - S21082 - VICINITY MAP AND INDEX TO SHEETS.DWG
Saved: 8/7/2025 3:06:55 PM Plotted: 8/7/2025 4:25:05 PM Current User: Bryce Persinger LastSavedBy: bpersinger

DEMOLITION KEY NOTES

- D1 — CUT EXISTING ASPHALT ALONG THIS LINE TO ACCOMMODATE INSTALLATION OF NEW PAVEMENT AGAINST EXISTING PAVEMENT.
- D2 — REMOVE ASPHALT PAVEMENT/DRIVE/PARKING LOT/PATHWAY.
- D3 — REMOVE CONCRETE PAVEMENT DRIVEWAY.
- D4 — REMOVE CONCRETE WALK TO NEAREST JOINT.
- D5 — CUT AND PLUG EXISTING SANITARY SEWER AT THIS LOCATION.
- D6 — IF ABANDONING, CUT STRUCTURE 5' BELOW GROUND AND FILL WITH FLOWABLE FILL. IF REMOVING, DISPOSE OF LAWFULLY AND PLUG INCOMING PIPES (APPROXIMATE LOCATION SHOWN - VERIFY IN FIELD) - SEE SPECIFICATIONS.
- D7 — REMOVE EXISTING SANITARY SEWER AND DISPOSE OF LAWFULLY.
- D8 — REMOVE EXISTING VEGETATION/LANDSCAPING AS REQUIRED FOR INSTALLATION OF IMPROVEMENTS.
- D9 — REMOVE CURB TO NEAREST JOINT.
- D10 — CLEAR AND REMOVE EXISTING TREES AS NEEDED. SEE SPECIFICATIONS FOR TREE REMOVAL AND REPLACEMENT REQUIREMENTS.
- D11 — EXISTING STORM STRUCTURE TO BE REMOVED & REPLACED AS PART OF CONSTRUCTION ACTIVITIES.
- D12 — REMOVE AND REPLACE EXISTING STORM SEWER PIPE AND DISPOSE OF LAWFULLY.
- D13 — EXISTING HOUSE SHALL BE DEMOLISHED BY CONTRACTOR PRIOR TO CONSTRUCTION OF LINE 'A'. SITE TO BE CLEARED OF ALL DEBRIS AND DISPOSED OF LAWFULLY BEFORE CONSTRUCTION OF LINE 'A'
- D14 — CONTRACTOR TO REMOVE AND STORE EXISTING PARKING BLOCKS PRIOR TO CONSTRUCTION AS NEEDED.
- D15 — EXISTING LIGHT POLE TO BE REMOVED AND REPLACED AS PART OF CONSTRUCTION ACTIVITIES AS NEEDED.
- D16 — EXISTING CROSS WALK POST TO BE REMOVED AND REPLACED AS PART OF CONSTRUCTION ACTIVITIES AS NEEDED.
- D17 — EXISTING GUARDRAIL TO BE REMOVED AND REPLACED AS PART OF CONSTRUCTION ACTIVITIES AS NEEDED.
- D18 — EXISTING BENCH TO BE REMOVED AND REPLACED AS PART OF CONSTRUCTION ACTIVITIES AS NEEDED.
- D19 — CONTRACTOR TO SUPPORT/REMOVE/RELOCATE EXISTING POWER POLES WITH GUIDANCE OF THE POWER COMPANY AS NEEDED.
- D20 — EXISTING SIGN REMOVED AND REPLACED AS PART OF CONSTRUCTION ACTIVITIES AS NEEDED.
- D21 — IF BRICK/RETAINING WALL IS DISTURBED, CONTRACTOR TO REPLACE AS NEEDED AND APPROVED BY ENGINEER AND OWNER.
- D22 — EXISTING TELEPHONE/ FIBER BOXES TO BE RELOCATED WITH GUIDANCE FROM UTILITY'S COMPANY AS NEEDED.
- D23 — REMOVE EXISTING ADA RAMPS AS NEEDED.
- D24 — CONTRACTOR TO REMOVE AND RELOCATE CSO 022 SIGN TO NEW LOCATION.

  CONTRACTOR TO REMOVE BUS STOP BENCH, STRUCTURE, CURB, SIDEWALK AND ADA RAMP AS NEEDED.
- D26 — CONTRACTOR TO REMOVE AND REPLACE TRAFFIC SIGNAL ITEMS AS NEEDED FOR INTERCEPTOR INSTALLATION INCLUDING, BUT NOT LIMITED TO, TRAFFIC SIGNAL LOOPS, CONDUIT, DETECTOR HOUSINGS, AND WIRING NECESSARY TO RECONNECT THE VEHICLE LOOP DETECTION.

RESTORATION KEY NOTES

- R1 — RESURFACE ASPHALT STREET/DRIVE/PARKING LOT/ PATHWAY WITH 1-1/2" OF HMA SURFACE, TYPE B, 12.5 MM. PROVIDE STRIPING/MARKINGS TO MATCH EXISTING WHERE STRIPING/MARKINGS ARE CURRENTLY PROVIDED.
- R2 — REPLACE CONCRETE PAVEMENT DRIVEWAY.
- R3 — REPLACE CONCRETE WALK TO NEAREST JOINT.
- R4 — PLUG EXISTING SANITARY SEWER PIPE AND FILL WITH FLOWABLE FILL AND ABANDON IN PLACE.
- R5 — REPLACE EXISTING VEGETATION/LANDSCAPING TO EQUAL OR BETTER AS REQUIRED FOR INSTALLATION OF IMPROVEMENTS.
- R6 — CONTRACTOR SHALL PROVIDE FINAL GRADING AND SEEDING FOR ALL GRASSED AREAS DISTURBED DURING CONSTRUCTION TO EQUAL OR BETTER CONDITION AS APPROVED BY OWNER.
- R7 — REPLACE CURB TO NEAREST JOINT.
- R8 — CORE EXISTING STRUCTURE TO CONNECT NEW PIPE. SEE SS DRAWINGS, STRUCTURE INFORMATION, AND SPECIFICATION FOR PIPE SIZE, INVERT, AND CONNECTION REQUIREMENTS.
- R9 — REPLACE EXISTING TREES THAT HAVE BEEN REMOVED. SEE SPECIFICATIONS FOR TREE REMOVAL AND REPLACEMENT REQUIREMENTS.
- R10 — CONTRACTOR SHALL REPAIR EXISTING ASPHALT DRIVE TO ORIGINAL OR BETTER CONDITION IF DAMAGED DURING CONSTRUCTION.
- R11 — CONSTRUCT OR REPLACE ADA RAMPS AS NEEDED (SEE DWG. GR3).
- R12 — REPLACE EXISTING PARKING BLOCKS TO THEIR ORIGINAL POSITION AFTER CONSTRUCTION IS COMPLETE. ANY DAMAGED PARKING BLOCKS SHALL BE REPLACED AT THE CONTRACTOR'S EXPENSE.
- R13 — CONTRACTOR TO PROTECT/REPLACE RETAINING WALL AS NEEDED FOR NEW CURB/WALK TO BE INSTALLED.
- R14 — REPLACE EXISTING STORM STRUCTURE.
- R15 — CONTRACTOR TO REPLACE LIGHT POLE IN KIND AS NEEDED.
- R16 — CONTRACTOR TO REPLACE CROSS WALK POST IN KIND AS NEEDED.
- R17 — CONTRACTOR TO REPLACE GUARDRAIL IN KIND AS NEEDED.
- R18 — CONTRACTOR TO REPLACE BENCH IN KIND AS NEEDED.
- R19 — CONTRACTOR TO REPLACE SIGN IN KIND AS NEEDED.
- R20 — IF BRICK WALL IS DISTURBED, CONTRACTOR TO REPLACE AS NEEDED AND APPROVED BY ENGINEER AND OWNER.
- R21 — CONTRACTOR TO SUPPORT/REMOVE/RELOCATE EXISTING POWER POLES WITH GUIDANCE OF THE POWER COMPANY AS NEEDED.
- R22 — EXISTING TELEPHONE/ FIBER BOXES TO BE RELOCATED WITH GUIDANCE FROM UTILITY'S COMPANY AS NEEDED.
- R23 — CONTRACTOR TO REMOVE AND RELOCATE CSO 022 SIGN TO NEW LOCATION.
- R24 — CONTRACTOR TO REPLACE BUS STOP BENCH, STRUCTURE, CURB, SIDEWALK AND ADA RAMP AS NEEDED.
- R25 — CONTRACTOR TO REMOVE AND REPLACE TRAFFIC SIGNAL ITEMS AS NEEDED FOR INTERCEPTOR INSTALLATION INCLUDING, BUT NOT LIMITED TO, TRAFFIC SIGNAL LOOPS, CONDUIT, DETECTOR HOUSINGS, AND WIRING NECESSARY TO RECONNECT THE VEHICLE LOOP DETECTION.

UTILITY CONTACTS:

NATURAL GAS SERVICE
NIPSCO
900 E BOULEVARD ST.
KOKOMO, IN 46901
ATTN: KYLIE BARON
(260) 446-8850
(800) 634-3524 (EMERGENCY)
kbaron@nisource.com

SANITARY
WASTEWATER TREATMENT PLANT
100 S. UNION ST. 1st FLOOR
KOKOMO, IN 46901
(765) 456-3263
www.cityofkokomo.org

CABLE TV
COMCAST
9750 EAST 150 STREET - SUITE 1600
NOBLESVILLE, IN
CONTACT: JOSHUA WHITLOW
(317) 716-1380
Joshua_Whitlow@comcast.com

PUBLIC MAINTENANCE AND REFUSE
CITY OF KOKOMO PUBLIC MAINTENANCE AND REFUSE
(765) 453-4030
www.cityofkokomo.org

TELEPHONE
AT&T DISTRIBUTION
116 EAST TAYLOR STREET
KOKOMO, IN 46901
CONTACT: DAVID W. SMITH
(765) 454-5021
ds8383@att.com.com

ELECTRICAL
DUKE ENERGY
100 S MILL CREEK RD.
NOBLESVILLE, IN 46062
CONTACT: BRYNN STREETER
Brynn.Streeter@duke-energy.com
(317) 703-0681
www.duke-energy.com

INTERNET
WINDSTREAM
SHAWN RILEY
(821) 461-7450

FIBER OPTIC
ZAYO BANDWIDTH
WAYLON HIGGINS
(765) 341-1199

FIBER OPTIC
METRO FIBERNET
3701 COMMUNICATINS WAY
EVANSVILLE, IN 47715
CONTACT: LORI KEMPER
(812) 213-1050

WATER
INDIANA AMERICAN WATER CO.
1700 E SUPERIOR
KOKOMO, IN 46901
CONTACT: DAWN BECK
(765) 454-6982
dawn.beck@amwater.com

HOWARD COUNTY HIGHWAY DEPARTMENT
AMBER TOLLE, P.E.
(765) 456-2802 EXT. 3246

EROSION CONTROL LEGEND

- SF — SILT FENCE
- EB — EROSION CONTROL BLANKET
- IP — INLET PROTECTION
- PS — PERMANENT SEEDING

EXISTING UTILITY NOTES

1. THE EXISTING UTILITY INFORMATION SHOWN ON THESE DRAWINGS CONCERNING TYPE AND LOCATION OF UNDERGROUND UTILITIES IS NOT GUARANTEED TO BE ACCURATE OR ALL-INCLUSIVE. LOCATION, SIZE AND MATERIAL SHOWN ON UTILITIES ARE FROM AVAILABLE RECORDS AND AVAILABLE FIELD MARKINGS, SUPPLIED BY THE RESPECTIVE UTILITY COMPANY. THE INDIANA UNDERGROUND PLANT PROTECTION SERVICE (IUPPS) MUST BE NOTIFIED 48 HOURS PRIOR TO ANY EXCAVATION FOR VERIFICATION OF LOCATION, SIZE AND MATERIAL FOR EXISTING UNDERGROUND UTILITIES (1-800-382-5544).
2. SIZE, MATERIAL, DEPTH AND LOCATION OF KNOWN EXISTING SEWER FACILITIES ARE FROM AVAILABLE HISTORIC INFORMATION AND ABOVE-GROUND INSPECTION AND MEASUREMENT. THE CONTRACTOR SHALL VERIFY ALL SEWER INFORMATION CONTAINED IN THE CONTRACT DOCUMENTS PRIOR TO ANY CONSTRUCTION WHICH WOULD BE IMPACTED BY FACILITIES NOT LOCATED AS SHOWN IN THE CONTRACT DOCUMENTS. THE COST TO CORRECT ANY FACILITIES INSTALLED PRIOR TO VERIFICATION OF EXISTING CONDITIONS BY THE CONTRACTOR SHALL BE AT NO COST TO THE OWNER OR ENGINEER, DIFFERING CONDITIONS DISCOVERED DURING VERIFICATION WILL BE HANDLED PER THE CONTRACT DOCUMENTS.
3. THE LOCATIONS OF UTILITIES AND STRUCTURES, BOTH SURFACE AND SUBSURFACE, ARE SHOWN ON THE PLANS FROM DATA AVAILABLE AT THE TIME OF SURVEY AND ARE NOT NECESSARILY COMPLETE OR CORRECT. DETERMINING THE EXACT LOCATION AND PROTECTING UTILITIES AND STRUCTURES ARE THE RESPONSIBILITY OF THE CONTRACTOR. DURING CONSTRUCTION, THE CONTRACTOR SHALL PROTECT ALL EXISTING UTILITIES AND STRUCTURES WHETHER SHOWN ON THE PLANS OR NOT. IF DAMAGE IS CAUSED, THE CONTRACTOR SHALL BE RESPONSIBLE FOR THE REPAIR AND RESTORATION OF SAME IN ACCORDANCE WITH THE REQUIREMENTS OF THE UTILITY OWNER AND FOR ANY RESULTING CONTINGENT DAMAGE AND COST.
4. IF UTILITY FACILITIES OTHER THAN THOSE SHOWN ARE LOCATED, OR IF UTILITIES ARE LOCATED WHICH ARE NOT IN ACCORDANCE WITH THE LOCATIONS SHOWN ON THE DRAWINGS, THE ENGINEER SHALL BE NOTIFIED TO DETERMINE IF PLAN REVISIONS ARE NEEDED.
5. ALL EXISTING UTILITIES SHOWN IN PROFILE ARE INDICATED AT THEIR ASSUMED ELEVATION. CONTRACTOR TO FIELD VERIFY PRIOR TO CONSTRUCTION.
6. IN GENERAL, UTILITY SERVICE LINES TO INDIVIDUAL CUSTOMERS ARE NOT SHOWN ON THE PLANS. CONTRACTOR SHALL ASSUME THAT UNDERGROUND SERVICE LINES EXIST TO EACH PROPERTY ALONG THE NEW SEWER ROUTE FOR WATER, SANITARY SEWER, GAS, ELECTRIC, TELEPHONE, AND FIBER OPTIC, THE CONTRACTOR SHALL LOCATE, PROTECT, AND IF DAMAGED BY CONTRACTOR, REPAIR ALL UTILITY SERVICE LINES ENCOUNTERED.
7. IT SHALL BE THE CONTRACTOR'S RESPONSIBILITY TO MAINTAIN IN SERVICE ALL EXISTING UTILITIES ENCOUNTERED DURING CONSTRUCTION UNLESS OTHERWISE INDICATED IN THE DRAWINGS. ANY UTILITY WHICH CAN BE REMOVED DURING CONSTRUCTION WITHOUT UNDUE INTERRUPTION OF SERVICE MAY BE REMOVED AND REPLACED BY THE CONTRACTOR WITH THE PERMISSION OF THE OWNER AND THE APPLICABLE UTILITY OWNER.
8. THE CONTRACTOR SHALL BE RESPONSIBLE FOR REPAIR/REPLACEMENT TO ALL DAMAGED WATER SERVICES. CONTRACTOR MUST NOTIFY WATER MAINTENANCE AND SERVICE DISPATCHER OF ANY DAMAGES TO THE WATER FACILITIES. DAMAGED WATER FACILITIES MUST BE REPAIRED BY THE CONTRACTOR WITHIN TWO (2) HOURS AT NO ADDITIONAL COST TO THE OWNER. IF WATER MAINTENANCE IS REQUIRED TO MAKE REPAIRS, THE CONTRACTOR WILL BE BILLED. WATER MAIN REPLACEMENT SHALL BE COORDINATED WITH INDIANA AMERICAN WATER CO. IF AN EMERGENCY REPAIR TO A WATER MAIN IS NEEDED, THE CONTRATOR SHALL COORDINATE WITH INDIANA AMERICAN WATER CO., AND REPAIRS SHALL BE COMPLETED IN ACCORDANCE WITH THEIR REQUIREMENTS.
9. THE CONTRACTOR SHALL PROTECT ALL POWER POLES FROM DAMAGE ASSOCIATED WITH CONSTRUCTION ACTIVITIES, WHERE REQUIRED, ALL UTILITY POLES ARE TO BE SUPPORTED IN A MANNER APPROVED BY THE APPROPRIATE UTILITY DURING INSTALLATION OF SEWER PIPE. ALL COSTS ASSOCIATED WITH MAINTAINING UTILITY SERVICE SHALL BE THE RESPONSIBILITY OF THE CONTRACTOR. ALL COSTS ASSOCIATED WITH THE PROTECTION AND/OR TEMPORARY SUPPORT OF UTILITY POLES SHALL BE THE RESPONSIBILITY OF THE CONTRACTOR.
10. THE CONTRACTOR SHALL MAKE PROVISIONS TO MAINTAIN FLOWS IN SEWERS AT ALL TIMES, BYPASS PUMPING OR ALTERNATE PROVISIONS MAY BE REQUIRED AND SHALL BE SUFFICIENT TO CONVEY FLOWS UNDER ALL CONDITIONS. ALL COSTS ASSOCIATED WITH MAINTAINING SAID FLOWS SHALL BE THE RESPONSIBILITY OF THE CONTRACTOR.
11. EXISTING UTILITY INFORMATION SHOWN IN DRAWINGS, MEETS "ASCE 38-02" QUALITY LEVEL C, UNLESS OTHERWISE NOTED.

    UTILITY QUALITY LEVEL A: PRECISE HORIZONTAL AND VERTICAL LOCATION OF UTILITIES OBTAINED BY THE ACTUAL EXPOSURE (OR) VERIFICATION OF PREVIOUSLY EXPOSED AND SURVEYED UTILITIES) AND SUBSEQUENT MEASUREMENT OF SUBSURFACE UTILITIES, USUALLY AT A SPECIFIC POINT, ACCURACY OF LOCATION MATCHES PROJECT SURVEY TOLERANCE.

    UTILITY QUALITY LEVEL B: INFORMATION OBTAINED THROUGH THE APPLICATION OF APPROPRIATE SURFACE GEOPHYSICAL METHODS TO DETERMINE THE EXISTENCE AND APPROXIMATE HORIZONTAL POSITION SUBSURFACE UTILITIES. THE RELIABILITY OF THIS INFORMATION IS SURVEYED TO PROJECT CONTROL AND SUBJECT TO ACCURACY LEVELS OF THE GEOPHYSICAL TOLERANCE DEFINED BY THE PROJECT.

    UTILITY LEVEL C: INFORMATION OBTAINED BY SURVEYING AND PLOTTING VISIBLE ABOVE-GROUND UTILITY FEATURES AND CORRELATING QUALITY LEVEL D INFORMATION.

    UTILITY LEVEL D: INFORMATION DERIVED FROM EXISTING RECORDS OF VERBAL RECOLLECTIONS.
12. NORTHING AND EASTING COORDINATES SHOWN ON ALL EXISTING MANHOLES, INLETS, ETC. ARE SHOWN FROM CENTER OF STRUCTURE, NOT CASTING, UNLESS OTHERWISE NOTED.

GENERAL NOTES

1. IF ANY ERRORS OR DISCREPANCIES BECOME APPARENT, THEY SHALL BE BROUGHT TO THE ATTENTION OF THE ENGINEER PRIOR TO CONSTRUCTION SO THAT CLARIFICATION OR REDESIGN MAY OCCUR.
2. LIMITS OF CONSTRUCTION SHALL BE WITHIN EXISTING RIGHT-OF-WAYS UNLESS OTHERWISE NOTED.
3. FOR AREAS OUTSIDE OF EXISTING RIGHT-OF-WAYS, THE CONTRACTOR SHALL CONFINE ALL WORK TO THE LIMITS OF PERMANENT AND TEMPORARY EASEMENTS OR CONSTRUCTION LIMIT BOUNDARIES AS SHOWN ON THE DRAWINGS.
4. THE CONTRACTOR SHALL BE RESPONSIBLE FOR SECURING, AT NO ADDITIONAL COST TO THE OWNER, TEMPORARY EASEMENTS NEEDED FOR STORAGE, STOCKPILING, ACCESS, OR ANY OTHER REASON, OUTSIDE OF ANY EASEMENTS OR RIGHT-OF-WAY PROVIDED.
5. THE CONTRACTOR SHALL COORDINATE THE ACTIVITIES OF THEIR PERSONNEL, SUBCONTRACTORS, AND UTILITIES PERFORMING WORK ON THIS PROJECT. THE CONTRACTOR SHALL ALSO COORDINATE WITH THE OWNER'S OPERATIONS AND MAINTENANCE PERSONNEL WHO MAY BE WORKING IN OR NEAR THE PROJECT AREA.
6. THE CONTRACTOR IS SOLELY AND COMPLETELY RESPONSIBLE FOR JOB SITE CONDITIONS DURING THE COURSE OF CONSTRUCTION OF THIS PROJECT, INCLUDING EROSION CONTROL AND THE SAFETY OF ALL PERSONS AND PROPERTY. THIS REQUIREMENT SHALL APPLY CONTINUOUSLY AND NOT BE LIMITED TO NORMAL WORKING HOURS, AND THE CONTRACTOR SHALL DEFEND, INDEMNIFY AND HOLD THE OWNER AND THE ENGINEER HARMLESS FROM ALL LIABILITY, REAL OR ALLEGED, IN CONNECTION WITH THE PERFORMANCE OR WORK ON THE PROJECT.
7. THE CONTRACTOR SHALL BE RESPONSIBLE FOR ALL LINES, GRADES AND ELEVATIONS. ALL PIPES SHALL SLOPE UNIFORMLY BETWEEN INVERT ELEVATIONS SHOWN.
8. IT IS THE RESPONSIBILITY OF THE CONTRACTOR TO REMOVE ALL MUD, DIRT, GRAVEL, AND ANY OTHER MATERIALS TRACKED ONTO ANY PUBLIC OR PRIVATE STREETS, PARKING LOTS, OR WALKS. THIS MATERIAL REMOVAL OR SWEEPING OF THE STREETS SHALL BE DONE AS FREQUENTLY AS NECESSARY TO MAINTAIN REASONABLY CLEAN AREAS. THE CONTRACTOR SHALL ALSO CONTROL DUST THROUGH THE USE OF WATERING, APPLICATION OF DUST PALLIATIVE, OR OTHER APPROVED METHODS. NO DIRECT PAYMENT WILL BE MADE FOR ANY SUCH CLEANING WORK OR DUST CONTROL.
9. EXISTING SIGNS TO BE REMOVED AND RESET AFTER CONSTRUCTION SHALL BE COORDINATED WITH THE CITY OF KOKOMO.
10. THE CONTRACTOR SHALL COMPLY WITH THE REQUIREMENTS OF ALL PERMITS OBTAINED FOR THE PROJECT.
11. THE COST OF ABIDING BY THE PROVISIONS OR PERMITS ISSUED BY VARIOUS AGENCIES SHALL BE CONSIDERED INCIDENTAL TO THE CONTRACT. ALL ASSOCIATED BONDING REQUIREMENTS AND COSTS SHALL ALSO BE CONSIDERED INCIDENTAL TO THE CONTRACT.
12. THE CONTRACTOR SHALL PRESERVE AND PROTECT PROPERTY MARKERS, SECTION CORNERS, SURVEY MARKS AND BENCHMARKS, SUCH AS STONES, PIPES, OR OTHER MONUMENTS ENCOUNTERED, IF THE CONTRACTOR MUST DISTURB THE PROPERTY MARKERS OR MONUMENTS, THEIR HORIZONTAL AND VERTICAL LOCATION SHALL BE DETERMINED AND RECORDED BY A REGISTERED LAND SURVEYOR AND THE OWNER NOTIFIED BEFORE DISTURBING. ALL PROPERTY MARKERS AND MONUMENTS DISTURBED DURING CONSTRUCTION SHALL BE RE-ESTABLISHED BY A REGISTERED LAND SURVEYOR TO FINAL COMPLETION.
13. ROADWAY SURFACING AND BASE MATERIALS OR OTHER PROPERTY REMOVED OR DAMAGED, SHALL BE REPLACED OR REPAIRED AS PROVIDED FOR IN THE CONTRACT DOCUMENTS.
14. REGRADE AREAS AS NECESSARY WITHIN THE CONSTRUCTION LIMITS TO ALLOW PROPER DRAINAGE TO EXISTING STORM SEWER STRUCTURES. ANY EXCESS SOIL AND SPOIL MATERIAL SHALL BE DISPOSED OF BY THE CONTRACTOR OFF-SITE.
15. WORK NOT SPECIFIED FOR PAYMENT AS OR PART OF A SPECIFIC PAY ITEM SHALL BE CONSIDERED INCIDENTAL TO THE CONTRACT BY THE CONTRACTOR.
16. COORDINATION AND PROPER FIT AND SURVEY OF ALL PROJECT ELEMENTS ARE THE RESPONSIBILITY OF THE CONTRACTOR. CONTRACTOR SHALL CONDUCT A PRE-CONSTRUCTION STAKEOUT OF THE PROJECT ELEMENTS TO VERIFY THE COORDINATES PROVIDED.
17. THE CONTRACTOR SHALL VERIFY ALL RIM ELEVATIONS OF PROPOSED STRUCTURES PRIOR TO ORDERING ANY MATERIALS.
18. CONTRACTOR SHALL REFER TO GEOTECHNICAL REPORT IN CONTRACT DOCUMENTS FOR BORING LOCATIONS AND LOGS.
19. ALL NORTHINGS AND EASTINGS PROVIDED FOR NEW STRUCTURES ARE DESIGNATED TO THE CENTER OF THE STRUCTURE.
20. ADDITIONAL ACCESS ROAD OUTSIDE OF WHAT IS SHOWN ON DRAWINGS SHALL BE INCIDENTAL TO OTHER PAY ITEMS.
21. CONTRACTOR TO MAINTAIN 10'-0" HORIZONTAL AND 1'-6" VERTICAL SEPARATION BETWEEN SANITARY SEWERS/SANITARY LATERALS AND WATER MAINS/SERVICE LATERALS IN ACCORDANCE WITH IDEM REQUIREMENTS AND INDIANA ADMINISTRATIVE CODE. MANHOLES AND WATER MAINS/SERVICE LATERALS SHALL HAVE MINIMUM 8'-0" SEPARATION. WHERE SEPARATION DISTANCES CAN NOT BE MAINTAINED, PRESSURE RATED SEWER PIPE AND APPROPRIATELY LINED MANHOLES SHALL BE UTILIZED IN ACCORDANCE WITH THE SEPARATIONS. SEWER SHALL HAVE PIPE JOINTS LOCATED AS FAR AS POSSIBLE FROM THE WATER MAIN (ONE FULL SEWER PIPE LENGTH CENTERED AT WATER MAIN).

LEGEND

- NEW TEMPORARY EASEMENT (PLAN ONLY)
- NEW PERMANENT EASMENT (PLAN ONLY)
- GRANULAR BACKFILL (PROFILES AND SECTIONS ONLY)
- ASPHALT (PROFILES AND SECTIONS ONLY)
- ABANDONED IN PLACE (PLAN ONLY)
- STONE DRIVE (PLAN) GROUT (PROFILES AND SECTIONS)
- CONCRETE
- RIP-RAP (PLAN ONLY)
- GRASS (PROFILE ONLY)
- NEW SANITARY STRUCTURES
- NEW SANITARY SEWER
- NEW STORM STRUCTURE
- NEW STORM SEWER
- EXISTING STORM/SANITARY MANHOLE
- EXSN — EXISTING SANITARY SEWER
- EXISTING SANITARY SEWER TO BE PLUGGED
- EXISTING SANITARY SEWER TO BE ABANDONED/FILLED
- EXISTING SANITARY SEWER TO BE REMOVED
- EXISTING STORM STRUCTURE
- EXST — EXISTING STORM SEWER
- EXISTING STORM SEWER TO BE PLUGGED
- EXISTING STORM SEWER TO BE ABANDONED/FILLED
- EXISTING STORM SEWER TO BE REMOVED
- EXISTING WATER MAIN (BY OTHERS)
- EXW — EXISTING WATER MAIN
- EXISTING FIRE HYDRANT
- EXISTING WATER VALVE
- EXISTING WATER METER
- EXISTING TRAFFIC MANHOLE
- EXISTING GAS METER
- EXFO — EXISTING FIBER OPTICS
- EXISTING FIBER OPTICS BOX
- EXISTING ELECTRIC TRANSFORMER BOX
- EXISTING MAILBOX
- EXISTING SIGN
- EXISTING POST
- X — X — EXISTING FENCE
- EXISTING GUARDRAIL
- EXISTING DECIDUOUS TREE
- EXISTING EVERGREEN TREE
- EXISTING SHRUB/BUSH
- EXISTING TREE LINE
- 890 — EXISTING MAJOR CONTOUR LINE
- EXISTING MINOR CONTOUR LINE
- RW — APPROX. RIGHT-OF-WAY
- APP. PL — APPARENT PROPERTY LINE
- ESMT — EXISTING EASEMENT
- EXG — EXISTING GAS LINE
- EXISTING GAS VALVE
- EXISTING LIGHT POLE
- EXISTING UTILITY POLE W/ GUY WIRE
- EXOHE — EXISTING OVERHEAD ELECTRIC
- EXBT — EXISTING BURIED TELEPHONE
- EXBE — EXISTING BURIED ELECTRIC
- TP — EXISTING TELEPHONE PEDESTAL
- EDGE OF DRIVE
- X 866.8 — EXISTING SPOT ELEVATION
- CONTROL POINT
- TEMPORARY BENCH MARK
- EXISTING BIG ROCK
- FLWY — FLOODWAY
- FLPL — FLOODPLAIN
- WATER EDGE

For Public Viewing Only
Not To Be Downloaded

COMMONWEALTH ENGINEERS, INC.
A world of resources to make a concrete goal.
https://commonwealthengineers.com/

BRIAN KREED WILSON — REGISTERED — No. PE11900866 — STATE OF INDIANA — PROFESSIONAL ENGINEER
Brian Wilson — Signature — 8/15/2025 — Date

CITY OF KOKOMO, INDIANA
HOWARD COUNTY

NORTH SIDE INTERCEPTOR IMPROVEMENTS PROJECT

© 2025 BY COMMONWEALTH ENGINEERS, INC. ALL RIGHTS RESERVED. REPRODUCTION BY ANY METHOD, IN WHOLE OR IN PART WITHOUT PERMISSION IS PROHIBITED

Know what's below. Call before you dig. Indiana 811 — 1-800-382-5544 (IT'S THE LAW)

No.	Submittal / Revision	By	Date

Designed By:	Drawn By:	Checked By:
BW	BW/CH/EK	JH
Issue Date: 8/2025	Project No: S21082	Scale: AS SHOWN

GENERAL NOTES, UTILITY COMPANIES & CONTACTS, EXISTING UTILITY NOTES

Drawing No: G4
Sheet: 4 OF 137

File: Z:\SHARED\IN CLIENTS A-L\KOKOMO\S21082 NORTH SIDE INTERCEPTOR DESIGN\06 CAD\A CURRENT FILES\1 DRAWINGS\02 - S21082 - VICINITY MAP AND INDEX TO SHEETS.DWG
Saved: 8/15/2025 2:30:46 PM Plotted: 8/18/2025 7:50:24 AM Current User: Brian Waterman LastSavedBy: bwaterman

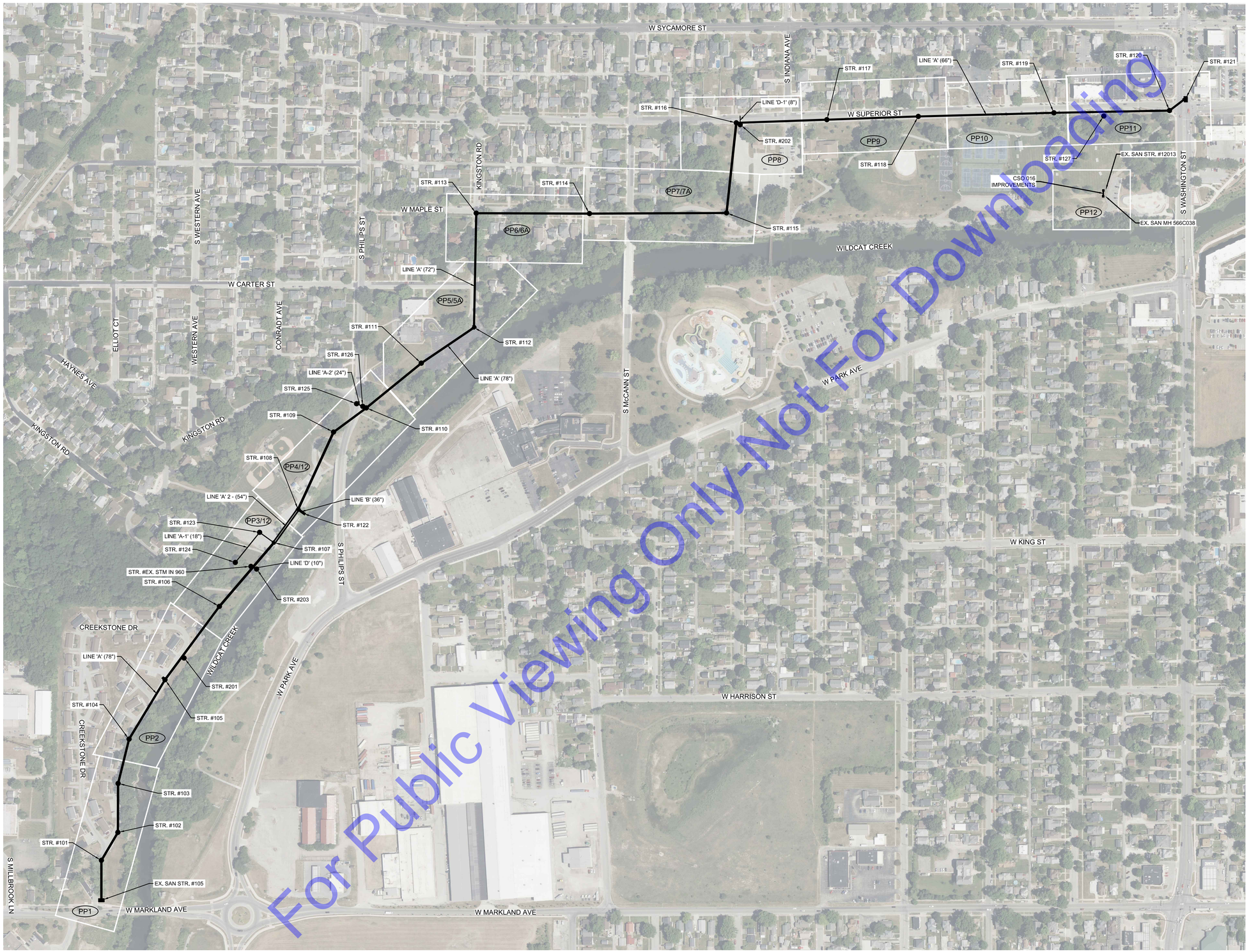

For Public Viewing Only-Not For Downloading

SCALE: 1"=200'

200' 0 200'

GENERAL LOCATION PLAN

SCALE: 1"=200'-0"

COMMONWEALTH ENGINEERS, INC.
A wealth of resources to master a common goal.
https://commonwealthengineers.com/

BRIAN KREED WILSON
REGISTERED
No. PE11900866
STATE OF INDIANA
PROFESSIONAL ENGINEER

Brian Wilson
Signature

8/15/2025
Date

CITY OF KOKOMO, INDIANA
HOWARD COUNTY

NORTH SIDE INTERCEPTOR
IMPROVEMENTS PROJECT

© 2025 BY COMMONWEALTH ENGINEERS, INC. ALL RIGHTS RESERVED. REPRODUCTION BY ANY METHOD IN WHOLE OR IN PART WITHOUT PERMISSION IS PROHIBITED

Know what's below. Call before you dig.
1-800-382-5544
(ITS THE LAW)

No.	Submittal / Revision	By	Date

Designed By:	Drawn By:	Checked By:
BW	BW/CH/EK	JH
Issue Date:	Project No:	Scale:
8/2025	S21082	AS SHOWN

GENERAL LOCATION PLAN

Drawing No:
G5

Sheet: 5 OF 137

File: Z:\SHARED\IN CLIENTS A-L\KOKOMO\S21082 NORTH SIDE INTERCEPTOR DESIGN\06 CAD\A CURRENT FILES\1 DRAWINGS\03 - S21082 - GENERAL LOCATION PLAN AND CONTROL.DWG
Saved: 8/12/2025 2:16:08 PM Plotted: 8/13/2025 11:29:24 AM Current User: Brian Waterman LastSavedBy: bwaterman

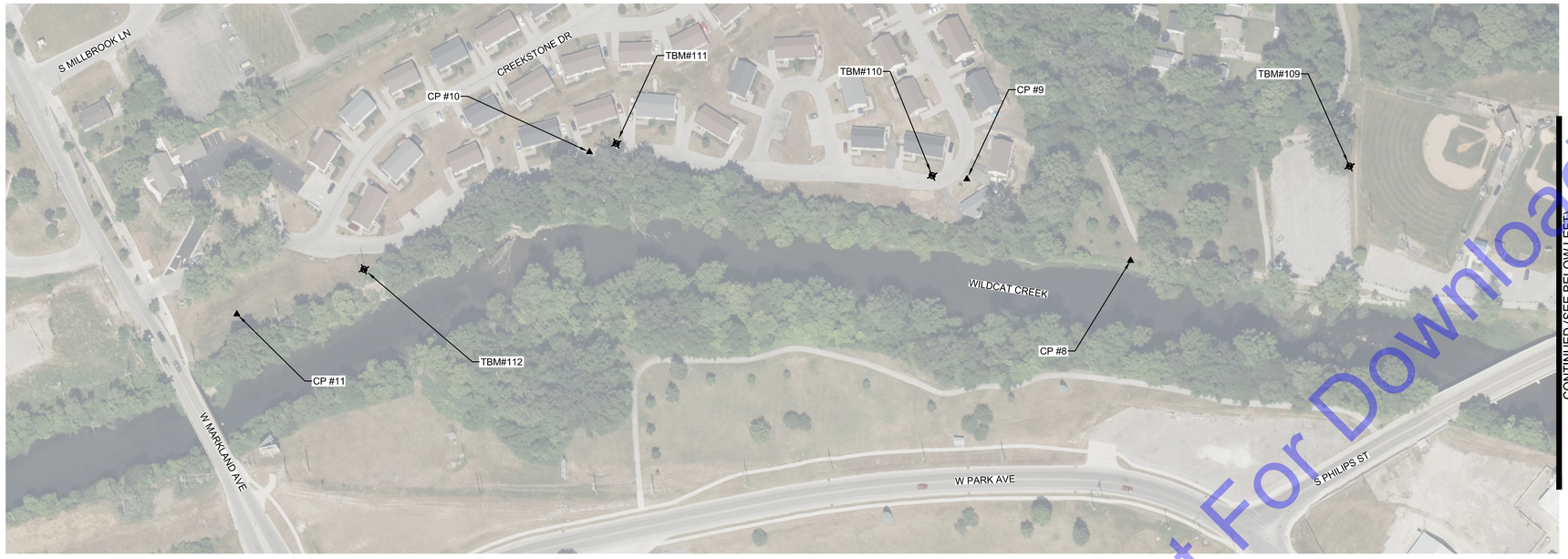

CONTINUED (SEE BELOW LEFT)



CONTINUED (SEE ABOVE RIGHT)

CONTINUED (SEE DWG. G7)

SCALE: 1"=100'

100' 0 100'

SCALE: 1"=100'

100' 0 100'

For Public Viewing Only-Not For Downloading

PROJECT COORDINATES ARE BASED ON THE FOLLOWING:

HORIZONTAL - US STATE PLANE COORDINATES: NAD83 (NORTH AMERICAN DATUM) INDIANA EAST ZONE, IN83-EF.

VERTICAL - USGS 1988 NAVD (NORTH AMERICAN VERTICAL DATUM) - PER GPS OBSERVATIONS (NOT VERIFIED BY PHYSICAL LOCATION OF PUBLISHED USGS MONUMENTS).

CONTRACTOR SHALL ESTABLISH TEMPORARY BENCHMARKS ALONG ALIGNMENT AS A PART OF THEIR PRE-CONSTRUCTION SURVEY ACTIVITIES. CONTRACTOR SHALL CONFIRM ELEVATIONS OF PROPOSED ALIGNMENT AND PROVIDE TO OWNER/ENGINEER PRIOR TO CONSTRUCTION.

SURVEY CONTROL SCHEDULE

SCALE: 1"=100'-0"

CONTROL SCHEDULE

POINT #	NORTHING	EASTING	ELEVATION	DESCRIPTION
1	1907880.83	198140.30		CONTROL POINT - CAPPED REBAR
2	1907878.42	197413.62		CONTROL POINT - CAPPED REBAR
3	1907897.18	196736.47		CONTROL POINT - CAPPED REBAR
4	1907461.02	196093.11		CONTROL POINT - CAPPED REBAR
5	1907451.71	195275.56		CONTROL POINT - CAPPED REBAR
6	1907031.60	195252.80		CONTROL POINT - CAPPED REBAR
7	1906469.37	194616.40		CONTROL POINT - CAPPED REBAR
8	1905891.89	194287.21		CONTROL POINT - CAPPED REBAR
9	1905735.46	194073.97		CONTROL POINT - CAPPED REBAR
10	1905267.72	193789.02		CONTROL POINT - CAPPED REBAR
11	1904706.87	193764.11		CONTROL POINT - CAPPED REBAR
100			806.82	TBM /CUT "X" NORTH-NORTHWEST ON FH BONNET BOLT
101			802.44	TBM /CUT "SQUARE" SOUTH SIDE CONC. LIGHTPOLE BASE
102			797.16	TBM /BOAT SPIKE 1' UP SOUTH SIDE OF PP 004336
103			796.00	TBM /BOAT SPIKE 1' UP NORTHWEST SIDE OF PP 242285

CONTROL SCHEDULE

POINT #	NORTHING	EASTING	ELEVATION	DESCRIPTION
104			803.86	TBM /BOAT SPIKE 0.5' UP NORTH SIDE OF PP HWI4282
105			808.88	TBM /CUT "X" SOUTH SOUTHEAST OF FH BONNET BOLT
106			805.00	TBM /BOAT SPIKE 1; UP EAST SIDE OF PP 321
107			789.36	TBM /CUT "SQUARE" NORTHEAST END OF HEADWALL
108			797.60	TBM /CUT "X" NORTHWEST CORNER OF WEST HEADWALL
109			789.94	TBM /BOAT SPIKE 1' UP SOUTHEAST SIDE OF PP
110			802.64	TBM /CUT "SQUARE" EAST SIDE CONC. LAMP BASE
111			808.36	TBM /CUT "X" NORTHEAST OF FH BONNET BOLT
112			799.93	TBM /BOAT SPIKE 1' UP WEST SIDE OF PP 033-312
1960	1907460.36	195489.51		CONTROL POINT - MAG SPIKE
3663	1907583.76	196280.59		CONTROL POINT - MAG SPIKE
4716	1907828.93	196454.73		CONTROL POINT - MAG SPIKE
6558	1907881.35	197792.07		CONTROL POINT - MAG SPIKE
6559	1907897.50	197790.70		CONTROL POINT - TEMPORARY
6705	1907853.62	197499.49		CONTROL POINT - TEMPORARY

COMMONWEALTH ENGINEERS, INC.
A wealth of resources to master a common goal.
https://commonwealthengineers.com/

BRIAN KREED WILSON
REGISTERED
No. PE11900866
STATE OF
INDIANA
PROFESSIONAL ENGINEER
Brian Wilson
Signature
8/15/2025
Date

CITY OF KOKOMO, INDIANA
HOWARD COUNTY

NORTH SIDE INTERCEPTOR
IMPROVEMENTS PROJECT

© 2025 BY COMMONWEALTH ENGINEERS, INC. ALL RIGHTS RESERVED. REPRODUCTION BY ANY METHOD IN WHOLE OR IN PART WITHOUT PERMISSION IS PROHIBITED

Indiana 811 Know what's below. Call before you dig.
Know what's below. 811 before you dig.
1-800-382-5544
(ITS THE LAW)

No.	Submittal Revision	By:	Date

Designed By:	Drawn By:	Checked By:
BW	BW/CH/EK	JH
Issue Date:	Project No:	Scale:
8/2025	S21082	AS SHOWN

SURVEY CONTROL SCHEDULE

Drawing No:
G6
Sheet: 6 OF 137

File: Z:\SHARED\IN CLIENTS A-L\KOKOMO\S21082 NORTH SIDE INTERCEPTOR DESIGN\06 CAD\A CURRENT FILES\1 DRAWINGS\03 - S21082 - GENERAL LOCATION PLAN AND CONTROL.DWG
Saved: 8/6/2025 9:02:24 AM Plotted: 8/7/2025 4:25:56 PM Current User: Bryce Persinger LastSavedBy: bwaterman



SCALE: 1"=100'

100' 0 100'

For Public Viewing Only-Not For Downloading

PROJECT COORDINATES ARE BASED ON THE FOLLOWING:

HORIZONTAL - US STATE PLANE COORDINATES: NAD83 (NORTH AMERICAN DATUM) INDIANA EAST ZONE, IN83-EF.

VERTICAL - USGS 1988 NAVD (NORTH AMERICAN VERTICAL DATUM) - PER GPS OBSERVATIONS (NOT VERIFIED BY PHYSICAL LOCATION OF PUBLISHED USGS MONUMENTS).

CONTRACTOR SHALL ESTABLISH TEMPORARY BENCHMARKS ALONG ALIGNMENT AS A PART OF THEIR PRE-CONSTRUCTION SURVEY ACTIVITIES. CONTRACTOR SHALL CONFIRM ELEVATIONS OF PROPOSED ALIGNMENT AND PROVIDE TO OWNER/ENGINEER PRIOR TO CONSTRUCTION.

SURVEY CONTROL SCHEDULE

SCALE: 1"=100'-0"

CONTROL SCHEDULE

POINT #	NORTHING	EASTING	ELEVATION	DESCRIPTION
1	1907880.83	198140.30		CONTROL POINT - CAPPED REBAR
2	1907878.42	197413.62		CONTROL POINT - CAPPED REBAR
3	1907897.18	196736.47		CONTROL POINT - CAPPED REBAR
4	1907461.02	196093.11		CONTROL POINT - CAPPED REBAR
5	1907451.71	195275.56		CONTROL POINT - CAPPED REBAR
6	1907031.60	195252.80		CONTROL POINT - CAPPED REBAR
7	1906469.37	194616.40		CONTROL POINT - CAPPED REBAR
8	1905891.89	194287.21		CONTROL POINT - CAPPED REBAR
9	1905735.46	194073.97		CONTROL POINT - CAPPED REBAR
10	1905267.72	193789.02		CONTROL POINT - CAPPED REBAR
11	1904706.87	193764.11		CONTROL POINT - CAPPED REBAR
100			806.82	TBM /CUT "X" NORTH-NORTHWEST ON FH BONNET BOLT
101			802.44	TBM /CUT "SQUARE" SOUTH SIDE CONC. LIGHTPOLE BASE
102			797.16	TBM /BOAT SPIKE 1' UP SOUTH SIDE OF PP 004336
103			796.00	TBM /BOAT SPIKE 1' UP NORTHWEST SIDE OF PP 242285

CONTROL SCHEDULE

POINT #	NORTHING	EASTING	ELEVATION	DESCRIPTION
104			803.86	TBM /BOAT SPIKE 0.5' UP NORTH SIDE OF PP HW4282
105			808.88	TBM /CUT "X" SOUTH SOUTHEAST OF FH BONNET BOLT
106			805.00	TBM /BOAT SPIKE 1; UP EAST SIDE OF PP 321
107			789.36	TBM /CUT "SQUARE" NORTHEAST END OF HEADWALL
108			797.60	TBM /CUT "X" NORTHWEST CORNER OF WEST HEADWALL
109			789.94	TBM /BOAT SPIKE 1' UP SOUTHEAST SIDE OF PP
110			802.64	TBM /CUT "SQUARE" EAST SIDE CONC. LAMP BASE
111			808.36	TBM /CUT "X" NORTHEAST OF FH BONNET BOLT
112			799.93	TBM /BOAT SPIKE 1' UP WEST SIDE OF PP 033-312
1960	1907460.36	195489.51		CONTROL POINT - MAG SPIKE
3663	1907583.76	196280.59		CONTROL POINT - MAG SPIKE
4716	1907828.93	196454.73		CONTROL POINT - MAG SPIKE
6558	1907881.35	197792.07		CONTROL POINT - MAG SPIKE
6559	1907897.50	197790.70		CONTROL POINT - TEMPORARY
6705	1907853.62	197499.49		CONTROL POINT - TEMPORARY

COMMONWEALTH ENGINEERS, INC.
A wealth of resources to master a common goal.
https://commonwealthengineers.com/

BRIAN KREED WILSON
REGISTERED
No. PE11900866
STATE OF INDIANA
PROFESSIONAL ENGINEER

Brian Wilson 8/15/2025
Signature Date

CITY OF KOKOMO, INDIANA
HOWARD COUNTY

NORTH SIDE INTERCEPTOR
IMPROVEMENTS PROJECT

© 2025 BY COMMONWEALTH ENGINEERS, INC. ALL RIGHTS RESERVED. REPRODUCTION BY ANY METHOD IN WHOLE OR IN PART WITHOUT PERMISSION IS PROHIBITED

Indiana 811 Know what's below. Call before you dig.
Know what's below. 811 before you dig.
1-800-382-5544 (ITS THE LAW)

No.	Submittal / Revision	By	Date

Designed By:	Drawn By:	Checked By:
BW	BW/CH/EK	JH
Issue Date: 8/2025	Project No: S21082	Scale: AS SHOWN

SURVEY CONTROL SCHEDULE

Drawing No: G7

Sheet: 7 OF 137

File: Z:\SHARED\IN CLIENTS A-L\KOKOMO\S21082 NORTH SIDE INTERCEPTOR DESIGN\06 CAD\A CURRENT FILES\1 DRAWINGS\03 - S21082 - GENERAL LOCATION PLAN AND CONTROL.DWG
Saved: 8/6/2025 9:02:24 AM Plotted: 8/7/2025 4:25:59 PM Current User: Bryce Persinger LastSavedBy: bwaterman

STRUCTURE TABLE

STRUCTURE NAME:	COORDINATES:	RIM:	STRUCTURE SIZE:	PIPES IN:	PIPES OUT:
101	N: 1904801.78 E: 193705.04	798.3±	144 MANHOLE	78" INV: 774.30 NE (IN)	78" INV: 774.20 S (OUT)
102	N: 1904917.22 E: 193773.27	801.0±	144 MANHOLE	78" INV: 774.53 N (IN)	78" INV: 774.43 SW (OUT)
103	N: 1905119.20 E: 193774.09	804.7±	144 MANHOLE	78" INV: 774.83 N (IN)	78" INV: 774.73 S (OUT)
104	N: 1905302.23 E: 193819.34	805.9±	144 MANHOLE	78" INV: 775.12 NE (IN)	78" INV: 775.02 S (OUT)
105	N: 1905547.30 E: 193967.84	801.9±	144 MANHOLE	78" INV: 775.51 NE (IN) 18" INV: 777.30 NW (IN) 18" INV: 784.45 NW (IN)	78" INV: 775.41 SW (OUT)
106	N: 1905850.16 E: 194192.39	787.6±	144 MANHOLE	78" INV: 775.99 NE (IN)	78" INV: 775.89 SW (OUT)
107	N: 1906113.23 E: 194417.47	787.6±	CAST IN PLACE STRUCTURE	54" INV: 776.44 NE (IN) 18" INV: 777.00 NW (IN)	78" INV: 776.34 SW (OUT)
108	N: 1906249.64 E: 194519.61	787.4±	CAST IN PLACE STRUCTURE	78" INV: 776.71 NE (IN)	54" INV: 776.61 SW (OUT) 36" INV: 781.80 SE (OUT)
109	N: 1906569.79 E: 194663.99	791.6±	144 MANHOLE	78" INV: 777.16 NE (IN)	78" INV: 777.06 SW (OUT)
110	N: 1906669.31 E: 194798.85	795.4±	144 MANHOLE	78" INV: 777.43 NE (IN) 24" INV: 782.11 NW (IN) 18" INV: 778.00 NW (IN)	78" INV: 777.33 SW (OUT)
111	N: 1906853.96 E: 195026.14	792.2±	144 MANHOLE	78" INV: 777.81 NE (IN)	78" INV: 777.71 SW (OUT)
112	N: 1907001.32 E: 195243.73	795.5±	CAST IN PLACE STRUCTURE	72" INV: 778.17 N (IN) 48" INV: 780.35 NE (IN)	78" INV: 778.07 SW (OUT)
113	N: 1907473.33 E: 195253.12	809.2±	144 MANHOLE	72" INV: 778.75 E (IN)	72" INV: 778.65 S (OUT)
114	N: 1907471.56 E: 195720.89	806.4±	144 MANHOLE	72" INV: 779.32 E (IN) 8" INV: 780.50 N (IN) 8" INV: 797.10 N (IN)	72" INV: 779.22 W (OUT)
115	N: 1907474.22 E: 196286.73	793.0±	144 MANHOLE	72" INV: 780.10 N (IN)	72" INV: 779.89 W (OUT) 72" INV: 784.90 S (OUT)
116	N: 1907846.27 E: 196327.13	797.4±	144 MANHOLE	66" INV: 780.47 E (IN) 72" INV: 786.60 N (IN)	72" INV: 780.47 S (OUT)
117	N: 1907859.26 E: 196701.03	798.1±	120 MANHOLE	66" INV: 781.14 E (IN)	66" INV: 780.84 W (OUT)
118	N: 1907872.70 E: 197078.90	797.3±	120 MANHOLE	66" INV: 781.62 E (IN) 24" INV: 784.10 N (IN)	66" INV: 781.52 W (OUT) 24" INV: 784.10 S (OUT)
119	N: 1907887.55 E: 197638.98	800.9±	120 MANHOLE	66" INV: 782.28 E (IN)	66" INV: 782.18 W (OUT)
120	N: 1907896.87 E: 198116.22	804.9±	120 MANHOLE	66" INV: 785.76 NE (IN)	66" INV: 784.19 W (OUT)
121	N: 1907947.85 E: 198183.29	806.7±	CAST IN PLACE STRUCTURE	84" INV: 788.40 N (IN)	66" INV: 786.60 SW (OUT) 84" INV: 788.30 S (OUT)
122	N: 1906231.65 E: 194544.47	785.6±	CONCRETE HEADWALL	36" INV: 781.74 NW (IN)	
123	N: 1906155.65 E: 194358.42	787.9±	48 MANHOLE	18" INV: 778.70 SW (IN)	18" INV: 777.36 SE (OUT)
124	N: 1906031.50 E: 194258.13	787.0±	48 MANHOLE	18" INV: 781.27 NW (IN)	18" INV: 779.50 NE (OUT)
125	N: 1906686.91 E: 194758.96	797.3±	60 MANHOLE	24" INV: 783.49 N (IN)	24" INV: 783.08 SE (OUT)
126	N: 1906675.65 E: 194784.58	796.5±	60 MANHOLE	10" INV: 793.27 N (IN) 10" INV: 784.00 N (IN) 24" INV: 782.52 NW (IN)	24" INV: 782.42 SE (OUT)
127	N: 1907874.27 E: 197844.74	801.6±	48 MANHOLE	24" INV: 789.75 N (IN)	24" INV: 789.65 S (OUT)
201	N: 1905636.87 E: 194046.47	801.3±	48 MANHOLE	24" INV: 793.00 NW (IN)	24" INV: 792.90 SE (OUT)
202	N: 1907838.32 E: 196343.20	796.9±	24 x 24 inch Rectangular Structure		8" INV: 794.11 N (OUT)
203	N: 1906004.14 E: 194346.05	786.3±	30 MANHOLE	10" INV: 783.91 NW (IN)	10" INV: 782.39 SE (OUT)
EX. SAN STR. #105	N: 1904637.16 E: 193705.05	795.6±	144 x 270 inch Rectangular Structure	6" INV: 791.38 W (IN) 30" INV: 774.50 E (IN) 30" INV: 774.50 E (IN) 78" INV: 774.04 N (IN)	72" INV: 774.00 S (OUT) 72" INV: 774.00 S (OUT)
EX. STM IN 960	N: 1906015.29 E: 194322.83	785.1±	30 MANHOLE		10" INV: 782.56 SE (OUT) 10" INV: 784.10 SE (OUT)

STRUCTURE TABLE

STRUCTURE NAME:	COORDINATES:	RIM:	PIPES IN:	PIPES OUT:
EX. SAN MH 8956	N: 1907980.7570 E: 198125.3060	807.0±	8" INV: 797.11 W (IN)	8" INV: 797.03 E (OUT)
EX. CSO014	N: 1907537.0820 E: 198140.2610	804.3±	84" INV: 788.23 N (IN) 42" INV: 799.43 E (IN) 12" INV: 789.18 S (IN)	48" INV: 781.79 W (OUT)
EX. SAN CO 116406	N: 1904660.2160 E: 193630.2300	800.9±		6" INV: 795.88 S (OUT)
EX. SAN MH 565C005	N: 1907384.7587 E: 196047.8983	793.4±	48" INV: 781.59 W (IN) 48" INV: 781.50 E (IN)	10" INV: 786.37 N (OUT)
EX. SAN MH 565C050	N: 1907249.3840 E: 195714.3600	798.8±	8" INV: 797.10 N (IN)	48" INV: 781.54 SW (OUT) 48" INV: 781.54 E (OUT)
EX. SAN MH 565D002	N: 1907507.1880 E: 197079.8470	789.0±	48" INV: 782.02 E (IN)	48" INV: 782.02 W (OUT)
EX. SAN MH 565D024	N: 1907442.8470 E: 196573.8386	791.6±	48" INV: 781.82 E (IN)	48" INV: 781.82 W (OUT)
EX. SAN MH 565D025	N: 1907440.5466 E: 196527.8991	791.9±	48" INV: 781.79 E (IN)	48" INV: 781.79 W (OUT)
EX. SAN MH 565D026	N: 1907429.8433 E: 196270.5057	792.8±	48" INV: 781.00 E (IN)	48" INV: 781.52 W (OUT)
EX. SAN MH 565D028	N: 1907518.5621 E: 197399.3569	789.8±	48" INV: 781.79 E (IN)	48" INV: 782.22 W (OUT)
EX. SAN MH 566C038	N: 1907542.9728 E: 197842.2155	790.5±	48" INV: 781.79 E (IN) 12" INV: 785.65 NW (IN) 24" INV: 783.00 N (IN) 24" INV: 786.06 N (IN)	48" INV: 781.79 W (OUT) 24" INV: 786.06 S (OUT)
EX. SAN MH 619A072	N: 1907081.0680 E: 195385.4100	799.2±	48" INV: 780.97 NE (IN)	48" INV: 780.65 SW (OUT)
EX. SAN MH 950	N: 1906675.5310 E: 194764.5653	796.6±	10" INV: 793.27 N (IN) 48" INV: 779.92 NE (IN)	48" INV: 779.93 SW (OUT)
EX. SAN MH 951	N: 1906649.4760 E: 194760.4427	796.5±	24" INV: 783.49 N (IN)	18" INV: 783.66 S (OUT)
EX. SAN MH 956	N: 1906334.0126 E: 194512.0717	789.9±	4" INV: 786.68 NW (IN) 6" INV: 782.80 W (IN)	48" INV: 779.92 SW (OUT)
EX. SAN MH 959	N: 1906023.2330 E: 194266.3555	786.9±	18" INV: 781.27 NW (IN) 48" INV: 779.46 NE (IN)	48" INV: 779.36 SW (OUT)
EX. SAN MH 961	N: 1905735.8387 E: 194069.9092	802.8±		6" INV: 799.27 S (OUT)
EX. SAN MH 963	N: 1905546.4404 E: 193968.0250	801.8±	18" INV: 784.45 NW (IN)	18" INV: 784.16 SW (OUT)
EX. SAN MH 964	N: 1905514.8058 E: 193941.4170	802.3±	48" INV: 779.36 NE (IN)	48" INV: 779.42 SW (OUT)
EX. SAN MH 965	N: 1904971.8751 E: 193766.5215	802.0±	18" INV: 783.86 N (IN)	18" INV: 783.20 S (OUT)
EX. SAN MH 966	N: 1904778.5667 E: 193783.2188	795.4±	48" INV: 778.90 N (IN) 8" INV: 790.85 NW (IN)	48" INV: 778.90 S (OUT)
EX. SAN MH 967	N: 1904614.9740 E: 193774.1517	796.3±	18" INV: 782.73 N (IN) 8" INV: 783.43 W (IN)	18" INV: 782.77 S (OUT)
EX. SAN MH 968	N: 1904611.9824 E: 193787.4612	796.3±	48" INV: 778.69 N (IN)	48" INV: 778.69 S (OUT)
EX. SAN MH 977	N: 1907912.4155 E: 198183.2127	806.3±		84" INV: 788.23 S (OUT)
EX. SAN MH 978	N: 1905319.5328 E: 193866.2553	804.4±	18" INV: 783.82 NE (IN)	18" INV: 783.82 S (OUT)
EX. SAN MH 1152	N: 1905135.8178 E: 193771.1125	804.9±	48" INV: 779.42 NE (IN)	48" INV: 779.32 S (OUT)
EX. SAN MH 2864	N: 1907488.4924 E: 195719.7806	806.3±	8" INV: 797.16 N (IN) 8" INV: 798.59 W (IN)	8" INV: 797.10 S (OUT)
EX. SAN MH 2866	N: 1907464.7754 E: 195721.2688	806.2±	8" INV: 797.13 N (IN)	8" INV: 797.10 S (OUT) 8" INV: 797.98 SW (OUT)
EX. SAN MH 3733	N: 1907442.7832 E: 196043.8379	802.2±	10" INV: 794.44 S (IN)	10" INV: 797.44 N (OUT)
EX. SAN MH 4048	N: 1907429.8346 E: 196281.9677	792.7±	72" INV: 784.69 N (IN) 48" INV: 781.52 E (IN)	72" INV: 784.98 SW (OUT) 48" INV: 781.52 W (OUT)
EX. SAN MH 4299	N: 1907508.8157 E: 196281.3577	792.1±		3.6" INV: 785.63 E (OUT)
EX. SAN MH 5383	N: 1907611.5919 E: 196208.0928	788.9±		
EX. SAN MH 5441	N: 1907858.3160 E: 196328.4876	797.7±	6" INV: 794.13 W (IN) 72" INV: 786.64 N (IN)	72" INV: 786.61 S (OUT)
EX. SAN MH 6547	N: 1907918.3539 E: 197844.8097	802.2±	12" INV: 798.75 W (IN) 12" INV: 797.46 N (IN) 12" INV: 796.82 NE (IN) 12" INV: 798.16 S (IN) 24" INV: 790.40 N (IN) 10" INV: 797.63 S (IN) 8" INV: 798.20 NE (IN)	24" INV: 790.30 S (OUT)
EX. SAN MH 6583	N: 1907904.9253 E: 197078.9102	797.3±	12" INV: 784.50 N (IN)	24" INV: 784.14 S (OUT)
EX. SAN MH 10090	N: 1906901.5793 E: 195066.4873	794.5±	48" INV: 780.25 NE (IN)	48" INV: 780.25 SW (OUT)
EX. SAN MH 112886	N: 1906262.4946 E: 194455.5264	787.3±	48" INV: 779.67 NE (IN)	48" INV: 779.67 SW (OUT)
EX. SAN MH 114496	N: 1905748.0201 E: 194009.2508	803.8±		8" INV: 797.43 NW (OUT)
EX. SAN MH 116410	N: 1904640.9901 E: 193634.0068	799.5±	6" INV: 795.88 N (IN)	48" INV: 791.95 SW (OUT) 27" INV: 774.45 E (OUT) 27" INV: 774.36 E (OUT)
EX. SAN MH 116992	N: 1904597.0241 E: 193601.8448	797.4±	8" INV: 791.31 W (IN)	8" INV: 791.36 E (OUT)
EX. SAN STR. #12013	N: 1907567.0079 E: 197842.9076	791.0±	24" INV: 785.91 N (IN)	12" INV: 785.86 W (OUT) 24" INV: 785.86 S (OUT) 24" INV: 786.06 S (OUT)
EX. SAN STR. #12014	N: 1907564.1346 E: 197829.0083	790.9±	12" INV: 785.59 E (IN)	12" INV: 785.59 SE (OUT)
EX. STM HWL 11074	N: 1906490.4500 E: 194789.7690	784.2±	18" INV: 782.58 N (IN)	

STRUCTURE TABLE

STRUCTURE NAME:	COORDINATES:	RIM:	PIPES IN:	PIPES OUT:
EX. STM HWL 112782	N: 1906151.5110 E: 194484.0211	787.9±	" INV: 783.88 NW (IN)	
EX. STM IN 79	N: 1907858.9592 E: 197087.5364	796.7±	12" INV: 789.04 N (IN)	12" INV: 788.98 S (OUT)
EX. STM IN 952	N: 1906552.7175 E: 194732.2222	795.4±		12" INV: 792.22 S (OUT)
EX. STM IN 953	N: 1906560.3560 E: 194702.9806	795.0±	12" INV: 792.22 N (IN)	12" INV: 789.22 SW (OUT)
EX. STM IN 954	N: 1906564.3722 E: 194704.3714	794.9±		12" INV: 792.14 S (OUT)
EX. STM IN 957	N: 1906316.7843 E: 194491.3687	787.2±		6" INV: 784.04 SE (OUT)
EX. STM IN 962	N: 1905645.0470 E: 194031.4150	800.7±	24" INV: 793.04 NW (IN)	24" INV: 793.01 SE (OUT)
EX. STM IN 969	N: 1904613.2753 E: 193721.4041	795.7±	12" INV: 791.04 S (IN) 15" INV: 790.71 W (IN)	18" INV: 790.80 NE (OUT)
EX. STM IN 970	N: 1904630.8640 E: 193747.3390	794.3±	18" INV: 790.70 SW (IN)	18" INV: 790.59 NE (OUT)
EX. STM IN 971	N: 1904613.1702 E: 193666.1635	795.7±	15" INV: 792.01 W (IN) 15" INV: 792.11 N (IN)	15" INV: 792.01 E (OUT)
EX. STM IN 973	N: 1904570.8490 E: 193719.7680	795.4±		12" INV: 791.81 N (OUT)
EX. STM IN 974	N: 1904846.4907 E: 193704.3662	798.2±	15" INV: 794.81 W (IN)	15" INV: 794.70 E (OUT)
EX. STM IN 979	N: 1906433.7296 E: 194609.3734	788.7±		8" INV: 785.61 E (OUT)
EX. STM IN 1557	N: 1907012.7618 E: 195202.8635	795.5±		8" INV: 792.58 SE (OUT)
EX. STM IN 1558	N: 1906995.1741 E: 195217.2952	795.1±		8" INV: 792.77 SE (OUT)
EX. STM IN 1653	N: 1907184.8367 E: 195231.3077	799.9±		8" INV: 797.04 S (OUT)
EX. STM IN 2770	N: 1907489.6047 E: 195699.1402	806.3±		10" INV: 803.90 E (OUT)
EX. STM IN 4808	N: 1907838.2224 E: 196329.6792	796.9±		8" INV: 794.64 N (OUT)
EX. STM IN 5711	N: 1907895.3752 E: 196530.1059	798.2±		12" INV: 795.40 E (OUT)
EX. STM IN 5712	N: 1907893.7353 E: 196553.3284	798.2±		12" INV: 795.14 W (OUT)
EX. STM IN 5735	N: 1907875.3095 E: 196342.7411	797.2±	8" INV: 794.00 S (IN)	8" INV: 793.63 W (OUT)
EX. STM IN 6546	N: 1907921.2078 E: 197812.5424	801.8±		12" INV: 798.75 E (OUT)
EX. STM IN 6556	N: 1907884.9856 E: 197855.3640	802.0±	12" INV: 798.21 W (IN)	12" INV: 798.00 N (OUT)
EX. STM IN 6557	N: 1907883.5481 E: 197814.1259	801.8±		12" INV: 798.68 E (OUT)
EX. STM IN 6582	N: 1907902.2231 E: 197085.3726	797.1±		12" INV: 793.74 S (OUT)
EX. STM IN 6706	N: 1907909.1417 E: 197291.4812	798.4±		8" INV: 795.60 S (OUT)
EX. STM IN 8955	N: 1907968.9103 E: 198147.9989	806.8±		
EX. STM IN 9144	N: 1907934.9789 E: 198218.6669	806.3±	10" INV: 803.19 E (IN)	8" INV: 803.12 S (OUT) 8" INV: 803.81 S (OUT) 12" INV: 803.26 NW (OUT)
EX. STM IN 9145	N: 1907932.6560 E: 198237.7151	806.8±		10" INV: 803.41 W (OUT)
EX. STM IN 9146	N: 1907964.1318 E: 198204.6881	806.7±	12" INV: 803.38 SE (IN)	12" INV: 803.38 N (OUT)
EX. STM IN 9181	N: 1907864.7890 E: 198214.9768	805.7±	8" INV: 799.79 N (IN) 8" INV: 799.69 N (IN)	15" INV: 799.45 S (OUT)
EX. STM IN 10883	N: 1906765.1659 E: 194756.6047	798.7±		8" INV: 796.38 E (OUT)
EX. STM MH 955	N: 1906446.6510 E: 194641.0241	789.3±	12" INV: 783.92 NE (IN) 8" INV: 785.37 W (IN)	12" INV: 783.92 S (OUT)
EX. STM MH 958	N: 1906286.3420 E: 194241.3767	790.8±	" INV: 785.06 NW (IN)	" INV: 785.06 SE (OUT)
EX. STM MH 976	N: 1907888.9680 E: 198197.2889	805.8±	21" INV: 796.74 E (IN)	21" INV: 795.29 W (OUT)
EX. STM MH 2865	N: 1907488.3341 E: 195714.4762	806.4±	12" INV: 801.25 N (IN) 10" INV: 803.12 W (IN)	12" INV: 801.01 S (OUT)
EX. STM MH 5710	N: 1907893.9090 E: 196538.8913	798.4±	12" INV: 795.46 W (IN) 78" INV: 787.28 N (IN) 12" INV: 795.14 E (IN)	" INV: 787.28 S (OUT)
Structure - (125)	N: 1904547.3187 E: 193774.8698	794.9±	18" INV: 782.77 N (IN)	18" INV: 782.00 E (OUT)
Structure - (126)	N: 1904547.3187 E: 193787.5405	795.1±	18" INV: 782.00 W (IN) 48" INV: 778.69 N (IN)	48" INV: 778.59 S (OUT)
Structure - (165)	N: 1907893.8206 E: 196546.2415	796.6±	12" INV: 795.14 E (IN)	12" INV: 795.14 W (OUT) " INV: 787.28 S (OUT)

For Public Viewing Only
Not For Download

COMMONWEALTH ENGINEERS, INC.
A wealth of resources to master a common goal.
https://commonwealthengineers.com/

BRIAN KREED WILSON
REGISTERED
No. PE11900866
STATE OF INDIANA
PROFESSIONAL ENGINEER

Brian Wilson
Signature

8/15/2025
Date

CITY OF KOKOMO, INDIANA
HOWARD COUNTY

NORTH SIDE INTERCEPTOR
IMPROVEMENTS PROJECT

© 2025 BY COMMONWEALTH ENGINEERS, INC. ALL RIGHTS RESERVED. REPRODUCTION BY ANY METHOD IN WHOLE OR IN PART WITHOUT PERMISSION IS PROHIBITED

Indiana 811 Know what's below. Call before you dig.
Know what's below. 811 before you dig.
1-800-382-5544
(ITS THE LAW)

No.	Submittal Revision	By	Date

Designed By:	Drawn By:	Checked By:
BW	BW/CH/EK	JH
Issue Date: 8/2025	Project No: S21082	Scale: AS SHOWN

STRUCTURE TABLES

Drawing No: G8

Sheet: 8 OF 137

File: Z:\SHARED\IN CLIENTS A-L\KOKOMO\S21082 NORTH SIDE INTERCEPTOR DESIGN\06 CAD\A CURRENT FILES\1 DRAWINGS\05 - S21082 - PLAN AND PROFILE.DWG
Saved: 8/15/2025 1:42:10 PM Plotted: 8/18/2025 7:50:46 AM Current User: Brian Waterman LastSavedBy: bwaterman



For Public Viewing Only-Not For Downloading

SCALE: 1"=125'

125' 0 125'

LEGEND

EXSN EXSN EXSN EXSN — EXISTING SANITARY SEWER TO BE CLEANED

EXISTING INTERCEPTOR CLEANING PLAN

SCALE: 1"=125'-0"

SPECIAL NOTE:
CONTRACTOR SHALL SEE SPECIFICATIONS FOR CLEANING REQUIREMENT. IT IS ANTICIPATED ALL SEWERS WILL REQUIRE HEAVY CLEANING. HEAVY CLEANING SHALL BE DEFINED AS CLEANING REQUIRING MORE THAN THREE (3) PASSES THROUGH THE SEWER LINE AND THE USE OF MECHANICAL CLEANING EQUIPMENT.

COMMONWEALTH ENGINEERS, INC.
A wealth of resources to master a common goal.
https://commonwealthengineers.com/

BRIAN KREED WILSON
REGISTERED
No. PE11900866
STATE OF INDIANA
PROFESSIONAL ENGINEER

Brian Wilson
Signature

8/15/2025
Date

CITY OF KOKOMO, INDIANA
HOWARD COUNTY

NORTH SIDE INTERCEPTOR
IMPROVEMENTS PROJECT

© 2025 BY COMMONWEALTH ENGINEERS, INC. ALL RIGHTS RESERVED. REPRODUCTION BY ANY METHOD IN WHOLE OR IN PART WITHOUT PERMISSION IS PROHIBITED

Indiana 811
Know what's below. Call before you dig.
Know what's below. 811 before you dig.
1-800-382-5544
(ITS THE LAW)

No.	Submittal / Revision	By	Date

Designed By:	Drawn By:	Checked By:
BW	BW/CH/EK	JH
Issue Date: 8/2025	Project No: S21082	Scale: AS SHOWN

EXISTING INTERCEPTOR CLEANING PLAN

Drawing No: G9

Sheet: 9 OF 137

File: Z:\SHARED\IN CLIENTS A-L\KOKOMO\S21082 NORTH SIDE INTERCEPTOR DESIGN\06 CAD\A CURRENT FILES\1 DRAWINGS\05 - S21082 - PLAN AND PROFILE.DWG
Saved: 8/13/2025 10:35:44 AM Plotted: 8/13/2025 11:30:46 AM Current User: Brian Waterman LastSavedBy: bwaterman

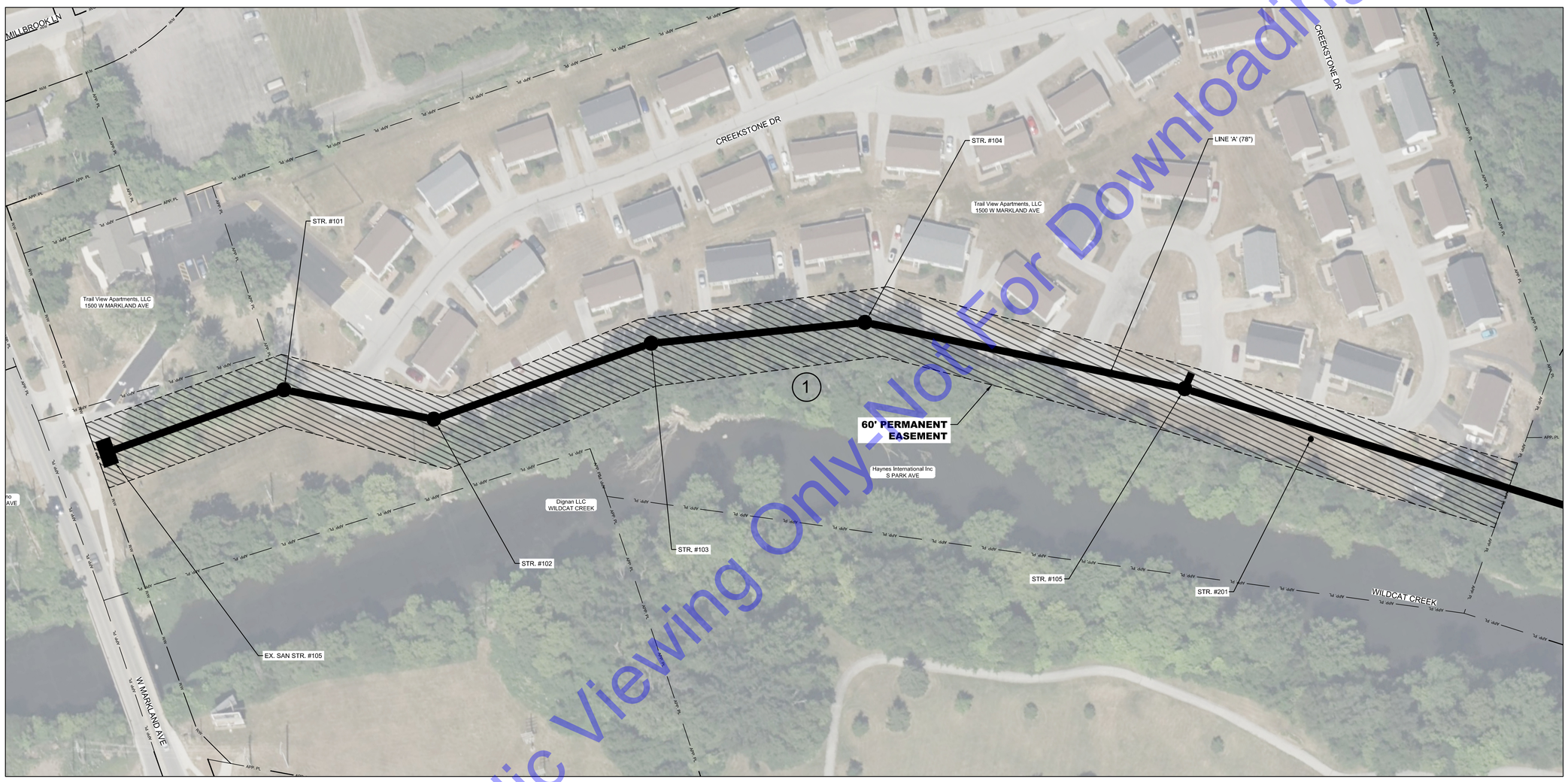

EASEMENT PLAN

SCALE: 1"=50'-0"

For Public Viewing Only-Not For Downloading

	NAME	PARCEL NUMBER	EASEMENT ADDRESS	TYPE OF EASEMENT
1	TRAIL VIEW APARTMENTS LLC	34-03-35-476-008.000-002	1500 W. MARKLAND AVE.	60' PERMANENT

SCALE: 1"=50'

50' 0 50'

COMMONWEALTH ENGINEERS, INC.
A wealth of resources to master a common goal.
https://commonwealthengineers.com/

BRIAN KREED WILSON
REGISTERED
No. PE11900866
STATE OF
INDIANA
PROFESSIONAL ENGINEER

Brian Wilson
Signature

8/15/2025
Date

CITY OF KOKOMO, INDIANA
HOWARD COUNTY

NORTH SIDE INTERCEPTOR
IMPROVEMENTS PROJECT

© 2025 BY COMMONWEALTH ENGINEERS, INC. ALL RIGHTS RESERVED. REPRODUCTION BY ANY METHOD IN WHOLE OR IN PART WITHOUT PERMISSION IS PROHIBITED

Indiana 811
Know what's below. Call before you dig.
Know what's below. 811 before you dig.
1-800-382-5544
(ITS THE LAW)

No.	Submittal / Revision	By	Date

Designed By:	Drawn By:	Checked By:
BW	BW/CH/EK	JH
Issue Date:	Project No:	Scale:
8/2025	S21082	AS SHOWN

EASEMENT PLAN

Drawing No:
G10
Sheet: 10 OF 137

File: Z:\SHARED\IN CLIENTS A-L\KOKOMO\S21082 NORTH SIDE INTERCEPTOR DESIGN\06 CAD\A CURRENT FILES\1 DRAWINGS\03 - S21082 - GENERAL LOCATION PLAN AND CONTROL.DWG
Saved: 8/8/2025 1:03:59 PM Plotted: 8/8/2025 1:04:56 PM Current User: Bryce Persinger LastSavedBy: bpersinger

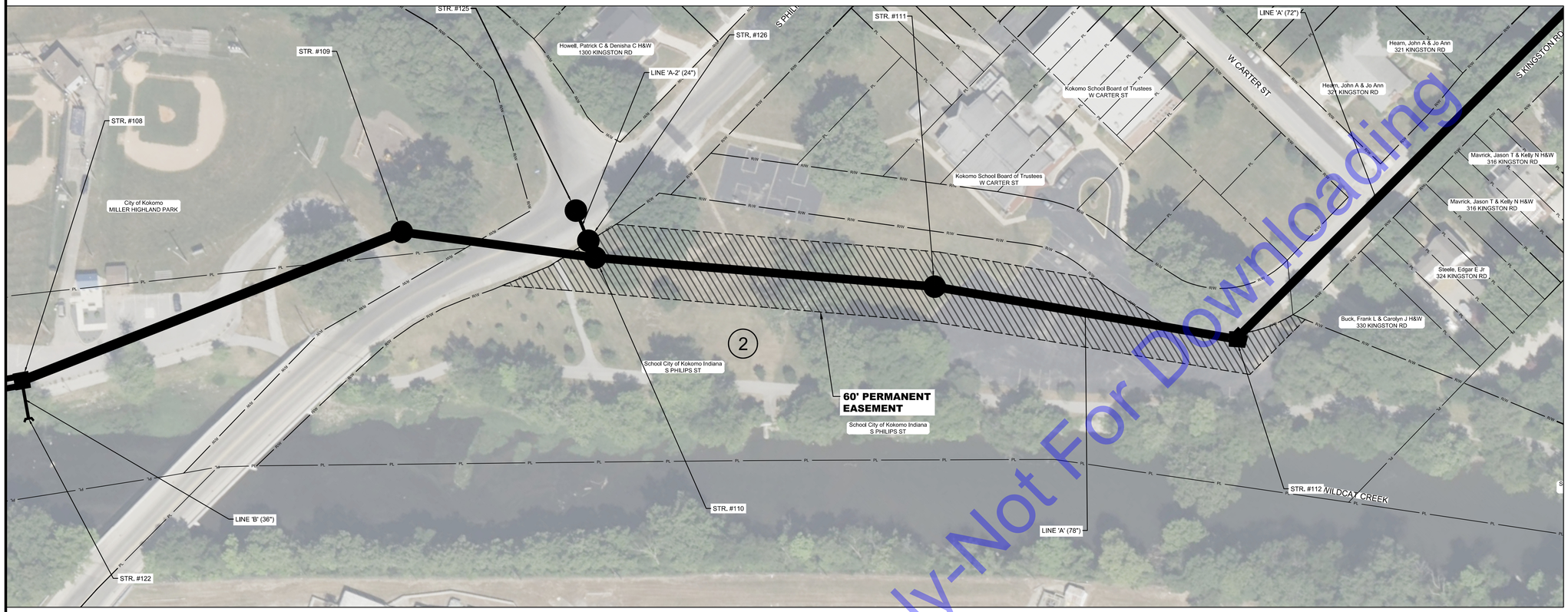

SCALE: 1"=50'

50' 0 50'

EASEMENT PLAN

SCALE: 1"=50'-0"

	NAME	PARCEL NUMBER	EASEMENT ADDRESS	TYPE OF EASEMENT
2	CITY OF KOKOMO INDIANA SCHOOL	34-03-36-302-004.000-002	S. PHILLIPS ST.	60' PERMANENT



EASEMENT PLAN

SCALE: 1"=50'-0"

	NAME	PARCEL NUMBER	EASEMENT ADDRESS	TYPE OF EASEMENT
3	GREGORY K & ELIZABETH A MORRIS	34-03-36-180-010.000-002	915 SUPERIOR ST	PERMANENT

SCALE: 1"=50'

50' 0 50'

For Public Viewing Only-Not For Downloading

COMMONWEALTH ENGINEERS, INC.
A wealth of resources to master a common goal.
https://commonwealthengineers.com/

BRIAN KREED WILSON
REGISTERED
No. PE11900866
STATE OF INDIANA
PROFESSIONAL ENGINEER
Brian Wilson
Signature
8/15/2025
Date

CITY OF KOKOMO, INDIANA
HOWARD COUNTY

NORTH SIDE INTERCEPTOR
IMPROVEMENTS PROJECT

© 2025 BY COMMONWEALTH ENGINEERS, INC. ALL RIGHTS RESERVED. REPRODUCTION BY ANY METHOD IN WHOLE OR IN PART WITHOUT PERMISSION IS PROHIBITED

Know what's below. Call before you dig.
1-800-382-5544 (ITS THE LAW)

No.	Submittal / Revision	By	Date

Designed By:	Drawn By:	Checked By:
BW	BW/CH/EK	JH
Issue Date:	Project No:	Scale:
8/2025	S21082	AS SHOWN

EASEMENT PLAN

Drawing No:
G11
Sheet: 11 OF 137

File: Z:\SHARED\IN CLIENTS A-L\KOKOMO\S21082 NORTH SIDE INTERCEPTOR DESIGN\06 CAD\A CURRENT FILES\1 DRAWINGS\03 - S21082 - GENERAL LOCATION PLAN AND CONTROL.DWG
Saved: 8/12/2025 2:16:08 PM Plotted: 8/13/2025 11:36:59 AM Current User: Brian Waterman LastSavedBy: bwaterman

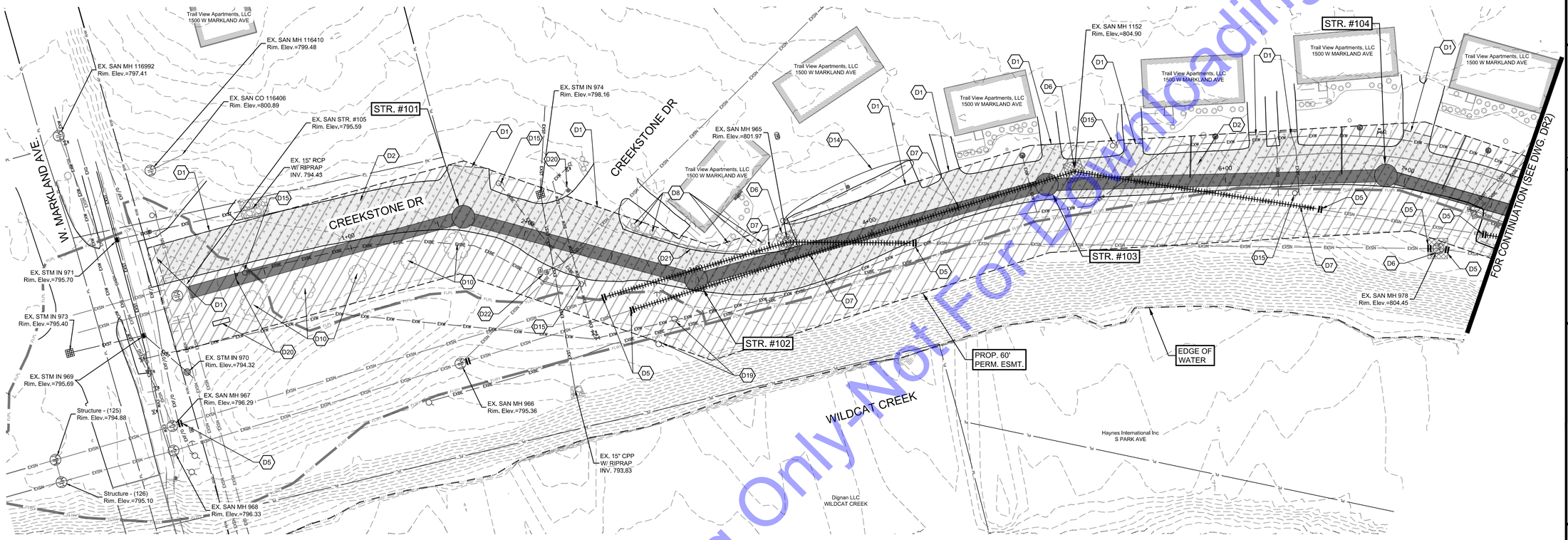

DEMOLITION PLAN

SCALE: 1"=30'-0"

DEMOLITION KEY NOTES

- D1 — CUT EXISTING ASPHALT ALONG THIS LINE TO ACCOMMODATE INSTALLATION OF NEW PAVEMENT AGAINST EXISTING PAVEMENT.
- D2 — REMOVE ASPHALT PAVEMENT/DRIVE/PARKING LOT/PATHWAY.
- D3 — REMOVE CONCRETE PAVEMENT DRIVEWAY.
- D4 — REMOVE CONCRETE WALK TO NEAREST JOINT.
- D5 — CUT AND PLUG EXISTING SANITARY SEWER AT THIS LOCATION.
- D6 — IF ABANDONING, CUT STRUCTURE 5' BELOW GROUND AND FILL WITH FLOWABLE FILL. IF REMOVING, DISPOSE OF LAWFULLY AND PLUG INCOMING PIPES (APPROXIMATE LOCATION SHOWN - VERIFY IN FIELD) - SEE SPECIFICATIONS.
- D7 — REMOVE EXISTING SANITARY SEWER AND DISPOSE OF LAWFULLY.
- D8 — REMOVE EXISTING VEGETATION/LANDSCAPING AS REQUIRED FOR INSTALLATION OF IMPROVEMENTS.
- D9 — REMOVE CURB TO NEAREST JOINT.
- D10 — CLEAR AND REMOVE EXISTING TREES AS NEEDED. SEE SPECIFICATIONS FOR TREE REMOVAL AND REPLACEMENT REQUIREMENTS.
- D11 — EXISTING STORM STRUCTURE TO BE REMOVED & REPLACED AS PART OF CONSTRUCTION ACTIVITIES.
- D12 — REMOVE AND REPLACE EXISTING STORM SEWER PIPE AND DISPOSE OF LAWFULLY.
- D13 — EXISTING HOUSE SHALL BE DEMOLISHED BY CONTRACTOR PRIOR TO CONSTRUCTION OF LINE 'A'. SITE TO BE CLEARED OF ALL DEBRIS AND DISPOSED OF LAWFULLY BEFORE CONSTRUCTION OF LINE 'A'
- D14 — CONTRACTOR TO REMOVE AND STORE EXISTING PARKING BLOCKS PRIOR TO CONSTRUCTION AS NEEDED.
- D15 — EXISTING LIGHT POLE TO BE REMOVED AND REPLACED AS PART OF CONSTRUCTION ACTIVITIES AS NEEDED.
- D16 — EXISTING CROSS WALK POST TO BE REMOVED AND REPLACED AS PART OF CONSTRUCTION ACTIVITIES AS NEEDED.
- D17 — EXISTING GUARDRAIL TO BE REMOVED AND REPLACED AS PART OF CONSTRUCTION ACTIVITIES AS NEEDED.
- D18 — EXISTING BENCH TO BE REMOVED AND REPLACED AS PART OF CONSTRUCTION ACTIVITIES AS NEEDED.
- D19 — CONTRACTOR TO SUPPORT/REMOVE/RELOCATE EXISTING POWER POLES WITH GUIDANCE OF THE POWER COMPANY AS NEEDED.
- D20 — EXISTING SIGN REMOVED AND REPLACED AS PART OF CONSTRUCTION ACTIVITIES AS NEEDED.
- D21 — IF BRICK/RETAINING WALL IS DISTURBED, CONTRACTOR TO REPLACE AS NEEDED AND APPROVED BY ENGINEER AND OWNER.
- D22 — EXISTING TELEPHONE/ FIBER BOXES TO BE RELOCATED WITH GUIDANCE FROM UTILITY'S COMPANY AS NEEDED.
- D23 — REMOVE EXISTING ADA RAMPS AS NEEDED.
- D24 — CONTRACTOR TO REMOVE AND RELOCATE CSO 022 SIGN TO NEW LOCATION.
- D25 — CONTRACTOR TO REMOVE BUS STOP BENCH, STRUCTURE, CURB, SIDEWALK AND ADA RAMP AS NEEDED.
- D26 — CONTRACTOR TO REMOVE AND REPLACE TRAFFIC SIGNAL ITEMS AS NEEDED FOR INTERCEPTOR INSTALLATION INCLUDING, BUT NOT LIMITED TO, TRAFFIC SIGNAL LOOPS, CONDUIT, DETECTOR HOUSINGS, AND WIRING NECESSARY TO RECONNECT THE VEHICLE LOOP DETECTION.

For Purchasing-Not For Downloading
For Purchasing-Viewing Only-Not For Downloading

COMMONWEALTH ENGINEERS, INC.
A wealth of resources to master a common goal.
https://commonwealthengineers.com/

BRIAN KREED WILSON
REGISTERED
No. PE11900866
STATE OF
INDIANA
PROFESSIONAL ENGINEER
Brian Wilson
Signature
8/15/2025
Date

CITY OF KOKOMO, INDIANA
HOWARD COUNTY

NORTH SIDE INTERCEPTOR
IMPROVEMENTS PROJECTS

© 2025 BY COMMONWEALTH ENGINEERS, INC. ALL RIGHTS RESERVED. REPRODUCTION BY ANY METHOD IN WHOLE OR IN PART WITHOUT PERMISSION IS PROHIBITED

Indiana 811
Know what's below. Call before you dig.
1-800-382-5544 (ITS THE LAW)
Know what's below. 811 before you dig.

No.	Submittal / Revision	By	Date

Designed By:	Drawn By:	Checked By:
BW	BW/CH/EK	JH
Issue Date: 8/2025	Project No: S21082	Scale: AS SHOWN

DEMOLITION PLAN

Drawing No: D1

Sheet: 12 OF 137

File: Z:\SHARED\N CLIENTS A-L\KOKOMO\S21082 NORTH SIDE INTERCEPTOR DESIGN\06 CAD\A CURRENT FILES\1 DRAWINGS\04 - S21082 - DEMO AND RESTORATION.DWG
Saved: 8/15/2025 2:28:18 PM Plotted: 8/18/2025 7:53:30 AM Current User: Brian Waterman LastSavedBy: bwaterman

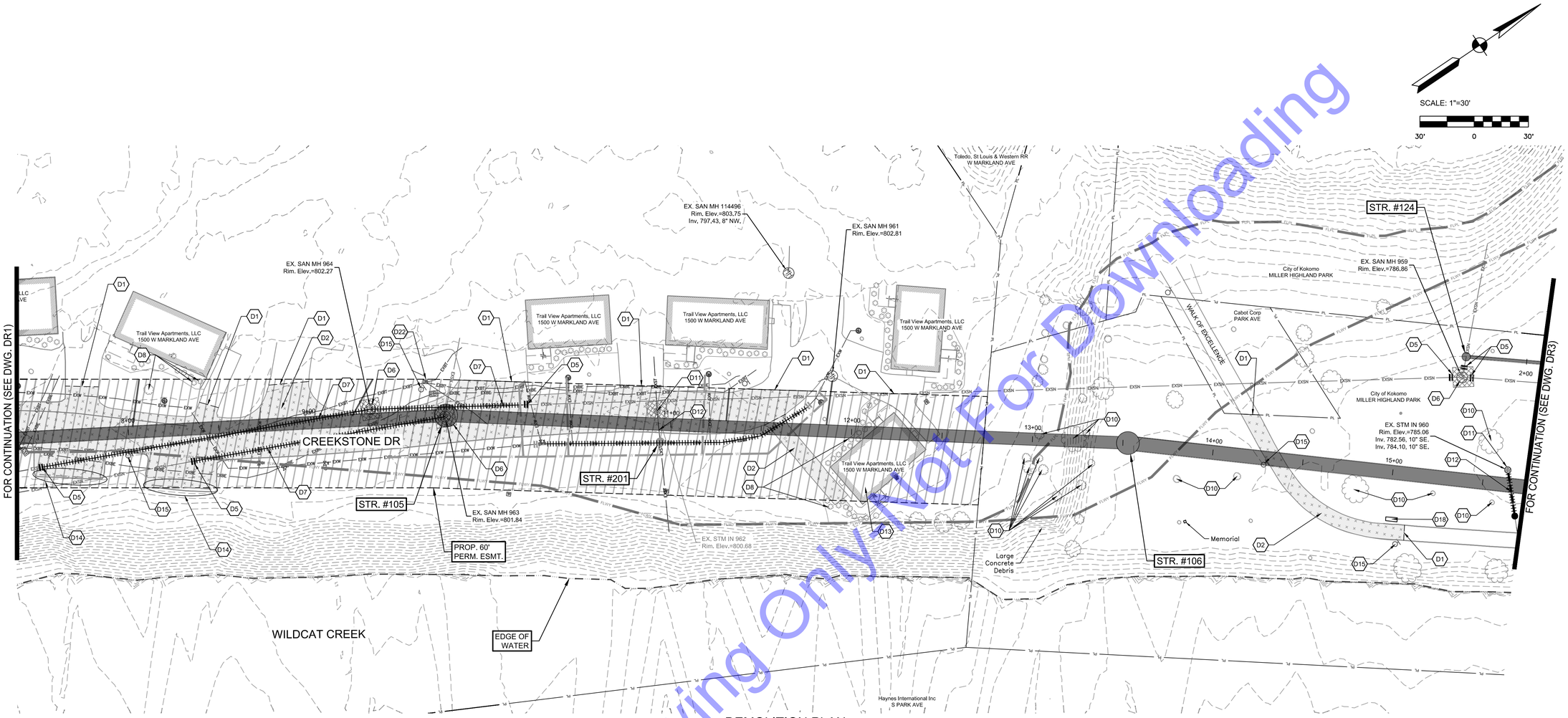

DEMOLITION PLAN

SCALE: 1"=30'-0"

DEMOLITION KEY NOTES

- D1 CUT EXISTING ASPHALT ALONG THIS LINE TO ACCOMMODATE INSTALLATION OF NEW PAVEMENT AGAINST EXISTING PAVEMENT.
- D2 REMOVE ASPHALT PAVEMENT/DRIVE/PARKING LOT/PATHWAY.
- D3 REMOVE CONCRETE PAVEMENT DRIVEWAY.
- D4 REMOVE CONCRETE WALK TO NEAREST JOINT.
- D5 CUT AND PLUG EXISTING SANITARY SEWER AT THIS LOCATION.
- D6 IF ABANDONING, CUT STRUCTURE 5' BELOW GROUND AND FILL WITH FLOWABLE FILL. IF REMOVING, DISPOSE OF LAWFULLY AND PLUG INCOMING PIPES (APPROXIMATE LOCATION SHOWN - VERIFY IN FIELD) - SEE SPECIFICATIONS.
- D7 REMOVE EXISTING SANITARY SEWER AND DISPOSE OF LAWFULLY.
- D8 REMOVE EXISTING VEGETATION/LANDSCAPING AS REQUIRED FOR INSTALLATION OF IMPROVEMENTS.
- D9 REMOVE CURB TO NEAREST JOINT.
- D10 CLEAR AND REMOVE EXISTING TREES AS NEEDED. SEE SPECIFICATIONS FOR TREE REMOVAL AND REPLACEMENT REQUIREMENTS.
- D11 EXISTING STORM STRUCTURE TO BE REMOVED & REPLACED AS PART OF CONSTRUCTION ACTIVITIES.
- D12 REMOVE AND REPLACE EXISTING STORM SEWER PIPE AND DISPOSE OF LAWFULLY.
- D13 EXISTING HOUSE SHALL BE DEMOLISHED BY CONTRACTOR PRIOR TO CONSTRUCTION OF LINE 'A'. SITE TO BE CLEARED OF ALL DEBRIS AND DISPOSED OF LAWFULLY BEFORE CONSTRUCTION OF LINE 'A'
- D14 CONTRACTOR TO REMOVE AND STORE EXISTING PARKING BLOCKS PRIOR TO CONSTRUCTION AS NEEDED.
- D15 EXISTING LIGHT POLE TO BE REMOVED AND REPLACED AS PART OF CONSTRUCTION ACTIVITIES AS NEEDED.
- D16 EXISTING CROSS WALK POST TO BE REMOVED AND REPLACED AS PART OF CONSTRUCTION ACTIVITIES AS NEEDED.
- D17 EXISTING GUARDRAIL TO BE REMOVED AND REPLACED AS PART OF CONSTRUCTION ACTIVITIES AS NEEDED.
- D18 EXISTING BENCH TO BE REMOVED AND REPLACED AS PART OF CONSTRUCTION ACTIVITIES AS NEEDED.
- D19 CONTRACTOR TO SUPPORT/REMOVE/RELOCATE EXISTING POWER POLES WITH GUIDANCE OF THE POWER COMPANY AS NEEDED.
- D20 EXISTING SIGN REMOVED AND REPLACED AS PART OF CONSTRUCTION ACTIVITIES AS NEEDED.
- D21 IF BRICK/RETAINING WALL IS DISTURBED, CONTRACTOR TO REPLACE AS NEEDED AND APPROVED BY ENGINEER AND OWNER.
- D22 EXISTING TELEPHONE/ FIBER BOXES TO BE RELOCATED WITH GUIDANCE FROM UTILITY'S COMPANY AS NEEDED.
- D23 REMOVE EXISTING ADA RAMPS AS NEEDED.
- D24 CONTRACTOR TO REMOVE AND RELOCATE CSO 022 SIGN TO NEW LOCATION.
- D25 CONTRACTOR TO REMOVE BUS STOP BENCH, STRUCTURE, CURB, SIDEWALK AND ADA RAMP AS NEEDED.
- D26 CONTRACTOR TO REMOVE AND REPLACE TRAFFIC SIGNAL ITEMS AS NEEDED FOR INTERCEPTOR INSTALLATION INCLUDING, BUT NOT LIMITED TO, TRAFFIC SIGNAL LOOPS, CONDUIT, DETECTOR HOUSINGS, AND WIRING NECESSARY TO RECONNECT THE VEHICLE LOOP DETECTION.

For Public Viewing Only Not For Downloading

COMMONWEALTH ENGINEERS, INC.
A wealth of resources to master a common goal.
https://commonwealthengineers.com/

BRIAN KREED WILSON
REGISTERED
No. PE11900866
STATE OF INDIANA
PROFESSIONAL ENGINEER

Brian Wilson
Signature

8/15/2025
Date

CITY OF KOKOMO, INDIANA
HOWARD COUNTY

NORTH SIDE INTERCEPTOR
IMPROVEMENTS PROJECT

© 2025 BY COMMONWEALTH ENGINEERS, INC. ALL RIGHTS RESERVED. REPRODUCTION BY ANY METHOD IN WHOLE OR IN PART WITHOUT PERMISSION IS PROHIBITED

Know what's below. Call before you dig.
1-800-382-5544 (ITS THE LAW)

No.	Submittal / Revision	By	Date

Designed By:	Drawn By:	Checked By:
BW	BW/CH/EK	JH
Issue Date: 8/2025	Project No: S21082	Scale: AS SHOWN

DEMOLITION PLAN

Drawing No: D2

Sheet: 13 OF 137

File: Z:\SHARED\IN CLIENTS A-L\OKOMO\S21082 NORTH SIDE INTERCEPTOR DESIGN\06 CAD\A CURRENT FILES\1 DRAWINGS\04 - S21082 - DEMO AND RESTORATION.DWG
Saved: 8/15/2025 2:28:18 PM Plotted: 8/18/2025 7:55:03 AM Current User: Brian Waterman LastSavedBy: bwaterman

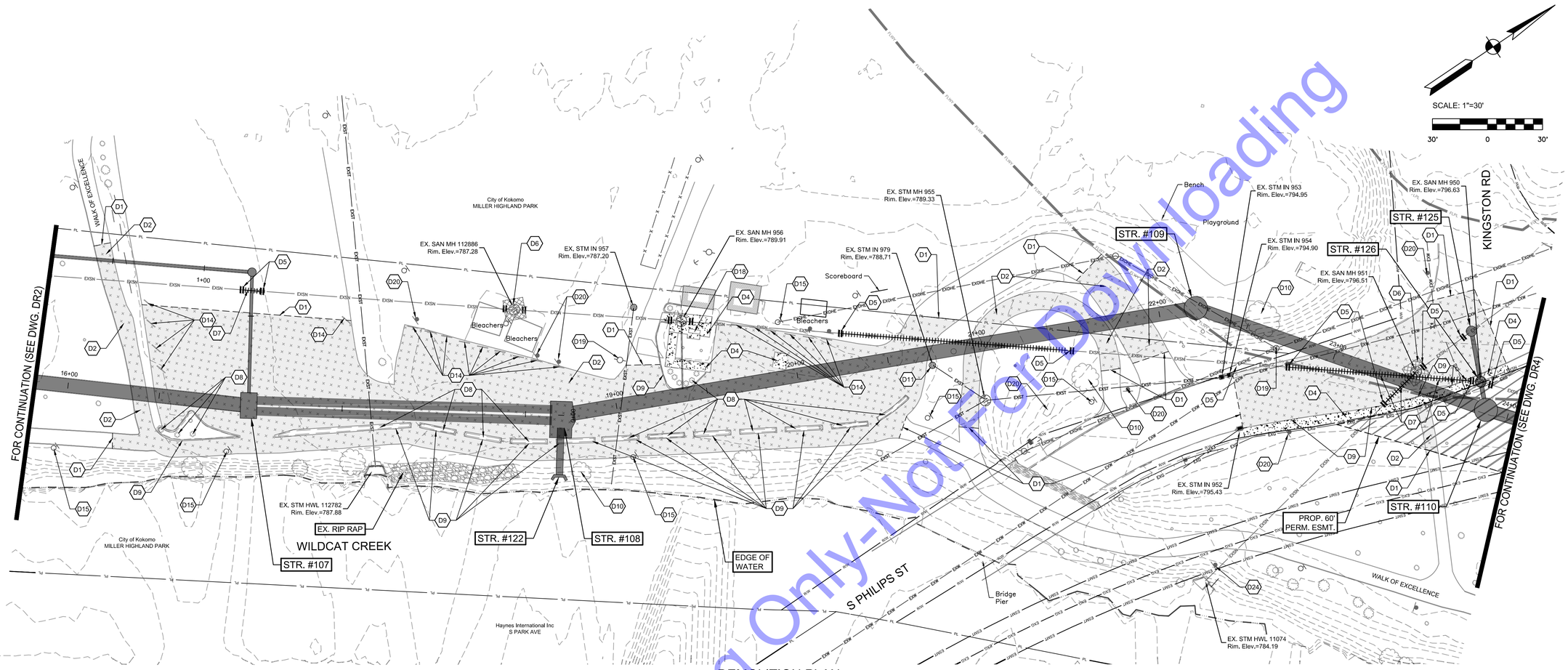

DEMOLITION PLAN
SCALE: 1"=30'-0"

DEMOLITION KEY NOTES

- D1 CUT EXISTING ASPHALT ALONG THIS LINE TO ACCOMMODATE INSTALLATION OF NEW PAVEMENT AGAINST EXISTING PAVEMENT.
- D2 REMOVE ASPHALT PAVEMENT/DRIVE/PARKING LOT/PATHWAY.
- D3 REMOVE CONCRETE PAVEMENT DRIVEWAY.
- D4 REMOVE CONCRETE WALK TO NEAREST JOINT.
- D5 CUT AND PLUG EXISTING SANITARY SEWER AT THIS LOCATION.
- D6 IF ABANDONING, CUT STRUCTURE 5' BELOW GROUND AND FILL WITH FLOWABLE FILL. IF REMOVING, DISPOSE OF LAWFULLY AND PLUG INCOMING PIPES (APPROXIMATE LOCATION SHOWN - VERIFY IN FIELD) - SEE SPECIFICATIONS.
- D7 REMOVE EXISTING SANITARY SEWER AND DISPOSE OF LAWFULLY.
- D8 REMOVE EXISTING VEGETATION/LANDSCAPING AS REQUIRED FOR INSTALLATION OF IMPROVEMENTS.
- D9 REMOVE CURB TO NEAREST JOINT.
- D10 CLEAR AND REMOVE EXISTING TREES AS NEEDED. SEE SPECIFICATIONS FOR TREE REMOVAL AND REPLACEMENT REQUIREMENTS.
- D11 EXISTING STORM STRUCTURE TO BE REMOVED & REPLACED AS PART OF CONSTRUCTION ACTIVITIES.
- D12 REMOVE AND REPLACE EXISTING STORM SEWER PIPE AND DISPOSE OF LAWFULLY.
- D13 EXISTING HOUSE SHALL BE DEMOLISHED BY CONTRACTOR PRIOR TO CONSTRUCTION OF LINE 'A'. SITE TO BE CLEARED OF ALL DEBRIS AND DISPOSED OF LAWFULLY BEFORE CONSTRUCTION OF LINE 'A'
- D14 CONTRACTOR TO REMOVE AND STORE EXISTING PARKING BLOCKS PRIOR TO CONSTRUCTION AS NEEDED.
- D15 EXISTING LIGHT POLE TO BE REMOVED AND REPLACED AS PART OF CONSTRUCTION ACTIVITIES AS NEEDED.
- D16 EXISTING CROSS WALK POST TO BE REMOVED AND REPLACED AS PART OF CONSTRUCTION ACTIVITIES AS NEEDED.
- D17 EXISTING GUARDRAIL TO BE REMOVED AND REPLACED AS PART OF CONSTRUCTION ACTIVITIES AS NEEDED.
- D18 EXISTING BENCH TO BE REMOVED AND REPLACED AS PART OF CONSTRUCTION ACTIVITIES AS NEEDED.
- D19 CONTRACTOR TO SUPPORT/REMOVE/RELOCATE EXISTING POWER POLES WITH GUIDANCE OF THE POWER COMPANY AS NEEDED.
- D20 EXISTING SIGN REMOVED AND REPLACED AS PART OF CONSTRUCTION ACTIVITIES AS NEEDED.
- D21 IF BRICK/RETAINING WALL IS DISTURBED, CONTRACTOR TO REPLACE AS NEEDED AND APPROVED BY ENGINEER AND OWNER.
- D22 EXISTING TELEPHONE/ FIBER BOXES TO BE RELOCATED WITH GUIDANCE FROM UTILITY'S COMPANY AS NEEDED.
- D23 REMOVE EXISTING ADA RAMPS AS NEEDED.
- D24 CONTRACTOR TO REMOVE AND RELOCATE CSO 022 SIGN TO NEW LOCATION.
- D25 CONTRACTOR TO REMOVE BUS STOP BENCH, STRUCTURE, CURB, SIDEWALK AND ADA RAMP AS NEEDED.
- D26 CONTRACTOR TO REMOVE AND REPLACE TRAFFIC SIGNAL ITEMS AS NEEDED FOR INTERCEPTOR INSTALLATION INCLUDING, BUT NOT LIMITED TO, TRAFFIC SIGNAL LOOPS, CONDUIT, DETECTOR HOUSINGS, AND WIRING NECESSARY TO RECONNECT THE VEHICLE LOOP DETECTION.

For Public Viewing Only-Not For Downloading

COMMONWEALTH ENGINEERS, INC.
A wealth of resources to master a common goal.
https://commonwealthengineers.com/

BRIAN KREED WILSON
REGISTERED
No. PE11900866
STATE OF INDIANA
PROFESSIONAL ENGINEER
Brian Wilson 8/15/2025
Signature Date

CITY OF KOKOMO, INDIANA
HOWARD COUNTY

NORTH SIDE INTERCEPTOR
IMPROVEMENTS PROJECT

© 2025 BY COMMONWEALTH ENGINEERS, INC. ALL RIGHTS RESERVED. REPRODUCTION BY ANY METHOD IN WHOLE OR IN PART WITHOUT PERMISSION IS PROHIBITED

Indiana 811 Know what's below. Call before you dig.
Know what's below. 811 before you dig. 1-800-382-5544 (ITS THE LAW)

No.	Submittal / Revision	By	Date

Designed By:	Drawn By:	Checked By:
BW	BW/CH/EK	JH
Issue Date: 8/2025	Project No: S21082	Scale: AS SHOWN

DEMOLITION PLAN

Drawing No: D3

Sheet: 14 OF 137

File: Z:\SHARED\IN CLIENTS A-L\KOKOMO\S21082 NORTH SIDE INTERCEPTOR DESIGN\06 CAD\A CURRENT FILES\1 DRAWINGS\04 - S21082 - DEMO AND RESTORATION.DWG
Saved: 8/18/2025 4:19:48 PM Plotted: 8/18/2025 4:22:04 PM Current User: Brian Waterman LastSavedBy: bwaterman

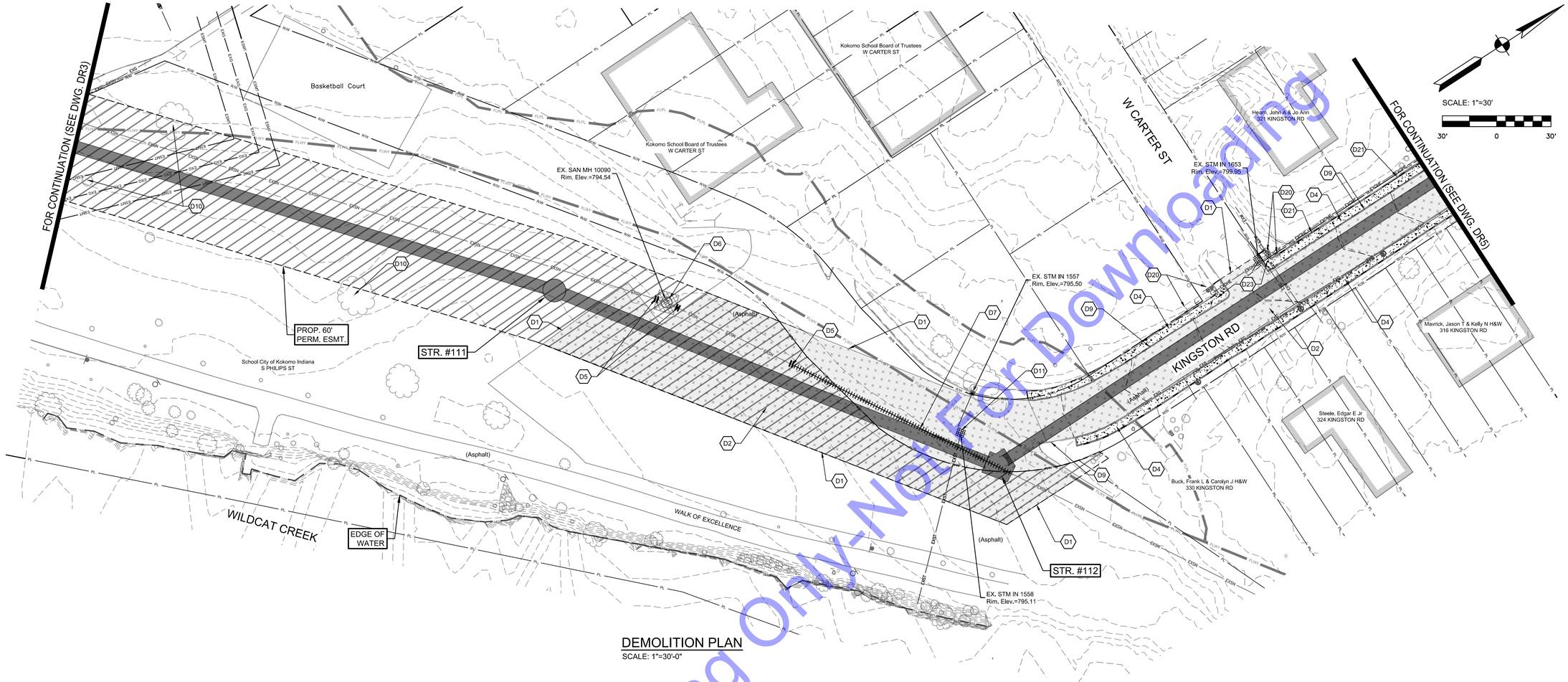

DEMOLITION PLAN

SCALE: 1"=30'-0"

DEMOLITION KEY NOTES

- D1 — CUT EXISTING ASPHALT ALONG THIS LINE TO ACCOMMODATE INSTALLATION OF NEW PAVEMENT AGAINST EXISTING PAVEMENT.
- D2 — REMOVE ASPHALT PAVEMENT/DRIVE/PARKING LOT/PATHWAY.
- D3 — REMOVE CONCRETE PAVEMENT DRIVEWAY.
- D4 — REMOVE CONCRETE WALK TO NEAREST JOINT.
- D5 — CUT AND PLUG EXISTING SANITARY SEWER AT THIS LOCATION.
- D6 — IF ABANDONING, CUT STRUCTURE 5' BELOW GROUND AND FILL WITH FLOWABLE FILL. IF REMOVING, DISPOSE OF LAWFULLY AND PLUG INCOMING PIPES (APPROXIMATE LOCATION SHOWN - VERIFY IN FIELD) - SEE SPECIFICATIONS.
- D7 — REMOVE EXISTING SANITARY SEWER AND DISPOSE OF LAWFULLY.
- D8 — REMOVE EXISTING VEGETATION/LANDSCAPING AS REQUIRED FOR INSTALLATION OF IMPROVEMENTS.
- D9 — REMOVE CURB TO NEAREST JOINT.
- D10 — CLEAR AND REMOVE EXISTING TREES AS NEEDED. SEE SPECIFICATIONS FOR TREE REMOVAL AND REPLACEMENT REQUIREMENTS.
- D11 — EXISTING STORM STRUCTURE TO BE REMOVED & REPLACED AS PART OF CONSTRUCTION ACTIVITIES.
- D12 — REMOVE AND REPLACE EXISTING STORM SEWER PIPE AND DISPOSE OF LAWFULLY.
- D13 — EXISTING HOUSE SHALL BE DEMOLISHED BY CONTRACTOR PRIOR TO CONSTRUCTION OF LINE 'A'. SITE TO BE CLEARED OF ALL DEBRIS AND DISPOSED OF LAWFULLY BEFORE CONSTRUCTION OF LINE 'A'
- D14 — CONTRACTOR TO REMOVE AND STORE EXISTING PARKING BLOCKS PRIOR TO CONSTRUCTION AS NEEDED.
- D15 — EXISTING LIGHT POLE TO BE REMOVED AND REPLACED AS PART OF CONSTRUCTION ACTIVITIES AS NEEDED.
- D16 — EXISTING CROSS WALK POST TO BE REMOVED AND REPLACED AS PART OF CONSTRUCTION ACTIVITIES AS NEEDED.
- D17 — EXISTING GUARDRAIL TO BE REMOVED AND REPLACED AS PART OF CONSTRUCTION ACTIVITIES AS NEEDED.
- D18 — EXISTING BENCH TO BE REMOVED AND REPLACED AS PART OF CONSTRUCTION ACTIVITIES AS NEEDED.
- D19 — CONTRACTOR TO SUPPORT/REMOVE/RELOCATE EXISTING POWER POLES WITH GUIDANCE OF THE POWER COMPANY AS NEEDED.
- D20 — EXISTING SIGN REMOVED AND REPLACED AS PART OF CONSTRUCTION ACTIVITIES AS NEEDED.
- D21 — IF BRICK/RETAINING WALL IS DISTURBED, CONTRACTOR TO REPLACE AS NEEDED AND APPROVED BY ENGINEER AND OWNER.
- D22 — EXISTING TELEPHONE/ FIBER BOXES TO BE RELOCATED WITH GUIDANCE FROM UTILITY'S COMPANY AS NEEDED.
- D23 — REMOVE EXISTING ADA RAMPS AS NEEDED.
- D24 — CONTRACTOR TO REMOVE AND RELOCATE CSO 022 SIGN TO NEW LOCATION.
- D25 — CONTRACTOR TO REMOVE BUS STOP BENCH, STRUCTURE, CURB, SIDEWALK AND ADA RAMP AS NEEDED.
- D26 — CONTRACTOR TO REMOVE AND REPLACE TRAFFIC SIGNAL ITEMS AS NEEDED FOR INTERCEPTOR INSTALLATION INCLUDING, BUT NOT LIMITED TO, TRAFFIC SIGNAL LOOPS, CONDUIT, DETECTOR HOUSINGS, AND WIRING NECESSARY TO RECONNECT THE VEHICLE LOOP DETECTION.

For Public Viewing Only-Not For Downloading

COMMONWEALTH ENGINEERS, INC.
A wealth of resources to master a common goal.
https://commonwealthengineers.com/

BRIAN KREED WILSON
REGISTERED
No. PE11900866
STATE OF
INDIANA
PROFESSIONAL ENGINEER
Brian Wilson
Signature
8/15/2025
Date

CITY OF KOKOMO, INDIANA
HOWARD COUNTY

NORTH SIDE INTERCEPTOR
IMPROVEMENTS PROJECT

© 2025 BY COMMONWEALTH ENGINEERS, INC. ALL RIGHTS RESERVED. REPRODUCTION BY ANY METHOD IN WHOLE OR IN PART WITHOUT PERMISSION IS PROHIBITED

Indiana 811
Know what's below. Call before you dig.
Know what's below. 811 before you dig.
1-800-382-5544
(ITS THE LAW)

No.	Submittal / Revision	By	Date

Designed By:	Drawn By:	Checked By:
BW	BW/CH/EK	JH
Issue Date: 8/2025	Project No: S21082	Scale: AS SHOWN

DEMOLITION PLAN

Drawing No:
D4
Sheet: 15 OF 137

File: Z:\SHARED\IN CLIENTS A-L\KOKOMO\S21082 NORTH SIDE INTERCEPTOR DESIGN\06 CAD\A CURRENT FILES\1 DRAWINGS\04 - S21082 - DEMO AND RESTORATION.DWG
Saved: 8/15/2025 2:28:18 PM Plotted: 8/18/2025 7:58:34 AM Current User: Brian Waterman LastSavedBy: bwaterman

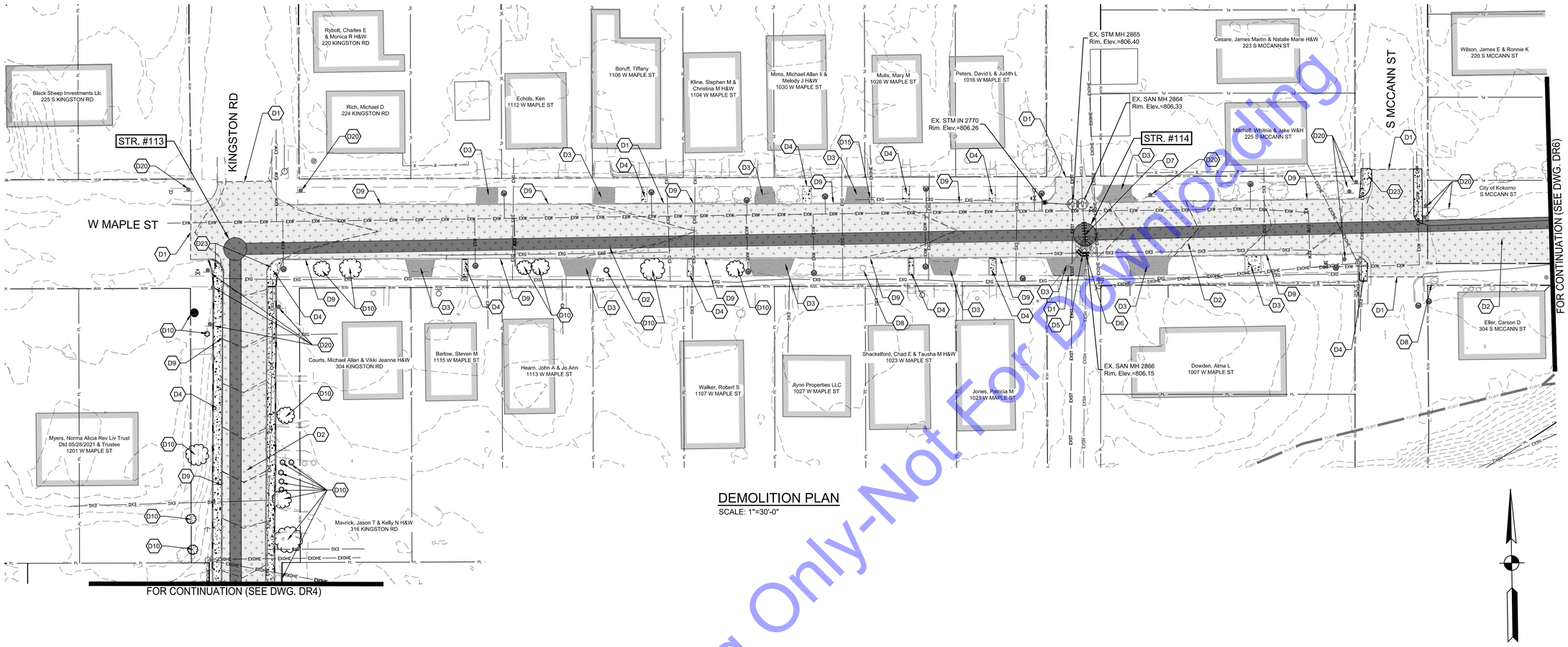

DEMOLITION PLAN
SCALE: 1"=30'-0"

SCALE: 1"=30'

30' 0 30'

DEMOLITION KEY NOTES

- D1 — CUT EXISTING ASPHALT ALONG THIS LINE TO ACCOMMODATE INSTALLATION OF NEW PAVEMENT AGAINST EXISTING PAVEMENT.
- D2 — REMOVE ASPHALT PAVEMENT/DRIVE/PARKING LOT/PATHWAY.
- D3 — REMOVE CONCRETE PAVEMENT DRIVEWAY.
- D4 — REMOVE CONCRETE WALK TO NEAREST JOINT.
- D5 — CUT AND PLUG EXISTING SANITARY SEWER AT THIS LOCATION.
- D6 — IF ABANDONING, CUT STRUCTURE 5' BELOW GROUND AND FILL WITH FLOWABLE FILL. IF REMOVING, DISPOSE OF LAWFULLY AND PLUG INCOMING PIPES (APPROXIMATE LOCATION SHOWN - VERIFY IN FIELD) - SEE SPECIFICATIONS.
- D7 — REMOVE EXISTING SANITARY SEWER AND DISPOSE OF LAWFULLY.
- D8 — REMOVE EXISTING VEGETATION/LANDSCAPING AS REQUIRED FOR INSTALLATION OF IMPROVEMENTS.
- D9 — REMOVE CURB TO NEAREST JOINT.
- D10 — CLEAR AND REMOVE EXISTING TREES AS NEEDED. SEE SPECIFICATIONS FOR TREE REMOVAL AND REPLACEMENT REQUIREMENTS.
- D11 — EXISTING STORM STRUCTURE TO BE REMOVED & REPLACED AS PART OF CONSTRUCTION ACTIVITIES.
- D12 — REMOVE AND REPLACE EXISTING STORM SEWER PIPE AND DISPOSE OF LAWFULLY.
- D13 — EXISTING HOUSE SHALL BE DEMOLISHED BY CONTRACTOR PRIOR TO CONSTRUCTION OF LINE 'A'. SITE TO BE CLEARED OF ALL DEBRIS AND DISPOSED OF LAWFULLY BEFORE CONSTRUCTION OF LINE 'A'
- D14 — CONTRACTOR TO REMOVE AND STORE EXISTING PARKING BLOCKS PRIOR TO CONSTRUCTION AS NEEDED.
- D15 — EXISTING LIGHT POLE TO BE REMOVED AND REPLACED AS PART OF CONSTRUCTION ACTIVITIES AS NEEDED.
- D16 — EXISTING CROSS WALK POST TO BE REMOVED AND REPLACED AS PART OF CONSTRUCTION ACTIVITIES AS NEEDED.
- D17 — EXISTING GUARDRAIL TO BE REMOVED AND REPLACED AS PART OF CONSTRUCTION ACTIVITIES AS NEEDED.
- D18 — EXISTING BENCH TO BE REMOVED AND REPLACED AS PART OF CONSTRUCTION ACTIVITIES AS NEEDED.
- D19 — CONTRACTOR TO SUPPORT/REMOVE/RELOCATE EXISTING POWER POLES WITH GUIDANCE OF THE POWER COMPANY AS NEEDED.
- D20 — EXISTING SIGN REMOVED AND REPLACED AS PART OF CONSTRUCTION ACTIVITIES AS NEEDED.
- D21 — IF BRICK/RETAINING WALL IS DISTURBED, CONTRACTOR TO REPLACE AS NEEDED AND APPROVED BY ENGINEER AND OWNER.
- D22 — EXISTING TELEPHONE/ FIBER BOXES TO BE RELOCATED WITH GUIDANCE FROM UTILITY'S COMPANY AS NEEDED.
- D23 — REMOVE EXISTING ADA RAMPS AS NEEDED.
- D24 — CONTRACTOR TO REMOVE AND RELOCATE CSO 022 SIGN TO NEW LOCATION.
- D25 — CONTRACTOR TO REMOVE BUS STOP BENCH, STRUCTURE, CURB, SIDEWALK AND ADA RAMP AS NEEDED.
- D26 — CONTRACTOR TO REMOVE AND REPLACE TRAFFIC SIGNAL ITEMS AS NEEDED FOR INTERCEPTOR INSTALLATION INCLUDING, BUT NOT LIMITED TO, TRAFFIC SIGNAL LOOPS, CONDUIT, DETECTOR HOUSINGS, AND WIRING NECESSARY TO RECONNECT THE VEHICLE LOOP DETECTION.

For Public Viewing Only-Not For Downloading

COMMONWEALTH ENGINEERS, INC.
A wealth of resources to master a common goal.
https://commonwealthengineers.com/

BRIAN KREED WILSON
REGISTERED
No. PE11900866
STATE OF INDIANA
PROFESSIONAL ENGINEER
Brian Wilson 8/15/2025
Signature Date

CITY OF KOKOMO, INDIANA
HOWARD COUNTY

NORTH SIDE INTERCEPTOR
IMPROVEMENTS PROJECT

© 2025 BY COMMONWEALTH ENGINEERS, INC. ALL RIGHTS RESERVED. REPRODUCTION BY ANY METHOD IN WHOLE OR IN PART WITHOUT PERMISSION IS PROHIBITED

Indiana 811 Know what's below. Call before you dig.
Know what's below. 811 before you dig.
1-800-382-5544 (ITS THE LAW)

No.	Submittal / Revision	By	Date

Designed By:	Drawn By:	Checked By:
BW	BW/CH/EK	JH
Issue Date: 8/2025	Project No: S21082	Scale: AS SHOWN

DEMOLITION PLAN

Drawing No: D5
Sheet: 16 OF 137

File: Z:\SHARED\IN CLIENTS A-L\KOKOMO\S21082 NORTH SIDE INTERCEPTOR DESIGN\06 CAD\A CURRENT FILES\1 DRAWINGS\04 - S21082 - DEMO AND RESTORATION.DWG
Saved: 8/15/2025 2:28:18 PM Plotted: 8/18/2025 8:00:19 AM Current User: Brian Waterman LastSavedBy: bwaterman

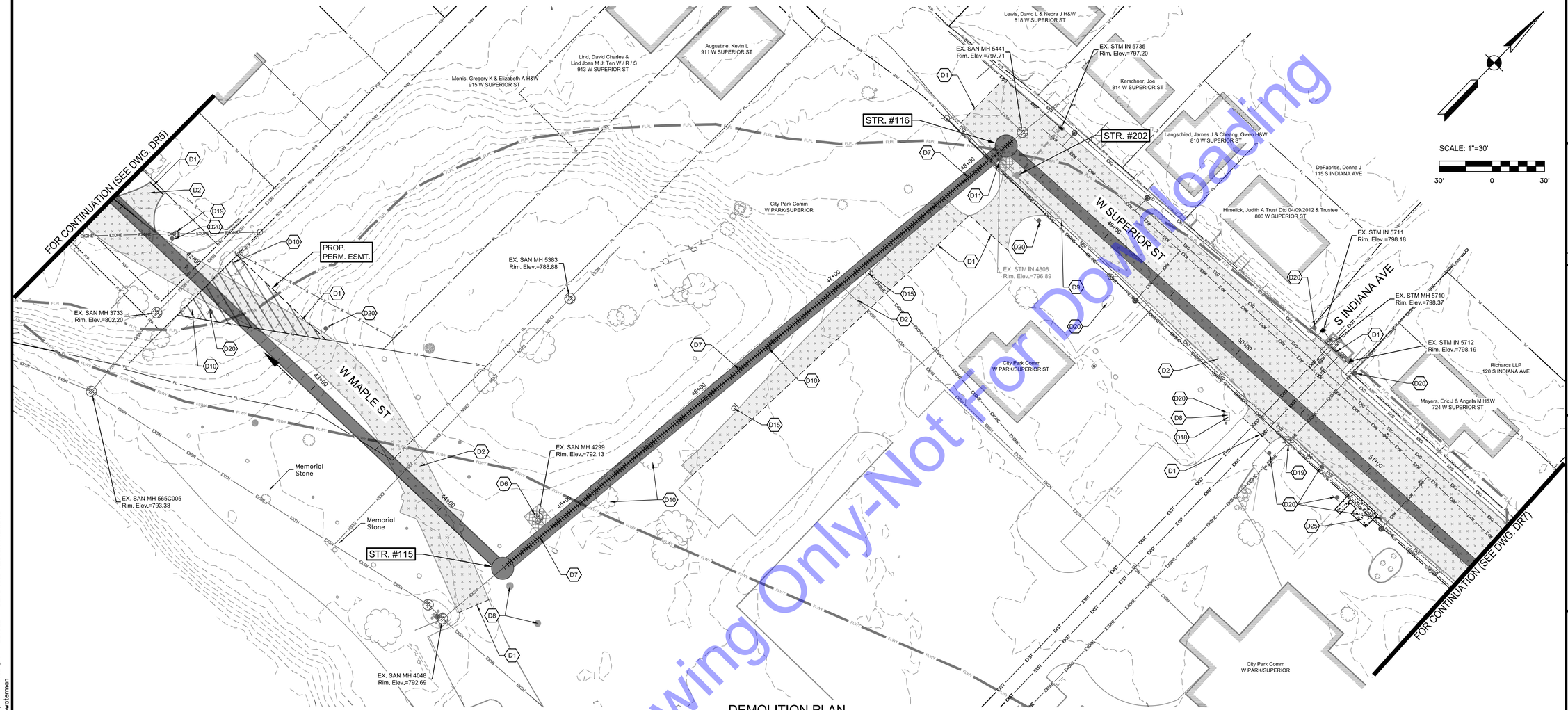

DEMOLITION KEY NOTES

- D1 — CUT EXISTING ASPHALT ALONG THIS LINE TO ACCOMMODATE INSTALLATION OF NEW PAVEMENT AGAINST EXISTING PAVEMENT.
- D2 — REMOVE ASPHALT PAVEMENT/DRIVE/PARKING LOT/PATHWAY.
- D3 — REMOVE CONCRETE PAVEMENT DRIVEWAY.
- D4 — REMOVE CONCRETE WALK TO NEAREST JOINT.
- D5 — CUT AND PLUG EXISTING SANITARY SEWER AT THIS LOCATION.
- D6 — IF ABANDONING, CUT STRUCTURE 5' BELOW GROUND AND FILL WITH FLOWABLE FILL. IF REMOVING, DISPOSE OF LAWFULLY AND PLUG INCOMING PIPES (APPROXIMATE LOCATION SHOWN - VERIFY IN FIELD) - SEE SPECIFICATIONS.
- D7 — REMOVE EXISTING SANITARY SEWER AND DISPOSE OF LAWFULLY.
- D8 — REMOVE EXISTING VEGETATION/LANDSCAPING AS REQUIRED FOR INSTALLATION OF IMPROVEMENTS.
- D9 — REMOVE CURB TO NEAREST JOINT.
- D10 — CLEAR AND REMOVE EXISTING TREES AS NEEDED. SEE SPECIFICATIONS FOR TREE REMOVAL AND REPLACEMENT REQUIREMENTS.
- D11 — EXISTING STORM STRUCTURE TO BE REMOVED & REPLACED AS PART OF CONSTRUCTION ACTIVITIES.
- D12 — REMOVE AND REPLACE EXISTING STORM SEWER PIPE AND DISPOSE OF LAWFULLY.
- D13 — EXISTING HOUSE SHALL BE DEMOLISHED BY CONTRACTOR PRIOR TO CONSTRUCTION OF LINE 'A'. SITE TO BE CLEARED OF ALL DEBRIS AND DISPOSED OF LAWFULLY BEFORE CONSTRUCTION OF LINE 'A'
- D14 — CONTRACTOR TO REMOVE AND STORE EXISTING PARKING BLOCKS PRIOR TO CONSTRUCTION AS NEEDED.

DEMOLITION PLAN

SCALE: 1"=30'-0"

- D15 — EXISTING LIGHT POLE TO BE REMOVED AND REPLACED AS PART OF CONSTRUCTION ACTIVITIES AS NEEDED.
- D16 — EXISTING CROSS WALK POST TO BE REMOVED AND REPLACED AS PART OF CONSTRUCTION ACTIVITIES AS NEEDED.
- D17 — EXISTING GUARDRAIL TO BE REMOVED AND REPLACED AS PART OF CONSTRUCTION ACTIVITIES AS NEEDED.
- D18 — EXISTING BENCH TO BE REMOVED AND REPLACED AS PART OF CONSTRUCTION ACTIVITIES AS NEEDED.
- D19 — CONTRACTOR TO SUPPORT/REMOVE/RELOCATE EXISTING POWER POLES WITH GUIDANCE OF THE POWER COMPANY AS NEEDED.
- D20 — EXISTING SIGN REMOVED AND REPLACED AS PART OF CONSTRUCTION ACTIVITIES AS NEEDED.
- D21 — IF BRICK/RETAINING WALL IS DISTURBED, CONTRACTOR TO REPLACE AS NEEDED AND APPROVED BY ENGINEER AND OWNER.
- D22 — EXISTING TELEPHONE/ FIBER BOXES TO BE RELOCATED WITH GUIDANCE FROM UTILITY'S COMPANY AS NEEDED.
- D23 — REMOVE EXISTING ADA RAMPS AS NEEDED.
- D24 — CONTRACTOR TO REMOVE AND RELOCATE CSO 022 SIGN TO NEW LOCATION.
- D25 — CONTRACTOR TO REMOVE BUS STOP BENCH, STRUCTURE, CURB, SIDEWALK AND ADA RAMP AS NEEDED.
- D26 — CONTRACTOR TO REMOVE AND REPLACE TRAFFIC SIGNAL ITEMS AS NEEDED FOR INTERCEPTOR INSTALLATION INCLUDING, BUT NOT LIMITED TO, TRAFFIC SIGNAL LOOPS, CONDUIT, DETECTOR HOUSINGS, AND WIRING NECESSARY TO RECONNECT THE VEHICLE LOOP DETECTION.



TYPICAL EXISTING BUS STOP REFERENCE PICTURE

For Public Viewing Only-Not For Downloading

COMMONWEALTH ENGINEERS, INC.
A wealth of resources to master a common goal.
https://commonwealthengineers.com/

BRIAN KREED WILSON
REGISTERED
No. PE11900866
STATE OF INDIANA
PROFESSIONAL ENGINEER
Brian Wilson
Signature 8/15/2025 Date

CITY OF KOKOMO, INDIANA
HOWARD COUNTY

NORTH SIDE INTERCEPTOR IMPROVEMENTS PROJECT

© 2025 BY COMMONWEALTH ENGINEERS, INC. ALL RIGHTS RESERVED. REPRODUCTION BY ANY METHOD IN WHOLE OR IN PART WITHOUT PERMISSION IS PROHIBITED

Know what's below. Call before you dig. 811 Indiana
Know what's below. 811 before you dig.
1-800-382-5544 (ITS THE LAW)

No.	Submittal / Revision	By	Date

Designed By:	Drawn By:	Checked By:
BW	BW/CH/EK	JH
Issue Date: 8/2025	Project No: S21082	Scale: AS SHOWN

DEMOLITION PLAN

Drawing No: D6
Sheet: 17 OF 137

File: Z:\SHARED\IN CLIENTS A-L\KOKOMO\S21082 NORTH SIDE INTERCEPTOR DESIGN\06 CAD\A CURRENT FILES\1 DRAWINGS\04 - S21082 - DEMO AND RESTORATION.DWG
Saved: 8/15/2025 2:28:18 PM Plotted: 8/18/2025 8:02:08 AM Current User: Brian Waterman LastSavedBy: bwaterman

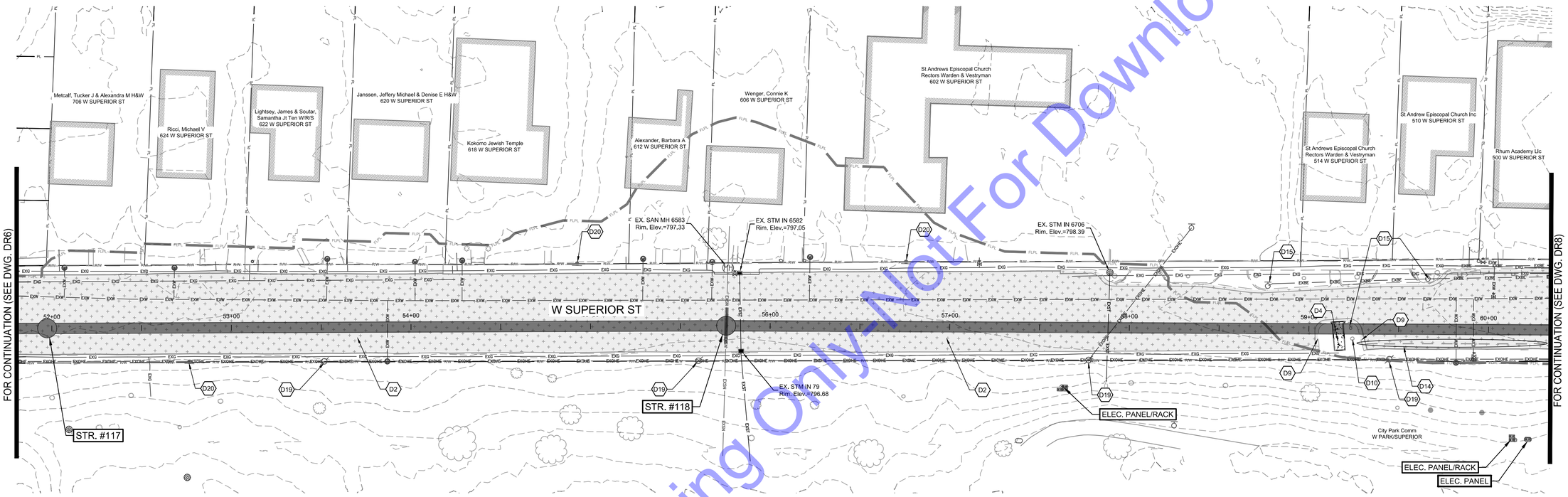

DEMOLITION PLAN

SCALE: 1"=30'-0"

DEMOLITION KEY NOTES

- D1 CUT EXISTING ASPHALT ALONG THIS LINE TO ACCOMMODATE INSTALLATION OF NEW PAVEMENT AGAINST EXISTING PAVEMENT.
- D2 REMOVE ASPHALT PAVEMENT/DRIVE/PARKING LOT/PATHWAY.
- D3 REMOVE CONCRETE PAVEMENT DRIVEWAY.
- D4 REMOVE CONCRETE WALK TO NEAREST JOINT.
- D5 CUT AND PLUG EXISTING SANITARY SEWER AT THIS LOCATION.
- D6 IF ABANDONING, CUT STRUCTURE 5' BELOW GROUND AND FILL WITH FLOWABLE FILL. IF REMOVING, DISPOSE OF LAWFULLY AND PLUG INCOMING PIPES (APPROXIMATE LOCATION SHOWN - VERIFY IN FIELD) - SEE SPECIFICATIONS.
- D7 REMOVE EXISTING SANITARY SEWER AND DISPOSE OF LAWFULLY.
- D8 REMOVE EXISTING VEGETATION/LANDSCAPING AS REQUIRED FOR INSTALLATION OF IMPROVEMENTS.
- D9 REMOVE CURB TO NEAREST JOINT.
- D10 CLEAR AND REMOVE EXISTING TREES AS NEEDED. SEE SPECIFICATIONS FOR TREE REMOVAL AND REPLACEMENT REQUIREMENTS.
- D11 EXISTING STORM STRUCTURE TO BE REMOVED & REPLACED AS PART OF CONSTRUCTION ACTIVITIES.
- D12 REMOVE AND REPLACE EXISTING STORM SEWER PIPE AND DISPOSE OF LAWFULLY.
- D13 EXISTING HOUSE SHALL BE DEMOLISHED BY CONTRACTOR PRIOR TO CONSTRUCTION OF LINE 'A'. SITE TO BE CLEARED OF ALL DEBRIS AND DISPOSED OF LAWFULLY BEFORE CONSTRUCTION OF LINE 'A'
- D14 CONTRACTOR TO REMOVE AND STORE EXISTING PARKING BLOCKS PRIOR TO CONSTRUCTION AS NEEDED.
- D15 EXISTING LIGHT POLE TO BE REMOVED AND REPLACED AS PART OF CONSTRUCTION ACTIVITIES AS NEEDED.
- D16 EXISTING CROSS WALK POST TO BE REMOVED AND REPLACED AS PART OF CONSTRUCTION ACTIVITIES AS NEEDED.
- D17 EXISTING GUARDRAIL TO BE REMOVED AND REPLACED AS PART OF CONSTRUCTION ACTIVITIES AS NEEDED.
- D18 EXISTING BENCH TO BE REMOVED AND REPLACED AS PART OF CONSTRUCTION ACTIVITIES AS NEEDED.
- D19 CONTRACTOR TO SUPPORT/REMOVE/RELOCATE EXISTING POWER POLES WITH GUIDANCE OF THE POWER COMPANY AS NEEDED.
- D20 EXISTING SIGN REMOVED AND REPLACED AS PART OF CONSTRUCTION ACTIVITIES AS NEEDED.
- D27 IF BRICK/RETAINING WALL IS DISTURBED, CONTRACTOR TO REPLACE AS NEEDED AND APPROVED BY ENGINEER AND OWNER.
- D22 EXISTING TELEPHONE/ FIBER BOXES TO BE RELOCATED WITH GUIDANCE FROM UTILITY'S COMPANY AS NEEDED.
- D23 REMOVE EXISTING ADA RAMPS AS NEEDED.
- D24 CONTRACTOR TO REMOVE AND RELOCATE CSO 022 SIGN TO NEW LOCATION.
- D25 CONTRACTOR TO REMOVE BUS STOP BENCH, STRUCTURE, CURB, SIDEWALK AND ADA RAMP AS NEEDED.
- D26 CONTRACTOR TO REMOVE AND REPLACE TRAFFIC SIGNAL ITEMS AS NEEDED FOR INTERCEPTOR INSTALLATION INCLUDING, BUT NOT LIMITED TO, TRAFFIC SIGNAL LOOPS, CONDUIT, DETECTOR HOUSINGS, AND WIRING NECESSARY TO RECONNECT THE VEHICLE LOOP DETECTION.



TYPICAL EXISTING CROSS WALK REFERENCE PICTURE

For Public Viewing Only-Not For Downloading

COMMONWEALTH ENGINEERS, INC.
A wealth of resources to master a common goal.
https://commonwealthengineers.com/

BRIAN KREED WILSON
REGISTERED
No. PE11900866
STATE OF INDIANA
PROFESSIONAL ENGINEER
Brian Wilson 8/15/2025
Signature Date

CITY OF KOKOMO, INDIANA
HOWARD COUNTY

NORTH SIDE INTERCEPTOR IMPROVEMENTS PROJECT

© 2025 BY COMMONWEALTH ENGINEERS, INC. ALL RIGHTS RESERVED. REPRODUCTION BY ANY METHOD IN WHOLE OR IN PART WITHOUT PERMISSION IS PROHIBITED

Know what's below. Call before you dig.
1-800-382-5544 (ITS THE LAW)
Know what's below. 811 before you dig.

No.	Submittal Revision	By	Date

Designed By:	Drawn By:	Checked By:
BW	BW/CH/EK	JH
Issue Date: 8/2025	Project No: S21082	Scale: AS SHOWN

DEMOLITION PLAN

Drawing No: D7
Sheet: 18 OF 137

File: Z:\SHARED\IN CLIENTS A-L\KOKOMO\S21082 NORTH SIDE INTERCEPTOR DESIGN\06 CAD\A CURRENT FILES\1 DRAWINGS\04 - S21082 - DEMO AND RESTORATION.DWG
Saved: 8/15/2025 2:28:18 PM Plotted: 8/18/2025 8:03:49 AM Current User: Brian Waterman LastSavedBy: bwaterman

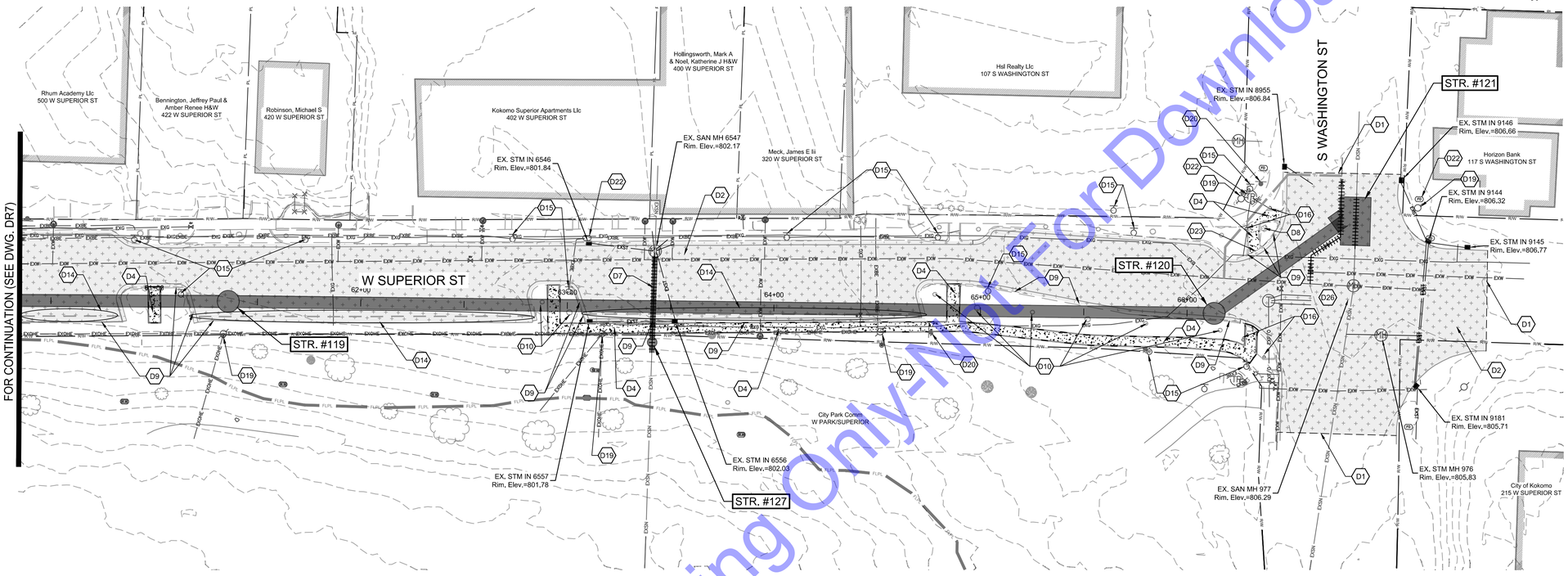

SCALE: 1"=30'

30' 0 30'

DEMOLITION PLAN

SCALE: 1"=30'-0"

DEMOLITION KEY NOTES

- D1 CUT EXISTING ASPHALT ALONG THIS LINE TO ACCOMMODATE INSTALLATION OF NEW PAVEMENT AGAINST EXISTING PAVEMENT.
- D2 REMOVE ASPHALT PAVEMENT/DRIVE/PARKING LOT/PATHWAY.
- D3 REMOVE CONCRETE PAVEMENT DRIVEWAY.
- D4 REMOVE CONCRETE WALK TO NEAREST JOINT.
- D5 CUT AND PLUG EXISTING SANITARY SEWER AT THIS LOCATION.
- D6 IF ABANDONING, CUT STRUCTURE 5' BELOW GROUND AND FILL WITH FLOWABLE FILL. IF REMOVING, DISPOSE OF LAWFULLY AND PLUG INCOMING PIPES (APPROXIMATE LOCATION SHOWN - VERIFY IN FIELD) - SEE SPECIFICATIONS.
- D7 REMOVE EXISTING SANITARY SEWER AND DISPOSE OF LAWFULLY.
- D8 REMOVE EXISTING VEGETATION/LANDSCAPING AS REQUIRED FOR INSTALLATION OF IMPROVEMENTS.
- D9 REMOVE CURB TO NEAREST JOINT.
- D10 CLEAR AND REMOVE EXISTING TREES AS NEEDED. SEE SPECIFICATIONS FOR TREE REMOVAL AND REPLACEMENT REQUIREMENTS.
- D11 EXISTING STORM STRUCTURE TO BE REMOVED & REPLACED AS PART OF CONSTRUCTION ACTIVITIES.
- D12 REMOVE AND REPLACE EXISTING STORM SEWER PIPE AND DISPOSE OF LAWFULLY.
- D13 EXISTING HOUSE SHALL BE DEMOLISHED BY CONTRACTOR PRIOR TO CONSTRUCTION OF LINE 'A'. SITE TO BE CLEARED OF ALL DEBRIS AND DISPOSED OF LAWFULLY BEFORE CONSTRUCTION OF LINE 'A'
- D14 CONTRACTOR TO REMOVE AND STORE EXISTING PARKING BLOCKS PRIOR TO CONSTRUCTION AS NEEDED.
- D15 EXISTING LIGHT POLE TO BE REMOVED AND REPLACED AS PART OF CONSTRUCTION ACTIVITIES AS NEEDED.
- D16 EXISTING CROSS WALK POST TO BE REMOVED AND REPLACED AS PART OF CONSTRUCTION ACTIVITIES AS NEEDED.
- D17 EXISTING GUARDRAIL TO BE REMOVED AND REPLACED AS PART OF CONSTRUCTION ACTIVITIES AS NEEDED.
- D18 EXISTING BENCH TO BE REMOVED AND REPLACED AS PART OF CONSTRUCTION ACTIVITIES AS NEEDED.
- D19 CONTRACTOR TO SUPPORT/REMOVE/RELOCATE EXISTING POWER POLES WITH GUIDANCE OF THE POWER COMPANY AS NEEDED.
- D20 EXISTING SIGN REMOVED AND REPLACED AS PART OF CONSTRUCTION ACTIVITIES AS NEEDED.
- D21 IF BRICK/RETAINING WALL IS DISTURBED, CONTRACTOR TO REPLACE AS NEEDED AND APPROVED BY ENGINEER AND OWNER.
- D22 EXISTING TELEPHONE/ FIBER BOXES TO BE RELOCATED WITH GUIDANCE FROM UTILITY'S COMPANY AS NEEDED.
- D23 REMOVE EXISTING ADA RAMPS AS NEEDED.
- D24 CONTRACTOR TO REMOVE AND RELOCATE CSO 022 SIGN TO NEW LOCATION.
- D25 CONTRACTOR TO REMOVE BUS STOP BENCH, STRUCTURE, CURB, SIDEWALK AND ADA RAMP AS NEEDED.
- D26 CONTRACTOR TO REMOVE AND REPLACE TRAFFIC SIGNAL ITEMS AS NEEDED FOR INTERCEPTOR INSTALLATION INCLUDING, BUT NOT LIMITED TO, TRAFFIC SIGNAL LOOPS, CONDUIT, DETECTOR HOUSINGS, AND WIRING NECESSARY TO RECONNECT THE VEHICLE LOOP DETECTION.



TYPICAL EXISTING
CROSS WALK
REFERENCE PICTURE

For Public Viewing Only-Not For Downloading

COMMONWEALTH ENGINEERS, INC.
A wealth of resources to master a common goal.
https://commonwealthengineers.com/

BRIAN KREED WILSON
REGISTERED
No. PE11900866
STATE OF
INDIANA
PROFESSIONAL ENGINEER
Brian Wilson
Signature
8/15/2025
Date

CITY OF KOKOMO, INDIANA
HOWARD COUNTY

NORTH SIDE INTERCEPTOR
IMPROVEMENTS PROJECT

© 2025 BY COMMONWEALTH ENGINEERS, INC. ALL RIGHTS RESERVED. REPRODUCTION BY ANY METHOD IN WHOLE OR IN PART WITHOUT PERMISSION IS PROHIBITED

Indiana 811
Know what's below. Call before you dig.
Know what's below. 811 before you dig.
1-800-382-5544
(ITS THE LAW)

No.	Submittal / Revision	By	Date

Designed By:	Drawn By:	Checked By:
BW	BW/CH/EK	JH
Issue Date:	Project No:	Scale:
8/2025	S21082	AS SHOWN

DEMOLITION PLAN

Drawing No:
D8
Sheet: 19 OF 137

File: Z:\SHARED\N CLIENTS A-L\KOKOMO\S21082 NORTH SIDE INTERCEPTOR DESIGN\06 CAD\A CURRENT FILES\1 DRAWINGS\04 - S21082 - DEMO AND RESTORATION.DWG
Saved: 8/15/2025 2:28:18 PM Plotted: 8/18/2025 8:05:26 AM Current User: Brian Waterman LastSavedBy: bwaterman

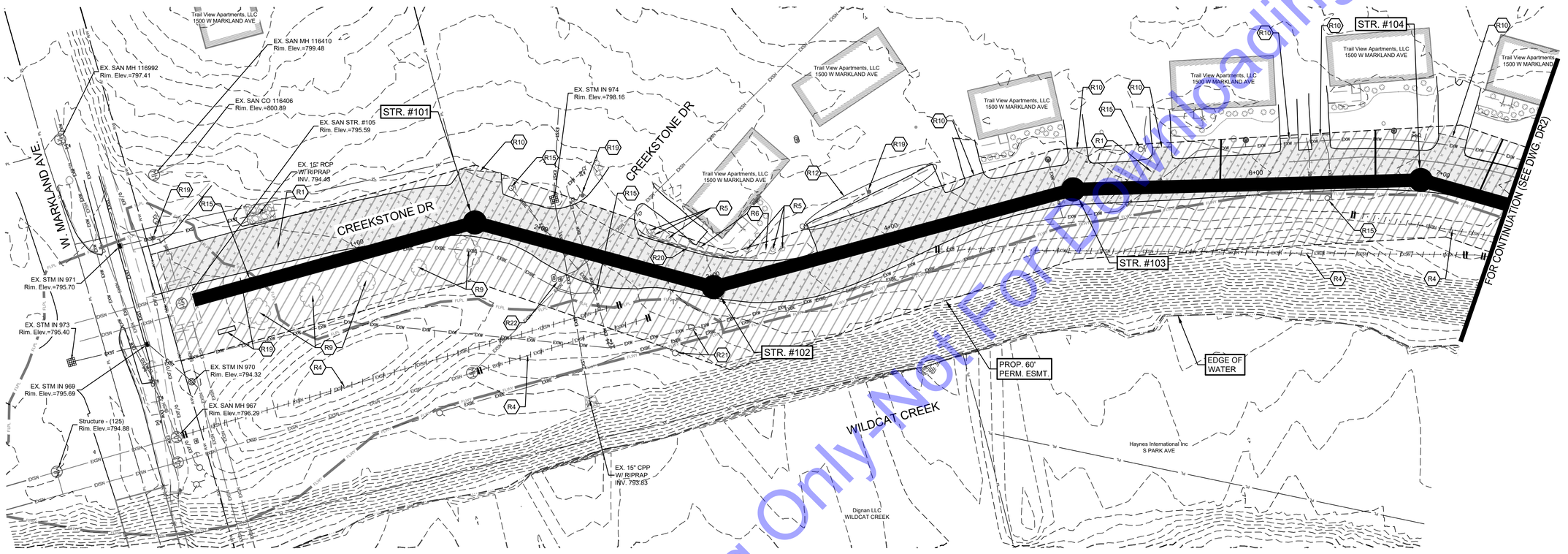

RESTORATION PLAN

SCALE: 1"=30'-0"

RESTORATION KEY NOTES

- R1 — RESURFACE ASPHALT STREET/DRIVE/PARKING LOT/ PATHWAY WITH 1-1/2" OF HMA SURFACE, TYPE B, 12.5 MM. PROVIDE STRIPING/MARKINGS TO MATCH EXISTING WHERE STRIPING/MARKINGS ARE CURRENTLY PROVIDED.
- R2 — REPLACE CONCRETE PAVEMENT DRIVEWAY.
- R3 — REPLACE CONCRETE WALK TO NEAREST JOINT.
- R4 — PLUG EXISTING SANITARY SEWER PIPE AND FILL WITH FLOWABLE FILL AND ABANDON IN PLACE.
- R5 — REPLACE EXISTING VEGETATION/LANDSCAPING TO EQUAL OR BETTER AS REQUIRED FOR INSTALLATION OF IMPROVEMENTS.
- R6 — CONTRACTOR SHALL PROVIDE FINAL GRADING AND SEEDING FOR ALL GRASSED AREAS DISTURBED DURING CONSTRUCTION TO EQUAL OR BETTER CONDITION AS APPROVED BY OWNER.
- R7 — REPLACE CURB TO NEAREST JOINT.
- R8 — CORE EXISTING STRUCTURE TO CONNECT NEW PIPE. SEE SS DRAWINGS, STRUCTURE INFORMATION, AND SPECIFICATION FOR PIPE SIZE, INVERT, AND CONNECTION REQUIREMENTS.
- R9 — REPLACE EXISTING TREES THAT HAVE BEEN REMOVED. SEE SPECIFICATIONS FOR TREE REMOVAL AND REPLACEMENT REQUIREMENTS.
- R10 — CONTRACTOR SHALL REPAIR EXISTING ASPHALT DRIVE TO ORIGINAL OR BETTER CONDITION IF DAMAGED DURING CONSTRUCTION.
- R11 — CONSTRUCT OR REPLACE ADA RAMPS AS NEEDED (SEE DWG. GR3).
- R12 — REPLACE EXISTING PARKING BLOCKS TO THEIR ORIGINAL POSITION AFTER CONSTRUCTION IS COMPLETE. ANY DAMAGED PARKING BLOCKS SHALL BE REPLACED AT THE CONTRACTOR'S EXPENSE.
- R13 — CONTRACTOR TO PROTECT/REPLACE RETAINING WALL AS NEEDED FOR NEW CURB/WALK TO BE INSTALLED.
- R14 — REPLACE EXISTING STORM STRUCTURE.
- R15 — CONTRACTOR TO REPLACE LIGHT POLE IN KIND AS NEEDED.
- R16 — CONTRACTOR TO REPLACE CROSS WALK POST IN KIND AS NEEDED.
- R17 — CONTRACTOR TO REPLACE GUARDRAIL IN KIND AS NEEDED.
- R18 — CONTRACTOR TO REPLACE BENCH IN KIND AS NEEDED.
- R19 — CONTRACTOR TO REPLACE SIGN IN KIND AS NEEDED.
- R20 — IF BRICK WALL IS DISTURBED, CONTRACTOR TO REPLACE AS NEEDED AND APPROVED BY ENGINEER AND OWNER.
- R21 — CONTRACTOR TO SUPPORT/REMOVE/RELOCATE EXISTING POWER POLES WITH GUIDANCE OF THE POWER COMPANY AS NEEDED.
- R22 — EXISTING TELEPHONE/ FIBER BOXES TO BE RELOCATED WITH GUIDANCE FROM UTILITY'S COMPANY AS NEEDED.
- R23 — CONTRACTOR TO REMOVE AND RELOCATE CSO 022 SIGN TO NEW LOCATION.
- R24 — CONTRACTOR TO REPLACE BUS STOP BENCH, STRUCTURE, CURB, SIDEWALK AND ADA RAMP AS NEEDED.
- R25 — CONTRACTOR TO REMOVE AND REPLACE TRAFFIC SIGNAL ITEMS AS NEEDED FOR INTERCEPTOR INSTALLATION INCLUDING, BUT NOT LIMITED TO, TRAFFIC SIGNAL LOOPS, CONDUIT, DETECTOR HOUSINGS, AND WIRING NECESSARY TO RECONNECT THE VEHICLE LOOP DETECTION.

For Public Viewing Only - Not For Downloading

COMMONWEALTH ENGINEERS, INC.
A wealth of resources to master a common goal.
https://commonwealthengineers.com/

BRIAN KRED WILSON
REGISTERED
No. PE11900866
STATE OF INDIANA
PROFESSIONAL ENGINEER

Brian Wilson
Signature

8/15/2025
Date

CITY OF KOKOMO, INDIANA
HOWARD COUNTY

NORTH SIDE INTERCEPTOR
IMPROVEMENTS PROJECTS

© 2025 BY COMMONWEALTH ENGINEERS, INC. ALL RIGHTS RESERVED. REPRODUCTION BY ANY METHOD IN WHOLE OR IN PART WITHOUT PERMISSION IS PROHIBITED

Indiana 811
Know what's below. Call before you dig.
Know what's below. 811 before you dig.
1-800-382-5544
(ITS THE LAW)

No.	Submittal / Revision	By	Date

Designed By:	Drawn By:	Checked By:
BW	BW/CH/EK	JH
Issue Date:	Project No:	Scale:
8/2025	S21082	AS SHOWN

RESTORATION PLAN

Drawing No:
R1
Sheet: 20 OF 137

File: Z:\SHARED\N CLIENTS A-L\KOKOMO\S21082 NORTH SIDE INTERCEPTOR DESIGN\06 CAD\A CURRENT FILES\ DRAWINGS\04 - S21082 - DEMO AND RESTORATION.DWG
Saved: 8/15/2025 2:28:18 PM Plotted: 8/18/2025 8:09:02 AM Current User: Brian Waterman LastSavedBy: bwaterman

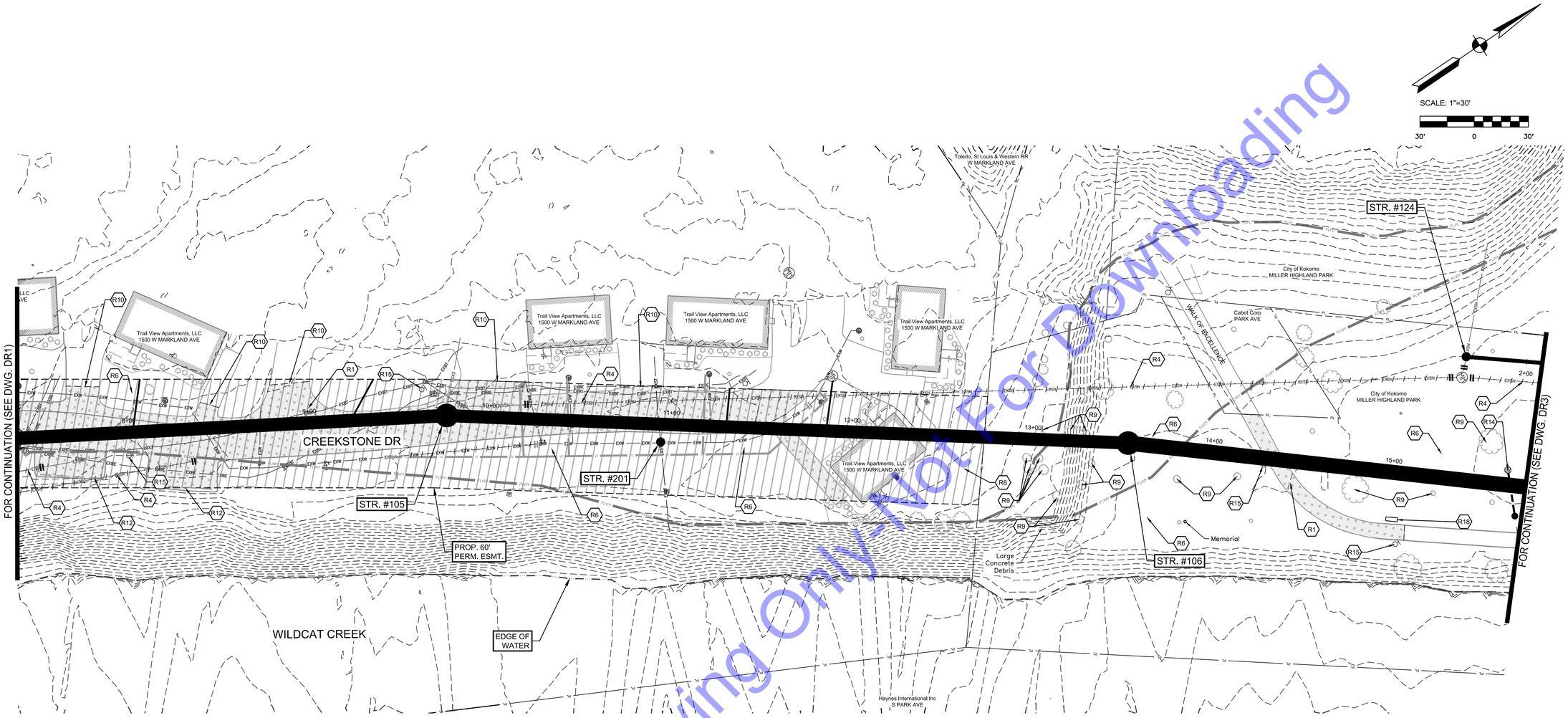

RESTORATION PLAN

SCALE: 1"=30'-0"

RESTORATION KEY NOTES

- R1 — RESURFACE ASPHALT STREET/DRIVE/PARKING LOT/ PATHWAY WITH 1-1/2" OF HMA SURFACE, TYPE B, 12.5 MM. PROVIDE STRIPING/MARKINGS TO MATCH EXISTING WHERE STRIPING/MARKINGS ARE CURRENTLY PROVIDED.
- R2 — REPLACE CONCRETE PAVEMENT DRIVEWAY.
- R3 — REPLACE CONCRETE WALK TO NEAREST JOINT.
- R4 — PLUG EXISTING SANITARY SEWER PIPE AND FILL WITH FLOWABLE FILL AND ABANDON IN PLACE.
- R5 — REPLACE EXISTING VEGETATION/LANDSCAPING TO EQUAL OR BETTER AS REQUIRED FOR INSTALLATION OF IMPROVEMENTS.
- R6 — CONTRACTOR SHALL PROVIDE FINAL GRADING AND SEEDING FOR ALL GRASSED AREAS DISTURBED DURING CONSTRUCTION TO EQUAL OR BETTER CONDITION AS APPROVED BY OWNER.
- R7 — REPLACE CURB TO NEAREST JOINT.
- R8 — CORE EXISTING STRUCTURE TO CONNECT NEW PIPE. SEE SS DRAWINGS, STRUCTURE INFORMATION, AND SPECIFICATION FOR PIPE SIZE, INVERT, AND CONNECTION REQUIREMENTS.
- R9 — REPLACE EXISTING TREES THAT HAVE BEEN REMOVED. SEE SPECIFICATIONS FOR TREE REMOVAL AND REPLACEMENT REQUIREMENTS.
- R10 — CONTRACTOR SHALL REPAIR EXISTING ASPHALT DRIVE TO ORIGINAL OR BETTER CONDITION IF DAMAGED DURING CONSTRUCTION.
- R11 — CONSTRUCT OR REPLACE ADA RAMPS AS NEEDED (SEE DWG. GR3).
- R12 — REPLACE EXISTING PARKING BLOCKS TO THEIR ORIGINAL POSITION AFTER CONSTRUCTION IS COMPLETE. ANY DAMAGED PARKING BLOCKS SHALL BE REPLACED AT THE CONTRACTOR'S EXPENSE.
- R13 — CONTRACTOR TO PROTECT/REPLACE RETAINING WALL AS NEEDED FOR NEW CURB/WALK TO BE INSTALLED.
- R14 — REPLACE EXISTING STORM STRUCTURE.
- R15 — CONTRACTOR TO REPLACE LIGHT POLE IN KIND AS NEEDED.
- R16 — CONTRACTOR TO REPLACE CROSS WALK POST IN KIND AS NEEDED.
- R17 — CONTRACTOR TO REPLACE GUARDRAIL IN KIND AS NEEDED.
- R18 — CONTRACTOR TO REPLACE BENCH IN KIND AS NEEDED.
- R19 — CONTRACTOR TO REPLACE SIGN IN KIND AS NEEDED.
- R20 — IF BRICK WALL IS DISTURBED, CONTRACTOR TO REPLACE AS NEEDED AND APPROVED BY ENGINEER AND OWNER.
- R21 — CONTRACTOR TO SUPPORT/REMOVE/RELOCATE EXISTING POWER POLES WITH GUIDANCE OF THE POWER COMPANY AS NEEDED.
- R22 — EXISTING TELEPHONE/ FIBER BOXES TO BE RELOCATED WITH GUIDANCE FROM UTILITY'S COMPANY AS NEEDED.
- R23 — CONTRACTOR TO REMOVE AND RELOCATE CSO 022 SIGN TO NEW LOCATION.
- R24 — CONTRACTOR TO REPLACE BUS STOP BENCH, STRUCTURE, CURB, SIDEWALK AND ADA RAMP AS NEEDED.
- R25 — CONTRACTOR TO REMOVE AND REPLACE TRAFFIC SIGNAL ITEMS AS NEEDED FOR INTERCEPTOR INSTALLATION INCLUDING, BUT NOT LIMITED TO, TRAFFIC SIGNAL LOOPS, CONDUIT, DETECTOR HOUSINGS, AND WIRING NECESSARY TO RECONNECT THE VEHICLE LOOP DETECTION.

For Public Viewing Only - Not For Downloading

COMMONWEALTH ENGINEERS, INC.
A wealth of resources to master a common goal.
https://commonwealthengineers.com/

BRIAN KREED WILSON
REGISTERED
No. PE11900866
STATE OF INDIANA
PROFESSIONAL ENGINEER

Brian Wilson
Signature

8/15/2025
Date

CITY OF KOKOMO, INDIANA
HOWARD COUNTY

NORTH SIDE INTERCEPTOR
IMPROVEMENTS PROJECT

© 2025 BY COMMONWEALTH ENGINEERS, INC. ALL RIGHTS RESERVED. REPRODUCTION BY ANY METHOD IN WHOLE OR IN PART WITHOUT PERMISSION IS PROHIBITED

Indiana 811
Know what's below. Call before you dig.
Know what's below. 811 before you dig.
1-800-382-5544
(ITS THE LAW)

No.	Submittal / Revision	By	Date

Designed By:	Drawn By:	Checked By:
BW	BW/CH/EK	JH
Issue Date:	Project No:	Scale:
8/2025	S21082	AS SHOWN

RESTORATION PLAN

Drawing No:
R2
Sheet: 21 OF 137

File: Z:\SHARED\IN CLIENTS A-L\KOKOMO\S21082 NORTH SIDE INTERCEPTOR DESIGN\06 CAD\A CURRENT FILES\1 DRAWINGS\04 - S21082 - DEMO AND RESTORATION.DWG
Saved: 8/18/2025 4:19:48 PM Plotted: 8/18/2025 4:23:45 PM Current User: Brian Waterman LastSavedBy: bwaterman

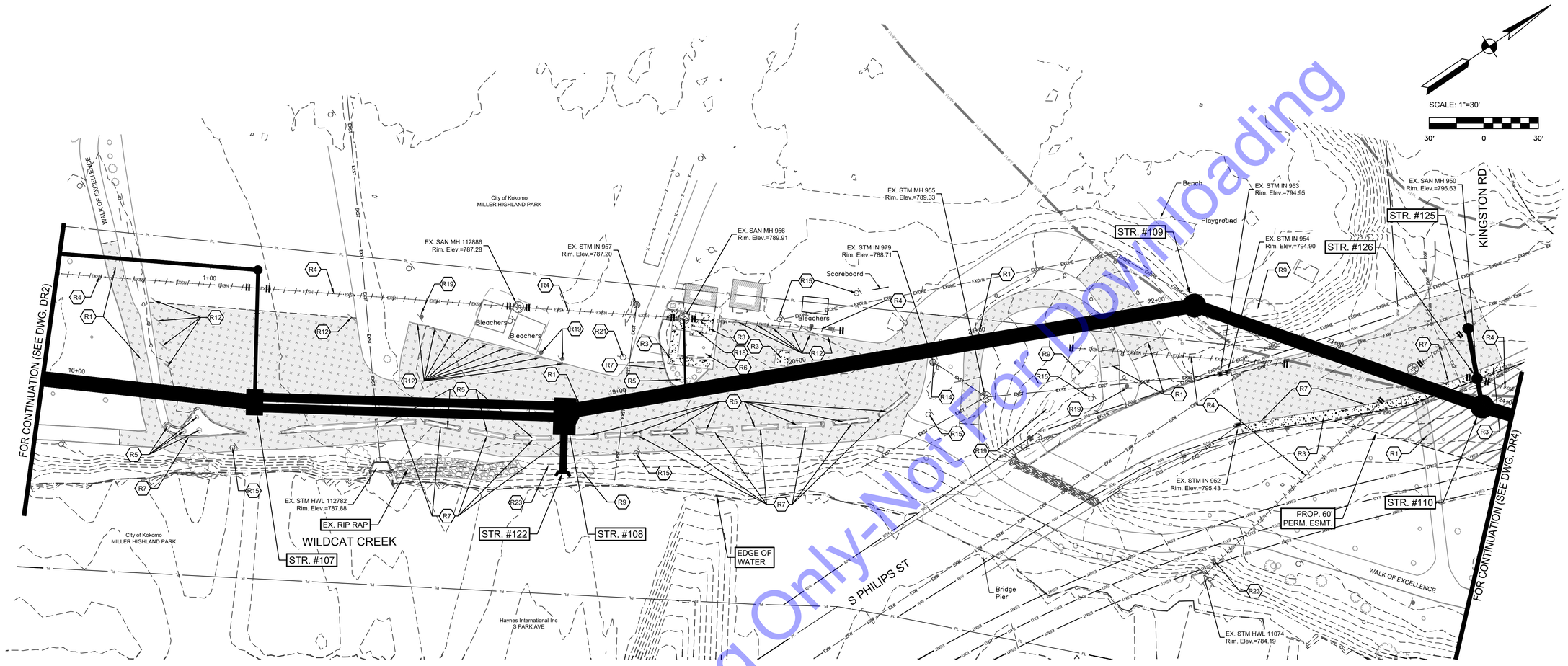

RESTORATION PLAN

SCALE: 1"=30'-0"

RESTORATION KEY NOTES

- R1 — RESURFACE ASPHALT STREET/DRIVE/PARKING LOT/ PATHWAY WITH 1-1/2" OF HMA SURFACE, TYPE B, 12.5 MM. PROVIDE STRIPING/MARKINGS TO MATCH EXISTING WHERE STRIPING/MARKINGS ARE CURRENTLY PROVIDED.
- R2 — REPLACE CONCRETE PAVEMENT DRIVEWAY.
- R3 — REPLACE CONCRETE WALK TO NEAREST JOINT.
- R4 — PLUG EXISTING SANITARY SEWER PIPE AND FILL WITH FLOWABLE FILL AND ABANDON IN PLACE.
- R5 — REPLACE EXISTING VEGETATION/LANDSCAPING TO EQUAL OR BETTER AS REQUIRED FOR INSTALLATION OF IMPROVEMENTS.
- R6 — CONTRACTOR SHALL PROVIDE FINAL GRADING AND SEEDING FOR ALL GRASSED AREAS DISTURBED DURING CONSTRUCTION TO EQUAL OR BETTER CONDITION AS APPROVED BY OWNER.
- R7 — REPLACE CURB TO NEAREST JOINT.
- R8 — CORE EXISTING STRUCTURE TO CONNECT NEW PIPE. SEE SS DRAWINGS, STRUCTURE INFORMATION, AND SPECIFICATION FOR PIPE SIZE, INVERT, AND CONNECTION REQUIREMENTS.
- R9 — REPLACE EXISTING TREES THAT HAVE BEEN REMOVED. SEE SPECIFICATIONS FOR TREE REMOVAL AND REPLACEMENT REQUIREMENTS.
- R10 — CONTRACTOR SHALL REPAIR EXISTING ASPHALT DRIVE TO ORIGINAL OR BETTER CONDITION IF DAMAGED DURING CONSTRUCTION.
- R11 — CONSTRUCT OR REPLACE ADA RAMPS AS NEEDED (SEE DWG. GR3).
- R12 — REPLACE EXISTING PARKING BLOCKS TO THEIR ORIGINAL POSITION AFTER CONSTRUCTION IS COMPLETE. ANY DAMAGED PARKING BLOCKS SHALL BE REPLACED AT THE CONTRACTOR'S EXPENSE.
- R13 — CONTRACTOR TO PROTECT/REPLACE RETAINING WALL AS NEEDED FOR NEW CURB/WALK TO BE INSTALLED.
- R14 — REPLACE EXISTING STORM STRUCTURE.
- R15 — CONTRACTOR TO REPLACE LIGHT POLE IN KIND AS NEEDED.
- R16 — CONTRACTOR TO REPLACE CROSS WALK POST IN KIND AS NEEDED.
- R17 — CONTRACTOR TO REPLACE GUARDRAIL IN KIND AS NEEDED.
- R18 — CONTRACTOR TO REPLACE BENCH IN KIND AS NEEDED.
- R19 — CONTRACTOR TO REPLACE SIGN IN KIND AS NEEDED.
- R20 — IF BRICK WALL IS DISTURBED, CONTRACTOR TO REPLACE AS NEEDED AND APPROVED BY ENGINEER AND OWNER.
- R21 — CONTRACTOR TO SUPPORT/REMOVE/RELOCATE EXISTING POWER POLES WITH GUIDANCE OF THE POWER COMPANY AS NEEDED.
- R22 — EXISTING TELEPHONE/ FIBER BOXES TO BE RELOCATED WITH GUIDANCE FROM UTILITY'S COMPANY AS NEEDED.
- R23 — CONTRACTOR TO REMOVE AND RELOCATE CSO 022 SIGN TO NEW LOCATION.
- R24 — CONTRACTOR TO REPLACE BUS STOP BENCH, STRUCTURE, CURB, SIDEWALK AND ADA RAMP AS NEEDED.
- R25 — CONTRACTOR TO REMOVE AND REPLACE TRAFFIC SIGNAL ITEMS AS NEEDED FOR INTERCEPTOR INSTALLATION INCLUDING, BUT NOT LIMITED TO, TRAFFIC SIGNAL LOOPS, CONDUIT, DETECTOR HOUSINGS, AND WIRING NECESSARY TO RECONNECT THE VEHICLE LOOP DETECTION.

For Public Viewing Only-Not For Downloading

COMMONWEALTH ENGINEERS, INC.
A wealth of resources to master a concrete job.
https://commonwealthengineers.com/

BRIAN KREED WILSON
REGISTERED
No. PE11900866
STATE OF INDIANA
PROFESSIONAL ENGINEER
Brian Wilson 8/15/2025
Signature Date

CITY OF KOKOMO, INDIANA
HOWARD COUNTY

NORTH SIDE INTERCEPTOR
IMPROVEMENTS PROJECT

© 2025 BY COMMONWEALTH ENGINEERS, INC. ALL RIGHTS RESERVED. REPRODUCTION BY ANY METHOD IN WHOLE OR IN PART WITHOUT PERMISSION IS PROHIBITED

Indiana 811 Know what's below. Call before you dig.
Know what's below. 811 before you dig. 1-800-382-5544 (ITS THE LAW)

No.	Submittal / Revision	By	Date

Designed By:	Drawn By:	Checked By:
BW	BW/CH/EK	JH
Issue Date:	Project No:	Scale:
8/2025	S21082	AS SHOWN

RESTORATION PLAN

Drawing No: R3

Sheet: 22 OF 137

File: Z:\SHARED\IN CLIENTS A-L\KOKOMO\S21082 NORTH SIDE INTERCEPTOR DESIGN\06 CAD\A CURRENT FILES\1 DRAWINGS\04 - S21082 - DEMO AND RESTORATION.DWG
Saved: 8/15/2025 2:28:18 PM Plotted: 8/18/2025 8:12:54 AM Current User: Brian Waterman LastSavedBy: bwaterman

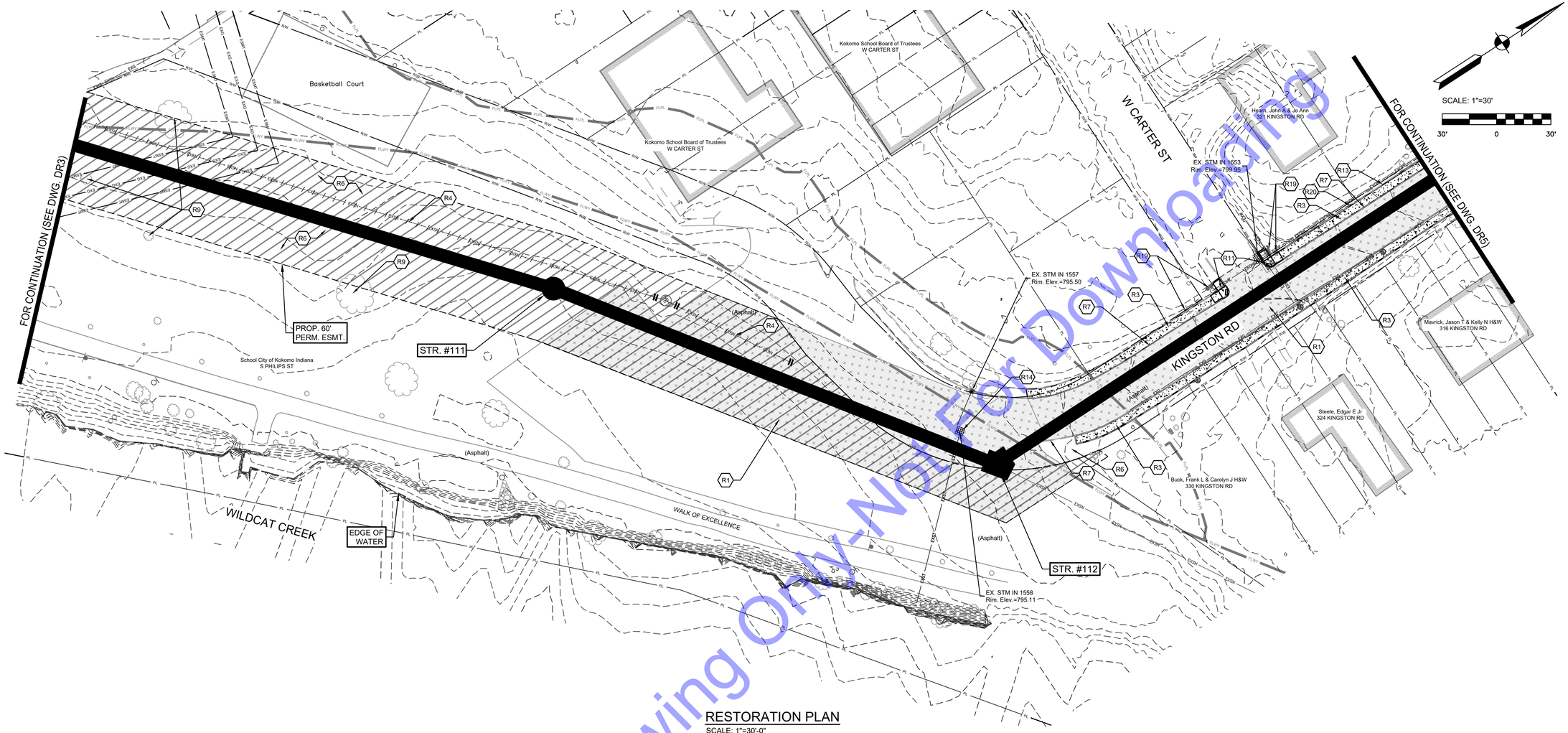

RESTORATION PLAN

SCALE: 1"=30'-0"

RESTORATION KEY NOTES

- R1 — RESURFACE ASPHALT STREET/DRIVE/PARKING LOT/ PATHWAY WITH 1-1/2" OF HMA SURFACE, TYPE B, 12.5 MM. PROVIDE STRIPING/MARKINGS TO MATCH EXISTING WHERE STRIPING/MARKINGS ARE CURRENTLY PROVIDED.
- R2 — REPLACE CONCRETE PAVEMENT DRIVEWAY.
- R3 — REPLACE CONCRETE WALK TO NEAREST JOINT.
- R4 — PLUG EXISTING SANITARY SEWER PIPE AND FILL WITH FLOWABLE FILL AND ABANDON IN PLACE.
- R5 — REPLACE EXISTING VEGETATION/LANDSCAPING TO EQUAL OR BETTER AS REQUIRED FOR INSTALLATION OF IMPROVEMENTS.
- R6 — CONTRACTOR SHALL PROVIDE FINAL GRADING AND SEEDING FOR ALL GRASSED AREAS DISTURBED DURING CONSTRUCTION TO EQUAL OR BETTER CONDITION AS APPROVED BY OWNER.
- R7 — REPLACE CURB TO NEAREST JOINT.
- R8 — CORE EXISTING STRUCTURE TO CONNECT NEW PIPE. SEE SS DRAWINGS, STRUCTURE INFORMATION, AND SPECIFICATION FOR PIPE SIZE, INVERT, AND CONNECTION REQUIREMENTS.
- R9 — REPLACE EXISTING TREES THAT HAVE BEEN REMOVED. SEE SPECIFICATIONS FOR TREE REMOVAL AND REPLACEMENT REQUIREMENTS.
- R10 — CONTRACTOR SHALL REPAIR EXISTING ASPHALT DRIVE TO ORIGINAL OR BETTER CONDITION IF DAMAGED DURING CONSTRUCTION.
- R11 — CONSTRUCT OR REPLACE ADA RAMPS AS NEEDED (SEE DWG. GR3).
- R12 — REPLACE EXISTING PARKING BLOCKS TO THEIR ORIGINAL POSITION AFTER CONSTRUCTION IS COMPLETE. ANY DAMAGED PARKING BLOCKS SHALL BE REPLACED AT THE CONTRACTOR'S EXPENSE.
- R13 — CONTRACTOR TO PROTECT/REPLACE RETAINING WALL AS NEEDED FOR NEW CURB/WALK TO BE INSTALLED.
- R14 — REPLACE EXISTING STORM STRUCTURE.
- R15 — CONTRACTOR TO REPLACE LIGHT POLE IN KIND AS NEEDED.
- R16 — CONTRACTOR TO REPLACE CROSS WALK POST IN KIND AS NEEDED.
- R17 — CONTRACTOR TO REPLACE GUARDRAIL IN KIND AS NEEDED.
- R18 — CONTRACTOR TO REPLACE BENCH IN KIND AS NEEDED.
- R19 — CONTRACTOR TO REPLACE SIGN IN KIND AS NEEDED.
- R20 — IF BRICK WALL IS DISTURBED, CONTRACTOR TO REPLACE AS NEEDED AND APPROVED BY ENGINEER AND OWNER.
- R21 — CONTRACTOR TO SUPPORT/REMOVE/RELOCATE EXISTING POWER POLES WITH GUIDANCE OF THE POWER COMPANY AS NEEDED.
- R22 — EXISTING TELEPHONE/ FIBER BOXES TO BE RELOCATED WITH GUIDANCE FROM UTILITY'S COMPANY AS NEEDED.
- R23 — CONTRACTOR TO REMOVE AND RELOCATE CSO 022 SIGN TO NEW LOCATION.
- R24 — CONTRACTOR TO REPLACE BUS STOP BENCH, STRUCTURE, CURB, SIDEWALK AND ADA RAMP AS NEEDED.
- R25 — CONTRACTOR TO REMOVE AND REPLACE TRAFFIC SIGNAL ITEMS AS NEEDED FOR INTERCEPTOR INSTALLATION INCLUDING, BUT NOT LIMITED TO, TRAFFIC SIGNAL LOOPS, CONDUIT, DETECTOR HOUSINGS, AND WIRING NECESSARY TO RECONNECT THE VEHICLE LOOP DETECTION.



FLAGSTONE RETAINING WALL LOCATED AT 321 KINGSTON RD

For Public Viewing Only-Not For Downloading

COMMONWEALTH ENGINEERS, INC.
A wealth of resources to master a common goal.
https://commonwealthengineers.com/

BRIAN KREED WILSON
REGISTERED
No. PE11900866
STATE OF INDIANA
PROFESSIONAL ENGINEER
Brian Wilson 8/15/2025
Signature Date

CITY OF KOKOMO, INDIANA
HOWARD COUNTY

NORTH SIDE INTERCEPTOR
IMPROVEMENTS PROJECT

© 2025 BY COMMONWEALTH ENGINEERS, INC. ALL RIGHTS RESERVED. REPRODUCTION BY ANY METHOD IN WHOLE OR IN PART WITHOUT PERMISSION IS PROHIBITED

Indiana 811 Know what's below. Call before you dig.
Know what's below. 811 before you dig.
1-800-382-5544 (ITS THE LAW)

No.	Submittal / Revision	By	Date

Designed By:	Drawn By:	Checked By:
BW	BW/CH/EK	JH
Issue Date:	Project No:	Scale:
8/2025	S21082	AS SHOWN

RESTORATION PLAN

Drawing No:
R4
Sheet: 23 OF 137

File: Z:\SHARED\IN CLIENTS A-L\KOKOMO\S21082 NORTH SIDE INTERCEPTOR DESIGN\06 CAD\A CURRENT FILES\1 DRAWINGS\04 - S21082 - DEMO AND RESTORATION.DWG
Saved: 8/15/2025 2:28:18 PM Plotted: 8/18/2025 8:14:31 AM Current User: Brian Waterman LastSavedBy: bwaterman

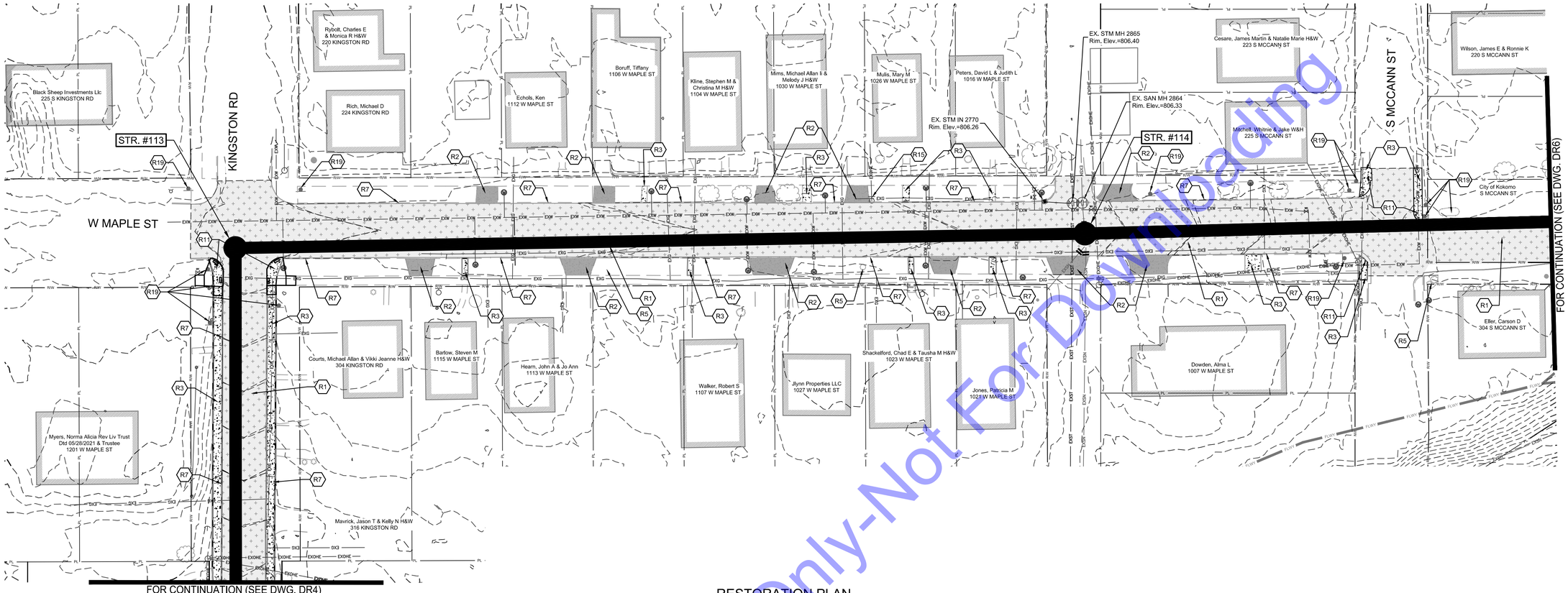

RESTORATION PLAN

SCALE: 1"=30'-0"

RESTORATION KEY NOTES

- R1 — RESURFACE ASPHALT STREET/DRIVE/PARKING LOT/ PATHWAY WITH 1-1/2" OF HMA SURFACE, TYPE B, 12.5 MM. PROVIDE STRIPING/MARKINGS TO MATCH EXISTING WHERE STRIPING/MARKINGS ARE CURRENTLY PROVIDED.
- R2 — REPLACE CONCRETE PAVEMENT DRIVEWAY.
- R3 — REPLACE CONCRETE WALK TO NEAREST JOINT.
- R4 — PLUG EXISTING SANITARY SEWER PIPE AND FILL WITH FLOWABLE FILL AND ABANDON IN PLACE.
- R5 — REPLACE EXISTING VEGETATION/LANDSCAPING TO EQUAL OR BETTER AS REQUIRED FOR INSTALLATION OF IMPROVEMENTS.
- R6 — CONTRACTOR SHALL PROVIDE FINAL GRADING AND SEEDING FOR ALL GRASSED AREAS DISTURBED DURING CONSTRUCTION TO EQUAL OR BETTER CONDITION AS APPROVED BY OWNER.
- R7 — REPLACE CURB TO NEAREST JOINT.
- R8 — CORE EXISTING STRUCTURE TO CONNECT NEW PIPE. SEE SS DRAWINGS, STRUCTURE INFORMATION, AND SPECIFICATION FOR PIPE SIZE, INVERT, AND CONNECTION REQUIREMENTS.
- R9 — REPLACE EXISTING TREES THAT HAVE BEEN REMOVED. SEE SPECIFICATIONS FOR TREE REMOVAL AND REPLACEMENT REQUIREMENTS.
- R10 — CONTRACTOR SHALL REPAIR EXISTING ASPHALT DRIVE TO ORIGINAL OR BETTER CONDITION IF DAMAGED DURING CONSTRUCTION.
- R11 — CONSTRUCT OR REPLACE ADA RAMPS AS NEEDED (SEE DWG. GR3).
- R12 — REPLACE EXISTING PARKING BLOCKS TO THEIR ORIGINAL POSITION AFTER CONSTRUCTION IS COMPLETE. ANY DAMAGED PARKING BLOCKS SHALL BE REPLACED AT THE CONTRACTOR'S EXPENSE.
- R13 — CONTRACTOR TO PROTECT/REPLACE RETAINING WALL AS NEEDED FOR NEW CURB/WALK TO BE INSTALLED.
- R14 — REPLACE EXISTING STORM STRUCTURE.
- R15 — CONTRACTOR TO REPLACE LIGHT POLE IN KIND AS NEEDED.
- R16 — CONTRACTOR TO REPLACE CROSS WALK POST IN KIND AS NEEDED.
- R17 — CONTRACTOR TO REPLACE GUARDRAIL IN KIND AS NEEDED.
- R18 — CONTRACTOR TO REPLACE BENCH IN KIND AS NEEDED.
- R19 — CONTRACTOR TO REPLACE SIGN IN KIND AS NEEDED.
- R20 — IF BRICK WALL IS DISTURBED, CONTRACTOR TO REPLACE AS NEEDED AND APPROVED BY ENGINEER AND OWNER.
- R21 — CONTRACTOR TO SUPPORT/REMOVE/RELOCATE EXISTING POWER POLES WITH GUIDANCE OF THE POWER COMPANY AS NEEDED.
- R22 — EXISTING TELEPHONE/ FIBER BOXES TO BE RELOCATED WITH GUIDANCE FROM UTILITY'S COMPANY AS NEEDED.
- R23 — CONTRACTOR TO REMOVE AND RELOCATE CSO 022 SIGN TO NEW LOCATION.
- R24 — CONTRACTOR TO REPLACE BUS STOP BENCH, STRUCTURE, CURB, SIDEWALK AND ADA RAMP AS NEEDED.
- R25 — CONTRACTOR TO REMOVE AND REPLACE TRAFFIC SIGNAL ITEMS AS NEEDED FOR INTERCEPTOR INSTALLATION INCLUDING, BUT NOT LIMITED TO, TRAFFIC SIGNAL LOOPS, CONDUIT, DETECTOR HOUSINGS, AND WIRING NECESSARY TO RECONNECT THE VEHICLE LOOP DETECTION.

SCALE: 1"=30'

30' 0 30'

For Public Viewing Only-Not For Downloading

COMMONWEALTH ENGINEERS, INC.
A wealth of resources to master a common goal.
https://commonwealthengineers.com/

BRIAN KREED WILSON
REGISTERED
No. PE11900866
STATE OF INDIANA
PROFESSIONAL ENGINEER
Brian Wilson 8/15/2025
Signature Date

CITY OF KOKOMO, INDIANA
HOWARD COUNTY

NORTH SIDE INTERCEPTOR
IMPROVEMENTS PROJECT

© 2025 BY COMMONWEALTH ENGINEERS, INC. ALL RIGHTS RESERVED. REPRODUCTION BY ANY METHOD IN WHOLE OR IN PART WITHOUT PERMISSION IS PROHIBITED

Know what's below. Call before you dig. 811
1-800-382-5544 (ITS THE LAW)

No.	Submittal / Revision	By	Date

Designed By:	Drawn By:	Checked By:
BW	BW/CH/EK	JH
Issue Date: 8/2025	Project No: S21082	Scale: AS SHOWN

RESTORATION PLAN

Drawing No: R5

Sheet: 24 OF 137

File: Z:\SHARED\IN CLIENTS A-L\KOKOMO\S21082 NORTH SIDE INTERCEPTOR DESIGN\06 CAD\A CURRENT FILES\1 DRAWINGS\04 - S21082 - DEMO AND RESTORATION.DWG
Saved: 8/18/2025 4:19:48 PM Plotted: 8/18/2025 4:25:25 PM Current User: Brian Waterman LastSavedBy: bwaterman

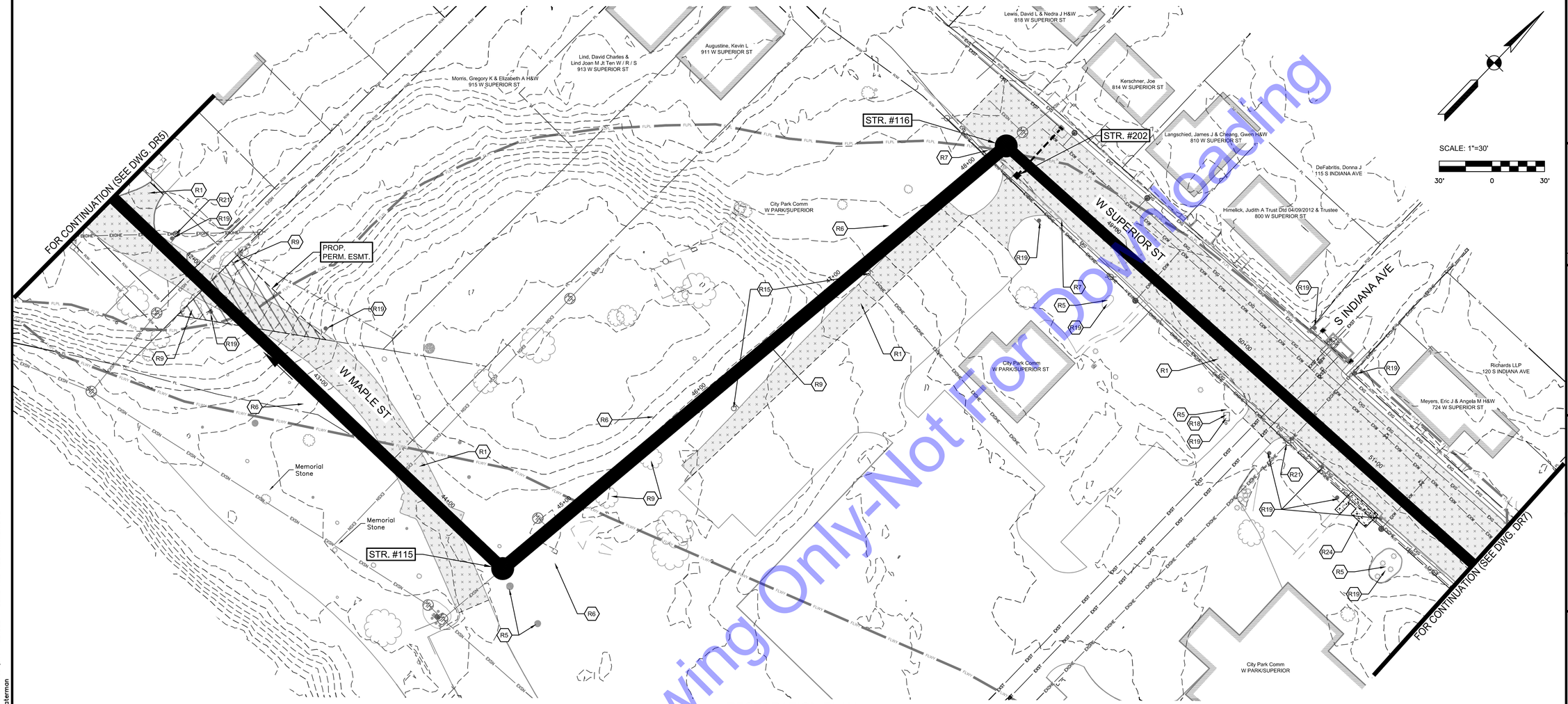

RESTORATION PLAN

SCALE: 1"=30'-0"

RESTORATION KEY NOTES

- R1 — RESURFACE ASPHALT STREET/DRIVE/PARKING LOT/ PATHWAY WITH 1-1/2" OF HMA SURFACE, TYPE B, 12.5 MM. PROVIDE STRIPING/MARKINGS TO MATCH EXISTING WHERE STRIPING/MARKINGS ARE CURRENTLY PROVIDED.
- R2 — REPLACE CONCRETE PAVEMENT DRIVEWAY.
- R3 — REPLACE CONCRETE WALK TO NEAREST JOINT.
- R4 — PLUG EXISTING SANITARY SEWER PIPE AND FILL WITH FLOWABLE FILL AND ABANDON IN PLACE.
- R5 — REPLACE EXISTING VEGETATION/LANDSCAPING TO EQUAL OR BETTER AS REQUIRED FOR INSTALLATION OF IMPROVEMENTS.
- R6 — CONTRACTOR SHALL PROVIDE FINAL GRADING AND SEEDING FOR ALL GRASSED AREAS DISTURBED DURING CONSTRUCTION TO EQUAL OR BETTER CONDITION AS APPROVED BY OWNER.
- R7 — REPLACE CURB TO NEAREST JOINT.
- R8 — CORE EXISTING STRUCTURE TO CONNECT NEW PIPE. SEE SS DRAWINGS, STRUCTURE INFORMATION, AND SPECIFICATION FOR PIPE SIZE, INVERT, AND CONNECTION REQUIREMENTS.
- R9 — REPLACE EXISTING TREES THAT HAVE BEEN REMOVED. SEE SPECIFICATIONS FOR TREE REMOVAL AND REPLACEMENT REQUIREMENTS.
- R10 — CONTRACTOR SHALL REPAIR EXISTING ASPHALT DRIVE TO ORIGINAL OR BETTER CONDITION IF DAMAGED DURING CONSTRUCTION.
- R11 — CONSTRUCT OR REPLACE ADA RAMPS AS NEEDED (SEE DWG. GR3).
- R12 — REPLACE EXISTING PARKING BLOCKS TO THEIR ORIGINAL POSITION AFTER CONSTRUCTION IS COMPLETE. ANY DAMAGED PARKING BLOCKS SHALL BE REPLACED AT THE CONTRACTOR'S EXPENSE.
- R13 — CONTRACTOR TO PROTECT/REPLACE RETAINING WALL AS NEEDED FOR NEW CURB/WALK TO BE INSTALLED.
- R14 — REPLACE EXISTING STORM STRUCTURE.
- R15 — CONTRACTOR TO REPLACE LIGHT POLE IN KIND AS NEEDED.
- R16 — CONTRACTOR TO REPLACE CROSS WALK POST IN KIND AS NEEDED.
- R17 — CONTRACTOR TO REPLACE GUARDRAIL IN KIND AS NEEDED.
- R18 — CONTRACTOR TO REPLACE BENCH IN KIND AS NEEDED.
- R19 — CONTRACTOR TO REPLACE SIGN IN KIND AS NEEDED.
- R20 — IF BRICK WALL IS DISTURBED, CONTRACTOR TO REPLACE AS NEEDED AND APPROVED BY ENGINEER AND OWNER.
- R21 — CONTRACTOR TO SUPPORT/REMOVE/RELOCATE EXISTING POWER POLES WITH GUIDANCE OF THE POWER COMPANY AS NEEDED.
- R22 — EXISTING TELEPHONE/ FIBER BOXES TO BE RELOCATED WITH GUIDANCE FROM UTILITY'S COMPANY AS NEEDED.
- R23 — CONTRACTOR TO REMOVE AND RELOCATE CSO 022 SIGN TO NEW LOCATION.
- R24 — CONTRACTOR TO REPLACE BUS STOP BENCH, STRUCTURE, CURB, SIDEWALK AND ADA RAMP AS NEEDED.
- R25 — CONTRACTOR TO REMOVE AND REPLACE TRAFFIC SIGNAL ITEMS AS NEEDED FOR INTERCEPTOR INSTALLATION INCLUDING, BUT NOT LIMITED TO, TRAFFIC SIGNAL LOOPS, CONDUIT, DETECTOR HOUSINGS, AND WIRING NECESSARY TO RECONNECT THE VEHICLE LOOP DETECTION.



TYPICAL EXISTING BUS STOP REFERENCE PICTURE

Only-Not For Public Viewing Or Downloading

COMMONWEALTH ENGINEERS, INC.
A wealth of resources to master a common goal.
https://commonwealthengineers.com/

BRIAN KREED WILSON
REGISTERED
No. PE11900866
STATE OF INDIANA
PROFESSIONAL ENGINEER

Brian Wilson 8/15/2025
Signature Date

CITY OF KOKOMO, INDIANA
HOWARD COUNTY

NORTH SIDE INTERCEPTOR IMPROVEMENTS PROJECT

© 2025 BY COMMONWEALTH ENGINEERS, INC. ALL RIGHTS RESERVED. REPRODUCTION BY ANY METHOD IN WHOLE OR IN PART WITHOUT PERMISSION IS PROHIBITED

Indiana 811 Know what's below. Call before you dig.
Know what's below. 811 before you dig.
1-800-382-5544 (ITS THE LAW)

No.	Submittal / Revision	By	Date

Designed By:	Drawn By:	Checked By:
BW	BW/CH/EK	JH
Issue Date: 8/2025	Project No: S21082	Scale: AS SHOWN

RESTORATION PLAN

Drawing No: R6

Sheet: 25 OF 137

File: Z:\SHARED\IN CLIENTS A-L\KOKOMO\S21082 NORTH SIDE INTERCEPTOR DESIGN\06 CAD\A CURRENT FILES\1 DRAWINGS\04 - S21082 - DEMO AND RESTORATION.DWG
Saved: 8/18/2025 4:19:48 PM Plotted: 8/18/2025 4:32:55 PM Current User: Brian Waterman LastSavedBy: bwaterman

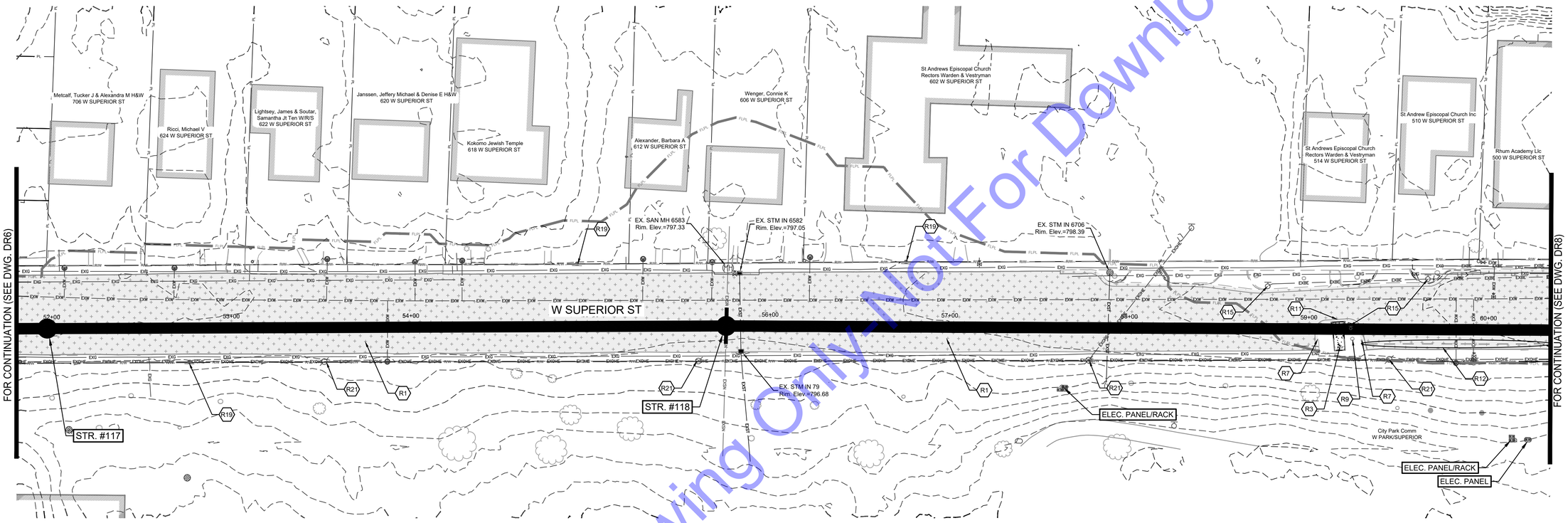

SCALE: 1"=30'

30' 0 30'

RESTORATION PLAN

SCALE: 1"=30'-0"

RESTORATION KEY NOTES

- R1 RESURFACE ASPHALT STREET/DRIVE/PARKING LOT/ PATHWAY WITH 1-1/2" OF HMA SURFACE, TYPE B, 12.5 MM. PROVIDE STRIPING/MARKINGS TO MATCH EXISTING WHERE STRIPING/MARKINGS ARE CURRENTLY PROVIDED.
- R2 REPLACE CONCRETE PAVEMENT DRIVEWAY.
- R3 REPLACE CONCRETE WALK TO NEAREST JOINT.
- R4 PLUG EXISTING SANITARY SEWER PIPE AND FILL WITH FLOWABLE FILL AND ABANDON IN PLACE.
- R5 REPLACE EXISTING VEGETATION/LANDSCAPING TO EQUAL OR BETTER AS REQUIRED FOR INSTALLATION OF IMPROVEMENTS.
- R6 CONTRACTOR SHALL PROVIDE FINAL GRADING AND SEEDING FOR ALL GRASSED AREAS DISTURBED DURING CONSTRUCTION TO EQUAL OR BETTER CONDITION AS APPROVED BY OWNER.
- R7 REPLACE CURB TO NEAREST JOINT.
- R8 CORE EXISTING STRUCTURE TO CONNECT NEW PIPE. SEE SS DRAWINGS, STRUCTURE INFORMATION, AND SPECIFICATION FOR PIPE SIZE, INVERT, AND CONNECTION REQUIREMENTS.
- R9 REPLACE EXISTING TREES THAT HAVE BEEN REMOVED. SEE SPECIFICATIONS FOR TREE REMOVAL AND REPLACEMENT REQUIREMENTS.
- R10 CONTRACTOR SHALL REPAIR EXISTING ASPHALT DRIVE TO ORIGINAL OR BETTER CONDITION IF DAMAGED DURING CONSTRUCTION.
- R11 CONSTRUCT OR REPLACE ADA RAMPS AS NEEDED (SEE DWG. GR3).
- R12 REPLACE EXISTING PARKING BLOCKS TO THEIR ORIGINAL POSITION AFTER CONSTRUCTION IS COMPLETE. ANY DAMAGED PARKING BLOCKS SHALL BE REPLACED AT THE CONTRACTOR'S EXPENSE.
- R13 CONTRACTOR TO PROTECT/REPLACE RETAINING WALL AS NEEDED FOR NEW CURB/WALK TO BE INSTALLED.
- R14 REPLACE EXISTING STORM STRUCTURE.
- R15 CONTRACTOR TO REPLACE LIGHT POLE IN KIND AS NEEDED.
- R16 CONTRACTOR TO REPLACE CROSS WALK POST IN KIND AS NEEDED.
- R17 CONTRACTOR TO REPLACE GUARDRAIL IN KIND AS NEEDED.
- R18 CONTRACTOR TO REPLACE BENCH IN KIND AS NEEDED.
- R19 CONTRACTOR TO REPLACE SIGN IN KIND AS NEEDED.
- R20 IF BRICK WALL IS DISTURBED, CONTRACTOR TO REPLACE AS NEEDED AND APPROVED BY ENGINEER AND OWNER.
- R21 CONTRACTOR TO SUPPORT/REMOVE/RELOCATE EXISTING POWER POLES WITH GUIDANCE OF THE POWER COMPANY AS NEEDED.
- R22 EXISTING TELEPHONE/ FIBER BOXES TO BE RELOCATED WITH GUIDANCE FROM UTILITY'S COMPANY AS NEEDED.
- R23 CONTRACTOR TO REMOVE AND RELOCATE CSO 022 SIGN TO NEW LOCATION.
- R24 CONTRACTOR TO REPLACE BUS STOP BENCH, STRUCTURE, CURB, SIDEWALK AND ADA RAMP AS NEEDED.
- R25 CONTRACTOR TO REMOVE AND REPLACE TRAFFIC SIGNAL ITEMS AS NEEDED FOR INTERCEPTOR INSTALLATION INCLUDING, BUT NOT LIMITED TO, TRAFFIC SIGNAL LOOPS, CONDUIT, DETECTOR HOUSINGS, AND WIRING NECESSARY TO RECONNECT THE VEHICLE LOOP DETECTION.

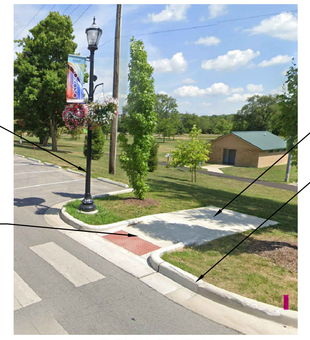

TYPICAL EXISTING CROSS WALK REFERENCE PICTURE

For Public Viewing Only - Not For Downloading

COMMONWEALTH ENGINEERS, INC.
A wealth of resources to master a common goal.
https://commonwealthengineers.com/

BRIAN KREED WILSON
REGISTERED
No. PE11900866
STATE OF INDIANA
PROFESSIONAL ENGINEER

Brian Wilson 8/15/2025
Signature Date

CITY OF KOKOMO, INDIANA
HOWARD COUNTY

NORTH SIDE INTERCEPTOR IMPROVEMENTS PROJECT

© 2025 BY COMMONWEALTH ENGINEERS, INC. ALL RIGHTS RESERVED. REPRODUCTION BY ANY METHOD IN WHOLE OR IN PART WITHOUT PERMISSION IS PROHIBITED

Know what's below. Call before you dig. 811
1-800-382-5544 (ITS THE LAW)

No.	Submittal / Revision	By	Date

Designed By:	Drawn By:	Checked By:
BW	BW/CH/EK	JH
Issue Date:	Project No:	Scale:
8/2025	S21082	AS SHOWN

RESTORATION PLAN

Drawing No:
R7
Sheet: 26 OF 137

File: Z:\SHARED\IN CLIENTS A-L\KOKOMO\S21082 NORTH SIDE INTERCEPTOR DESIGN\06 CAD\A CURRENT FILES\1 DRAWINGS\04 - S21082 - DEMO AND RESTORATION.DWG
Saved: 8/15/2025 2:28:18 PM Plotted: 8/18/2025 8:19:39 AM Current User: Brian Waterman LastSavedBy: bwaterman

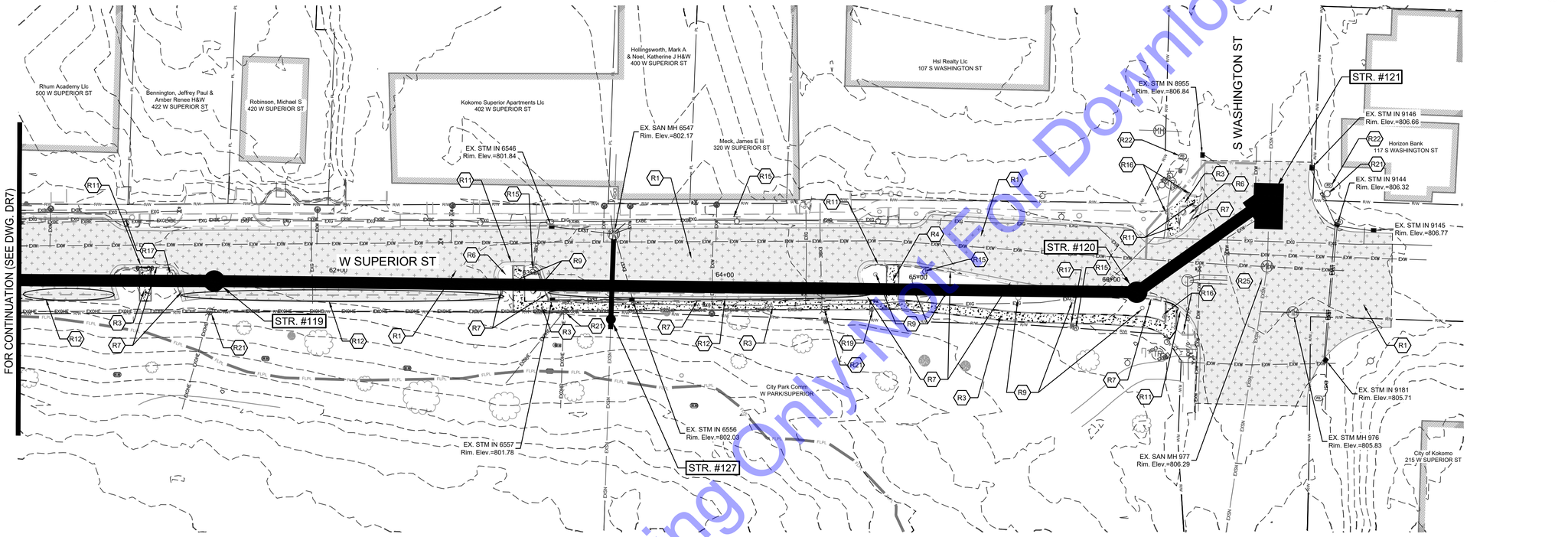

RESTORATION PLAN

SCALE: 1"=30'-0"

RESTORATION KEY NOTES

- R1 — RESURFACE ASPHALT STREET/DRIVE/PARKING LOT/ PATHWAY WITH 1-1/2" OF HMA SURFACE, TYPE B, 12.5 MM. PROVIDE STRIPING/MARKINGS TO MATCH EXISTING WHERE STRIPING/MARKINGS ARE CURRENTLY PROVIDED.
- R2 — REPLACE CONCRETE PAVEMENT DRIVEWAY.
- R3 — REPLACE CONCRETE WALK TO NEAREST JOINT.
- R4 — PLUG EXISTING SANITARY SEWER PIPE AND FILL WITH FLOWABLE FILL AND ABANDON IN PLACE.
- R5 — REPLACE EXISTING VEGETATION/LANDSCAPING TO EQUAL OR BETTER AS REQUIRED FOR INSTALLATION OF IMPROVEMENTS.
- R6 — CONTRACTOR SHALL PROVIDE FINAL GRADING AND SEEDING FOR ALL GRASSED AREAS DISTURBED DURING CONSTRUCTION TO EQUAL OR BETTER CONDITION AS APPROVED BY OWNER.
- R7 — REPLACE CURB TO NEAREST JOINT.
- R8 — CORE EXISTING STRUCTURE TO CONNECT NEW PIPE. SEE SS DRAWINGS, STRUCTURE INFORMATION, AND SPECIFICATION FOR PIPE SIZE, INVERT, AND CONNECTION REQUIREMENTS.
- R9 — REPLACE EXISTING TREES THAT HAVE BEEN REMOVED. SEE SPECIFICATIONS FOR TREE REMOVAL AND REPLACEMENT REQUIREMENTS.
- R10 — CONTRACTOR SHALL REPAIR EXISTING ASPHALT DRIVE TO ORIGINAL OR BETTER CONDITION IF DAMAGED DURING CONSTRUCTION.
- R11 — CONSTRUCT OR REPLACE ADA RAMPS AS NEEDED (SEE DWG. GR3).
- R12 — REPLACE EXISTING PARKING BLOCKS TO THEIR ORIGINAL POSITION AFTER CONSTRUCTION IS COMPLETE. ANY DAMAGED PARKING BLOCKS SHALL BE REPLACED AT THE CONTRACTOR'S EXPENSE.
- R13 — CONTRACTOR TO PROTECT/REPLACE RETAINING WALL AS NEEDED FOR NEW CURB/WALK TO BE INSTALLED.
- R14 — REPLACE EXISTING STORM STRUCTURE.
- R15 — CONTRACTOR TO REPLACE LIGHT POLE IN KIND AS NEEDED.
- R16 — CONTRACTOR TO REPLACE CROSS WALK POST IN KIND AS NEEDED.
- R17 — CONTRACTOR TO REPLACE GUARDRAIL IN KIND AS NEEDED.
- R18 — CONTRACTOR TO REPLACE BENCH IN KIND AS NEEDED.
- R19 — CONTRACTOR TO REPLACE SIGN IN KIND AS NEEDED.
- R20 — IF BRICK WALL IS DISTURBED, CONTRACTOR TO REPLACE AS NEEDED AND APPROVED BY ENGINEER AND OWNER.
- R21 — CONTRACTOR TO SUPPORT/REMOVE/RELOCATE EXISTING POWER POLES WITH GUIDANCE OF THE POWER COMPANY AS NEEDED.
- R22 — EXISTING TELEPHONE/ FIBER BOXES TO BE RELOCATED WITH GUIDANCE FROM UTILITY'S COMPANY AS NEEDED.
- R23 — CONTRACTOR TO REMOVE AND RELOCATE CSO 022 SIGN TO NEW LOCATION.
- R24 — CONTRACTOR TO REPLACE BUS STOP BENCH, STRUCTURE, CURB, SIDEWALK AND ADA RAMP AS NEEDED.
- R25 — CONTRACTOR TO REMOVE AND REPLACE TRAFFIC SIGNAL ITEMS AS NEEDED FOR INTERCEPTOR INSTALLATION INCLUDING, BUT NOT LIMITED TO, TRAFFIC SIGNAL LOOPS, CONDUIT, DETECTOR HOUSINGS, AND WIRING NECESSARY TO RECONNECT THE VEHICLE LOOP DETECTION.



TYPICAL EXISTING CROSS WALK REFERENCE PICTURE

For Public Viewing Only-Not For Downloading

COMMONWEALTH ENGINEERS, INC.
A wealth of resources to master a common goal.
https://commonwealthengineers.com/

BRIAN KREED WILSON
REGISTERED
No. PE11900866
STATE OF INDIANA
PROFESSIONAL ENGINEER
Brian Wilson 8/15/2025
Signature Date

CITY OF KOKOMO, INDIANA
HOWARD COUNTY

NORTH SIDE INTERCEPTOR
IMPROVEMENTS PROJECT

© 2025 BY COMMONWEALTH ENGINEERS, INC. ALL RIGHTS RESERVED. REPRODUCTION BY ANY METHOD IN WHOLE OR IN PART WITHOUT PERMISSION IS PROHIBITED

Know what's below. Call before you dig. 811 Indiana811
Know what's below. 811 before you dig.
1-800-382-5544 (ITS THE LAW)

No.	Submittal / Revision	By	Date

Designed By:	Drawn By:	Checked By:
BW	BW/CH/EK	JH
Issue Date:	Project No:	Scale:
8/2025	S21082	AS SHOWN

RESTORATION PLAN

Drawing No:
R8
Sheet: 27 OF 137

File: Z:\SHARED\IN CLIENTS A-L\KOKOMO\S21082 NORTH SIDE INTERCEPTOR DESIGN\06 CAD\A CURRENT FILES\1 DRAWINGS\04 - S21082 - DEMO AND RESTORATION.DWG
Saved: 8/15/2025 2:28:18 PM Plotted: 8/18/2025 8:21:20 AM Current User: Brian Waterman LastSavedBy: bwaterman

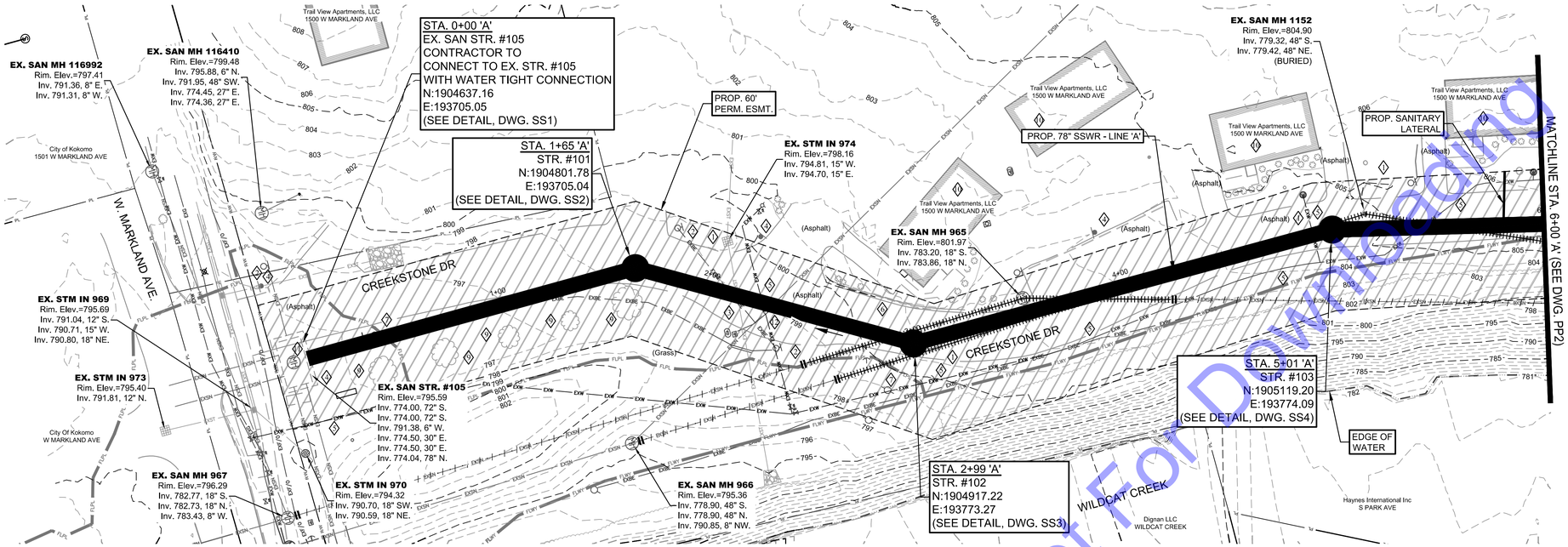

PLAN VIEW

SCALE: 1"=30'-0"

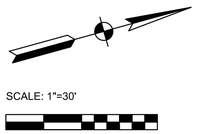

CODED NOTES

1. SEE EC DRAWINGS FOR EROSION CONTROL MEASURES.
2. CONTRACTOR TO VERIFY EX. UTILITY LOCATIONS PRIOR TO ANY CONSTRUCTION. IN THE EVENT OF UTILITY CONFLICTS, CONTRACTOR SHALL NOTIFY UTILITY TO RELOCATE TO AVOID CONFLICTS.
3. CONTRACTOR TO PROTECT ANY EXISTING STORM SEWER AND STRUCTURES AND/OR FIELD TILE ENCOUNTERED DURING CONSTRUCTION. IF ENCOUNTERED AND DISTURBED, CONTRACTOR TO REPLACE TO A CONDITION EQUAL TO OR BETTER.
4. DAMAGE TO SIGNS TO BE CONTRACTOR RESPONSIBILITY. REMOVAL AND REPLACEMENT OF SIGNS TO BE CONSIDERED INCIDENTAL TO PROJECT.
5. CONTRACTOR TO FIELD VERIFY LOCATION AND DEPTH OF EXISTING WATER MAIN PRIOR TO CONSTRUCTION ON LINE 'A'. MAINTAIN MINIMUM REQUIRED SEPARATION DURING INSTALLATION OF LINE 'A'. SUPPORT EXISTING WATER MAIN DURING CONSTRUCTION.
6. CONTRACTOR TO PROTECT EXISTING HEADWALLS DURING CONSTRUCTION. ANY HEADWALLS DISTURBED DURING CONSTRUCTING ACTIVITIES WILL NEED TO BE REMOVED AND REPLACED IN KIND.
7. CONTRACTOR TO PROTECT ALL UTILITY/LIGHT POLES DURING CONSTRUCTION. COORDINATE WITH ELECTRIC UTILITY SHOULD POLES REQUIRE TEMPORARY SUPPORT.
8. PROTECT ALL OVERHEAD UTILITIES DURING CONSTRUCTION. COORDINATE WITH UTILITY IF TEMPORARY SUPPORTING OF OVERHEAD UTILITY IS REQUIRED TO COMPLETE WORK.
9. REMOVE TREES/BUSHES AS NEEDED FOR CONSTRUCTION. SEE RESTORATION SHEETS FOR REPLACEMENT OF TREES/BUSHES AFTER CONSTRUCTION.
10. CONTRACTOR SHALL CONFIRM THE LOCATION OF EXISTING SANITARY LATERAL CONNECTION. PROVIDE TO ENGINEER/OWNER. IF THE EXISTING LATERAL IS CONNECTED TO A LINE TO BE ABANDONED, RECONNECT EXISTING LATERAL TO LINE 'A'.
11. EARLY ACTION: CONTRACTOR SHALL CONFIRM THE ELEVATION OF EX. STR 105. PRIOR TO CONSTRUCTION, CONTRACTOR TO FIELD VERIFY IF WALL HAS BEEN CORED. PROVIDE INFORMATION TO ENGINEER/OWNER.
12. EARLY ACTION: CONTRACTOR TO FIELD VERIFY LOCATION AND DEPTH OF EXISTING 8" SANITARY PRIOR TO CONSTRUCTION OF LINE 'A'. NOTIFY ENGINEER/OWNER IF PROBLEM OCCURS.

NOTE:
THE EXISTING AND PROPOSED PROFILE GRADES ARE BASED ON THE ELEVATIONS AT THE CENTERLINE OF THE PROPOSED SANITARY SEWER.

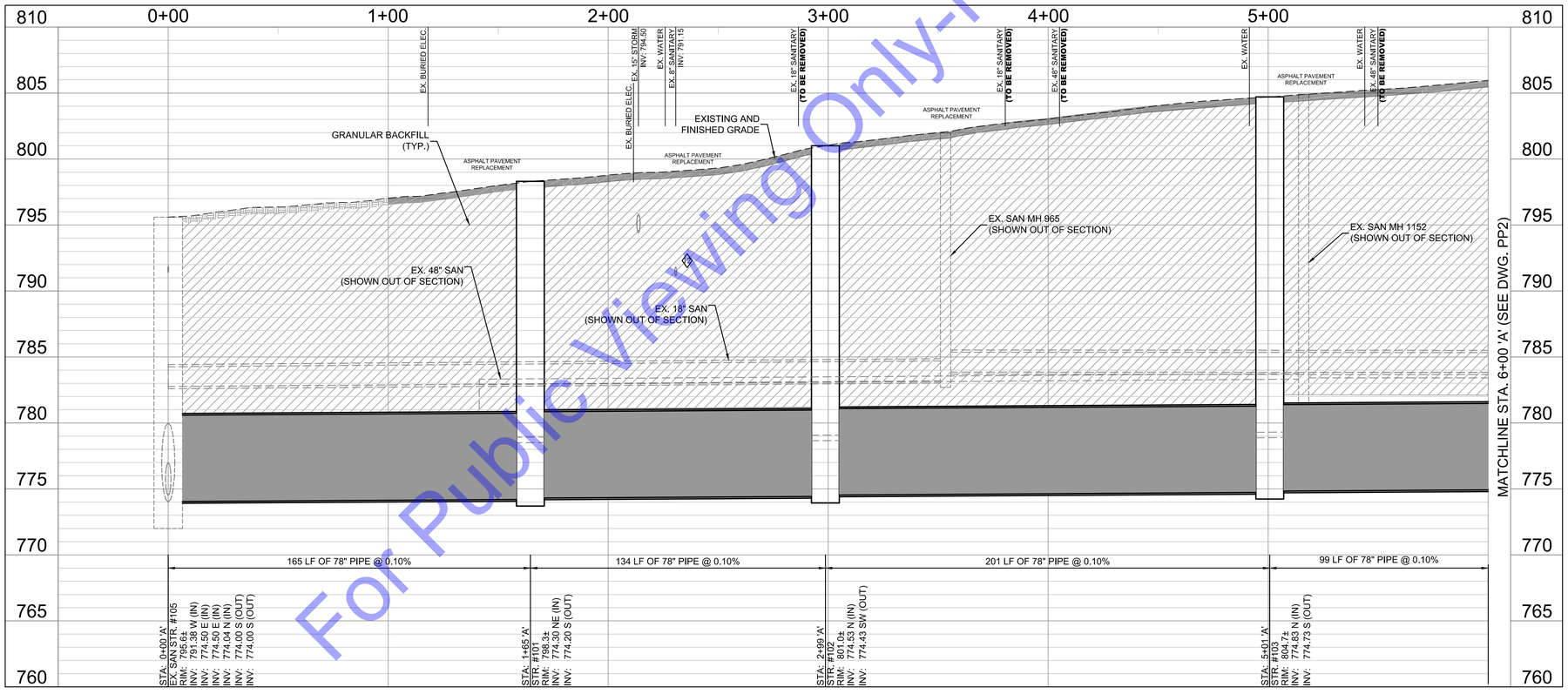

PROFILE - LINE 'A'

HORIZONTAL SCALE: 1"=30'-0"

VERTICAL SCALE: 1"=5'-0"

For Public Viewing Only-Not For Downloading

COMMONWEALTH ENGINEERS, INC.
A wealth of resources to master a common goal.
https://commonwealthengineers.com/

BRIAN KREED WILSON
REGISTERED
No. PE11900866
STATE OF INDIANA
PROFESSIONAL ENGINEER
Brian Wilson
Signature
8/15/2025
Date

CITY OF KOKOMO, INDIANA
HOWARD COUNTY

NORTH SIDE INTERCEPTOR
IMPROVEMENTS PROJECT

© 2025 BY COMMONWEALTH ENGINEERS, INC. ALL RIGHTS RESERVED. REPRODUCTION BY ANY METHOD, IN WHOLE OR IN PART WITHOUT PERMISSION IS PROHIBITED

Indiana 811
Know what's below. Call before you dig.
1-800-382-5544 (ITS THE LAW)

No.	Submittal / Revision	By	Date

Designed By:	Drawn By:	Checked By:
BW	BW/CH/EK	JH
Issue Date:	Project No:	Scale:
8/2025	S21082	AS SHOWN

SANITARY SEWER PLAN & PROFILE - LINE 'A' - STATION 0+00-6+00

Drawing No:
PP1
Sheet: 28 OF 137

File: Z:\SHARED\IN CLIENTS A-L\KOKOMO\S21082 NORTH SIDE INTERCEPTOR DESIGN\06 CAD\A CURRENT FILES\1 DRAWINGS\05 - S21082 - PLAN AND PROFILE.DWG
Saved: 8/13/2025 10:35:44 AM Plotted: 8/13/2025 10:40:12 AM Current User: Brian Waterman LastSavedBy: bwaterman

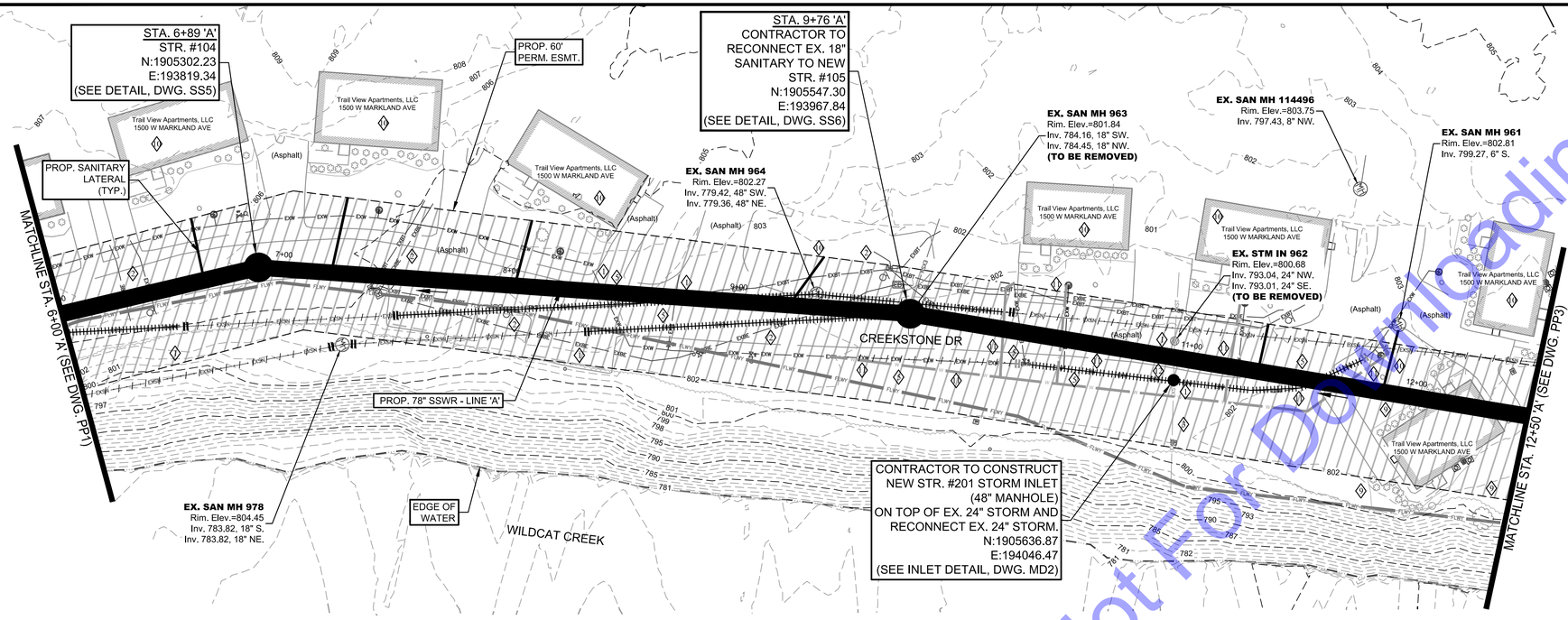

PLAN VIEW
SCALE: 1"=30'-0"

SCALE: 1"=30'
30' 0 30'

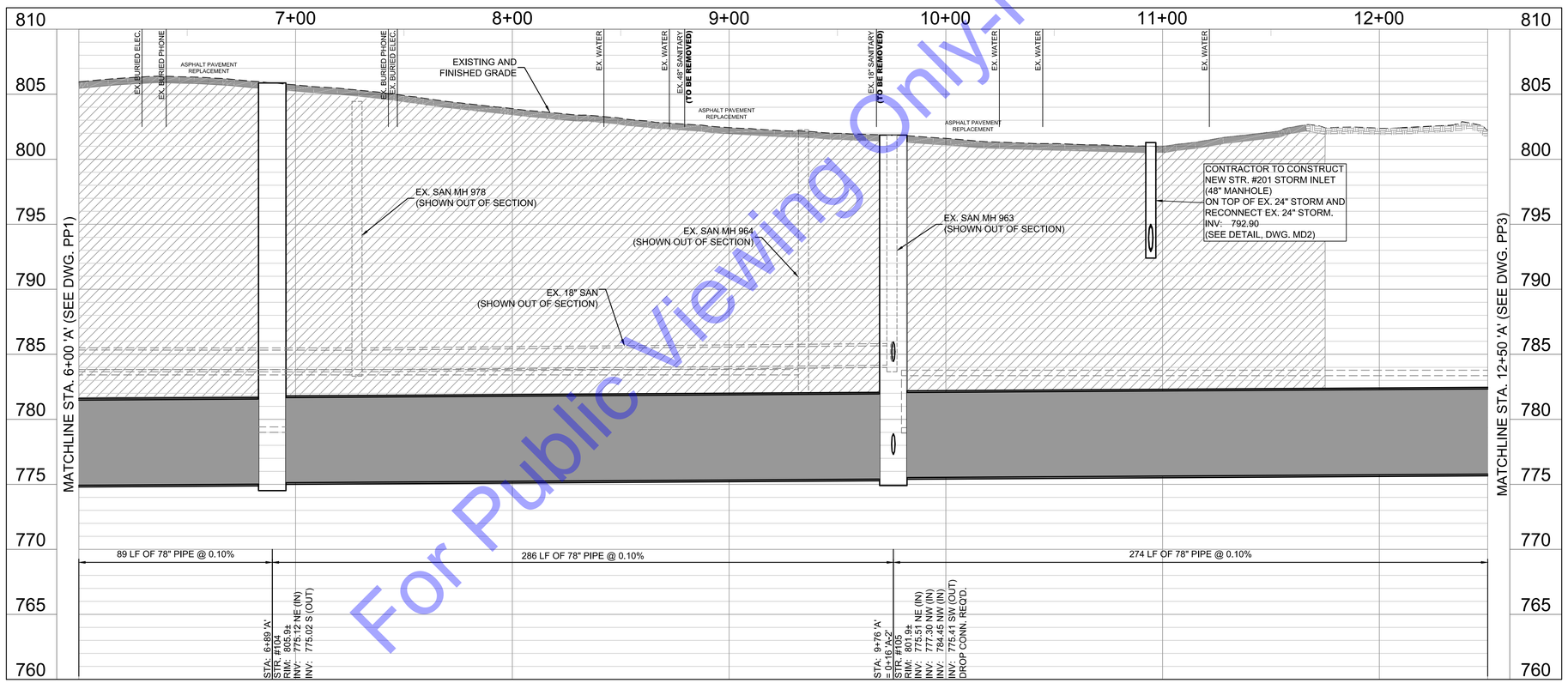

PROFILE - LINE 'A'
HORIZONTAL SCALE: 1"=30'-0"
VERTICAL SCALE: 1"=5'-0"

CODED NOTES

1. SEE EC DRAWINGS FOR EROSION CONTROL MEASURES.
2. CONTRACTOR TO VERIFY EX. UTILITY LOCATIONS PRIOR TO ANY CONSTRUCTION. IN THE EVENT OF UTILITY CONFLICTS, CONTRACTOR SHALL NOTIFY UTILITY TO RELOCATE TO AVOID CONFLICTS.
3. CONTRACTOR TO PROTECT ANY EXISTING STORM SEWER AND STRUCTURES AND/OR FIELD TILE ENCOUNTERED DURING CONSTRUCTION. IF ENCOUNTERED AND DISTURBED, CONTRACTOR TO REPLACE TO A CONDITION EQUAL TO OR BETTER.
4. DAMAGE TO SIGNS TO BE CONTRACTOR RESPONSIBILITY. REMOVAL AND REPLACEMENT OF SIGNS TO BE CONSIDERED INCIDENTAL TO PROJECT.
5. CONTRACTOR TO FIELD VERIFY LOCATION AND DEPTH OF EXISTING WATER MAIN PRIOR TO CONSTRUCTION ON LINE 'A'. MAINTAIN MINIMUM REQUIRED SEPARATION DURING INSTALLATION OF LINE 'A'. SUPPORT EXISTING WATER AS NEEDED DURING CONSTRUCTION.
6. CONTRACTOR TO PROTECT EXISTING HEADWALLS DURING CONSTRUCTION. ANY HEADWALLS DISTURBED DURING CONSTRUCTING ACTIVITIES WILL NEED TO BE REMOVED AND REPLACED IN KIND.
7. CONTRACTOR TO PROTECT ALL UTILITY/LIGHT POLES DURING CONSTRUCTION. COORDINATE WITH ELECTRIC UTILITY SHOULD POLES REQUIRE TEMPORARY SUPPORT.
8. PROTECT ALL OVERHEAD UTILITIES DURING CONSTRUCTION. COORDINATE WITH UTILITY IF TEMPORARY SUPPORTING OF OVERHEAD UTILITY IS REQUIRED TO COMPLETE WORK.
9. REMOVE TREES/BUSHES AS NEEDED FOR CONSTRUCTION. SEE RESTORATION SHEETS FOR REPLACEMENT OF TREES/BUSHES AFTER CONSTRUCTION.
10. CONTRACTOR SHALL CONFIRM THE LOCATION OF EXISTING SANITARY LATERAL CONNECTION. PROVIDE TO ENGINEER/OWNER. IF THE EXISTING LATERAL IS CONNECTED TO A LINE TO BE ABANDONED, RECONNECT EXISTING LATERAL TO NEW SANITARY LATERAL.
11. CONTRACTOR TO REMOVE ABANDONED WATER MAIN AS NEEDED TO CONSTRUCT LINE 'A' AND DISPOSE OF LAWFULLY. CONTRACTOR TO PROTECT ALL WATER SERVICES DURING CONSTRUCTION.
12. FOR NEW STRUCTURE #201, CONTRACTOR TO USE MASTIC TO SEAL ALL JOINTS, BOOT/GROUT PIPE PENETRATIONS, AND GROUT ALL PICK HOLES PER IDEM SEWER/WATER SEPARATION REQUIREMENTS.

NOTE:
THE EXISTING AND PROPOSED PROFILE GRADES ARE BASED ON THE ELEVATIONS AT THE CENTERLINE OF THE PROPOSED SANITARY SEWER.

COMMONWEALTH ENGINEERS, INC.
A wealth of resources to master a common goal.
https://commonwealthengineers.com/

BRIAN KREED WILSON
REGISTERED
No. PE11900866
STATE OF INDIANA
PROFESSIONAL ENGINEER
Brian Wilson 8/15/2025
Signature Date

CITY OF KOKOMO, INDIANA
HOWARD COUNTY

NORTH SIDE INTERCEPTOR
IMPROVEMENTS PROJECTS

© 2025 BY COMMONWEALTH ENGINEERS, INC. ALL RIGHTS RESERVED. REPRODUCTION OF ANY METHOD IN WHOLE OR IN PART WITHOUT PERMISSION IS PROHIBITED

Know what's below. Call before you dig.
1-800-382-5544 (ITS THE LAW)

No.	Submittal / Revision	By	Date

Designed By:	Drawn By:	Checked By:
BW	BW/CH/EK	JH
Issue Date: 8/2025	Project No: S21082	Scale: AS SHOWN

SANITARY SEWER PLAN & PROFILES - LINE 'A' - STATION 6+00-12+50

Drawing No:
PP2
Sheet: 29 OF 137

For Public Viewing Only-Not For Downloading

File: Z:\SHARED\IN CLIENTS A-L\KOKOMO\S21082 NORTH SIDE INTERCEPTOR DESIGN\06 CAD\A CURRENT FILES\1 DRAWINGS\05 - S21082 - PLAN AND PROFILE.DWG
Saved: 8/13/2025 10:35:44 AM Plotted: 8/13/2025 10:41:01 AM Current User: Brion Waterman LastSavedBy: bwaterman

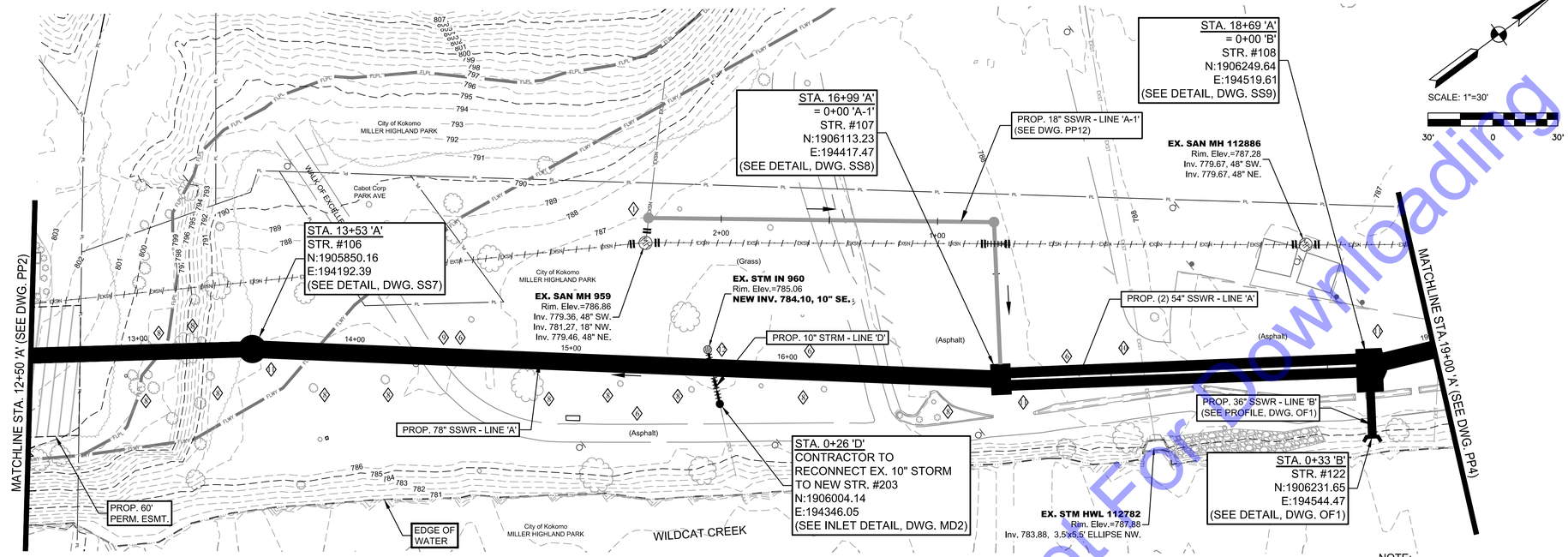

PLAN VIEW
SCALE: 1"=30'-0"

NOTE:
THE EXISTING AND PROPOSED PROFILE GRADES ARE BASED ON THE ELEVATIONS AT THE CENTERLINE OF THE PROPOSED SANITARY SEWER.

CODED NOTES

1. SEE EC DRAWINGS FOR EROSION CONTROL MEASURES.
2. CONTRACTOR TO VERIFY EX. UTILITY LOCATIONS PRIOR TO ANY CONSTRUCTION. IN THE EVENT OF UTILITY CONFLICTS, CONTRACTOR SHALL NOTIFY UTILITY TO RELOCATE TO AVOID CONFLICTS.
3. CONTRACTOR TO PROTECT ANY EXISTING STORM SEWER AND STRUCTURES AND/OR FIELD TILE ENCOUNTERED DURING CONSTRUCTION. IF ENCOUNTERED AND DISTURBED, CONTRACTOR TO REPLACE TO A CONDITION EQUAL TO OR BETTER.
4. DAMAGE TO SIGNS TO BE CONTRACTOR RESPONSIBILITY. REMOVAL AND REPLACEMENT OF SIGNS TO BE CONSIDERED INCIDENTAL TO PROJECT.
5. CONTRACTOR TO FIELD VERIFY LOCATION AND DEPTH OF EXISTING WATER MAIN PRIOR TO CONSTRUCTION ON LINE 'A'. MAINTAIN MINIMUM REQUIRED SEPARATION DURING INSTALLATION OF LINE 'A'.
6. BETWEEN STA. 13+53 TO 16+99, CONTRACTOR SHALL PROVIDE MACWRAP OR EQUAL AT ALL JOINTS - SEE SPECIFICATIONS FOR DETAILS.
7. CONTRACTOR TO PROTECT ALL UTILITY/LIGHT POLES AND OVERHEAD LINES DURING CONSTRUCTION. COORDINATE WITH ELECTRIC UTILITY SHOULD POLES REQUIRE TEMPORARY SUPPORT.
8. REMOVE TREES/BUSHES AS NEED FOR CONSTRUCTION. SEE RESTORATION SHEETS FOR REPLACEMENT OF TREES/BUSHES AFTER CONSTRUCTION.
9. CONTRACTOR TO REPLACE ASPHALT PATHS AND/OR CONCRETE SIDE WALKS AS NEEDED FOR CONSTRUCTION.
10. EARLY ACTION: CONTRACTOR SHALL CONFIRM THE ELEVATION AND DEPTH OF THE EXISTING STORM SEWER PRIOR TO CONSTRUCTION AND PROVIDE TO ENGINEER/OWNER.
11. CONTRACTOR TO USE BOLT DOWN CASTING AND LID IN FLOODWAY. SEE MD SHEETS FOR DETAIL.
12. CONTRACTOR TO REMOVE EXISTING 10" STORM AS NEEDED TO CONSTRUCT LINE 'A'. RECONNECT NEW STORM TO EXISTING STM IN 960 AT NEW INVERT. CONSTRUCT NEW 10" STORM OVER LINE 'A' AND RECONNECT TO EXISTING STORM TO CREEK.

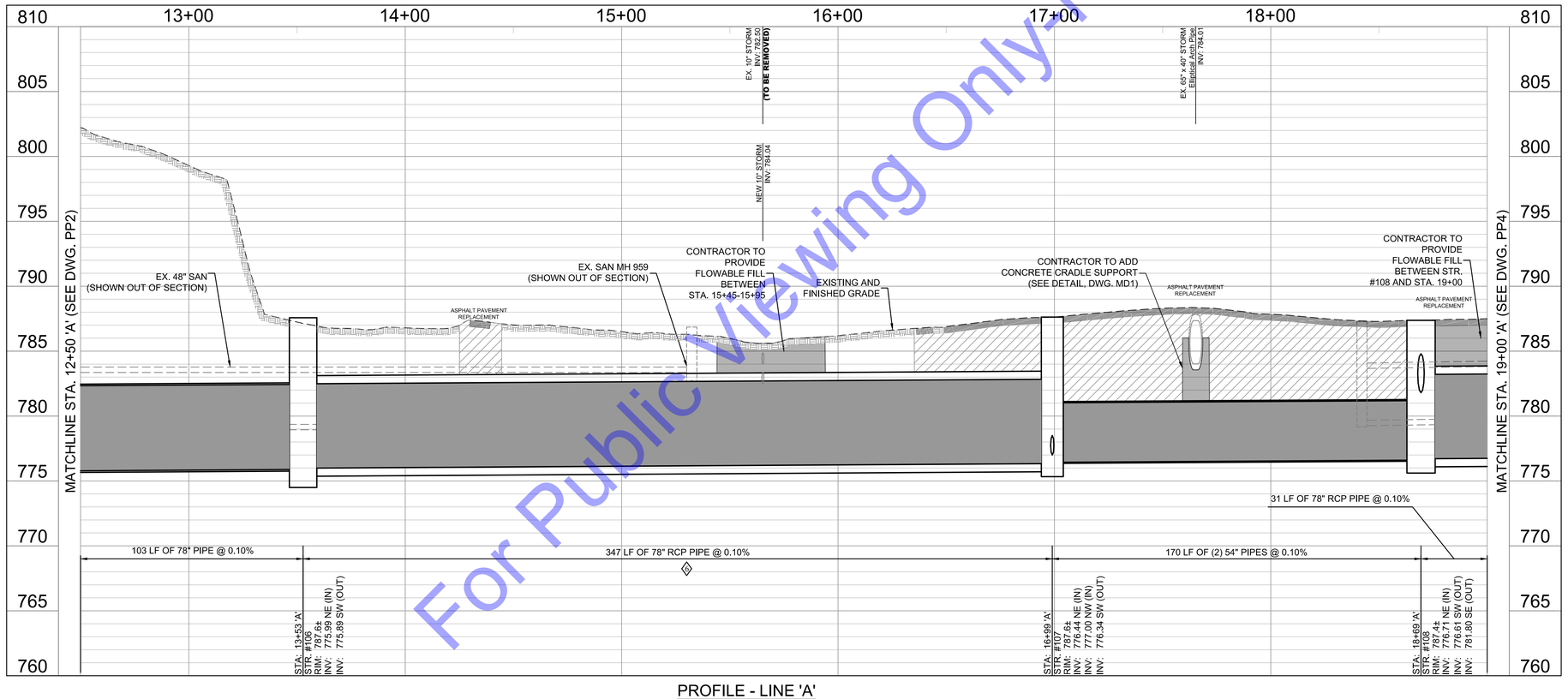

PROFILE - LINE 'A'
HORIZONTAL SCALE: 1"=30'-0"
VERTICAL SCALE: 1"=5'-0"

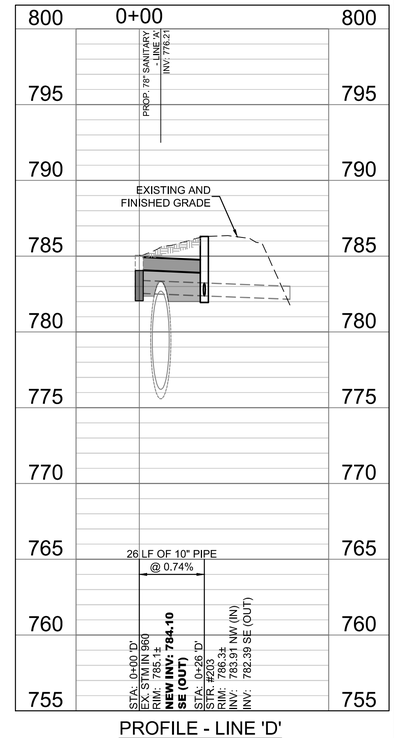

PROFILE - LINE 'D'
HORIZONTAL SCALE: 1"=30'-0"
VERTICAL SCALE: 1"=5'-0"

For Public Viewing Only-Not For Downloading

COMMONWEALTH ENGINEERS, INC.
A wealth of resources to master a common goal.
https://commonwealthengineers.com/

BRIAN KREED WILSON
REGISTERED
No. PE11900866
STATE OF INDIANA
PROFESSIONAL ENGINEER
Brian Wilson 8/15/2025
Signature Date

CITY OF KOKOMO, INDIANA
HOWARD COUNTY

NORTH SIDE INTERCEPTOR
IMPROVEMENTS PROJECT

© 2025 BY COMMONWEALTH ENGINEERS, INC. ALL RIGHTS RESERVED. REPRODUCTION BY ANY METHOD IN WHOLE OR IN PART WITHOUT PERMISSION IS PROHIBITED

Indiana811 Know what's below. Call before you dig. 1-800-382-5544 (ITS THE LAW)

No.	Submittal Revision	By	Date

Designed By:	Drawn By:	Checked By:
BW	BW/CH/EK	JH
Issue Date: 8/2025	Project No: S21082	Scale: AS SHOWN

SANITARY SEWER PLAN & PROFILES - LINE 'A' - STATION 12+50-19+00; LINE 'D' - STATION 0+00-0+32

Drawing No: PP3
Sheet: 30 OF 137

File: Z:\SHARED\IN CLIENTS A-L\KOKOMO\S21082 NORTH SIDE INTERCEPTOR DESIGN\06 CAD\A CURRENT FILES\1 DRAWINGS\05 - S21082 - PLAN AND PROFILE.DWG
Saved: 8/15/2025 1:42:10 PM Plotted: 8/18/2025 8:27:15 AM Current User: Brian Waterman LastSavedBy: bwaterman

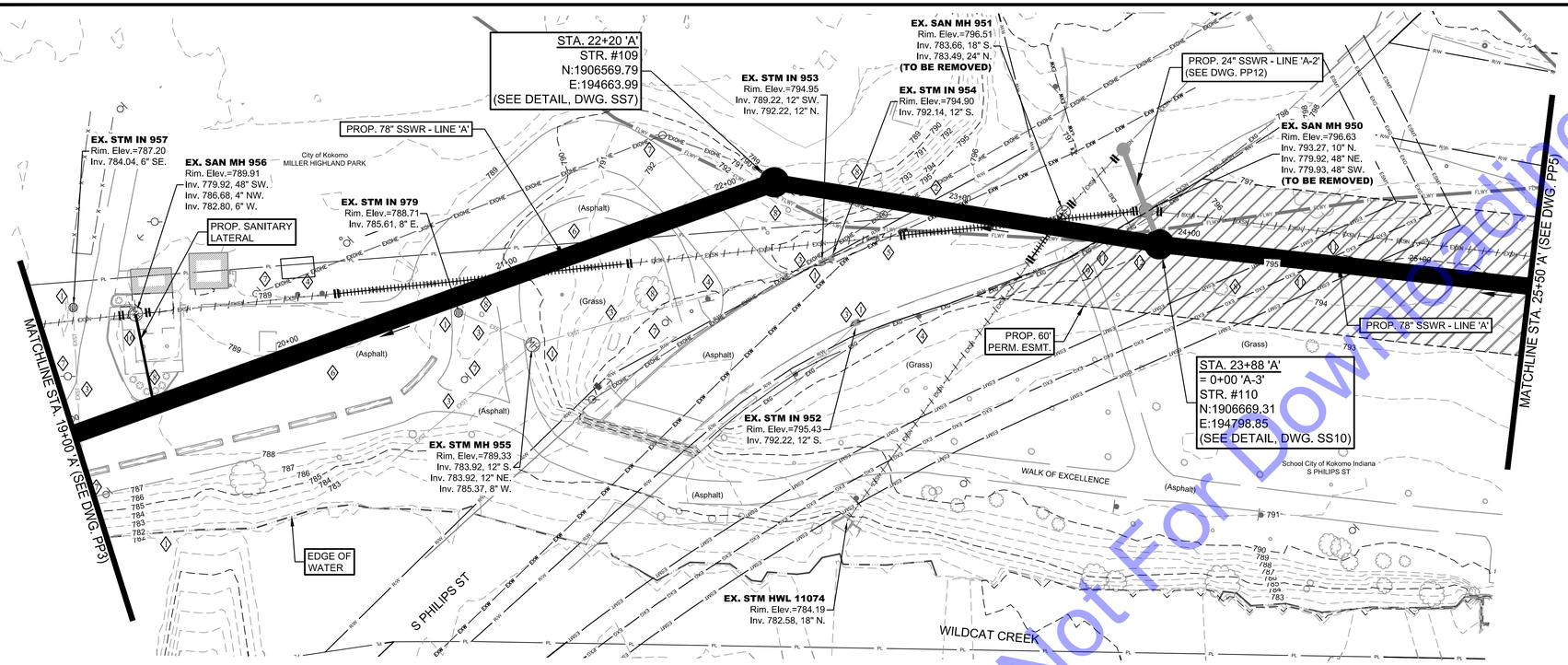

PLAN VIEW
SCALE: 1"=30'-0"

NOTE:
THE EXISTING AND PROPOSED PROFILE GRADES ARE BASED ON THE ELEVATIONS AT THE CENTERLINE OF THE PROPOSED SANITARY SEWER.

SCALE: 1"=30'
30' 0 30'

CODED NOTES

1. SEE EC DRAWINGS FOR EROSION CONTROL MEASURES.
2. CONTRACTOR TO VERIFY EX. UTILITY LOCATIONS PRIOR TO ANY CONSTRUCTION. IN THE EVENT OF UTILITY CONFLICTS, CONTRACTOR SHALL NOTIFY UTILITY TO RELOCATE TO AVOID CONFLICTS.
3. CONTRACTOR TO PROTECT ANY EXISTING STORM SEWER AND STRUCTURES AND/OR FIELD TILE ENCOUNTERED DURING CONSTRUCTION. IF ENCOUNTERED AND DISTURBED, CONTRACTOR TO REPLACE TO A CONDITION EQUAL TO OR BETTER.
4. DAMAGE TO SIGNS TO BE CONTRACTOR RESPONSIBILITY. REMOVAL AND REPLACEMENT OF SIGNS TO BE CONSIDERED INCIDENTAL TO PROJECT.
5. CONTRACTOR TO FIELD VERIFY LOCATION AND DEPTH OF EXISTING WATER MAIN PRIOR TO CONSTRUCTION ON LINE 'A'. MAINTAIN MINIMUM REQUIRED SEPARATION DURING INSTALLATION OF LINE 'A'.
6. BETWEEN STA. 16+99 TO 22+20, CONTRACTOR SHALL PROVIDE MACWRAP OR EQUAL AT ALL JOINTS - SEE SPECIFICATIONS FOR DETAILS.
7. CONTRACTOR TO PROTECT ALL UTILITY/LIGHT POLES AND OVERHEAD LINES DURING CONSTRUCTION. COORDINATE WITH ELECTRIC UTILITY SHOULD POLES REQUIRE TEMPORARY SUPPORT.
8. REMOVE TREES/BUSHES AS NEED FOR CONSTRUCTION. SEE RESTORATION SHEETS FOR REPLACEMENT OF TREES/BUSHES AFTER CONSTRUCTION.
9. CONTRACTOR TO REPLACE ASPHALT PATHS AND/OR CONCRETE SIDE WALKS AS NEEDED FOR CONSTRUCTION (SEE RESTORATION SHEETS).
10. CONTRACTOR TO RECONNECT EX. SAN. MH 956 TO LINE 'A' WITH NEW 6" SANITARY LATERAL. PLUG EX. 48" UPSTREAM AND DOWNSTREAM AND GROUT UP TO EX. 6" INVERT.
11. CONTRACTOR TO FIELD VERIFY LOCATION AND DEPTH OF EXISTING GAS MAIN PRIOR TO CONSTRUCTION ON LINE 'A'. PROVIDE TO ENGINEER/OWNER PRIOR TO CONSTRUCTION.
12. CONTRACTOR TO USE BOLT DOWN CASTING AND LID IN FLOODWAY. SEE MD SHEETS FOR DETAIL.

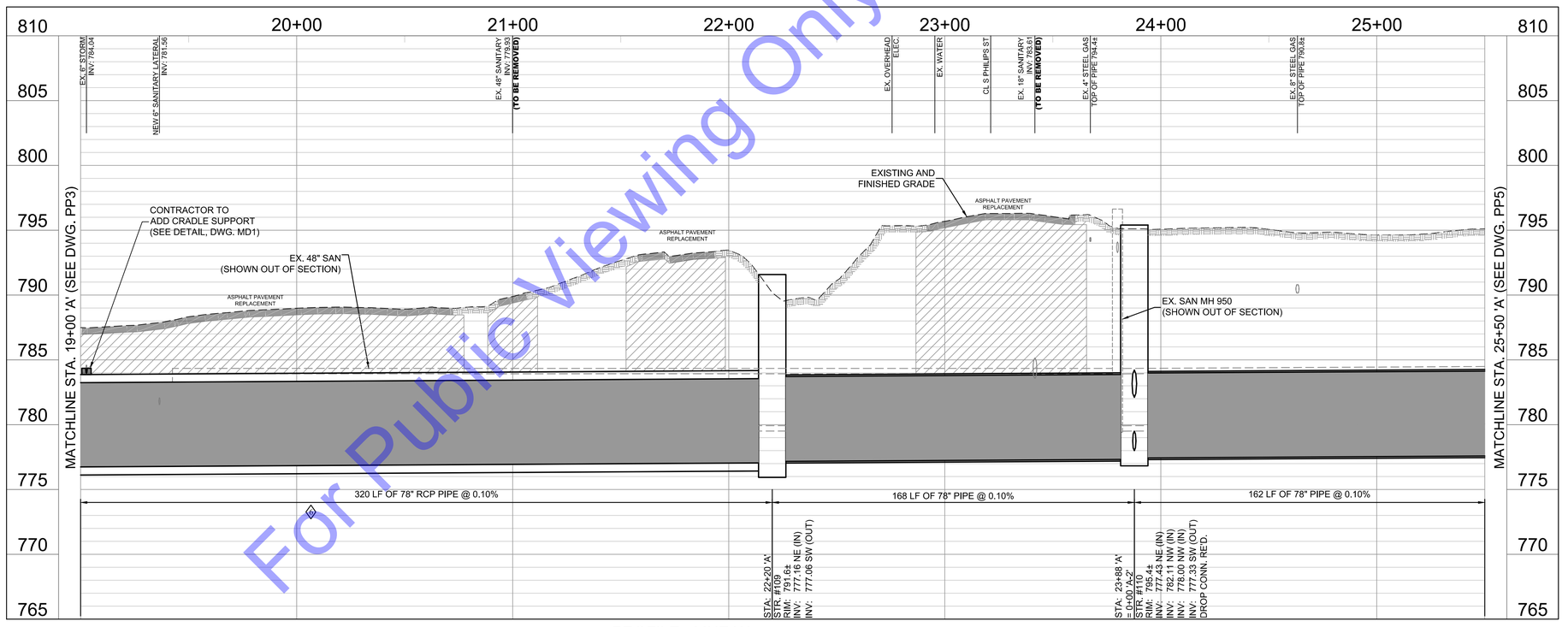

PROFILE - LINE 'A'
HORIZONTAL SCALE: 1"=30'-0"
VERTICAL SCALE: 1"=5'-0"

For Public Viewing Only-Not For Download

COMMONWEALTH ENGINEERS, INC.
A wealth of resources to master a common goal.
https://commonwealthengineers.com/

BRIAN KREED WILSON
REGISTERED
No. PE11900866
STATE OF INDIANA
PROFESSIONAL ENGINEER
Brian Wilson
Signature
8/15/2025
Date

CITY OF KOKOMO, INDIANA
HOWARD COUNTY

NORTH SIDE INTERCEPTOR
IMPROVEMENTS PROJECT

© 2025 BY COMMONWEALTH ENGINEERS, INC. ALL RIGHTS RESERVED. REPRODUCTION BY ANY METHOD IN WHOLE OR IN PART WITHOUT PERMISSION IS PROHIBITED

Indiana 811
Know what's below. Call before you dig.
1-800-382-5544 (ITS THE LAW)
Know what's below. 811 before you dig.

No.	Submittal / Revision	By	Date

Designed By:	Drawn By:	Checked By:
BW	BW/CH/EK	JH
Issue Date: 8/2025	Project No: S21082	Scale: AS SHOWN

SANITARY SEWER PLAN & PROFILE - LINE 'A' - STATION 19+00-25+50

Drawing No:
PP4
Sheet: 31 OF 137

File: Z:\SHARED\IN CLIENTS A-L\KOKOMO\S21082 NORTH SIDE INTERCEPTOR DESIGN\06 CAD\A CURRENT FILES\1 DRAWINGS\05 - S21082 - PLAN AND PROFILE.DWG
Saved: 8/8/2025 1:14:30 PM Plotted: 8/11/2025 8:21:28 AM Current User: Bryce Persinger LastSavedBy: bpersinger

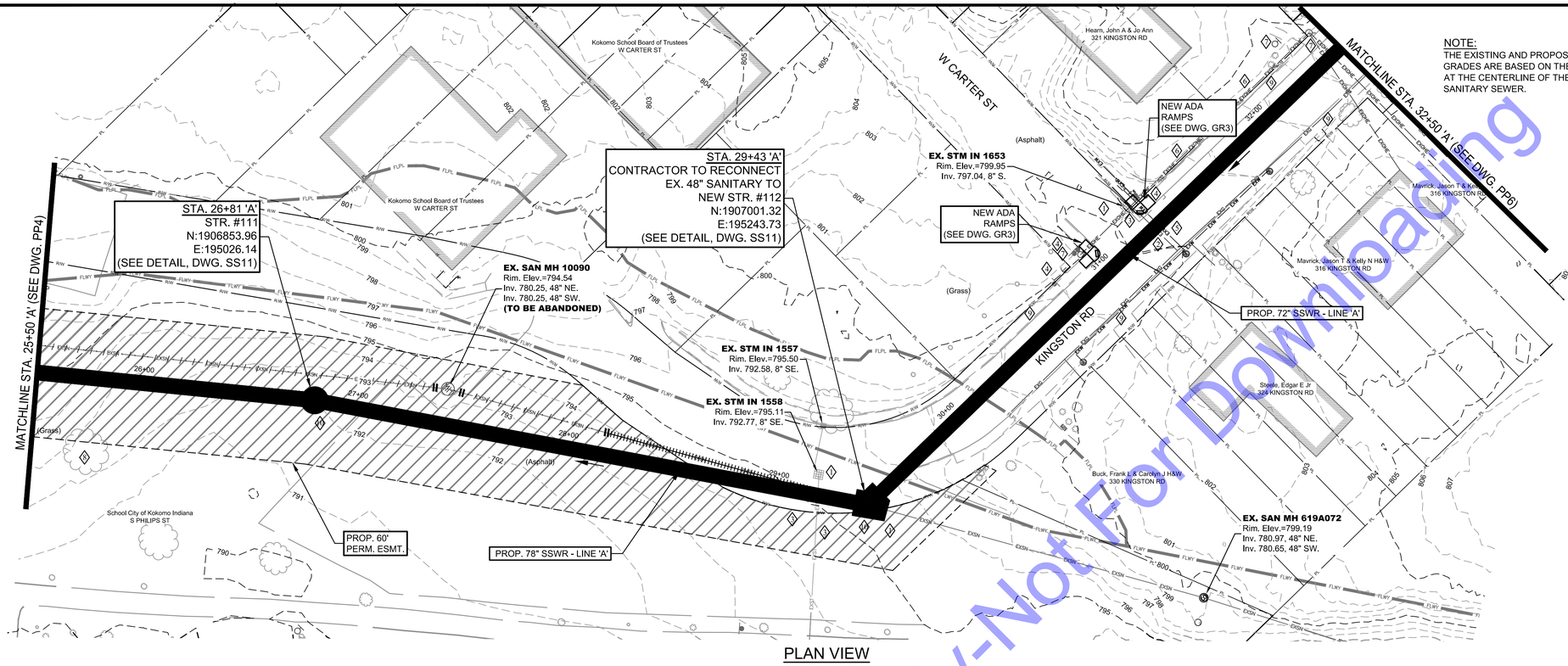

PLAN VIEW
SCALE: 1"=30'-0"

NOTE:
THE EXISTING AND PROPOSED PROFILE GRADES ARE BASED ON THE ELEVATIONS AT THE CENTERLINE OF THE PROPOSED SANITARY SEWER.

SCALE: 1"=30'
30' 0 30'

CODED NOTES

1. SEE EC DRAWINGS FOR EROSION CONTROL MEASURES.
2. CONTRACTOR TO VERIFY EX. UTILITY LOCATIONS PRIOR TO ANY CONSTRUCTION. IN THE EVENT OF UTILITY CONFLICTS, CONTRACTOR SHALL NOTIFY UTILITY TO RELOCATE TO AVOID CONFLICTS.
3. CONTRACTOR TO PROTECT ANY EXISTING STORM SEWER AND STRUCTURES AND/OR FIELD TILE ENCOUNTERED DURING CONSTRUCTION. IF ENCOUNTERED AND DISTURBED, CONTRACTOR TO REPLACE TO A CONDITION EQUAL TO OR BETTER.
4. DAMAGE TO SIGNS TO BE CONTRACTOR RESPONSIBILITY. REMOVAL AND REPLACEMENT OF SIGNS TO BE CONSIDERED INCIDENTAL TO PROJECT.
5. CONTRACTOR TO FIELD VERIFY LOCATION AND DEPTH OF EXISTING WATER MAIN PRIOR TO CONSTRUCTION ON LINE 'A'. MAINTAIN MINIMUM REQUIRED SEPARATION DURING INSTALLATION OF LINE 'A'.
6. CONTRACTOR TO PROTECT EXISTING HEADWALLS DURING CONSTRUCTION. ANY HEADWALLS DISTURBED DURING CONSTRUCTING ACTIVITIES WILL NEED TO BE REMOVED AND REPLACED IN KIND.
7. CONTRACTOR TO PROTECT ALL UTILITY/LIGHT POLES AND OVERHEAD LINES DURING CONSTRUCTION. COORDINATE WITH ELECTRIC UTILITY SHOULD POLES REQUIRE TEMPORARY SUPPORT.
8. REMOVE TREES/BUSHES AS NEED FOR CONSTRUCTION. SEE RESTORATION SHEETS FOR REPLACEMENT OF TREES/BUSHES AFTER CONSTRUCTION.
9. CONTRACTOR TO REPLACE ASPHALT PATHS AND/OR CONCRETE SIDE WALKS AS NEEDED FOR CONSTRUCTION (SEE RESTORATION SHEETS).
10. CONTRACTOR TO USE BOLT DOWN CASTING AND LID IN FLOODWAY, SEE MD SHEETS FOR DETAIL.

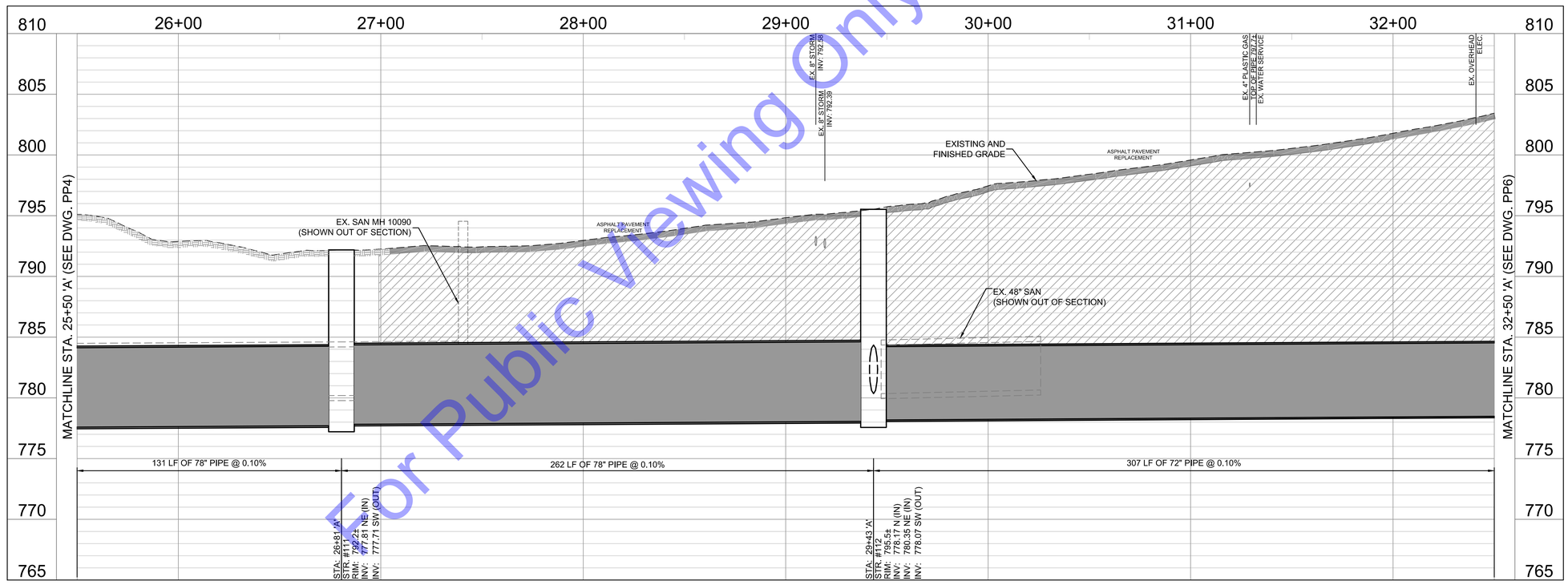

PROFILE - LINE 'A'
HORIZONTAL SCALE: 1"=30'-0"
VERTICAL SCALE: 1"=5'-0"

For Public Viewing Only-Not For Downloading

COMMONWEALTH ENGINEERS, INC.
A wealth of resources to master a common goal.
https://commonwealthengineers.com/

BRIAN KREED WILSON
REGISTERED
No. PE11900866
STATE OF INDIANA
PROFESSIONAL ENGINEER
Brian Wilson
Signature
8/15/2025
Date

CITY OF KOKOMO, INDIANA
HOWARD COUNTY

NORTH SIDE INTERCEPTOR IMPROVEMENTS PROJECT

© 2025 BY COMMONWEALTH ENGINEERS, INC. ALL RIGHTS RESERVED. REPRODUCTION BY ANY METHOD IN WHOLE OR IN PART WITHOUT PERMISSION IS PROHIBITED

Indiana811 Know what's below. Call before you dig.
Know what's below. 811 before you dig.
1-800-382-5544
(ITS THE LAW)

No.	Submittal Revision	By	Date

Designed By:	Drawn By:	Checked By:
BW	BW/CH/EK	JH
Issue Date:	Project No:	Scale:
8/2025	S21082	AS SHOWN

SANITARY SEWER PLAN & PROFILE - LINE 'A' - STATION 25+50-32+50

Drawing No:
PP5
Sheet: 32 OF 137

File: Z:\SHARED\IN CLIENTS A-L\KOKOMO\S21082 NORTH SIDE INTERCEPTOR DESIGN\06 CAD\A CURRENT FILES\1 DRAWINGS\05 - S21082 - PLAN AND PROFILE.DWG
Saved: 8/8/2025 1:14:30 PM Plotted: 8/11/2025 8:22:05 AM Current User: Bryce Persinger LastSavedBy: bpersinger

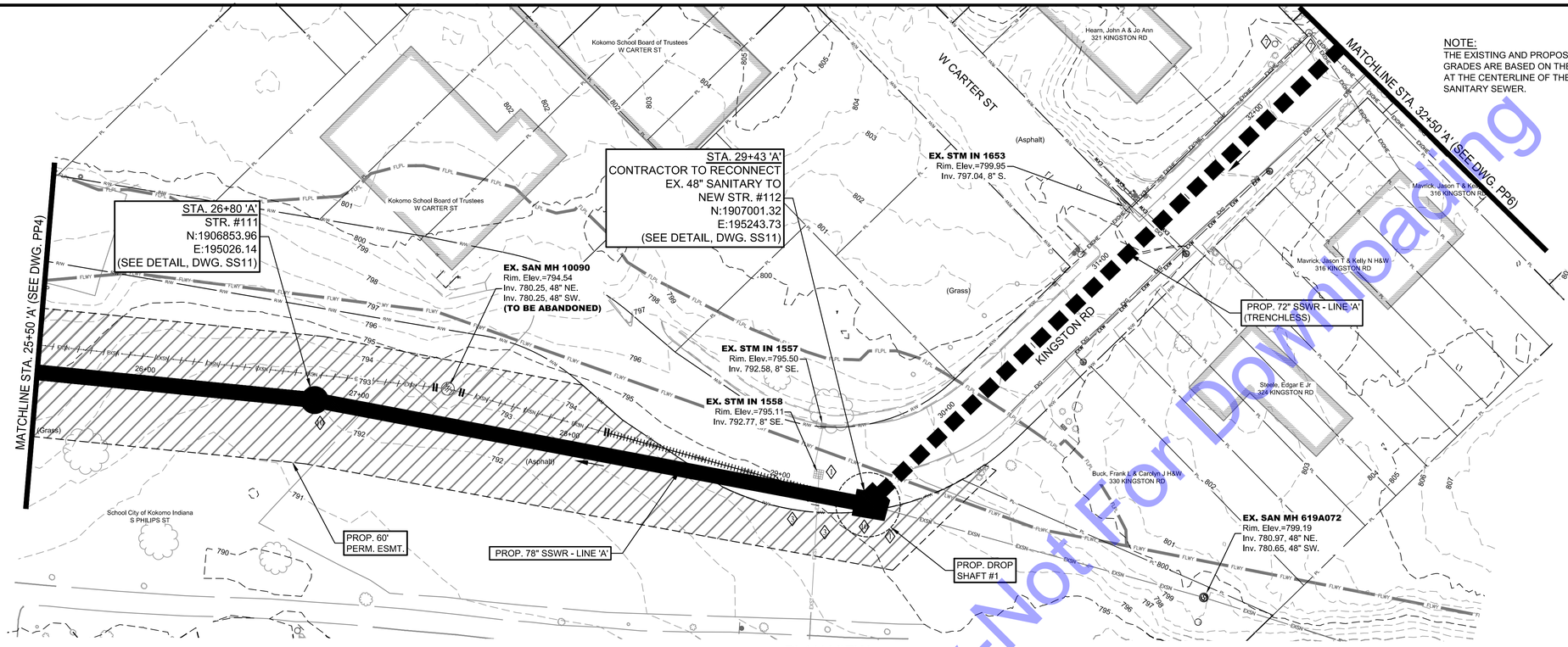

PLAN VIEW
SCALE: 1"=30'-0"

NOTE:
THE EXISTING AND PROPOSED PROFILE GRADES ARE BASED ON THE ELEVATIONS AT THE CENTERLINE OF THE PROPOSED SANITARY SEWER.

SCALE: 1"=30'
30' 0 30'

CODED NOTES

1. SEE EC DRAWINGS FOR EROSION CONTROL MEASURES.
2. CONTRACTOR TO VERIFY EX. UTILITY LOCATIONS PRIOR TO ANY CONSTRUCTION. IN THE EVENT OF UTILITY CONFLICTS, CONTRACTOR SHALL NOTIFY UTILITY TO RELOCATE TO AVOID CONFLICTS.
3. CONTRACTOR TO PROTECT ANY EXISTING STORM SEWER AND STRUCTURES AND/OR FIELD TILE ENCOUNTERED DURING CONSTRUCTION. IF ENCOUNTERED AND DISTURBED, CONTRACTOR TO REPLACE TO A CONDITION EQUAL TO OR BETTER.
4. DAMAGE TO SIGNS TO BE CONTRACTOR RESPONSIBILITY. REMOVAL AND REPLACEMENT OF SIGNS TO BE CONSIDERED INCIDENTAL TO PROJECT.
5. CONTRACTOR TO FIELD VERIFY LOCATION AND DEPTH OF EXISTING WATER MAIN PRIOR TO CONSTRUCTION ON LINE 'A'. MAINTAIN MINIMUM REQUIRED SEPARATION DURING INSTALLATION OF LINE 'A'.
6. CONTRACTOR TO PROTECT EXISTING HEADWALLS DURING CONSTRUCTION. ANY HEADWALLS DISTURBED DURING CONSTRUCTING ACTIVITIES WILL NEED TO BE REMOVED AND REPLACED IN KIND.
7. CONTRACTOR TO PROTECT ALL UTILITY/LIGHT POLES AND OVERHEAD LINES DURING CONSTRUCTION. COORDINATE WITH ELECTRIC UTILITY SHOULD POLES REQUIRE TEMPORARY SUPPORT.
8. REMOVE TREES/BUSHES AS NEED FOR CONSTRUCTION. SEE RESTORATION SHEETS FOR REPLACEMENT OF TREES/BUSHES AFTER CONSTRUCTION.
9. CONTRACTOR TO REPLACE ASPHALT PATHS AND/OR CONCRETE SIDE WALKS AS NEEDED FOR CONSTRUCTION (SEE RESTORATION SHEETS).
10. CONTRACTOR TO USE BOLT DOWN CASTING AND LID IN FLOODWAY, SEE MD SHEETS FOR DETAIL.

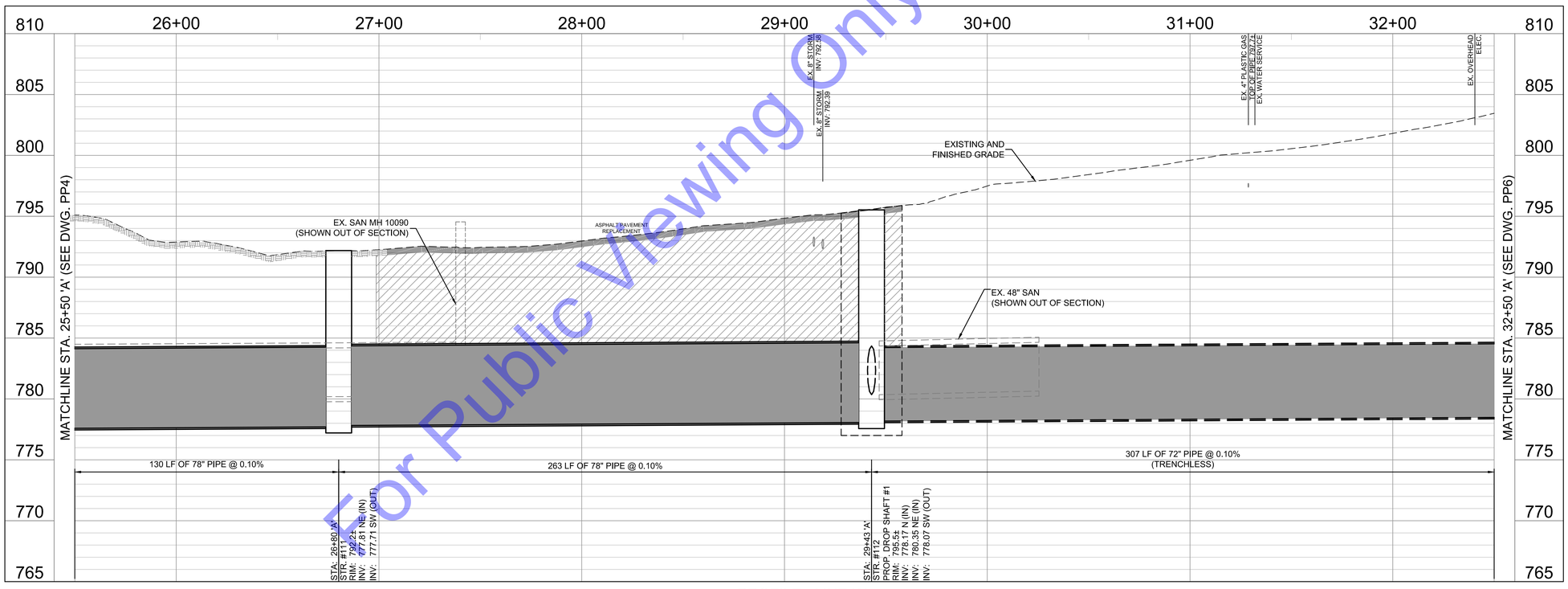

PROFILE - LINE 'A'
HORIZONTAL SCALE: 1"=30'-0"
VERTICAL SCALE: 1"=5'-0"

MANDATORY ALTERNATE

For Public Viewing Only-Not For Downloading

COMMONWEALTH ENGINEERS, INC.
A wealth of resources to master a common goal.
https://commonwealthengineers.com/

BRIAN KREED WILSON
REGISTERED
No. PE11900866
STATE OF INDIANA
PROFESSIONAL ENGINEER
Brian Wilson 8/15/2025
Signature Date

CITY OF KOKOMO, INDIANA
HOWARD COUNTY

NORTH SIDE INTERCEPTOR
IMPROVEMENTS PROJECT

© 2025 BY COMMONWEALTH ENGINEERS, INC. ALL RIGHTS RESERVED. REPRODUCTION BY ANY METHOD IN WHOLE OR IN PART WITHOUT PERMISSION IS PROHIBITED

Know what's below. Call before you dig.
1-800-382-5544 (ITS THE LAW)
Know what's below. 811 before you dig.

No.	Submittal / Revision	By	Date

Designed By:	Drawn By:	Checked By:
BW	BW/CH/EK	JH
Issue Date:	Project No:	Scale:
8/2025	S21082	AS SHOWN

MANDATORY ALTERNATE - SANITARY SEWER PLAN & PROFILE - LINE 'A' - STATION 25+50-32+50

Drawing No:
PP5A
Sheet: 33 OF 137

File: Z:\SHARED\IN CLIENTS A-L\KOKOMO\S21082 NORTH SIDE INTERCEPTOR DESIGN\06 CAD\A CURRENT FILES\1 DRAWINGS\05 - S21082 - PLAN AND PROFILE-ALT.DWG
Saved: 8/7/2025 3:06:17 PM Plotted: 8/11/2025 8:23:03 AM Current User: Bryce Persinger LastSavedBy: bwaterman

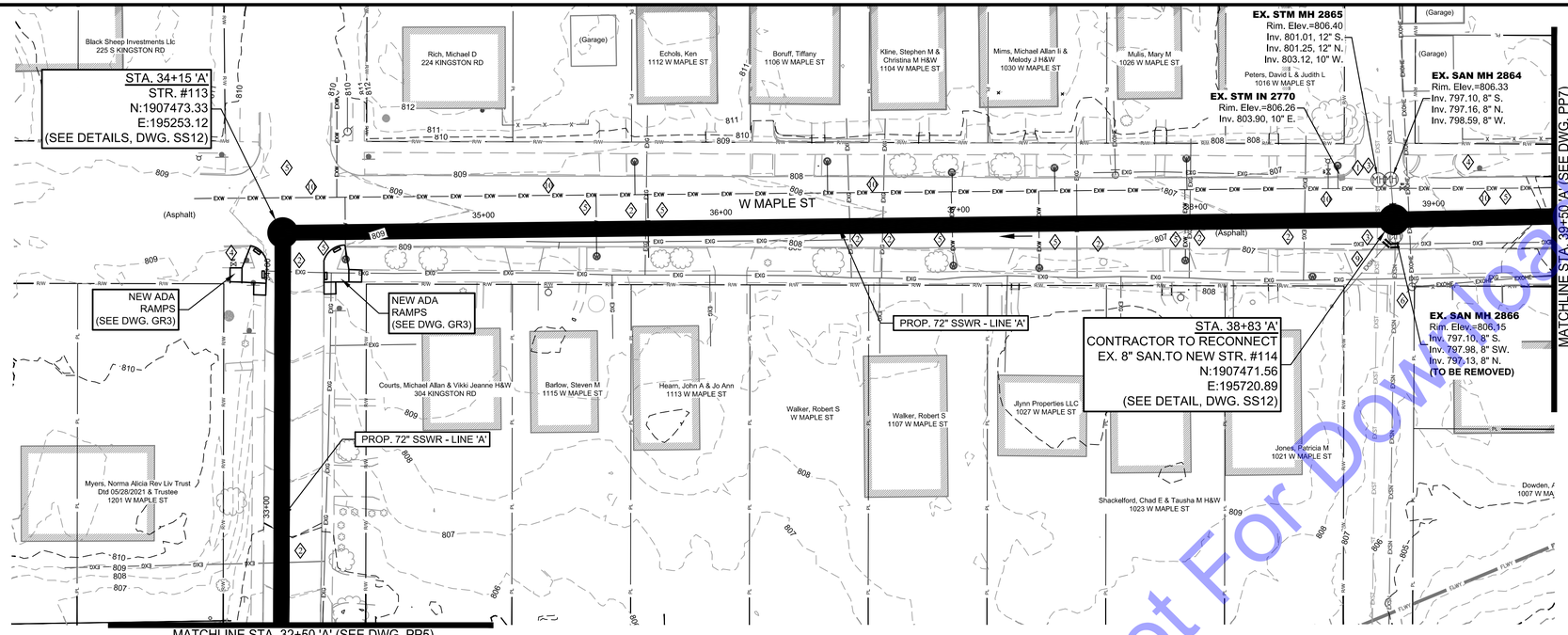

PLAN VIEW

SCALE: 1"=30'-0"

SCALE: 1"=30'

30' 0 30'

NOTE:
THE EXISTING AND PROPOSED PROFILE GRADES ARE BASED ON THE ELEVATIONS AT THE CENTERLINE OF THE PROPOSED SANITARY SEWER.

CODED NOTES

1. SEE EC DRAWINGS FOR EROSION CONTROL MEASURES.
2. CONTRACTOR TO VERIFY EX. UTILITY LOCATIONS PRIOR TO ANY CONSTRUCTION. IN THE EVENT OF UTILITY CONFLICTS, CONTRACTOR SHALL NOTIFY UTILITY TO RELOCATE TO AVOID CONFLICTS.
3. CONTRACTOR TO PROTECT ANY EXISTING STORM SEWER AND STRUCTURES AND/OR FIELD TILE ENCOUNTERED DURING CONSTRUCTION. IF ENCOUNTERED AND DISTURBED, CONTRACTOR TO REPLACE TO A CONDITION EQUAL TO OR BETTER.
4. DAMAGE TO SIGNS TO BE CONTRACTOR RESPONSIBILITY. REMOVAL AND REPLACEMENT OF SIGNS TO BE CONSIDERED INCIDENTAL TO PROJECT.
5. CONTRACTOR TO FIELD VERIFY LOCATION AND DEPTH OF EXISTING WATER MAIN PRIOR TO CONSTRUCTION ON LINE 'A'. MAINTAIN MINIMUM REQUIRED SEPARATION DURING INSTALLATION OF LINE 'A'.
6. CONTRACTOR TO PROTECT ALL UTILITY/LIGHT POLES AND OVERHEAD LINES DURING CONSTRUCTION. COORDINATE WITH ELECTRIC UTILITY SHOULD POLES REQUIRE TEMPORARY SUPPORT.
7. REMOVE TREES/BUSHES AS NEED FOR CONSTRUCTION. SEE RESTORATION SHEETS FOR REPLACEMENT OF TREES/BUSHES AFTER CONSTRUCTION.
8. CONTRACTOR TO REPLACE ASPHALT PATHS AND/OR CONCRETE SIDE WALKS AS NEEDED FOR CONSTRUCTION (SEE RESTORATION SHEETS).
9. CONTRACTOR TO FIELD VERIFY IF EXISTING 8" SANITARY FROM THE SW IS A SEWER LATERAL AND TO RECONNECT TO THE EXISTING 8" SANITARY TO THE SOUTH OF NEW STR. #114.
10. CONTRACTOR SHALL SUPPORT I&W WATER MAIN DURING CONSTRUCTION.

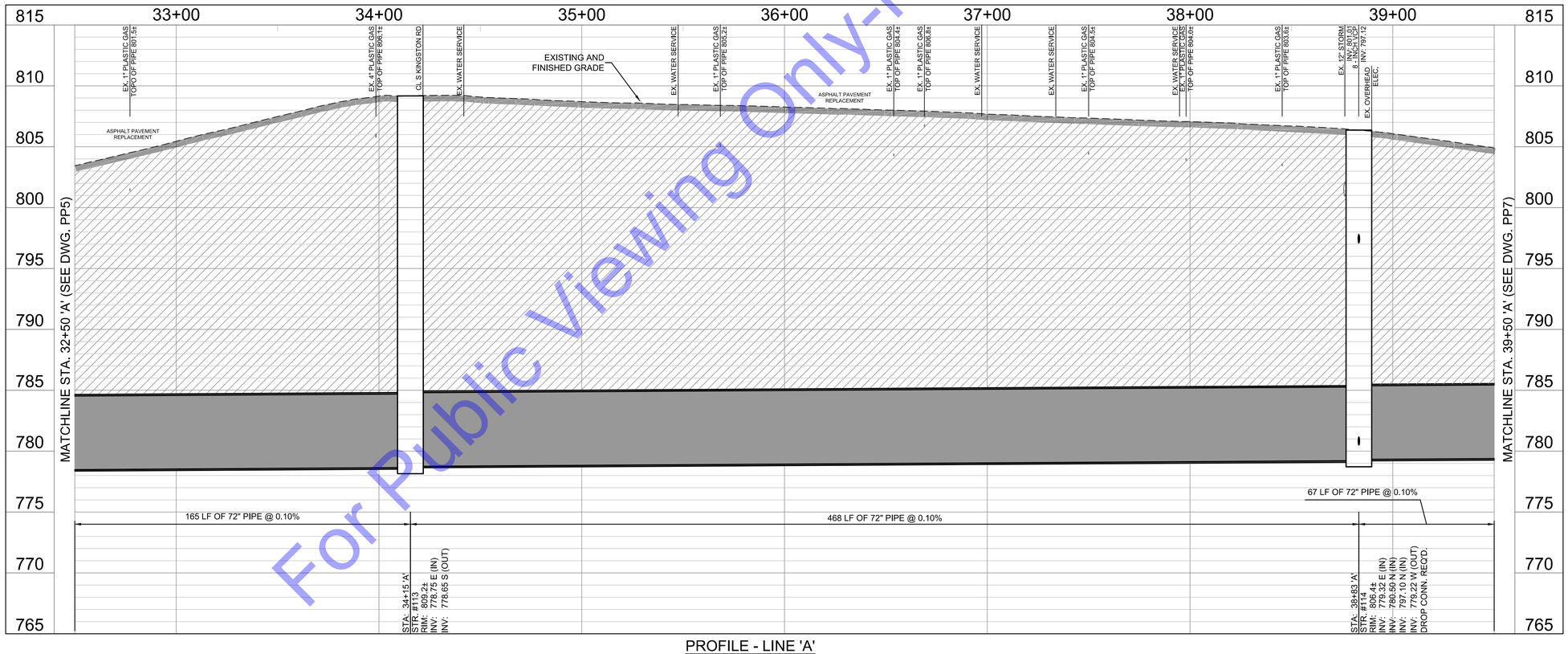

PROFILE - LINE 'A'

HORIZONTAL SCALE: 1"=30'-0"
VERTICAL SCALE: 1"=5'-0"

For Public Viewing Only-Not For Downloading

COMMONWEALTH ENGINEERS, INC.
A wealth of resources to master a common goal.
https://commonwealthengineers.com/

BRIAN KREED WILSON
REGISTERED
No. PE11900866
STATE OF INDIANA
PROFESSIONAL ENGINEER
Brian Wilson 8/15/2025
Signature Date

CITY OF KOKOMO, INDIANA
HOWARD COUNTY

NORTH SIDE INTERCEPTOR
IMPROVEMENTS PROJECT

© 2025 BY COMMONWEALTH ENGINEERS, INC. ALL RIGHTS RESERVED. REPRODUCTION BY ANY METHOD, IN WHOLE OR IN PART WITHOUT PERMISSION IS PROHIBITED

Indiana 811 Know what's below. Call before you dig.
Know what's below. 811 before you dig.
1-800-382-5544
(ITS THE LAW)

No.	Submittal / Revision	By	Date

Designed By:	Drawn By:	Checked By:
BW	BW/CH/EK	JH
Issue Date:	Project No:	Scale:
8/2025	S21082	AS SHOWN

SANITARY SEWER PLAN & PROFILE - LINE 'A' - STATION 32+50-39+50

Drawing No:
PP6
Sheet: 34 OF 137

File: Z:\SHARED\IN CLIENTS A-L\KOKOMO\S21082 NORTH SIDE INTERCEPTOR DESIGN\06 CAD\A CURRENT FILES\1 DRAWINGS\05 - S21082 - PLAN AND PROFILE.DWG
Saved: 8/8/2025 1:14:30 PM Plotted: 8/11/2025 8:24:09 AM Current User: Bryce Persinger LastSavedBy: bpersinger

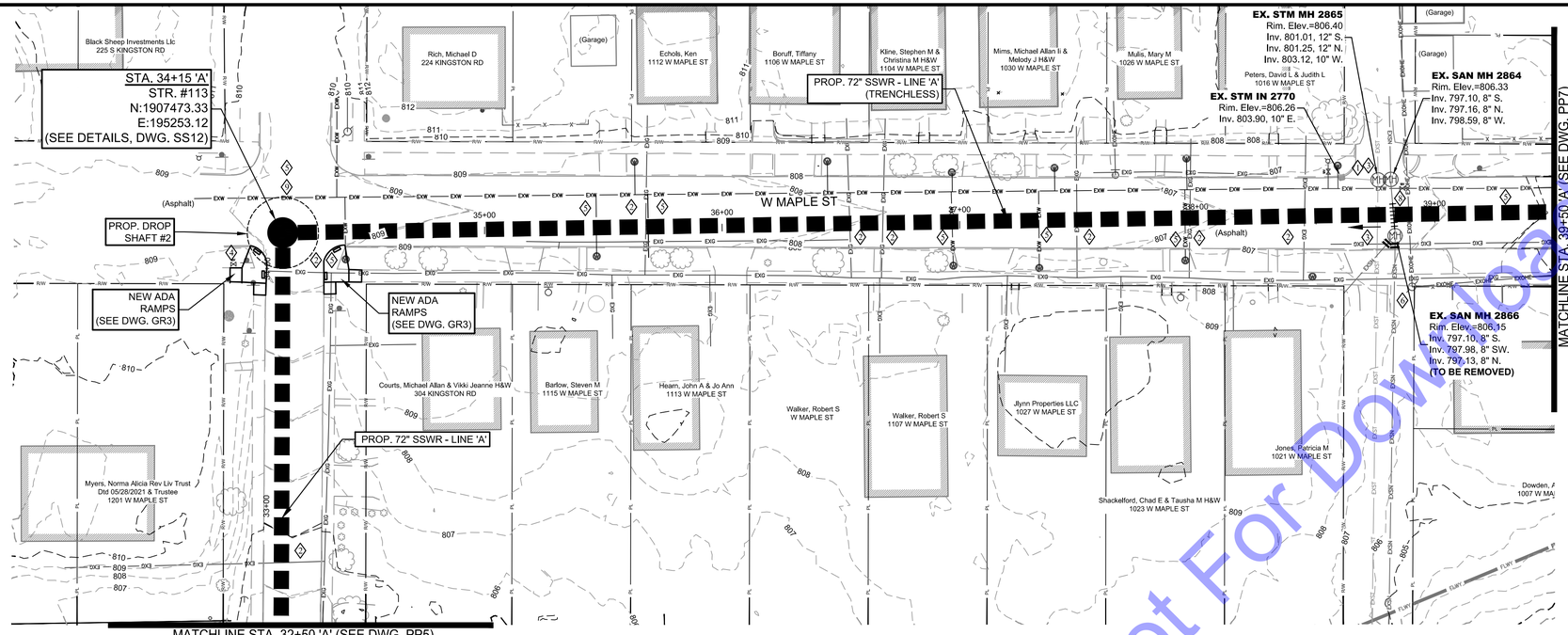

PLAN VIEW
SCALE: 1"=30'-0"

SCALE: 1"=30'
30' 0 30'

NOTE:
THE EXISTING AND PROPOSED PROFILE GRADES ARE BASED ON THE ELEVATIONS AT THE CENTERLINE OF THE PROPOSED SANITARY SEWER.

CODED NOTES

1. SEE EC DRAWINGS FOR EROSION CONTROL MEASURES.
2. CONTRACTOR TO VERIFY EX. UTILITY LOCATIONS PRIOR TO ANY CONSTRUCTION. IN THE EVENT OF UTILITY CONFLICTS, CONTRACTOR SHALL NOTIFY UTILITY TO RELOCATE TO AVOID CONFLICTS.
3. CONTRACTOR TO PROTECT ANY EXISTING STORM SEWER AND STRUCTURES AND/OR FIELD TILE ENCOUNTERED DURING CONSTRUCTION. IF ENCOUNTERED AND DISTURBED, CONTRACTOR TO REPLACE TO A CONDITION EQUAL TO OR BETTER.
4. DAMAGE TO SIGNS TO BE CONTRACTOR RESPONSIBILITY. REMOVAL AND REPLACEMENT OF SIGNS TO BE CONSIDERED INCIDENTAL TO PROJECT.
5. CONTRACTOR TO FIELD VERIFY LOCATION AND DEPTH OF EXISTING WATER MAIN PRIOR TO CONSTRUCTION ON LINE 'A'. MAINTAIN MINIMUM REQUIRED SEPARATION DURING INSTALLATION OF LINE 'A'.
6. CONTRACTOR TO PROTECT ALL UTILITY/LIGHT POLES AND OVERHEAD LINES DURING CONSTRUCTION. COORDINATE WITH ELECTRIC UTILITY SHOULD POLES REQUIRE TEMPORARY SUPPORT.
7. CONTRACTOR TO REPLACE ASPHALT PATHS AND/OR CONCRETE SIDE WALKS AS NEEDED FOR CONSTRUCTION (SEE RESTORATION SHEETS).
8. IF INSTALLED BY TRENCHLESS METHODS, EXISTING 8" SANITARY TO REMAIN IN SERVICE.
9. CONTRACTOR SHALL SUPPORT IAW WATER MAIN DURING CONSTRUCTION.

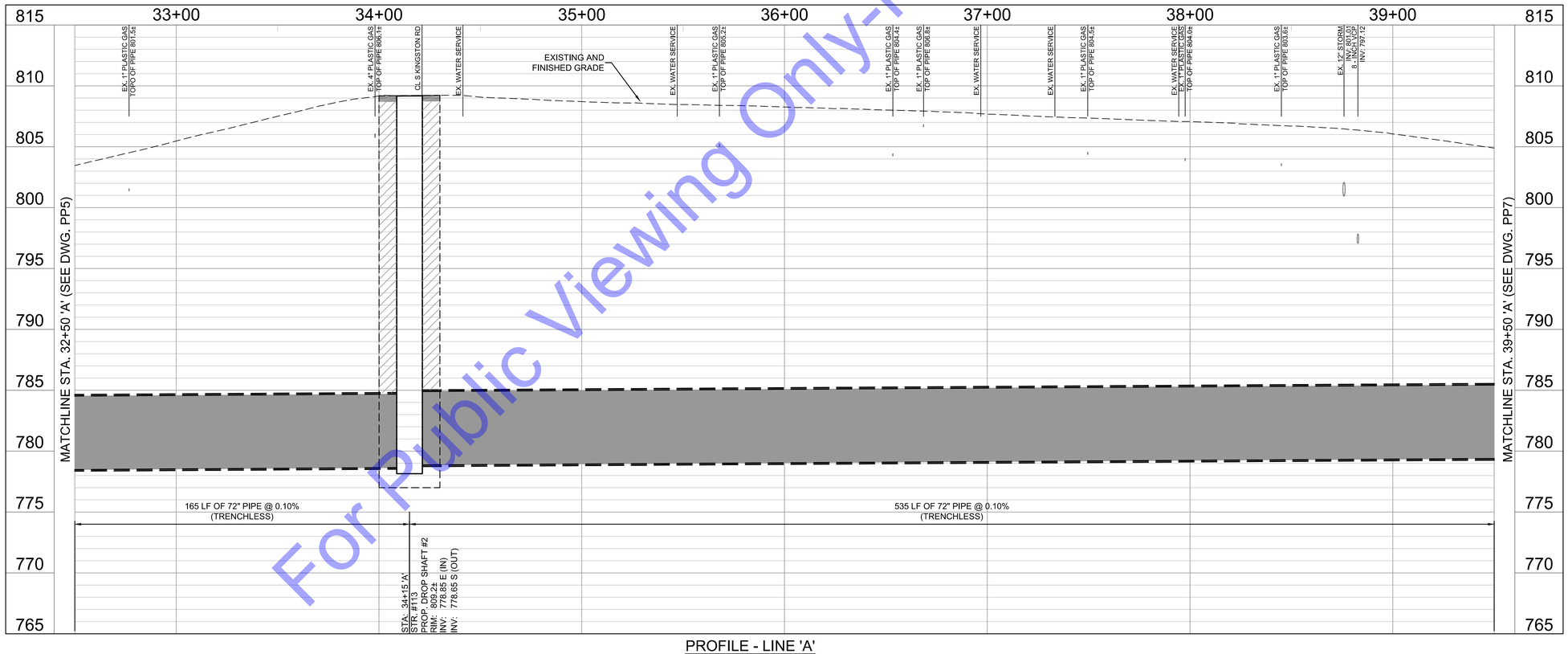

PROFILE - LINE 'A'
HORIZONTAL SCALE: 1"=30'-0"
VERTICAL SCALE: 1"=5'-0"

MANDATORY ALTERNATE

For Public Viewing Only-Not For Downloading

COMMONWEALTH ENGINEERS, INC.
A wealth of resources to master a common goal.
https://commonwealthengineers.com/

BRIAN KREED WILSON
REGISTERED
No. PE11900866
STATE OF INDIANA
PROFESSIONAL ENGINEER
Brian Wilson 8/15/2025
Signature Date

CITY OF KOKOMO, INDIANA
HOWARD COUNTY

NORTH SIDE INTERCEPTOR IMPROVEMENTS PROJECT

© 2025 BY COMMONWEALTH ENGINEERS, INC. ALL RIGHTS RESERVED. REPRODUCTION BY ANY METHOD IN WHOLE OR IN PART WITHOUT PERMISSION IS PROHIBITED

Indiana 811 Know what's below. Call before you dig.
Know what's below. 811 before you dig.
1-800-382-5544 (ITS THE LAW)

No.	Submittal / Revision	By	Date

Designed By:	Drawn By:	Checked By:
BW	BW/CH/EK	JH
Issue Date: 8/2025	Project No: S21082	Scale: AS SHOWN

MANDATORY ALTERNATE - SANITARY SEWER PLAN & PROFILE - LINE 'A' - STATION 32+50-39+50

Drawing No:
PP6A
Sheet: 35 OF 137

File: Z:\SHARED\IN CLIENTS A-L\KOKOMO\S21082 NORTH SIDE INTERCEPTOR DESIGN\06 CAD\A CURRENT FILES\1 DRAWINGS\05 - S21082 - PLAN AND PROFILE-ALT.DWG
Saved: 8/12/2025 5:00:52 PM Plotted: 8/13/2025 10:43:41 AM Current User: Brian Waterman LastSavedBy: bwaterman

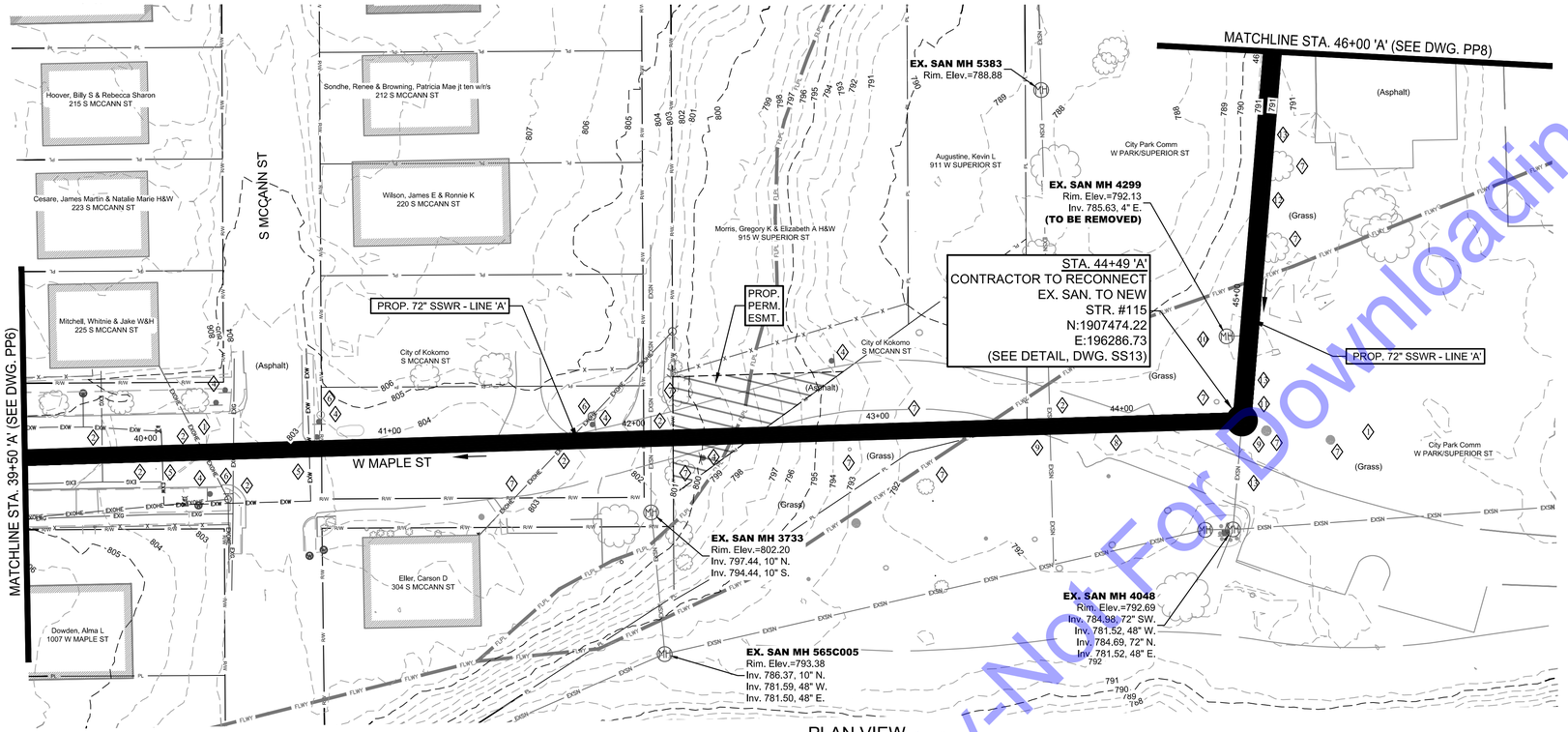

PLAN VIEW
SCALE: 1"=30'-0"

NOTE:
THE EXISTING AND PROPOSED PROFILE GRADES ARE BASED ON THE ELEVATIONS AT THE CENTERLINE OF THE PROPOSED SANITARY SEWER.

SCALE: 1"=30'
30' 0 30'

CODED NOTES

1. SEE EC DRAWINGS FOR EROSION CONTROL MEASURES.
2. CONTRACTOR TO VERIFY EX. UTILITY LOCATIONS PRIOR TO ANY CONSTRUCTION. IN THE EVENT OF UTILITY CONFLICTS, CONTRACTOR SHALL NOTIFY UTILITY TO RELOCATE TO AVOID CONFLICTS.
3. CONTRACTOR TO PROTECT ANY EXISTING STORM SEWER AND STRUCTURES AND/OR FIELD TILE ENCOUNTERED DURING CONSTRUCTION. IF ENCOUNTERED AND DISTURBED, CONTRACTOR TO REPLACE TO A CONDITION EQUAL TO OR BETTER.
4. DAMAGE TO SIGNS TO BE CONTRACTOR RESPONSIBILITY. REMOVAL AND REPLACEMENT OF SIGNS TO BE CONSIDERED INCIDENTAL TO PROJECT.
5. CONTRACTOR TO FIELD VERIFY LOCATION AND DEPTH OF EXISTING WATER MAIN PRIOR TO CONSTRUCTION ON LINE 'A'. MAINTAIN MINIMUM REQUIRED SEPARATION DURING INSTALLATION OF LINE 'A'.
6. CONTRACTOR TO PROTECT ALL UTILITY/LIGHT POLES AND OVERHEAD LINES DURING CONSTRUCTION. COORDINATE WITH ELECTRIC UTILITY SHOULD POLES REQUIRE TEMPORARY SUPPORT.
7. REMOVE TREES/BUSHES AS NEED FOR CONSTRUCTION. SEE RESTORATION SHEETS FOR REPLACEMENT OF TREES/BUSHES AFTER CONSTRUCTION.
8. CONTRACTOR TO REPLACE ASPHALT PATHS AND/OR CONCRETE SIDE WALKS AS NEEDED FOR CONSTRUCTION (SEE RESTORATION SHEETS).
9. EARLY ACTION:
CONTRACTOR SHALL CONFIRM THE ELEVATION AND DEPTH OF THE EXISTING COMBINED SEWER PRIOR TO CONSTRUCTION AND PROVIDE TO THE ENGINEER/OWNER.
10. EARLY ACTION:
CONTRACTOR SHALL CONFIRM IN EXISTING SAN MN 4299 IS ACTIVE. PROVIDE INFORMATION TO ENGINEER/OWNER PRIOR TO CONSTRUCTION. IF NOT ACTIVE, REMOVE STRUCTURE AND DISPOSE OF LAWFULLY DURING CONSTRUCTION.
11. CONTRACTOR TO USE BOLT DOWN CASTING AND LID IN FLOODWAY. SEE MD SHEETS FOR DETAIL.
12. BETWEEN STA. 44+49 TO 48+23, CONTRACTOR SHALL PROVIDE MACWRAP OR EQUAL AT ALL JOINTS - SEE SPECIFICATIONS FOR DETAILS.
13. EARLY ACTION:
CONTRACTOR SHALL CONFIRM THE SIZE, SHAPE, AND DEPTH OF EXISTING COMBINED SEWER PRIOR TO CONSTRUCTION. PROVIDE INFORMATION TO THE ENGINEER/OWNER.

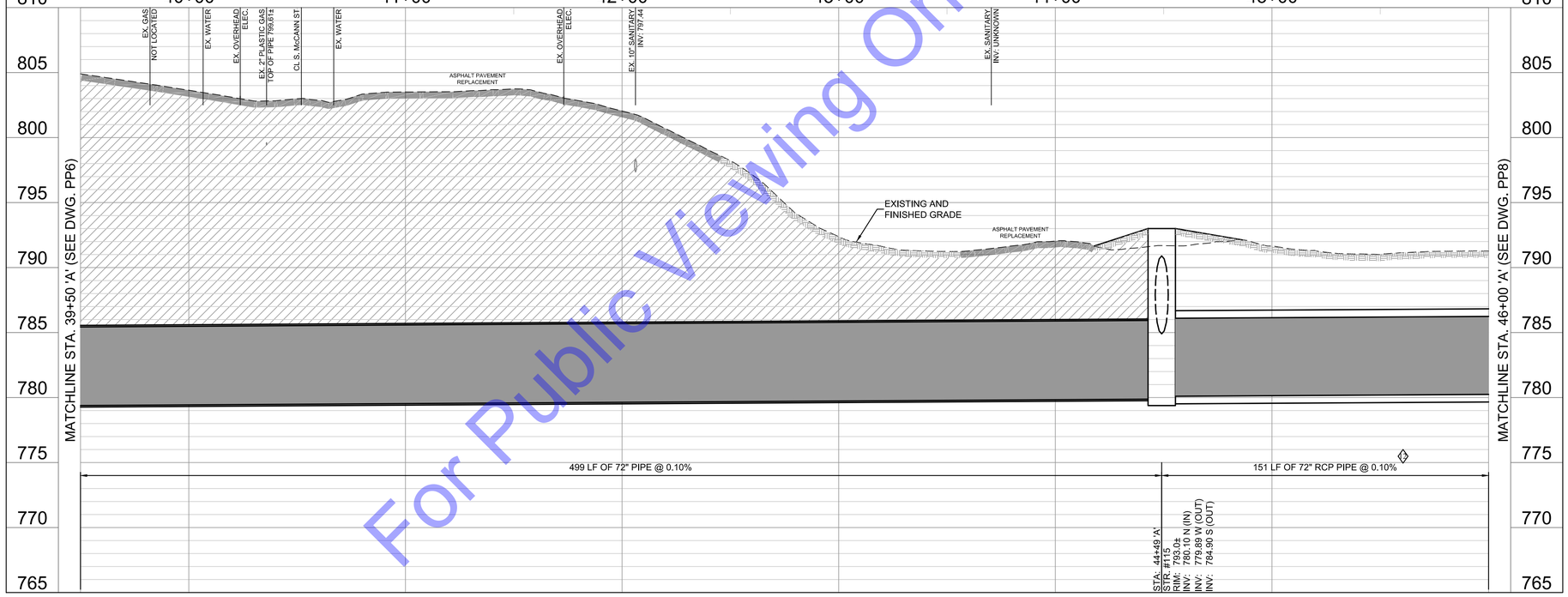

PROFILE - LINE 'A'
HORIZONTAL SCALE: 1"=30'-0"
VERTICAL SCALE: 1"=5'-0"

For Public Viewing Only-Not For Downloading

COMMONWEALTH ENGINEERS, INC.
A wealth of resources to master a common goal.
https://commonwealthengineers.com/

BRIAN KRED WILSON
REGISTERED
No. PE11900866
STATE OF INDIANA
PROFESSIONAL ENGINEER
Brian Wilson 8/15/2025
Signature Date

CITY OF KOKOMO, INDIANA
HOWARD COUNTY

NORTH SIDE INTERCEPTOR
IMPROVEMENTS PROJECT

© 2025 BY COMMONWEALTH ENGINEERS, INC. ALL RIGHTS RESERVED. REPRODUCTION BY ANY METHOD, IN WHOLE OR IN PART WITHOUT PERMISSION IS PROHIBITED

Indiana 811 Know what's below. Call before you dig.
Know what's below. 811 before you dig.
1-800-382-5544 (ITS THE LAW)

No.	Submittal / Revision	By	Date

Designed By:	Drawn By:	Checked By:
BW	BW/CH/EK	JH
Issue Date: 8/2025	Project No: S21082	Scale: AS SHOWN

SANITARY SEWER PLAN & PROFILE - LINE 'A' - STATION 39+50-46+00

Drawing No:
PP7
Sheet: 36 OF 137

File: Z:\SHARED\IN CLIENTS A-L\KOKOMO\S21082 NORTH SIDE INTERCEPTOR DESIGN\06 CAD\A CURRENT FILES\1 DRAWINGS\05 - S21082 - PLAN AND PROFILE.DWG
Saved: 8/15/2025 1:42:10 PM Plotted: 8/18/2025 8:28:06 AM Current User: Brian Waterman LastSavedBy: bwaterman

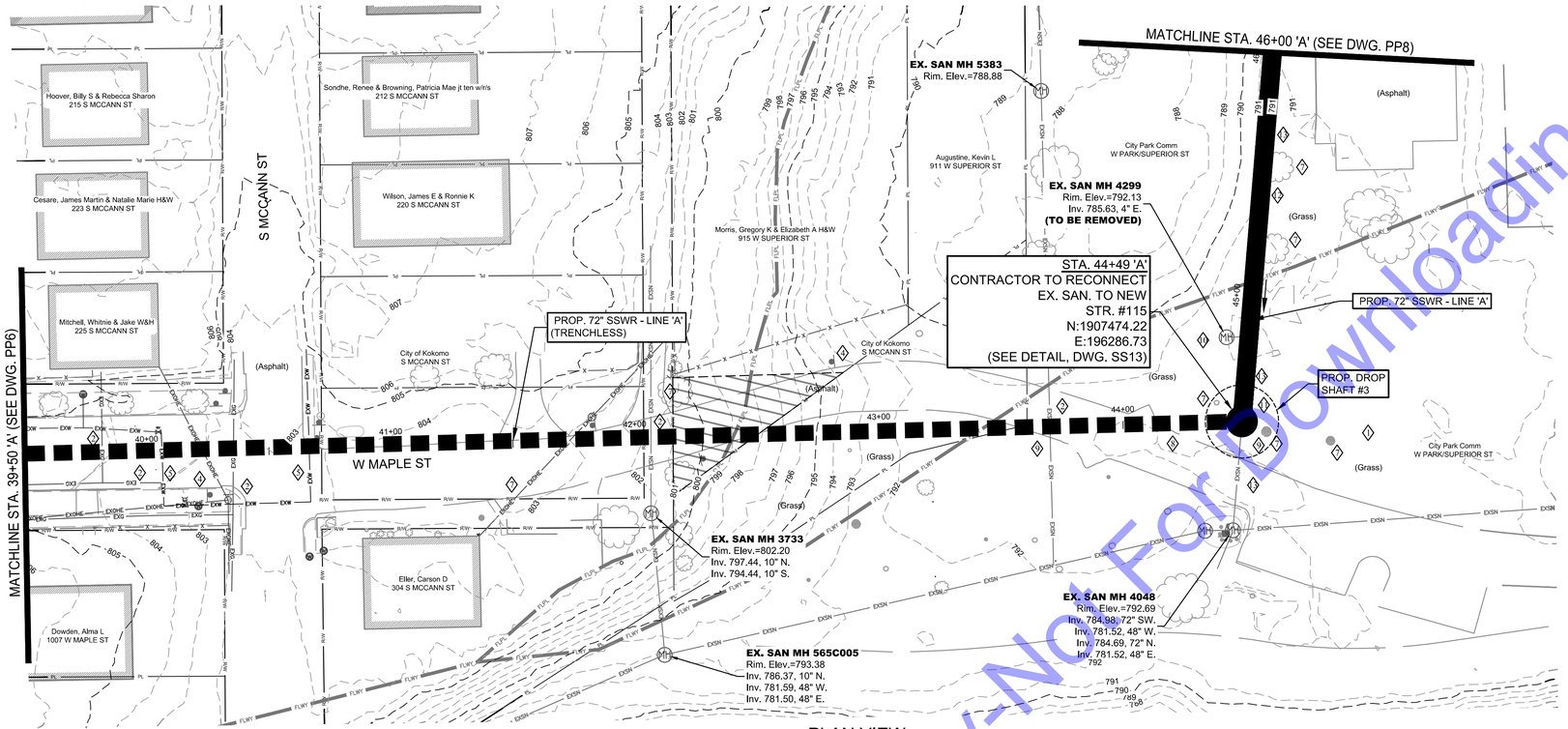

PLAN VIEW
SCALE: 1"=30'-0"

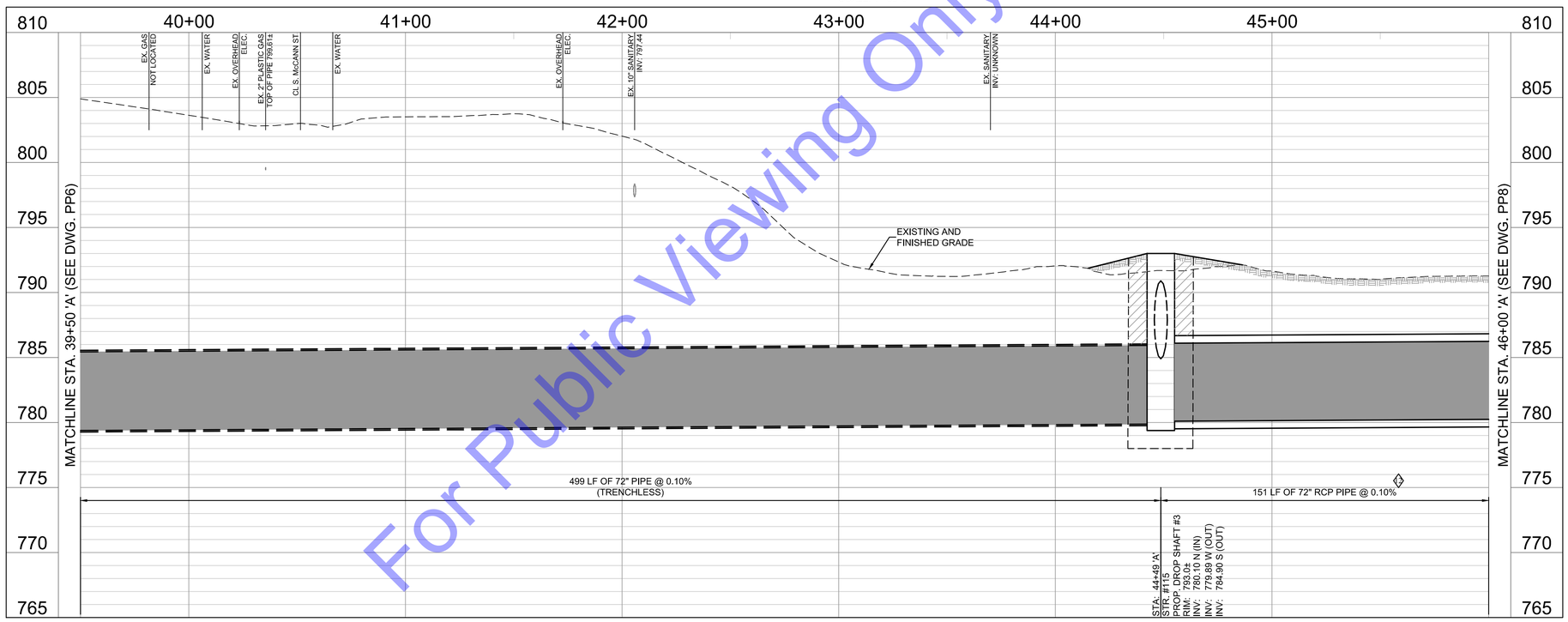

PROFILE - LINE 'A'
HORIZONTAL SCALE: 1"=30'-0"
VERTICAL SCALE: 1"=5'-0"

NOTE:
THE EXISTING AND PROPOSED PROFILE GRADES ARE BASED ON THE ELEVATIONS AT THE CENTERLINE OF THE PROPOSED SANITARY SEWER.

SCALE: 1"=30'
30' 0 30'

CODED NOTES

1. SEE EC DRAWINGS FOR EROSION CONTROL MEASURES.
2. CONTRACTOR TO VERIFY EX. UTILITY LOCATIONS PRIOR TO ANY CONSTRUCTION. IN THE EVENT OF UTILITY CONFLICTS, CONTRACTOR SHALL NOTIFY UTILITY TO RELOCATE TO AVOID CONFLICTS.
3. CONTRACTOR TO PROTECT ANY EXISTING STORM SEWER AND STRUCTURES AND/OR FIELD TILE ENCOUNTERED DURING CONSTRUCTION. IF ENCOUNTERED AND DISTURBED, CONTRACTOR TO REPLACE TO A CONDITION EQUAL TO OR BETTER.
4. DAMAGE TO SIGNS TO BE CONTRACTOR RESPONSIBILITY. REMOVAL AND REPLACEMENT OF SIGNS TO BE CONSIDERED INCIDENTAL TO PROJECT.
5. CONTRACTOR TO FIELD VERIFY LOCATION AND DEPTH OF EXISTING WATER MAIN PRIOR TO CONSTRUCTION ON LINE 'A'. MAINTAIN MINIMUM REQUIRED SEPARATION DURING INSTALLATION OF LINE 'A'.
6. CONTRACTOR TO PROTECT ALL UTILITY/LIGHT POLES AND OVERHEAD LINES DURING CONSTRUCTION. COORDINATE WITH ELECTRIC UTILITY SHOULD POLES REQUIRE TEMPORARY SUPPORT.
7. REMOVE TREES/BUSHES AS NEED FOR CONSTRUCTION. SEE RESTORATION SHEETS FOR REPLACEMENT OF TREES/BUSHES AFTER CONSTRUCTION.
8. CONTRACTOR TO REPLACE ASPHALT PATHS AND/OR CONCRETE SIDE WALKS AS NEEDED FOR CONSTRUCTION (SEE RESTORATION SHEETS).
9. EARLY ACTION:
CONTRACTOR SHALL CONFIRM THE ELEVATION AND DEPTH OF THE EXISTING COMBINED SEWER PRIOR TO CONSTRUCTION AND PROVIDE TO THE ENGINEER/OWNER.
10. EARLY ACTION:
CONTRACTOR SHALL CONFIRM IN EXISTING SAN MN 4299 IS ACTIVE, PROVIDE INFORMATION TO ENGINEER/OWNER PRIOR TO CONSTRUCTION. IF NOT ACTIVE, REMOVE STRUCTURE AND DISPOSE OF LAWFULLY DURING CONSTRUCTION.
11. CONTRACTOR TO USE BOLT DOWN CASTING AND LID IN FLOODWAY. SEE MD SHEETS FOR DETAIL.
12. BETWEEN STA. 44+49 TO 48+23, CONTRACTOR SHALL PROVIDE MACWRAP OR EQUAL AT ALL JOINTS - SEE SPECIFICATIONS FOR DETAILS.
13. EARLY ACTION:
CONTRACTOR SHALL CONFIRM THE SIZE, SHAPE, AND DEPTH OF EXISTING COMBINED SEWER PRIOR TO CONSTRUCTION. PROVIDE INFORMATION TO THE ENGINEER/OWNER.

For Public Viewing Only-Not For Downloading

MANDATORY ALTERNATE

COMMONWEALTH ENGINEERS, INC.
A wealth of resources to master a common goal.
https://commonwealthengineers.com/

BRIAN KREED WILSON
REGISTERED
No. PE11900866
STATE OF INDIANA
PROFESSIONAL ENGINEER
Brian Wilson 8/15/2025
Signature Date

CITY OF KOKOMO, INDIANA
HOWARD COUNTY

NORTH SIDE INTERCEPTOR IMPROVEMENTS PROJECT

© 2025 BY COMMONWEALTH ENGINEERS, INC. ALL RIGHTS RESERVED. REPRODUCTION BY ANY METHOD IN WHOLE OR IN PART WITHOUT PERMISSION IS PROHIBITED

Know what's below. Call before you dig.
1-800-382-5544 (IYS THE LAW)

No.	Submittal / Revision	By	Date

Designed By:	Drawn By:	Checked By:
BW	BW/CH/EK	JH
Issue Date:	Project No:	Scale:
8/2025	S21082	AS SHOWN

MANDATORY ALTERNATE - SANITARY SEWER PLAN & PROFILE - LINE 'A' - STATION 39+50-46+00

Drawing No:
PP7A
Sheet: 37 OF 137

File: Z:\SHARED\IN CLIENTS A-L\KOKOMO\S21082 NORTH SIDE INTERCEPTOR DESIGN\06 CAD\A CURRENT FILES\1 DRAWINGS\05 - S21082 - PLAN AND PROFILE-ALT.DWG
Saved: 8/15/2025 12:30:55 PM Plotted: 8/18/2025 8:29:34 AM Current User: Brian Waterman LastSavedBy: bwaterman

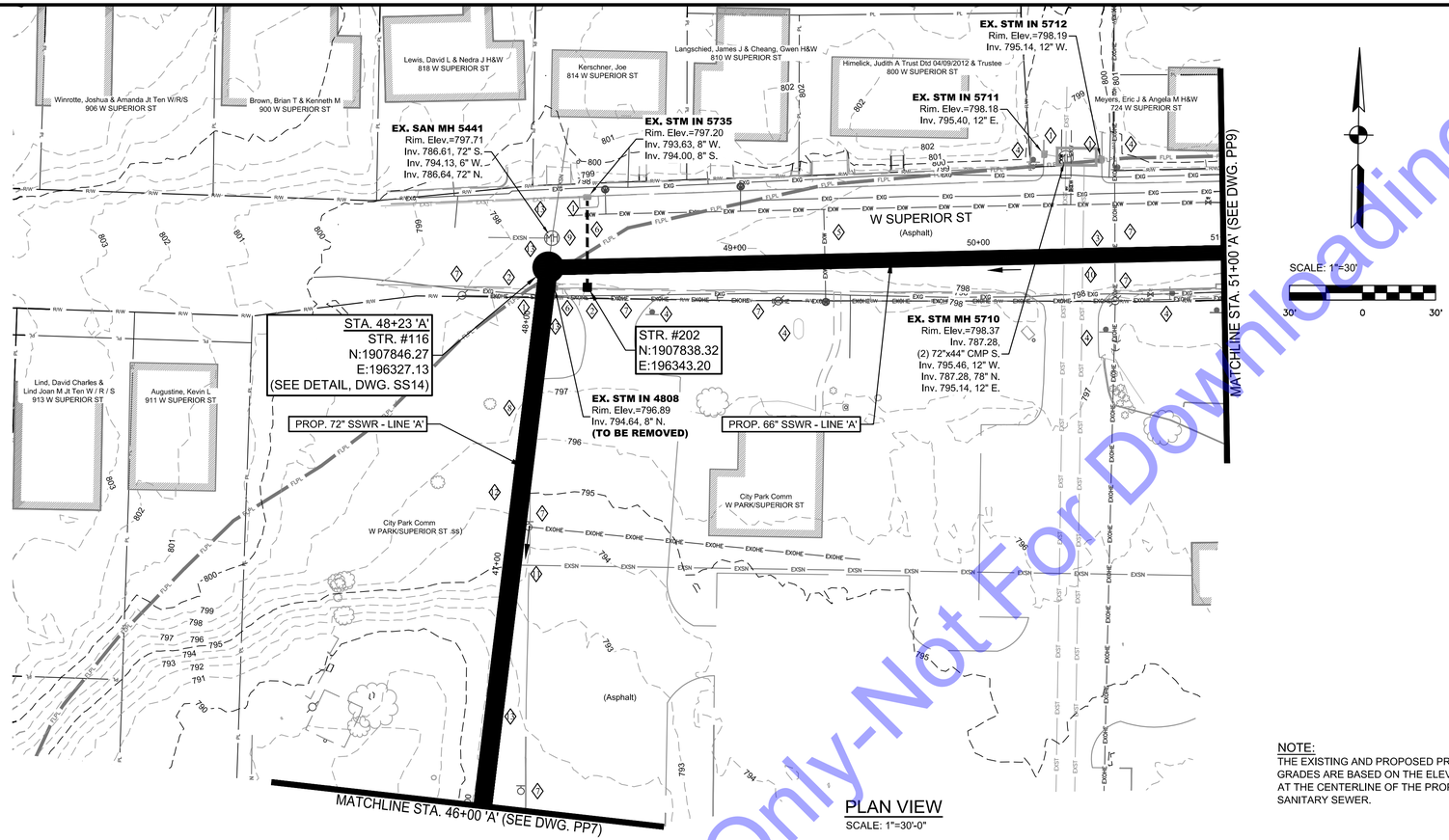

PLAN VIEW
SCALE: 1"=30'-0"

NOTE:
THE EXISTING AND PROPOSED PROFILE GRADES ARE BASED ON THE ELEVATIONS AT THE CENTERLINE OF THE PROPOSED SANITARY SEWER.

CODED NOTES

1. SEE EC DRAWINGS FOR EROSION CONTROL MEASURES.
2. CONTRACTOR TO VERIFY EX. UTILITY LOCATIONS PRIOR TO ANY CONSTRUCTION. IN THE EVENT OF UTILITY CONFLICTS, CONTRACTOR SHALL NOTIFY UTILITY TO RELOCATE TO AVOID CONFLICTS.
3. CONTRACTOR TO PROTECT ANY EXISTING STORM SEWER AND STRUCTURES AND/OR FIELD TILE ENCOUNTERED DURING CONSTRUCTION. IF ENCOUNTERED AND DISTURBED, CONTRACTOR TO REPLACE TO A CONDITION EQUAL TO OR BETTER.
4. DAMAGE TO SIGNS TO BE CONTRACTOR RESPONSIBILITY. REMOVAL AND REPLACEMENT OF SIGNS TO BE CONSIDERED INCIDENTAL TO PROJECT.
5. CONTRACTOR TO FIELD VERIFY LOCATION AND DEPTH OF EXISTING WATER MAIN PRIOR TO CONSTRUCTION ON LINE 'A'. MAINTAIN MINIMUM REQUIRED SEPARATION DURING INSTALLATION OF LINE 'A'.
6. CONTRACTOR TO REMOVE EX. STM IN 4808 AND REPLACE WITH NEW STM STR. # 202. CONTRACTOR TO CORE NEW INVERT 794.00 INTO EX. STM INLET 5735, CONNECT TO EX. STM IN 5735 WITH 37 LF OF 8" STORM AT 0.30%.
7. CONTRACTOR TO PROTECT ALL UTILITY/LIGHT POLES AND OVERHEAD LINES DURING CONSTRUCTION. COORDINATE WITH ELECTRIC UTILITY SHOULD POLES REQUIRE TEMPORARY SUPPORT.
8. REMOVE TREES/BUSHES AS NEED FOR CONSTRUCTION. SEE RESTORATION SHEETS FOR REPLACEMENT OF TREES/BUSHES AFTER CONSTRUCTION.
9. CONTRACTOR SHALL SUPPORT AND PROJECT EX. SAN MH 5441 AS NEEDED TO CONSTRUCT LINE 'A'.
10. EARLY ACTION: CONTRACTOR SHALL CONFIRM THE DEPTH, MATERIAL, THICKNESS AND ELEVATION OF THE EXISTING STORM SEWER DUAL PIPES PRIOR TO CONSTRUCTION AND PROVIDE TO ENGINEER/OWNER. CONTRACTOR WILL FLOWABLE FILL AROUND DUAL PIPES AND LINE 'A' AS NECESSARY.
11. CONTRACTOR TO RECONNECT EXISTING SANITARY SEWER LATERAL TO LINE 'A' WITHIN THE TRENCH.
12. BETWEEN STA. 44+49 TO 48+23, CONTRACTOR SHALL PROVIDE MACWRAP OR EQUAL AT ALL JOINTS - SEE SPECIFICATIONS FOR DETAILS.
13. EARLY ACTION: CONTRACTOR SHALL CONFIRM THE SIZE, SHAPE, AND DEPTH OF EXISTING COMBINED SEWER PRIOR TO CONSTRUCTION. PROVIDE INFORMATION TO THE ENGINEER/OWNER.

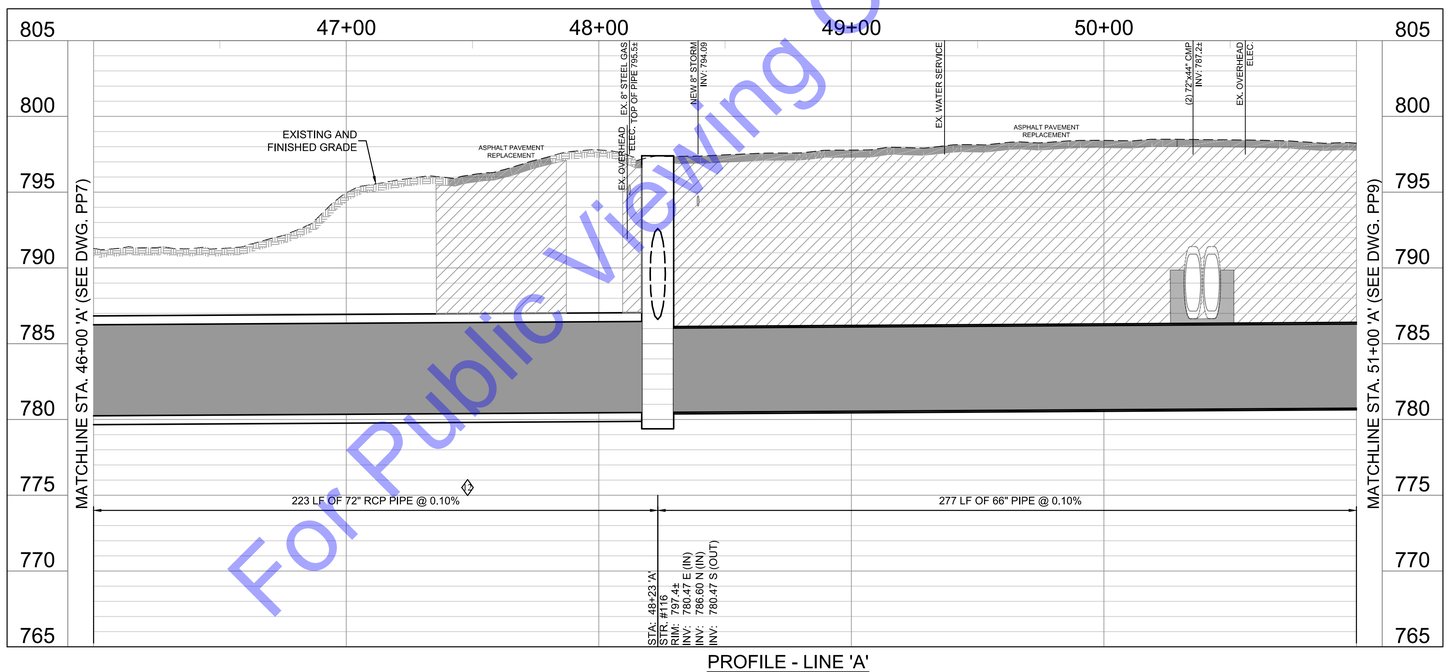

PROFILE - LINE 'A'
HORIZONTAL SCALE: 1"=30'-0"
VERTICAL SCALE: 1"=5'-0"

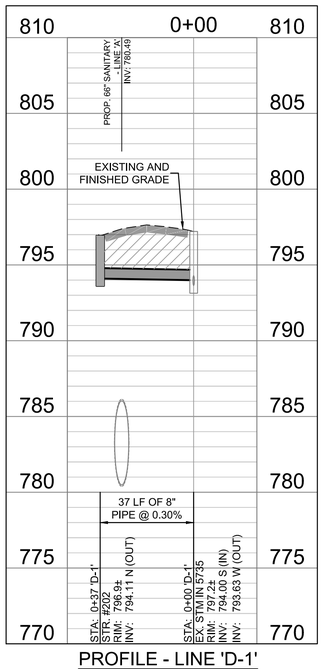

PROFILE - LINE 'D-1'
HORIZONTAL SCALE: 1"=30'-0"
VERTICAL SCALE: 1"=5'-0"

For Public Viewing Only-Not For Downloading

COMMONWEALTH ENGINEERS, INC.
A wealth of resources to master a common goal.
https://commonwealthengineers.com/

BRIAN KREED WILSON
REGISTERED
No. PE11900866
STATE OF INDIANA
PROFESSIONAL ENGINEER
Brian Wilson
Signature
8/15/2025
Date

CITY OF KOKOMO, INDIANA
HOWARD COUNTY

NORTH SIDE INTERCEPTOR
IMPROVEMENTS PROJECT

© 2025 BY COMMONWEALTH ENGINEERS, INC. ALL RIGHTS RESERVED. REPRODUCTION BY ANY METHOD IN WHOLE OR IN PART WITHOUT PERMISSION IS PROHIBITED

Indiana811
Know what's below. Call before you dig.
Know what's below. 811 before you dig.
1-800-382-5544
(ITS THE LAW)

No.	Submittal / Revision	By	Date

Designed By:	Drawn By:	Checked By:
BW	BW/CH/EK	JH
Issue Date:	Project No:	Scale:
8/2025	S21082	AS SHOWN

SANITARY SEWER PLAN & PROFILE - LINE 'A' - STATION 46+00-51+00; LINE 'D-1' - STATION 0+00-0+37

Drawing No:
PP8
Sheet: 38 OF 137

File: Z:\SHARED\IN CLIENTS A-L\KOKOMO\S21082 NORTH SIDE INTERCEPTOR DESIGN\06 CAD\A CURRENT FILES\1 DRAWINGS\05 - S21082 - PLAN AND PROFILE.DWG
Saved: 8/15/2025 1:42:10 PM Plotted: 8/18/2025 8:30:56 AM Current User: Brian Waterman LastSavedBy: bwaterman

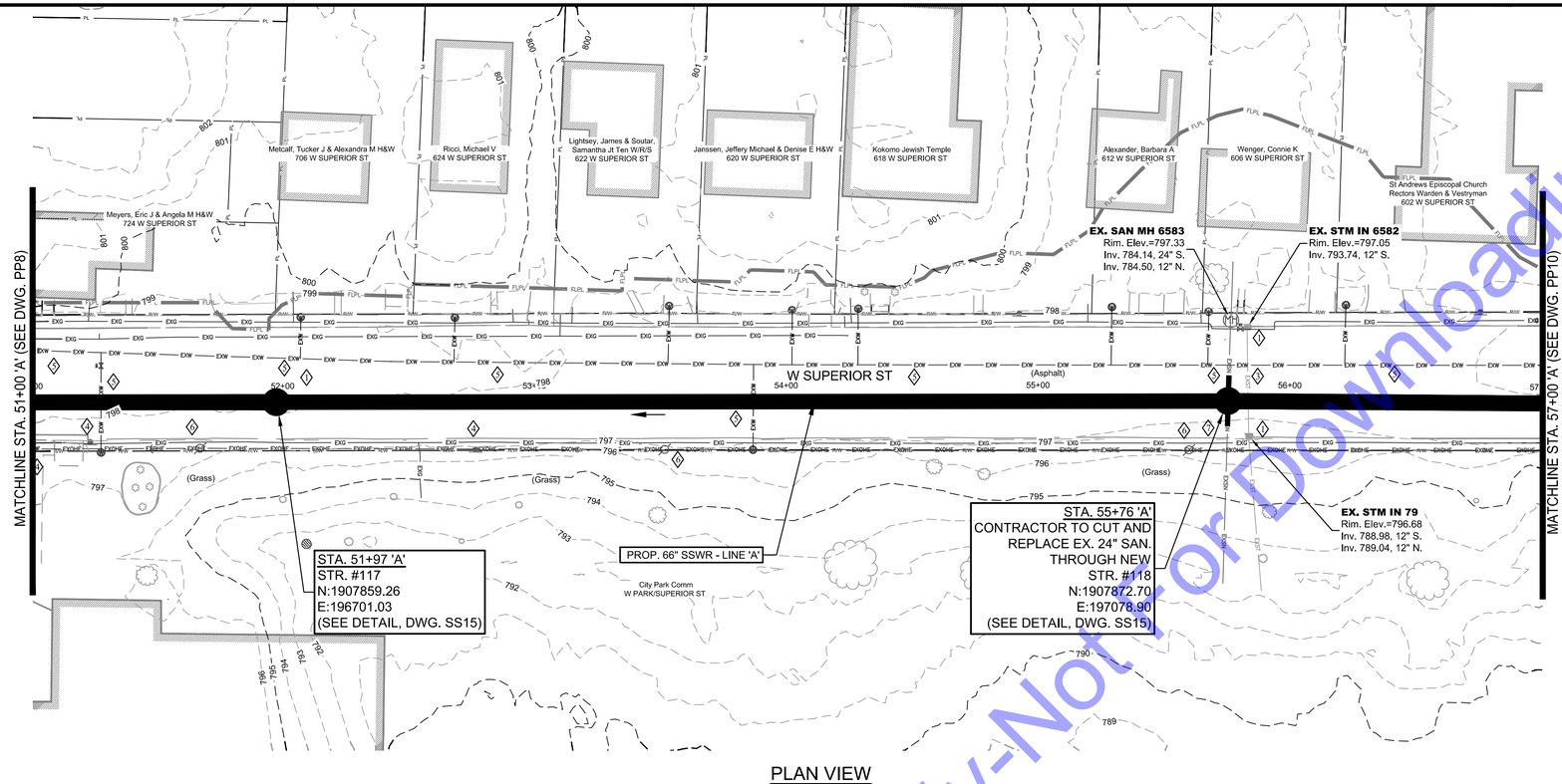

PLAN VIEW

SCALE: 1"=30'-0"

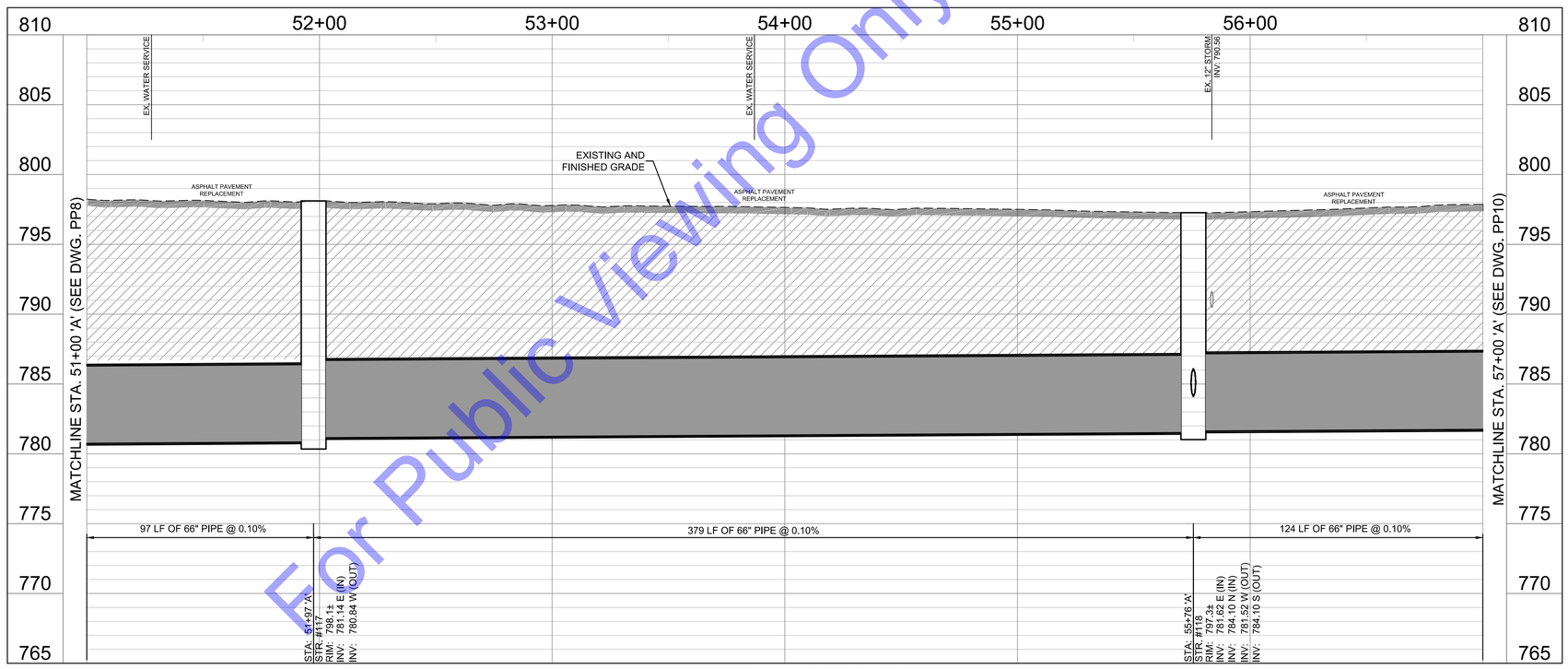

PROFILE - LINE 'A'

HORIZONTAL SCALE: 1"=30'-0"

VERTICAL SCALE: 1"=5'-0"

NOTE:
THE EXISTING AND PROPOSED PROFILE GRADES ARE BASED ON THE ELEVATIONS AT THE CENTERLINE OF THE PROPOSED SANITARY SEWER.

SCALE: 1"=30'

30' 0 30'

CODED NOTES

1. SEE EC DRAWINGS FOR EROSION CONTROL MEASURES.
2. CONTRACTOR TO VERIFY EX. UTILITY LOCATIONS PRIOR TO ANY CONSTRUCTION. IN THE EVENT OF UTILITY CONFLICTS, CONTRACTOR SHALL NOTIFY UTILITY TO RELOCATE TO AVOID CONFLICTS.
3. CONTRACTOR TO PROTECT ANY EXISTING STORM SEWER AND STRUCTURES AND/OR FIELD TILE ENCOUNTERED DURING CONSTRUCTION. IF ENCOUNTERED AND DISTURBED, CONTRACTOR TO REPLACE TO A CONDITION EQUAL TO OR BETTER.
4. DAMAGE TO SIGNS TO BE CONTRACTOR RESPONSIBILITY. REMOVAL AND REPLACEMENT OF SIGNS TO BE CONSIDERED INCIDENTAL TO PROJECT.
5. CONTRACTOR TO FIELD VERIFY LOCATION AND DEPTH OF EXISTING WATER MAIN PRIOR TO CONSTRUCTION ON LINE 'A'. MAINTAIN MINIMUM REQUIRED SEPARATION DURING INSTALLATION OF LINE 'A'.
6. CONTRACTOR TO PROTECT ALL UTILITY/LIGHT POLES AND OVERHEAD LINES DURING CONSTRUCTION. COORDINATE WITH ELECTRIC UTILITY SHOULD POLES REQUIRE TEMPORARY SUPPORT.
7. EARLY ACTION:
CONTRACTOR TO FIELD VERIFY LOCATION AND DEPTH OF EXISTING 24" SANITARY PRIOR TO CONSTRUCTION OF LINE 'A'. PROVIDE ENGINEER/OWNER THE INFORMATION VERIFIED PRIOR TO CONSTRUCTION.

COMMONWEALTH ENGINEERS, INC.
A wealth of resources to master a common goal.
https://commonwealthengineers.com/

BRIAN KREED WILSON
REGISTERED
No. PE11900866
STATE OF INDIANA
PROFESSIONAL ENGINEER

Brian Wilson 8/15/2025
Signature Date

CITY OF KOKOMO, INDIANA
HOWARD COUNTY

NORTH SIDE INTERCEPTOR
IMPROVEMENTS PROJECT

© 2025 BY COMMONWEALTH ENGINEERS, INC. ALL RIGHTS RESERVED. REPRODUCTION BY ANY METHOD IN WHOLE OR IN PART WITHOUT PERMISSION IS PROHIBITED

Indiana811 Know what's below. Call before you dig.
Know what's below. 811 before you dig.
1-800-382-5544 (ITS THE LAW)

No.	Submittal / Revision	By	Date

Designed By:	Drawn By:	Checked By:
BW	BW/CH/EK	JH
Issue Date:	Project No:	Scale:
8/2025	S21082	AS SHOWN

SANITARY SEWER PLAN & PROFILE - LINE 'A' - STATION 51+00-57+00

Drawing No:
PP9
Sheet: 39 OF 137

For Public Viewing Only-Not for Downloading

File: Z:\SHARED\IN CLIENTS A-L\KOKOMO\S21082 NORTH SIDE INTERCEPTOR DESIGN\06 CAD\A CURRENT FILES\1 DRAWINGS\05 - S21082 - PLAN AND PROFILE.DWG
Saved: 8/8/2025 1:14:30 PM Plotted: 8/11/2025 8:29:47 AM Current User: Bryce Persinger LastSavedBy: bpersinger

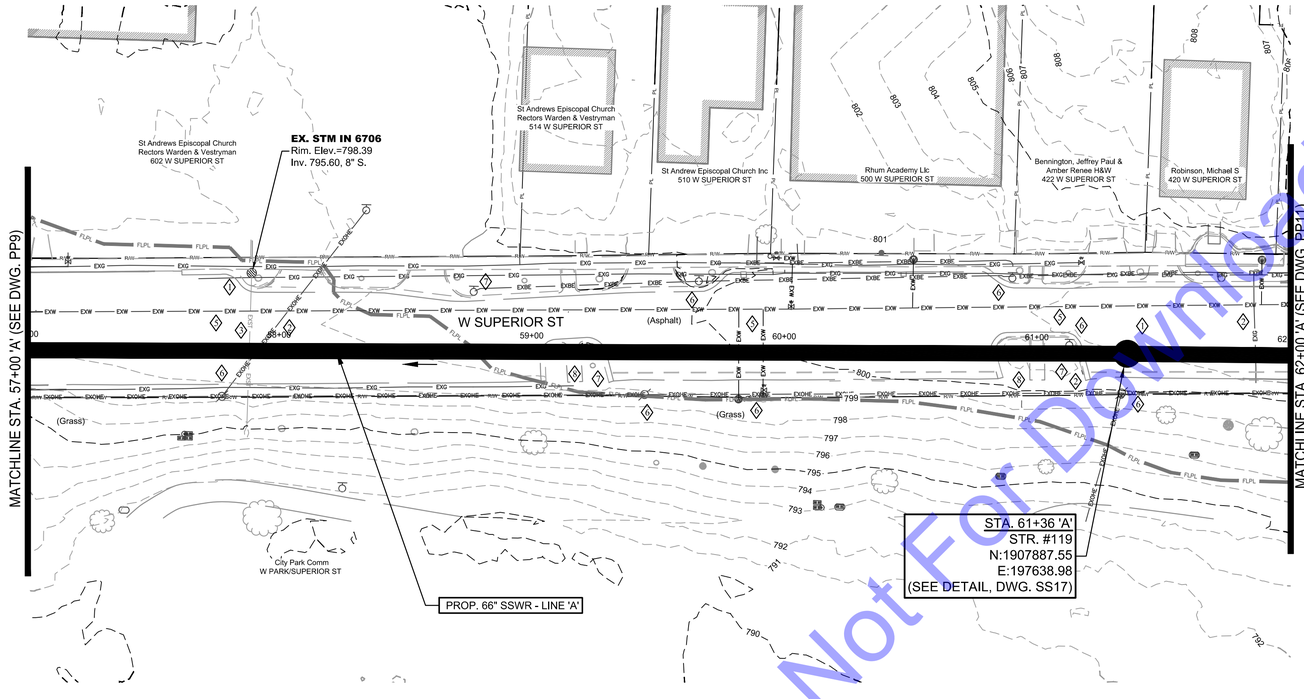

PLAN VIEW
SCALE: 1"=30'-0"

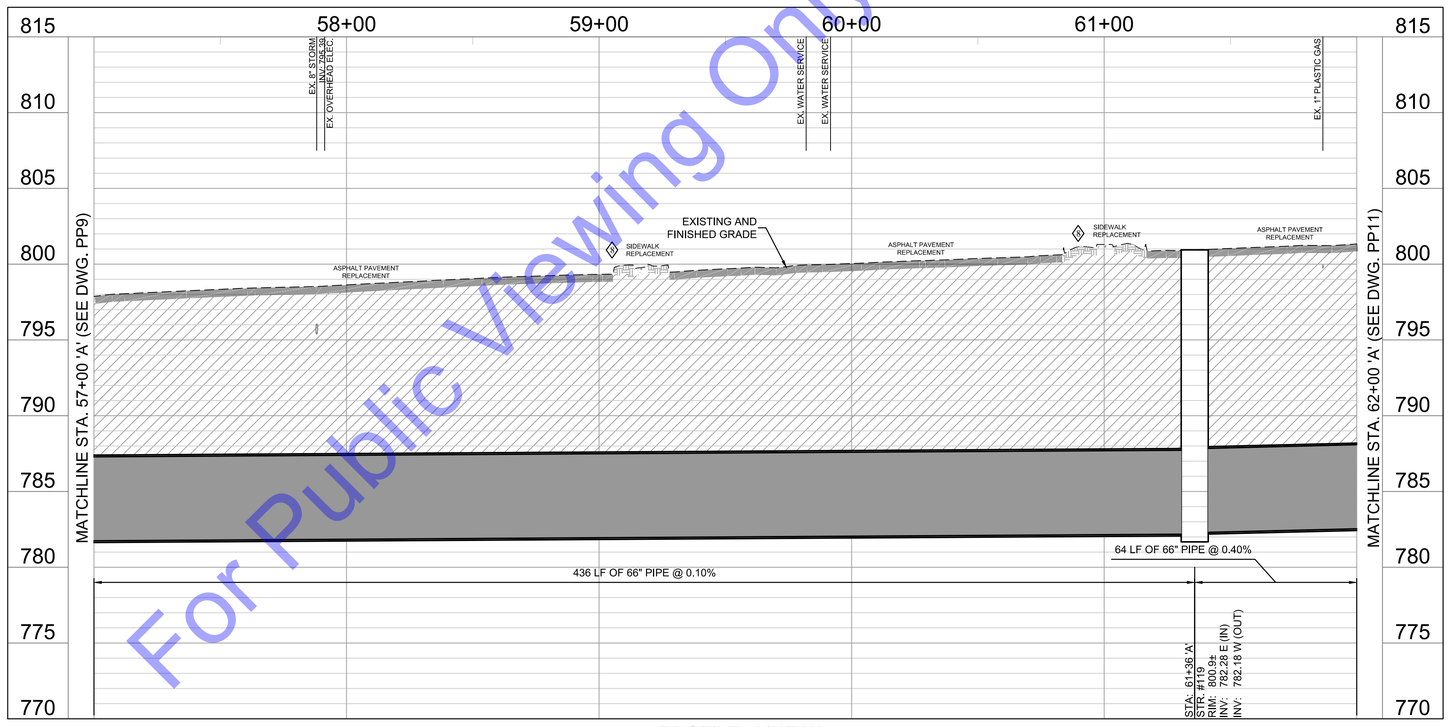

PROFILE - LINE 'A'
HORIZONTAL SCALE: 1"=30'-0"
VERTICAL SCALE: 1"=5'-0"

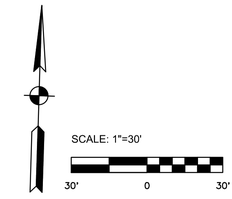

CODED NOTES

1. SEE EC DRAWINGS FOR EROSION CONTROL MEASURES.
2. CONTRACTOR TO VERIFY EX. UTILITY LOCATIONS PRIOR TO ANY CONSTRUCTION. IN THE EVENT OF UTILITY CONFLICTS, CONTRACTOR SHALL NOTIFY UTILITY TO RELOCATE TO AVOID CONFLICTS.
3. CONTRACTOR TO PROTECT ANY EXISTING STORM SEWER AND STRUCTURES AND/OR FIELD TILE ENCOUNTERED DURING CONSTRUCTION. IF ENCOUNTERED AND DISTURBED, CONTRACTOR TO REPLACE TO A CONDITION EQUAL TO OR BETTER.
4. DAMAGE TO SIGNS TO BE CONTRACTOR RESPONSIBILITY. REMOVAL AND REPLACEMENT OF SIGNS TO BE CONSIDERED INCIDENTAL TO PROJECT.
5. CONTRACTOR TO FIELD VERIFY LOCATION AND DEPTH OF EXISTING WATER MAIN PRIOR TO CONSTRUCTION ON LINE 'A'. MAINTAIN MINIMUM REQUIRED SEPARATION DURING INSTALLATION OF LINE 'A'.
6. CONTRACTOR TO PROTECT ALL UTILITY/LIGHT POLES AND OVERHEAD LINES DURING CONSTRUCTION. COORDINATE WITH ELECTRIC UTILITY SHOULD POLES REQUIRE TEMPORARY SUPPORT.
7. REMOVE TREES/BUSHES AS NEED FOR CONSTRUCTION. SEE RESTORATION SHEETS FOR REPLACEMENT OF TREES/BUSHES AFTER CONSTRUCTION.
8. CONTRACTOR TO REPLACE ASPHALT PATHS, ADA RAMPS AND/OR CONCRETE SIDE WALKS AS NEEDED FOR CONSTRUCTION (SEE RESTORATION AND GRADING SHEETS).

NOTE:
THE EXISTING AND PROPOSED PROFILE GRADES ARE BASED ON THE ELEVATIONS AT THE CENTERLINE OF THE PROPOSED SANITARY SEWER.

For Public Viewing Only-Not For Downloading

COMMONWEALTH ENGINEERS, INC.
A wealth of resources to master a common goal.
https://commonwealthengineers.com/

BRIAN KREED WILSON
REGISTERED
No. PE11900866
STATE OF INDIANA
PROFESSIONAL ENGINEER
Brian Wilson
Signature
8/15/2025
Date

CITY OF KOKOMO, INDIANA
HOWARD COUNTY

NORTH SIDE INTERCEPTOR
IMPROVEMENTS PROJECT

© 2025 BY COMMONWEALTH ENGINEERS, INC. ALL RIGHTS RESERVED. REPRODUCTION BY ANY METHOD IN WHOLE OR IN PART WITHOUT PERMISSION IS PROHIBITED

Indiana 811
Know what's below. Call before you dig.
1-800-382-5544 (ITS THE LAW)
Know what's below. 811 before you dig.

No.	Submittal / Revision	By	Date

Designed By:	Drawn By:	Checked By:
BW	BW/CH/EK	JH
Issue Date:	Project No:	Scale:
8/2025	S21082	AS SHOWN

SANITARY SEWER PLAN & PROFILE - LINE 'A' - STATION 57+00-62+00

Drawing No:
PP10
Sheet: 40 OF 137

File: Z:\SHARED\IN CLIENTS A-L\KOKOMO\S21082 NORTH SIDE INTERCEPTOR DESIGN\06 CAD\A CURRENT FILES\1 DRAWINGS\05 - S21082 - PLAN AND PROFILE.DWG
Saved: 8/8/2025 1:14:30 PM Plotted: 8/11/2025 8:30:28 AM Current User: Bryce Persinger LastSavedBy: bpersinger

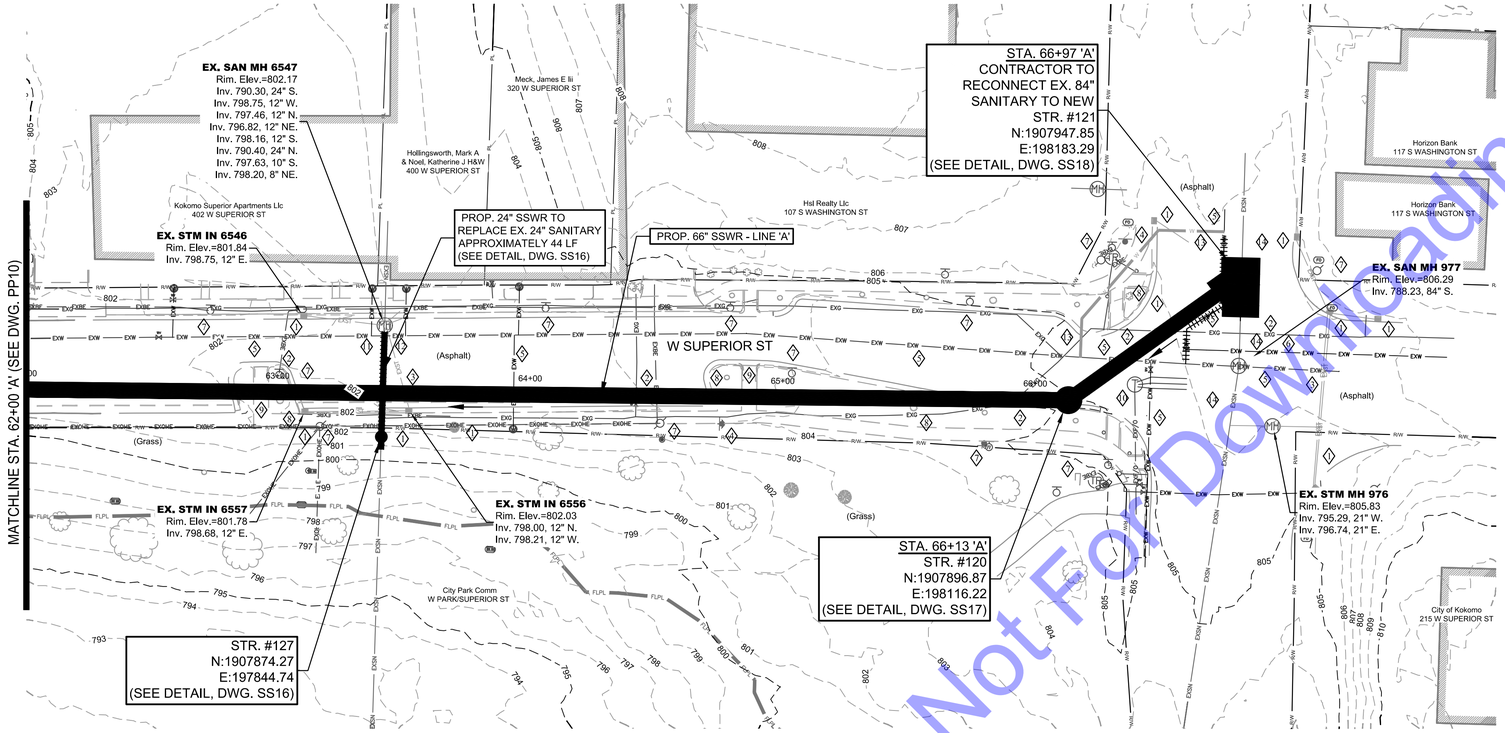

PLAN VIEW
SCALE: 1"=30'-0"

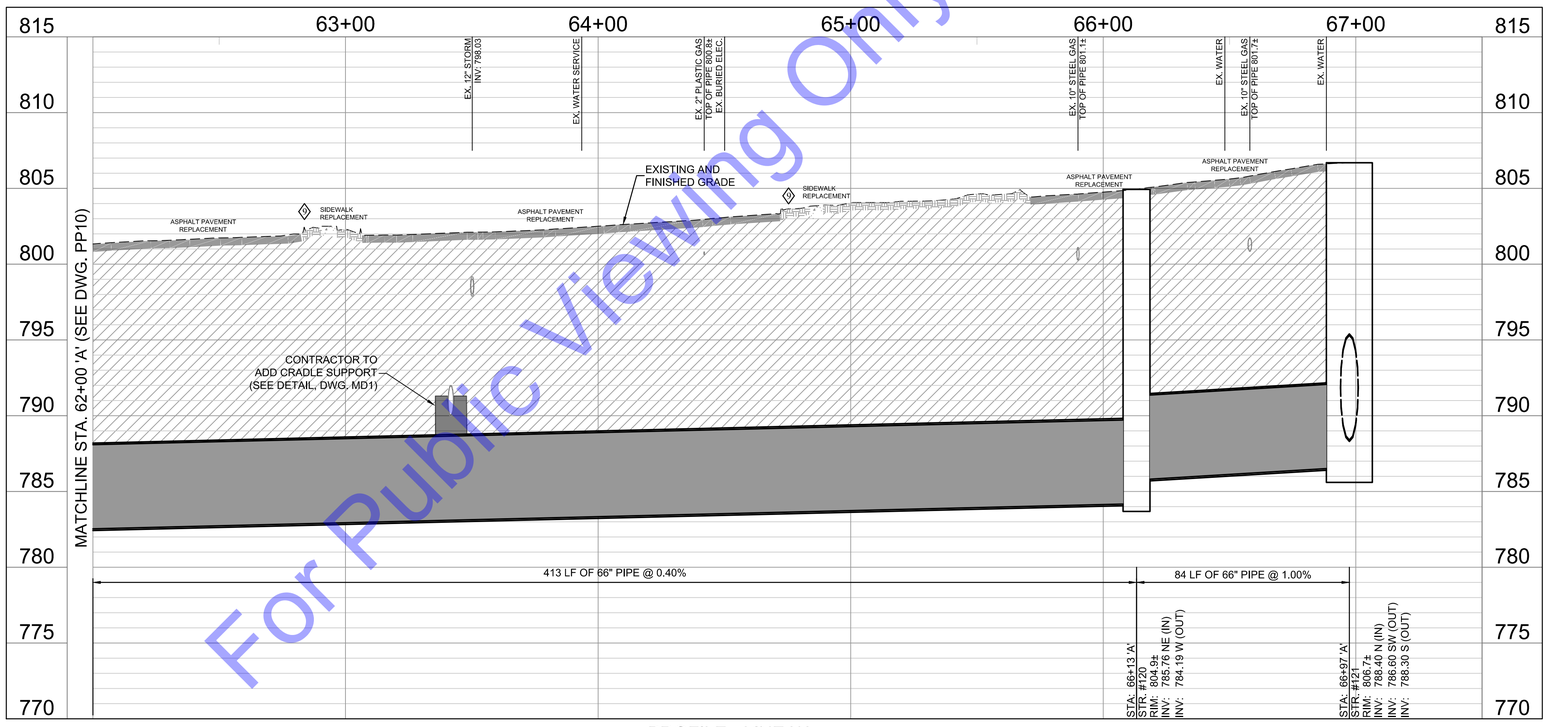

PROFILE - LINE 'A'
HORIZONTAL SCALE: 1"=30'-0"
VERTICAL SCALE: 1"=5'-0"

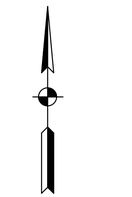

CODED NOTES

1. SEE EC DRAWINGS FOR EROSION CONTROL MEASURES.
2. CONTRACTOR TO VERIFY EX. UTILITY LOCATIONS PRIOR TO ANY CONSTRUCTION. IN THE EVENT OF UTILITY CONFLICTS, CONTRACTOR SHALL NOTIFY UTILITY TO RELOCATE TO AVOID CONFLICTS.
3. CONTRACTOR TO PROTECT ANY EXISTING STORM SEWER AND STRUCTURES AND/OR FIELD TILE ENCOUNTERED DURING CONSTRUCTION. IF ENCOUNTERED AND DISTURBED, CONTRACTOR TO REPLACE TO A CONDITION EQUAL TO OR BETTER.
4. DAMAGE TO SIGNS TO BE CONTRACTOR RESPONSIBILITY. REMOVAL AND REPLACEMENT OF SIGNS TO BE CONSIDERED INCIDENTAL TO PROJECT.
5. CONTRACTOR TO FIELD VERIFY LOCATION AND DEPTH OF EXISTING WATER MAIN PRIOR TO CONSTRUCTION ON LINE 'A'. MAINTAIN MINIMUM REQUIRED SEPARATION DURING INSTALLATION OF LINE 'A'.
6. CONTRACTOR TO FIELD VERIFY EXISTING WATER MAIN IS ABANDONED. IF SO, THEN REMOVE ANY "ABANDONED" WATER MAIN AS NEEDED FOR CONSTRUCTION AND DISPOSE OF LAWFULLY. PROVIDE INFORMATION TO ENGINEER/OWNER.
7. CONTRACTOR TO PROTECT ALL UTILITY/LIGHT POLES AND OVERHEAD LINES DURING CONSTRUCTION. COORDINATE WITH ELECTRIC UTILITY SHOULD POLES REQUIRE TEMPORARY SUPPORT.
8. REMOVE TREES/BUSHES AS NEED FOR CONSTRUCTION. SEE RESTORATION SHEETS FOR REPLACEMENT OF TREES/BUSHES AFTER CONSTRUCTION.
9. CONTRACTOR TO REPLACE ASPHALT PATHS, ADA RAMPS AND/OR CONCRETE SIDE WALKS AS NEEDED FOR CONSTRUCTION (SEE GRADING AND RESTORATION SHEETS).
10. CONTRACTOR TO PROTECT EXISTING TELEPHONE VAULT DURING CONSTRUCTION. IF PER THE CONTRACTOR'S MEANS AND METHODS THE TELEPHONE VAULT NEEDS TO BE RELOCATED, THE CONTRACTOR SHALL COORDINATE WITH THE TELEPHONE UTILITY AND RELOCATE AT THE CONTRACTOR'S EXPENSE.
11. EARLY ACTION:
CONTRACTOR TO VERIFY DEPTH, MATERIAL, THICKNESS, AND NUMBER OF PIPES ENTERING EX. SAN MH 6547. VERIFY IF ANY ARE PLUGGED/ABANDONED AND PROVIDE TO ENGINEER/OWNER.
12. CONTRACTOR TO LINE EX. SAN MH 6547.
13. CONTRACTOR TO REMOVE ABANDONED WATER MAIN AS NEEDED TO CONSTRUCT LINE 'A' AND DISPOSE OF LAWFULLY.
14. EARLY ACTION:
CONTRACTOR SHALL CONFIRM THE SIZE, SHAPE, AND DEPTH OF EXISTING COMBINED SEWER PRIOR TO CONSTRUCTION. PROVIDE INFORMATION TO THE ENGINEER/OWNER.

NOTE:
THE EXISTING AND PROPOSED PROFILE GRADES ARE BASED ON THE ELEVATIONS AT THE CENTERLINE OF THE PROPOSED SANITARY SEWER.

For Public Viewing Only-Not For Download

COMMONWEALTH ENGINEERS, INC.
A wealth of resources to master a common goal.
https://commonwealthengineers.com/

BRIAN KREED WILSON
REGISTERED
No. PE11900866
STATE OF INDIANA
PROFESSIONAL ENGINEER
Brian Wilson 8/15/2025
Signature Date

CITY OF KOKOMO, INDIANA
HOWARD COUNTY

NORTH SIDE INTERCEPTOR
IMPROVEMENTS PROJECT

© 2025 BY COMMONWEALTH ENGINEERS, INC. ALL RIGHTS RESERVED. REPRODUCTION BY ANY METHOD IN WHOLE OR IN PART WITHOUT PERMISSION IS PROHIBITED

Indiana 811 Know what's below. Call before you dig.
Know what's below. 811 before you dig.
1-800-382-5544 (IT'S THE LAW)

No.	Submittal / Revision	By	Date

Designed By:	Drawn By:	Checked By:
BW	BW/CH/EK	JH
Issue Date: 8/2025	Project No: S21082	Scale: AS SHOWN

SANITARY SEWER PLAN & PROFILE - LINE 'A' - STATION 62+00-66+97

Drawing No:
PP11
Sheet: 41 OF 137

File: Z:\SHARED\N CLIENTS A-L\KOKOMO\S21082 NORTH SIDE INTERCEPTOR DESIGN\06 CAD\A CURRENT FILES\1 DRAWINGS\05 - S21082 - PLAN AND PROFILE.DWG
Saved: 8/15/2025 1:42:10 PM Plotted: 8/18/2025 8:31:47 AM Current User: Brian Waterman LastSavedBy: bwaterman

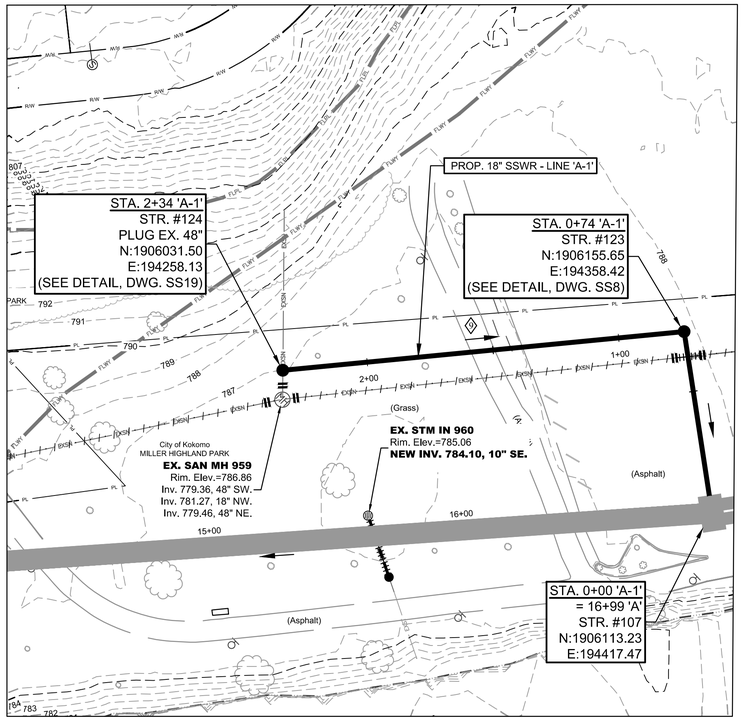

PLAN VIEW
SCALE: 1"=30'-0"

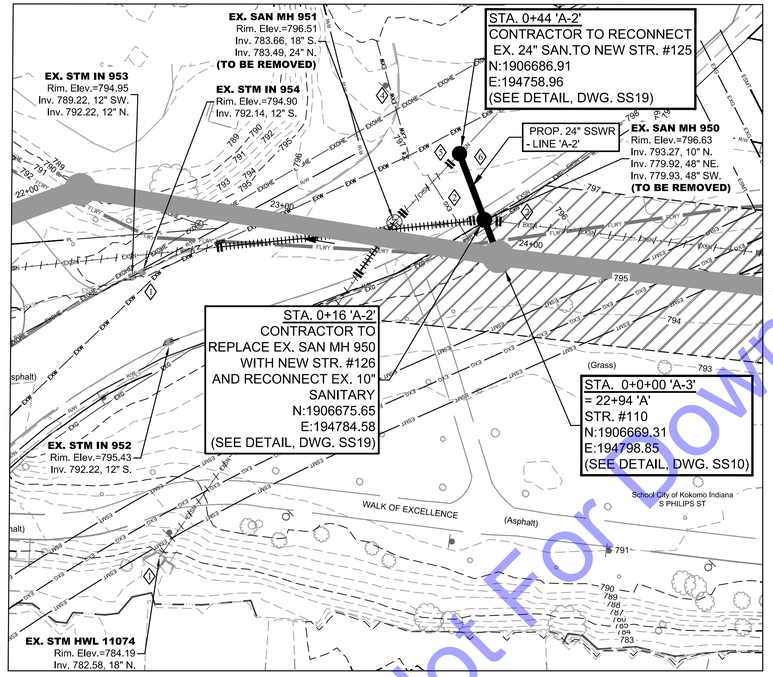

PLAN VIEW
SCALE: 1"=30'-0"

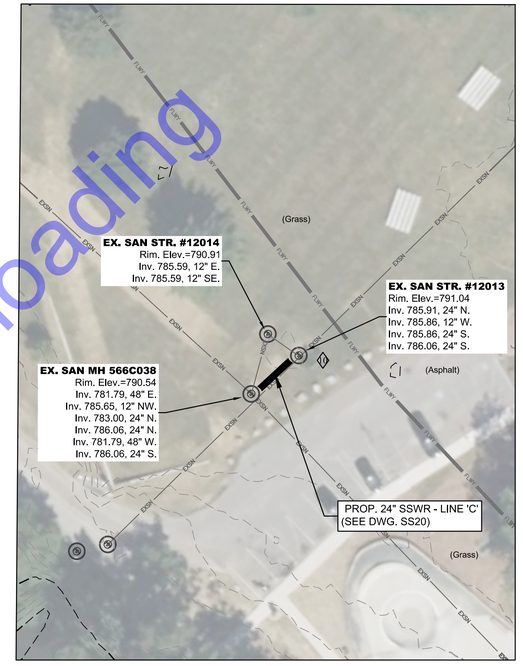

PLAN VIEW
SCALE: 1"=30'-0"

NOTE:
THE EXISTING AND PROPOSED PROFILE GRADES ARE BASED ON THE ELEVATIONS AT THE CENTERLINE OF THE PROPOSED SANITARY SEWER.

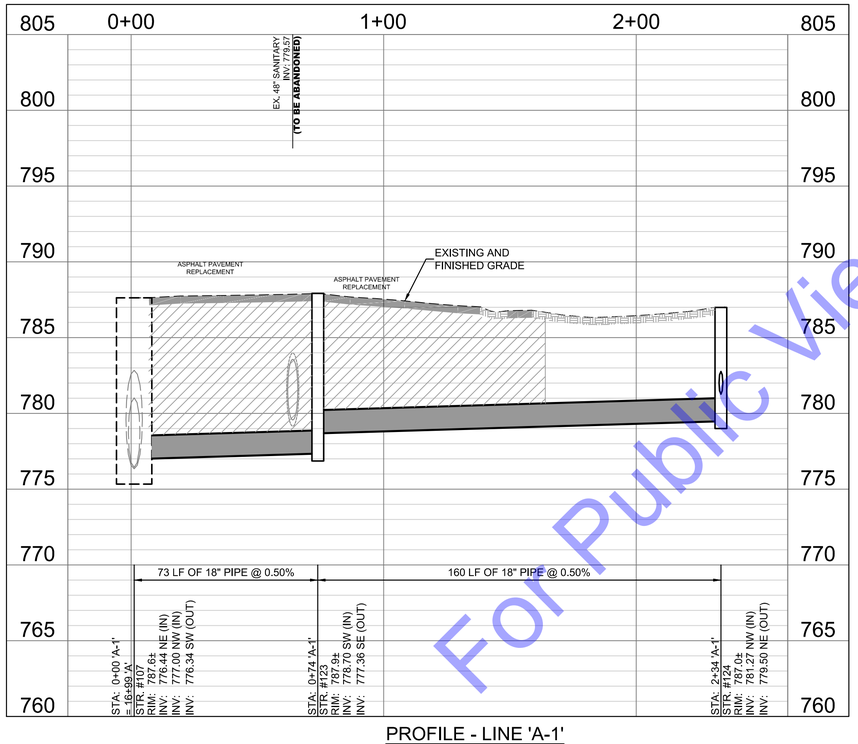

PROFILE - LINE 'A-1'
HORIZONTAL SCALE: 1"=30'-0"
VERTICAL SCALE: 1"=5'-0"

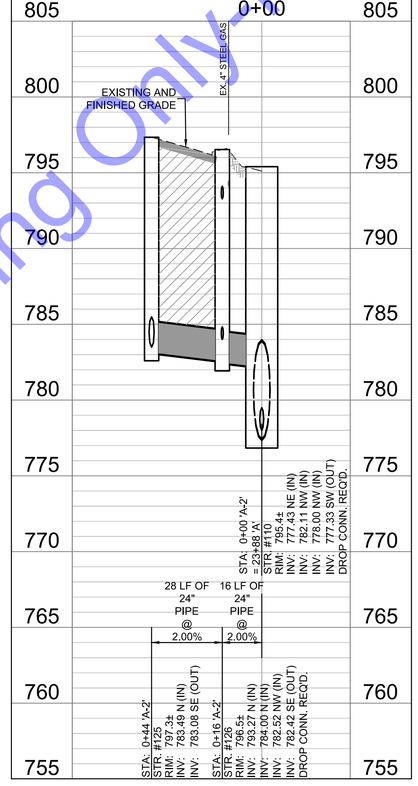

PROFILE - LINE 'A-2'
HORIZONTAL SCALE: 1"=30'-0"
VERTICAL SCALE: 1"=5'-0"

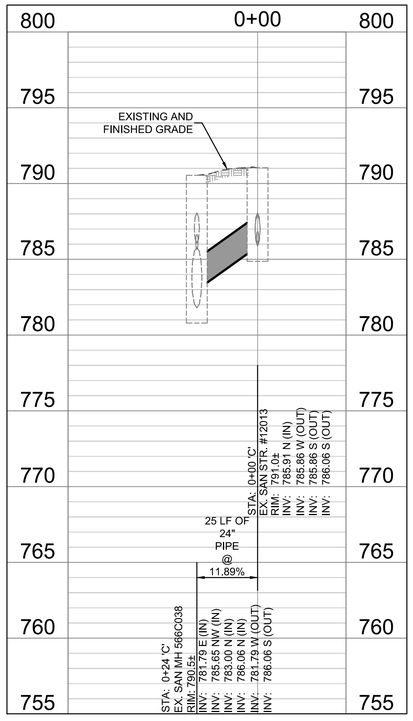

PROFILE - LINE 'C'
HORIZONTAL SCALE: 1"=30'-0"
VERTICAL SCALE: 1"=5'-0"

CODED NOTES

1. SEE EC DRAWINGS FOR EROSION CONTROL MEASURES.
2. CONTRACTOR TO VERIFY EX. UTILITY LOCATIONS PRIOR TO ANY CONSTRUCTION. IN THE EVENT OF UTILITY CONFLICTS, CONTRACTOR SHALL NOTIFY UTILITY TO RELOCATE TO AVOID CONFLICTS.
3. CONTRACTOR TO PROTECT ANY EXISTING STORM SEWER AND STRUCTURES AND/OR FIELD TILE ENCOUNTERED DURING CONSTRUCTION. IF ENCOUNTERED AND DISTURBED, CONTRACTOR TO REPLACE TO A CONDITION EQUAL TO OR BETTER.
4. DAMAGE TO SIGNS TO BE CONTRACTOR RESPONSIBILITY. REMOVAL AND REPLACEMENT OF SIGNS TO BE CONSIDERED INCIDENTAL TO PROJECT.
5. CONTRACTOR TO FIELD VERIFY LOCATION AND DEPTH OF EXISTING WATER MAIN PRIOR TO CONSTRUCTION ON LINE 'A'. MAINTAIN MINIMUM REQUIRED SEPARATION DURING INSTALLATION OF LINE 'A'.
6. CONTRACTOR TO FIELD LOCATE EXISTING 24" SANITARY PRIOR TO CONSTRUCTION.
7. CONTRACTOR TO PROTECT ALL UTILITY/LIGHT POLES AND OVERHEAD LINES DURING CONSTRUCTION. COORDINATE WITH ELECTRIC UTILITY SHOULD POLES REQUIRE TEMPORARY SUPPORT.
8. REMOVE TREES/BUSHES AS NEED FOR CONSTRUCTION. SEE RESTORATION SHEETS FOR REPLACEMENT OF TREES/BUSHES AFTER CONSTRUCTION.
9. CONTRACTOR TO REPLACE ASPHALT PATHS AND/OR CONCRETE SIDE WALKS AS NEEDED FOR CONSTRUCTION (SEE RESTORATION SHEETS).
10. EARLY ACTION:
CONTRACTOR SHALL CONFIRM THE INSIDE DIMENSIONS OF EX. STR. #12013. PROVIDE INFORMATION TO OWNER/ENGINEER PRIOR TO CONSTRUCTION.

SCALE: 1"=30'
30' 0 30'

COMMONWEALTH ENGINEERS, INC.
A wealth of resources to master a common goal.
https://commonwealthengineers.com/

BRIAN KREED WILSON
REGISTERED
No. PE11900866
STATE OF INDIANA
PROFESSIONAL ENGINEER
Brian Wilson
Signature
8/15/2025
Date

CITY OF KOKOMO, INDIANA
HOWARD COUNTY

NORTH SIDE INTERCEPTOR IMPROVEMENTS PROJECT

© 2025 BY COMMONWEALTH ENGINEERS, INC. ALL RIGHTS RESERVED. REPRODUCTION BY ANY METHOD IN WHOLE OR IN PART WITHOUT PERMISSION IS PROHIBITED

Know what's below. Call before you dig.
Know what's below. 811 before you dig.
1-800-382-5544
(ITS THE LAW)

No.	Submittal Revision	By	Date

Designed By:	Drawn By:	Checked By:
BW	BW/CH/EK	JH
Issue Date: 8/2025	Project No: S21082	Scale: AS SHOWN

SANITARY SEWER PLAN & PROFILE - LINE 'A-1' - STA. 0+00-2+34; LINE 'A-2' - STA. 0+00-0+44; LINE 'C' - STA. 0+00-0+24

Drawing No:
PP12
Sheet: 42 OF 137

For Public Viewing Only - Not For Downloading

File: Z:\SHARED\IN CLIENTS A-L\KOKOMO\S21082 NORTH SIDE INTERCEPTOR DESIGN\06 CAD\A CURRENT FILES\1 DRAWINGS\05 - S21082 - PLAN AND PROFILE.DWG
Saved: 8/15/2025 1:42:10 PM Plotted: 8/18/2025 8:34:24 AM Current User: Brian Waterman LastSavedBy: bwaterman

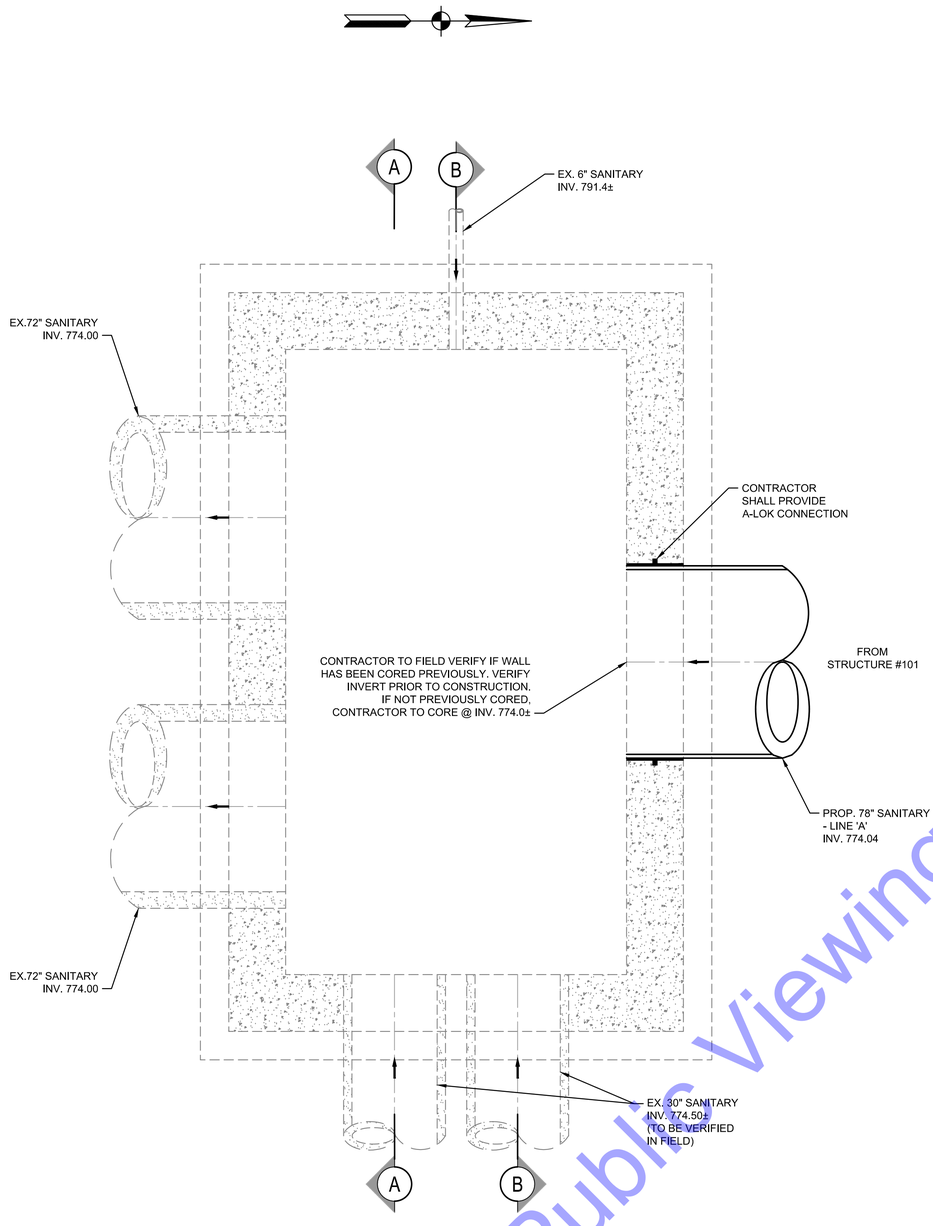

EX. PLAN VIEW
(SEE DWG. PP1)

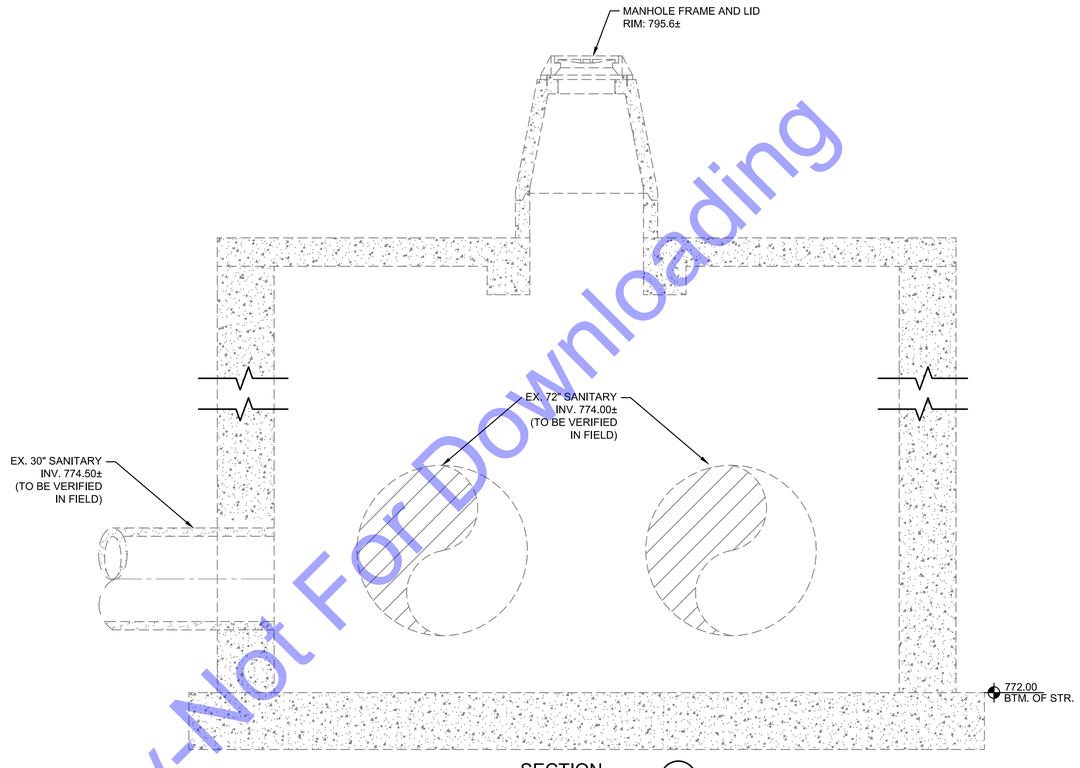

SECTION A

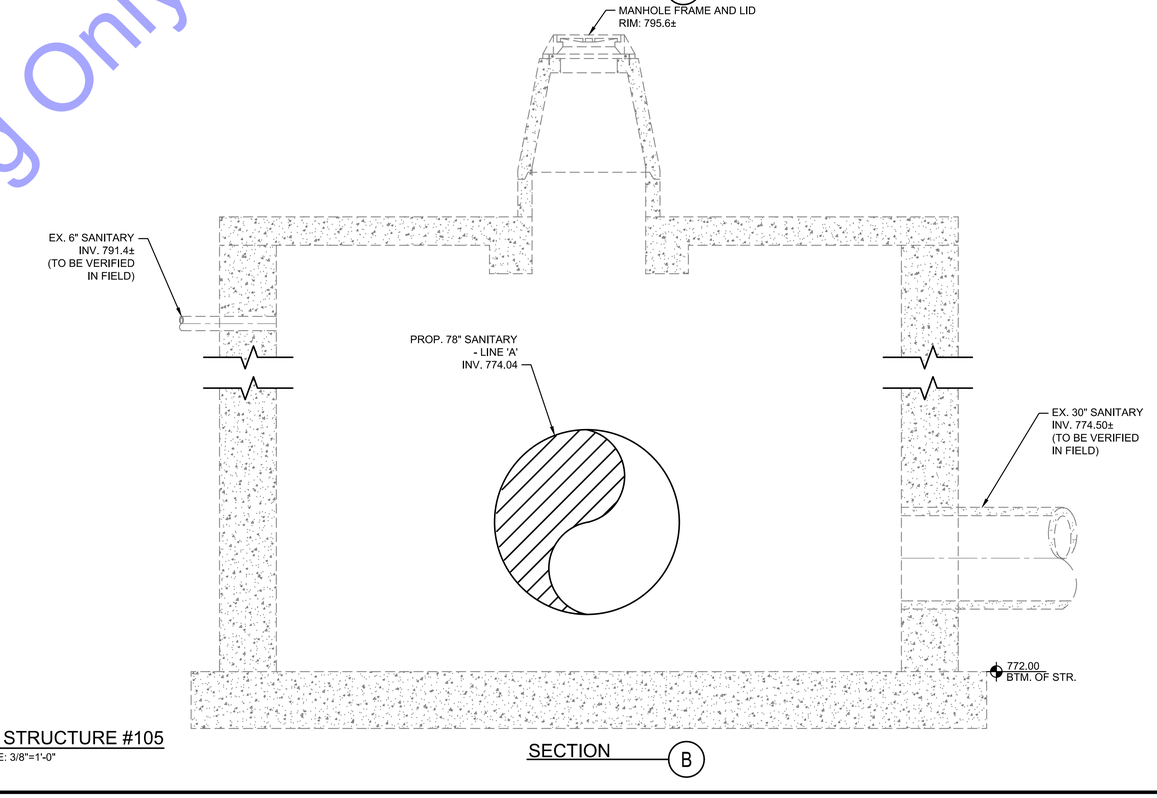

EX. STRUCTURE #105
SCALE: 3/8"=1'-0"

SECTION B

For Public Viewing Only-Not For Downloading

COMMONWEALTH ENGINEERS, INC.
A wealth of resources to master a common goal.
https://commonwealthengineers.com/

BRIAN KREED WILSON
REGISTERED
No. PE11900866
STATE OF
INDIANA
PROFESSIONAL ENGINEER

Brian Wilson
Signature

8/15/2025
Date

CITY OF KOKOMO, INDIANA
HOWARD COUNTY

NORTH SIDE INTERCEPTOR
IMPROVEMENTS PROJECT

© 2025 BY COMMONWEALTH ENGINEERS, INC. ALL RIGHTS RESERVED. REPRODUCTION BY ANY METHOD IN WHOLE OR IN PART WITHOUT PERMISSION IS PROHIBITED

Know what's below. Call before you dig.
1-800-382-5544 (ITS THE LAW)

No.	Submittal Revision	By	Date

Designed By:	Drawn By:	Checked By:
BW	BW/CH/EK	JH
Issue Date:	Project No:	Scale:
8/2025	S21082	AS SHOWN

STRUCTURE DETAILS -
EXISTING STR. #105

Drawing No:
SS1

Sheet: 43 OF 137

File: Z:\SHARED\IN CLIENTS A-L\KOKOMO\S21082 NORTH SIDE INTERCEPTOR DESIGN\06 CAD\A CURRENT FILES\1 DRAWINGS\06 - S21082 - STRUCTURE DETAILS.DWG
Saved: 8/11/2025 8:51:17 AM Plotted: 8/11/2025 8:56:38 AM Current User: Bryce Persinger LastSavedBy: bwaterman

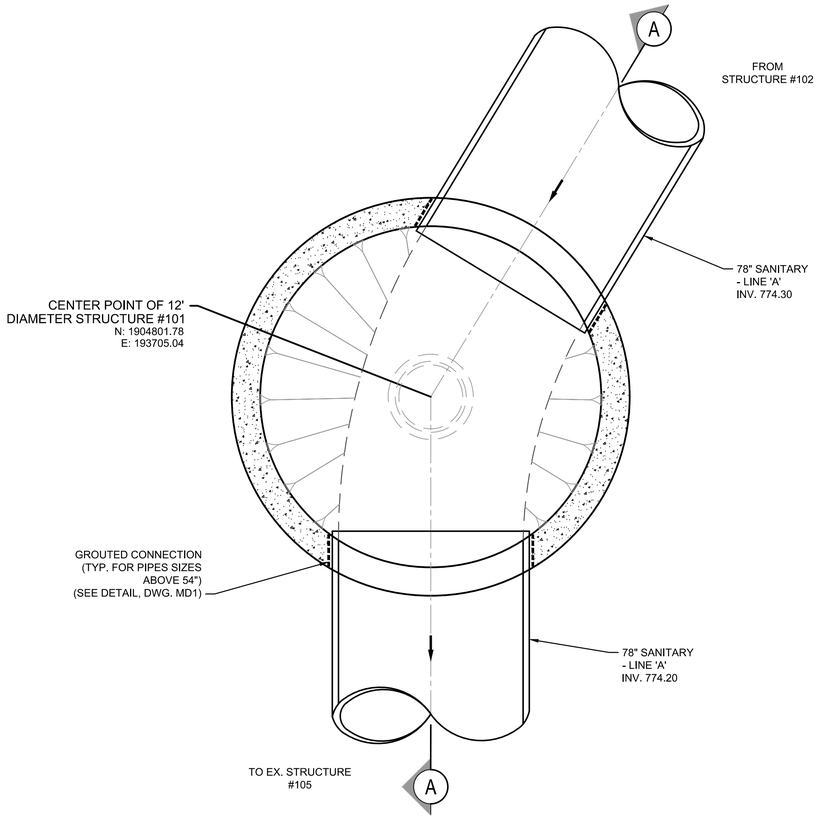

PROP. PLAN VIEW

(SEE DWG. PP1)

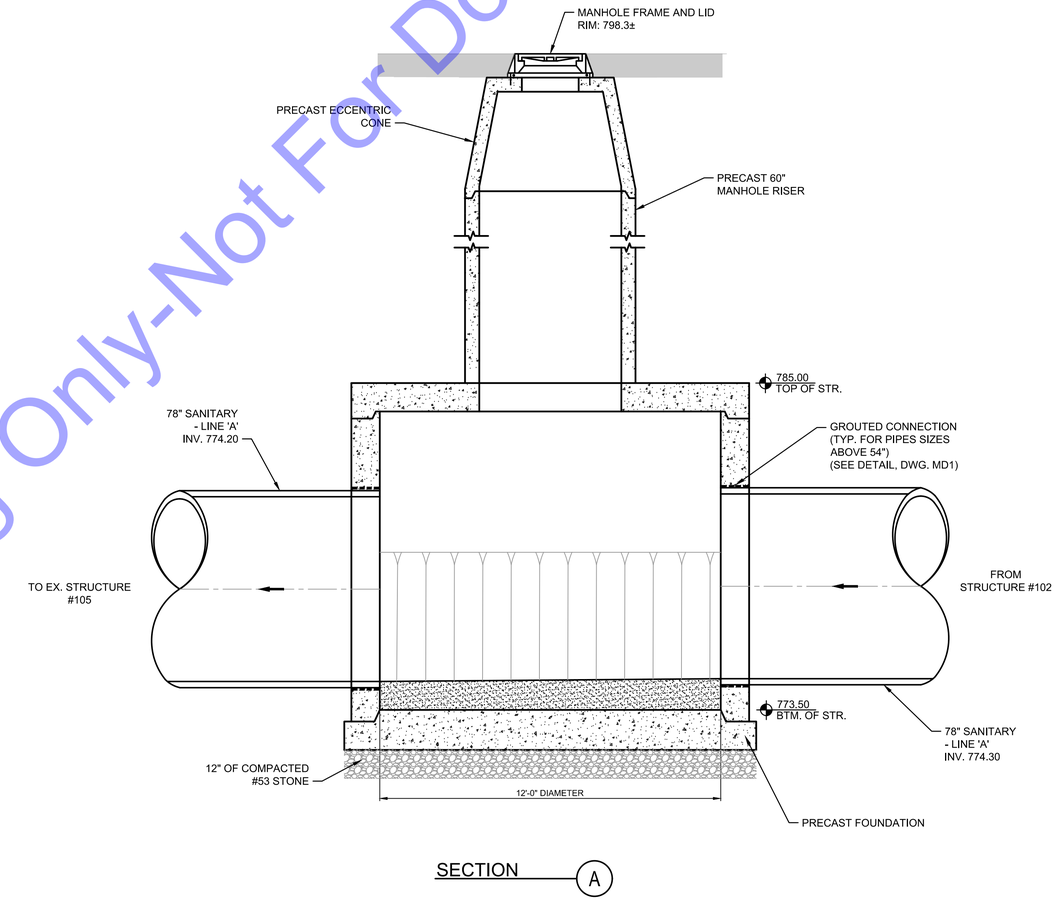

SECTION A

12' DIAMETER STRUCTURE #101

SCALE: 3/8"=1'-0"

THE CONTRACTOR SHALL EXTEND STRUCTURE BASE OR USE ANTI-FLOATATION METHODS TO MEET BUOYANCY REQUIREMENTS (SEE SPECIFICATIONS).

For Public Viewing Only-Not For Downloading

COMMONWEALTH ENGINEERS, INC.
A wealth of resources to master a common goal.
https://commonwealthengineers.com/

BRIAN KREED WILSON
REGISTERED
No. PE11900866
STATE OF
INDIANA
PROFESSIONAL ENGINEER

Signature: Brian Wilson Date: 8/15/2025

CITY OF KOKOMO, INDIANA
HOWARD COUNTY

NORTH SIDE INTERCEPTOR
IMPROVEMENTS PROJECT

© 2025 BY COMMONWEALTH ENGINEERS, INC. ALL RIGHTS RESERVED. REPRODUCTION, BY ANY METHOD IN WHOLE OR IN PART WITHOUT PERMISSION IS PROHIBITED

Know what's below. Call before you dig.
1-800-382-5544
(ITS THE LAW)

No.	Submittal Revision	By	Date

Designed By:	Drawn By:	Checked By:
BW	BW/CH/EK	JH
Issue Date: 8/2025	Project No: S21082	Scale: AS SHOWN

STRUCTURE DETAILS - STR. #101

Drawing No: SS2

Sheet: 44 OF 137

File: Z:\SHARED\IN CLIENTS A-L\KOKOMO\S21082 NORTH SIDE INTERCEPTOR DESIGN\06 CAD\A CURRENT FILES\1 DRAWINGS\06 - S21082 - STRUCTURE DETAILS.DWG
Saved: 8/11/2025 8:51:17 AM Plotted: 8/11/2025 8:56:39 AM Current User: Bryce Persinger LastSavedBy: bwaterman

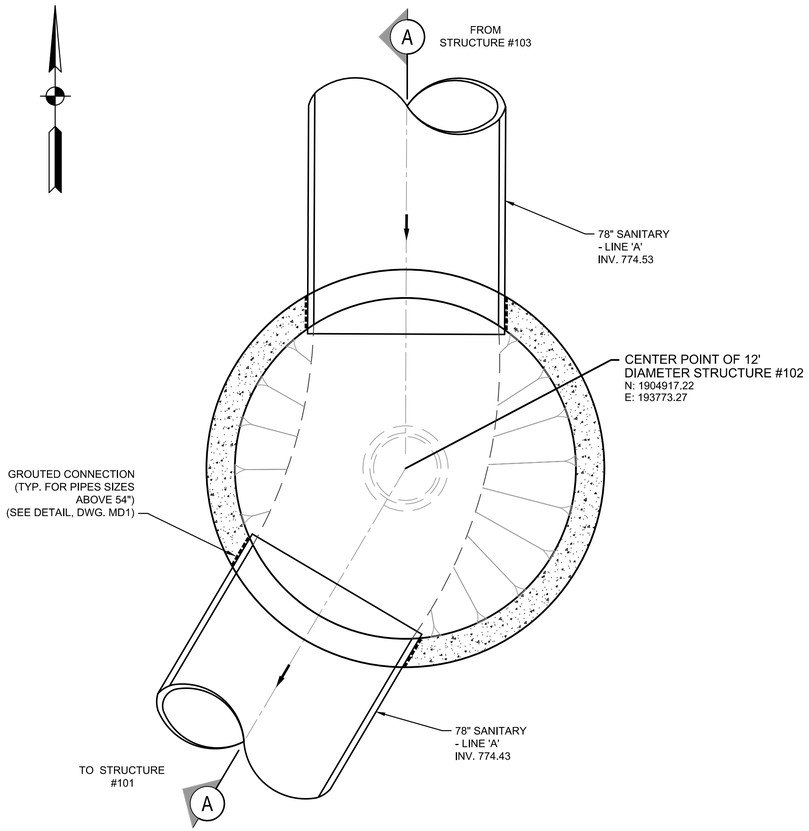

PROP. PLAN VIEW

(SEE DWG. PP1)

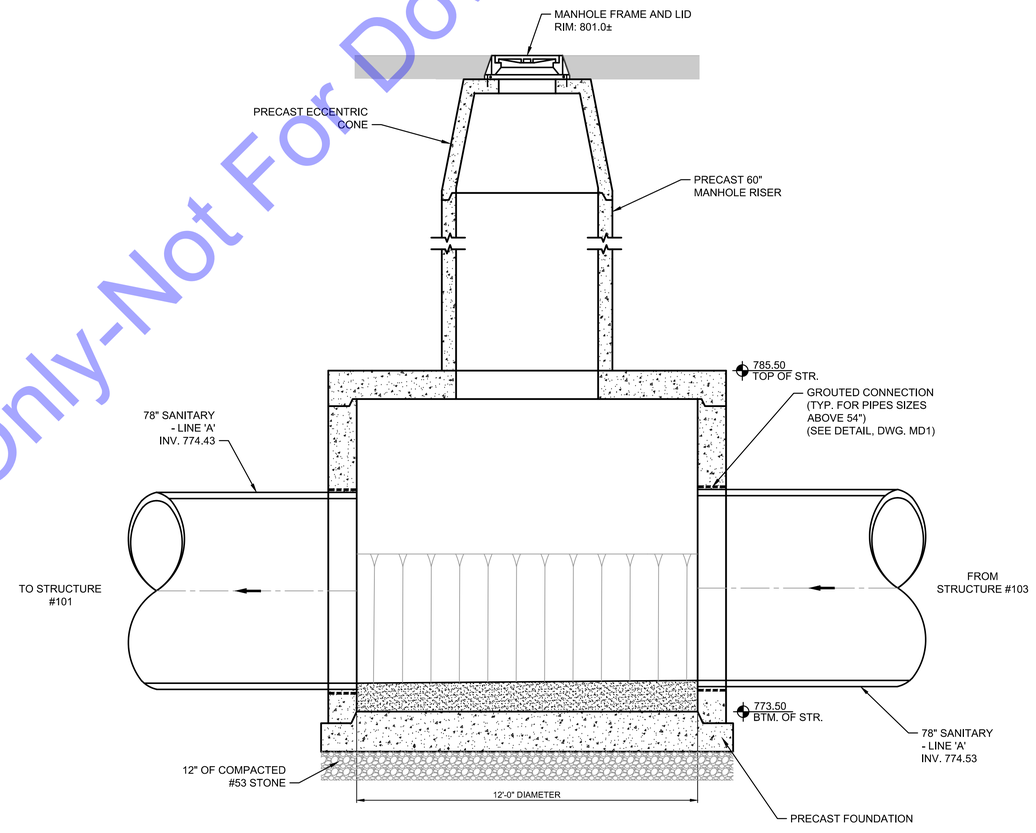

SECTION A

12' DIAMETER STRUCTURE #102

SCALE: 3/8"=1'-0"

THE CONTRACTOR SHALL EXTEND STRUCTURE BASE OR USE ANTI-FLOATATION METHODS TO MEET BUOYANCY REQUIREMENTS (SEE SPECIFICATIONS).

For Public Viewing Only-Not For Downloading

COMMONWEALTH ENGINEERS, INC.
A wealth of resources to master a common goal.
https://commonwealthengineers.com/

BRIAN KREED WILSON
REGISTERED
No. PE11900866
STATE OF
INDIANA
PROFESSIONAL ENGINEER

Signature: Brian Wilson Date: 8/15/2025

CITY OF KOKOMO, INDIANA
HOWARD COUNTY

NORTH SIDE INTERCEPTOR
IMPROVEMENTS PROJECT

© 2025 BY COMMONWEALTH ENGINEERS, INC. ALL RIGHTS RESERVED. REPRODUCTION BY ANY METHOD IN WHOLE OR IN PART WITHOUT PERMISSION IS PROHIBITED

Indiana 811
Know what's below. Call before you dig.
Know what's below. 811 before you dig.
1-800-382-5544
(ITS THE LAW)

No.	Submittal/ Revision	By	Date

Designed By:	Drawn By:	Checked By:
BW	BW/CH/EK	JH
Issue Date: 8/2025	Project No: S21082	Scale: AS SHOWN

STRUCTURE DETAILS - STR. #102

Drawing No: SS3

Sheet: 45 OF 137

File: Z:\SHARED\IN CLIENTS A-L\KOKOMO\S21082 NORTH SIDE INTERCEPTOR DESIGN\06 CAD\A CURRENT FILES\1 DRAWINGS\06 - S21082 - STRUCTURE DETAILS.DWG
Saved: 8/11/2025 8:51:17 AM Plotted: 8/11/2025 8:56:40 AM Current User: Bryce Persinger LastSavedBy: bwaterman

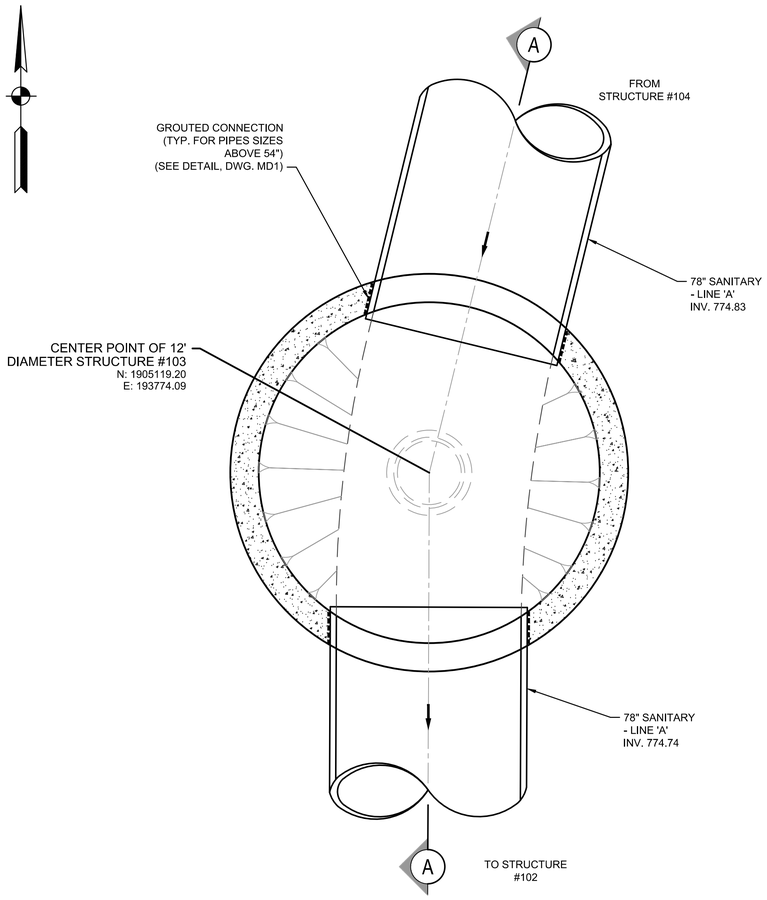

PROP. PLAN VIEW
(SEE DWG. PP1)

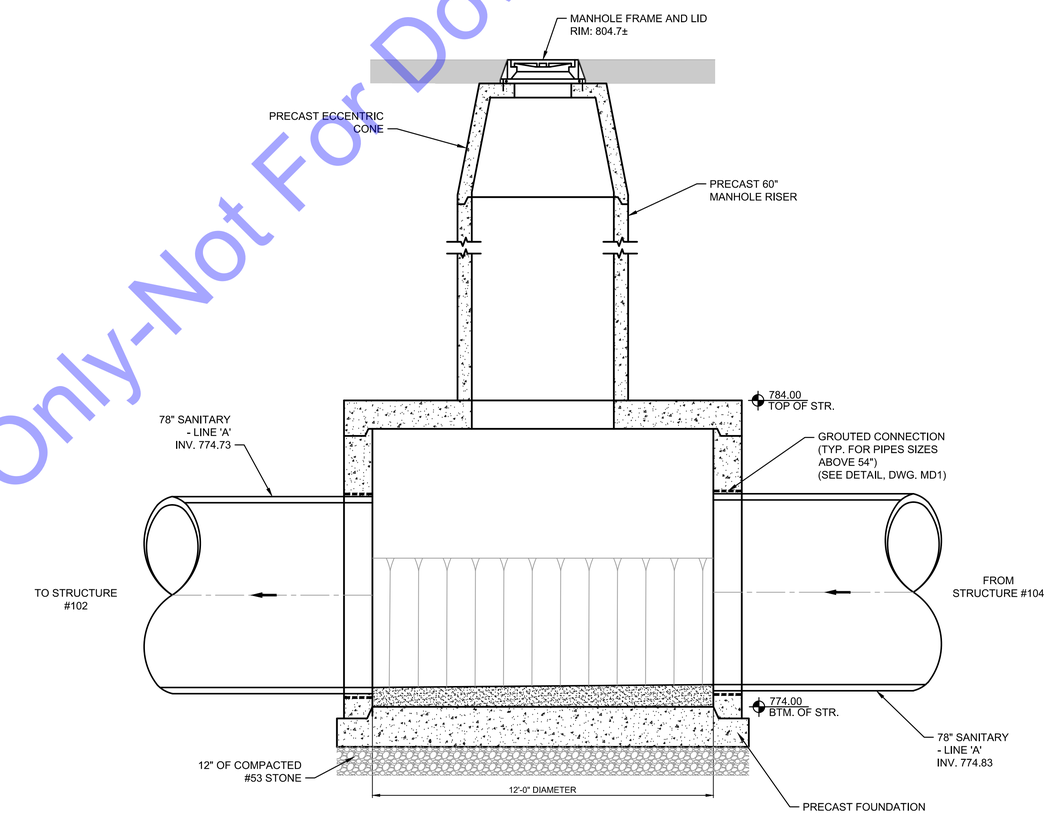

SECTION A

12' DIAMETER STRUCTURE #103
SCALE: 3/8"=1'-0"

THE CONTRACTOR SHALL EXTEND STRUCTURE BASE OR USE ANTI-FLOATATION METHODS TO MEET BUOYANCY REQUIREMENTS (SEE SPECIFICATIONS).

For Public Viewing Only-Not For Downloading

COMMONWEALTH ENGINEERS, INC.
A wealth of resources to master a common goal.
https://commonwealthengineers.com/

BRIAN KREED WILSON
REGISTERED
No. PE11900866
STATE OF
INDIANA
PROFESSIONAL ENGINEER

Brian Wilson 8/15/2025
Signature Date

CITY OF KOKOMO, INDIANA
HOWARD COUNTY

NORTH SIDE INTERCEPTOR
IMPROVEMENTS PROJECT

© 2025 BY COMMONWEALTH ENGINEERS, INC. ALL RIGHTS RESERVED. REPRODUCTION BY ANY METHOD IN WHOLE OR IN PART WITHOUT PERMISSION IS PROHIBITED

Indiana811
Know what's below. Call before you dig.
Know what's below. 811 before you dig.
1-800-382-5544
(ITS THE LAW)

No.	Submittal / Revision	By	Date

Designed By:	Drawn By:	Checked By:
BW	BW/CH/EK	JH
Issue Date:	Project No:	Scale:
8/2025	S21082	AS SHOWN

STRUCTURE DETAILS - STR. #103

Drawing No:
SS4

File: Z:\SHARED\IN CLIENTS A-L\KOKOMO\S21082 NORTH SIDE INTERCEPTOR DESIGN\06 CAD\A CURRENT FILES\1 DRAWINGS\06 - S21082 - STRUCTURE DETAILS.DWG
Saved: 8/11/2025 8:51:17 AM Plotted: 8/11/2025 8:56:42 AM Current User: Bryce Persinger LastSavedBy: bwaterman

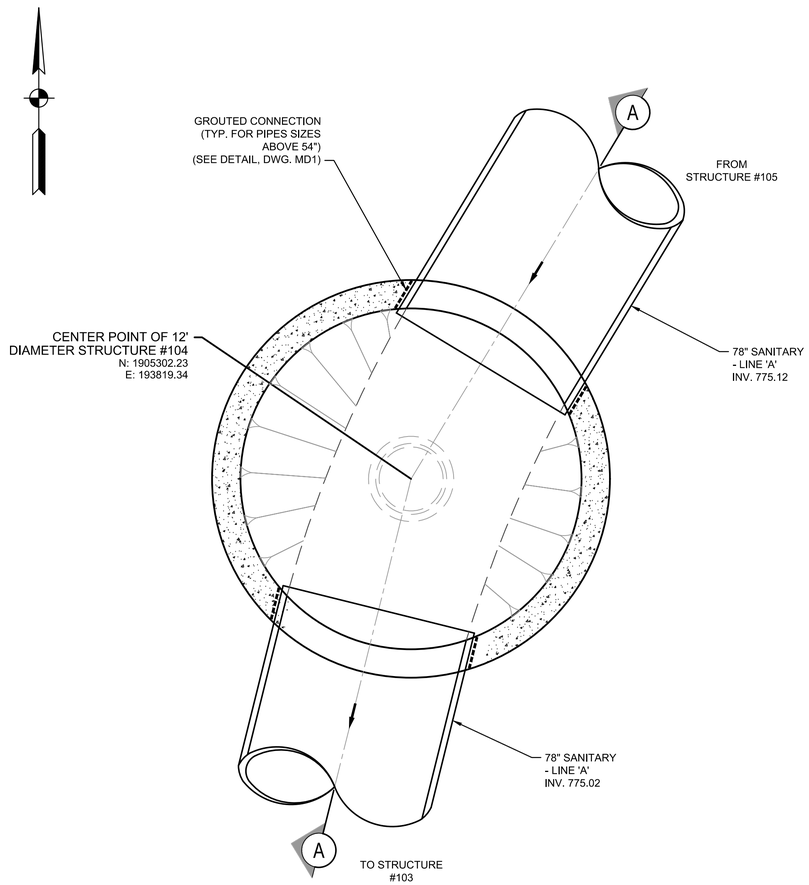

PROP. PLAN VIEW

(SEE DWG. PP2)

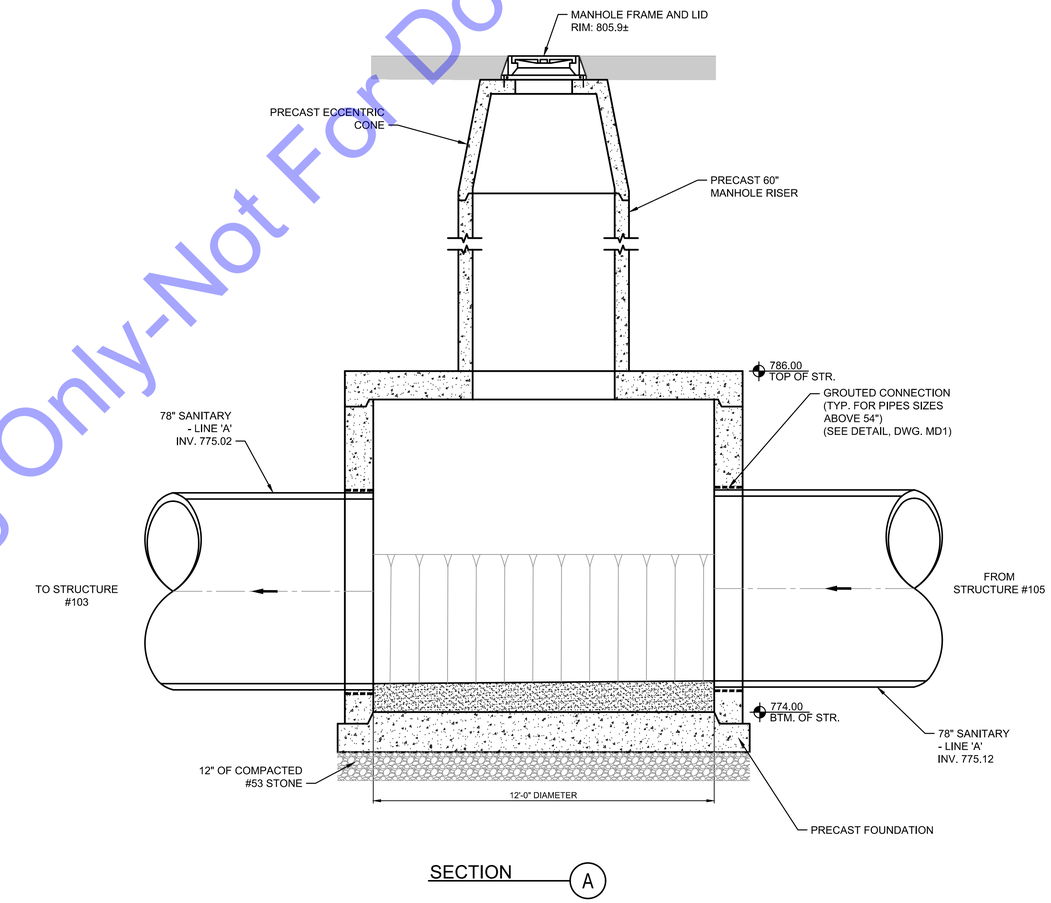

SECTION A

12' DIAMETER STRUCTURE #104

SCALE: 3/8"=1'-0"

THE CONTRACTOR SHALL EXTEND STRUCTURE BASE OR USE ANTI-FLOATATION METHODS TO MEET BUOYANCY REQUIREMENTS (SEE SPECIFICATIONS).

For Public Viewing Only-Not For Downloading

COMMONWEALTH ENGINEERS, INC.
A wealth of resources to master a common goal.
https://commonwealthengineers.com/

BRIAN KREED WILSON
REGISTERED
No. PE11900866
STATE OF
INDIANA
PROFESSIONAL ENGINEER

Signature: Brian Wilson — Date: 8/15/2025

CITY OF KOKOMO, INDIANA
HOWARD COUNTY

NORTH SIDE INTERCEPTOR
IMPROVEMENTS PROJECT

© 2025 BY COMMONWEALTH ENGINEERS, INC. ALL RIGHTS RESERVED. REPRODUCTION BY ANY METHOD IN WHOLE OR IN PART WITHOUT PERMISSION IS PROHIBITED

Know what's below. Call before you dig.
1-800-382-5544 (ITS THE LAW)

No.	Submittal / Revision	By	Date

Designed By:	Drawn By:	Checked By:
BW	BW/CH/EK	JH
Issue Date: 8/2025	Project No: S21082	Scale: AS SHOWN

STRUCTURE DETAILS - STR. #104

Drawing No: SS5

Sheet: 47 OF 137

File: Z:\SHARED\IN CLIENTS A-L\KOKOMO\S21082 NORTH SIDE INTERCEPTOR DESIGN\06 CAD\A CURRENT FILES\1 DRAWINGS\06 - S21082 - STRUCTURE DETAILS.DWG
Saved: 8/11/2025 8:51:17 AM Plotted: 8/11/2025 8:56:44 AM Current User: Bryce Persinger LastSavedBy: bwaterman

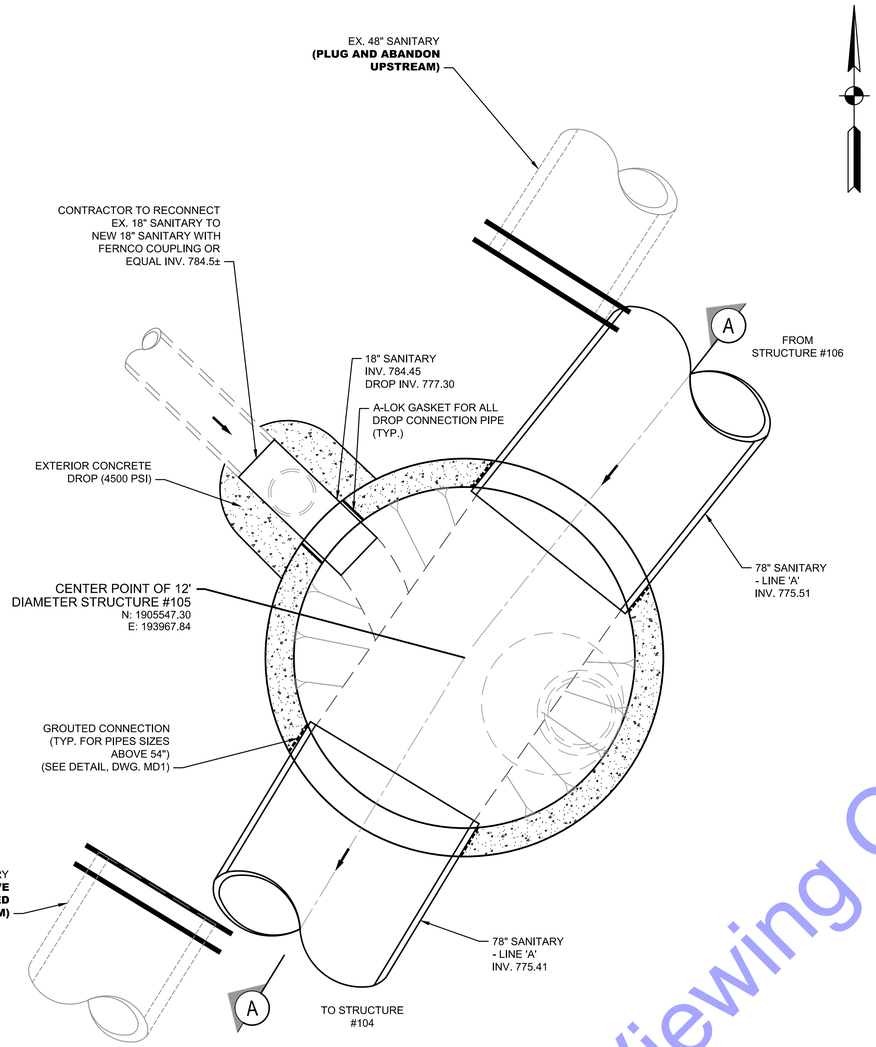

PROP. PLAN VIEW
(SEE DWG. PP2)

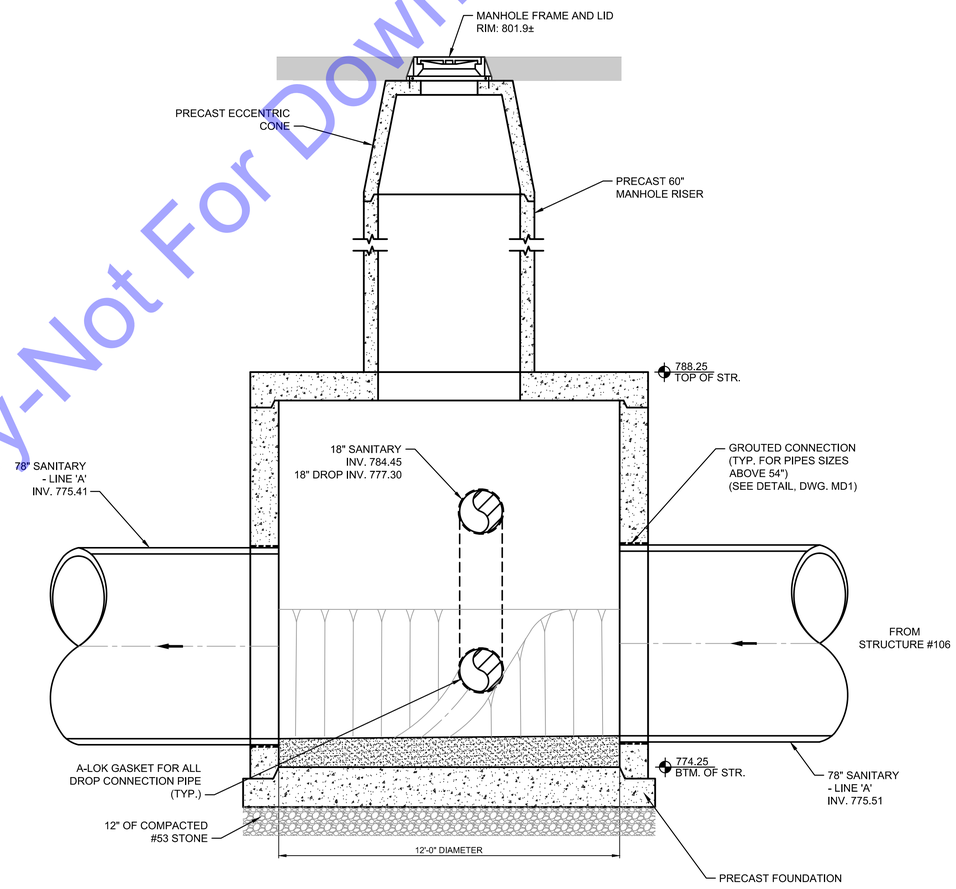

SECTION A

12' DIAMETER STRUCTURE #105
SCALE: 3/8"=1'-0"

THE CONTRACTOR SHALL EXTEND STRUCTURE BASE OR USE ANTI-FLOATATION METHODS TO MEET BUOYANCY REQUIREMENTS (SEE SPECIFICATIONS).

For Public Viewing Only-Not For Downloading

COMMONWEALTH ENGINEERS, INC.
A wealth of resources to master a common goal.
https://commonwealthengineers.com/

BRIAN KREED WILSON
REGISTERED
No. PE11900866
STATE OF INDIANA
PROFESSIONAL ENGINEER
Signature 8/15/2025 Date

CITY OF KOKOMO, INDIANA
HOWARD COUNTY

NORTH SIDE INTERCEPTOR IMPROVEMENTS PROJECT

© 2025 BY COMMONWEALTH ENGINEERS, INC. ALL RIGHTS RESERVED. REPRODUCTION BY ANY METHOD IN WHOLE OR IN PART WITHOUT PERMISSION IS PROHIBITED

Know what's below. Call before you dig.
1-800-382-5544 (ITS THE LAW)

No.	Submittal / Revision	By	Date

Designed By:	Drawn By:	Checked By:
BW	BW/CH/EK	JH
Issue Date: 8/2025	Project No: S21082	Scale: AS SHOWN

STRUCTURE DETAILS - STR. #105

Drawing No:
SS6
Sheet: 48 OF 137

File: Z:\SHARED\IN CLIENTS A-L\KOKOMO\S21082 NORTH SIDE INTERCEPTOR DESIGN\06 CAD\A CURRENT FILES\1 DRAWINGS\06 - S21082 - STRUCTURE DETAILS.DWG
Saved: 8/11/2025 8:51:17 AM Plotted: 8/11/2025 8:56:45 AM Current User: Bryce Persinger LastSavedBy: bwaterman

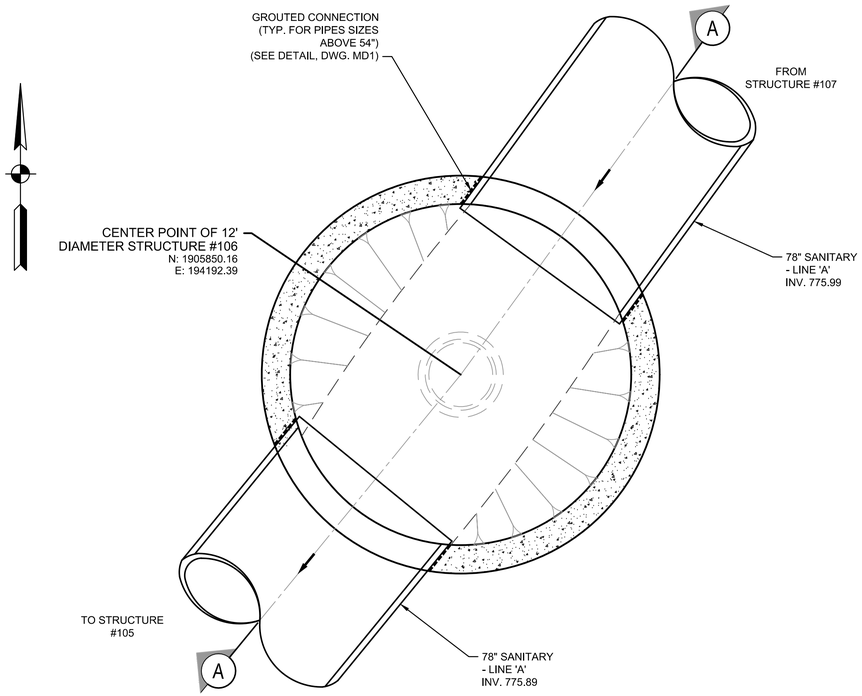

PROP. PLAN VIEW
(SEE DWG. PP3)

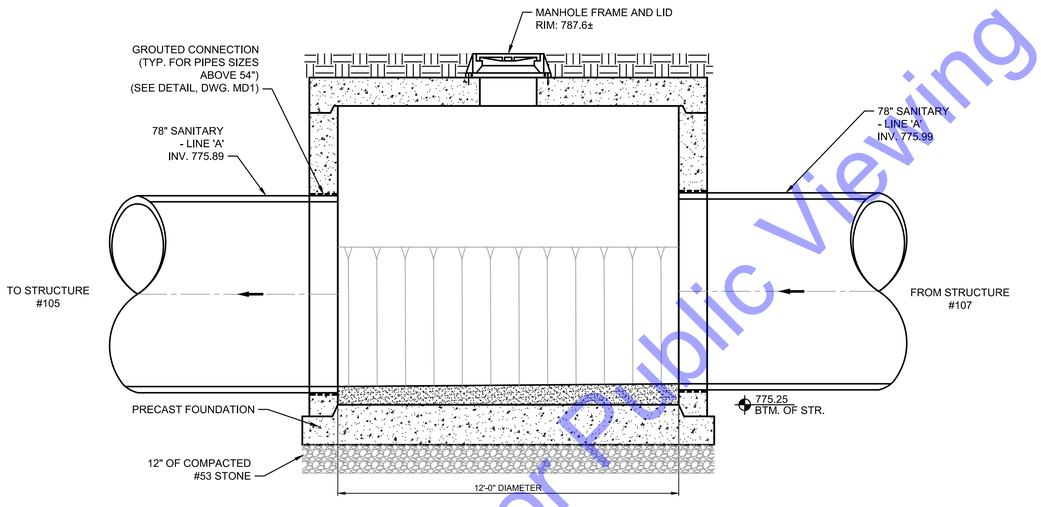

SECTION A

12' DIAMETER STRUCTURE #106

SCALE: 3/8"=1'-0"

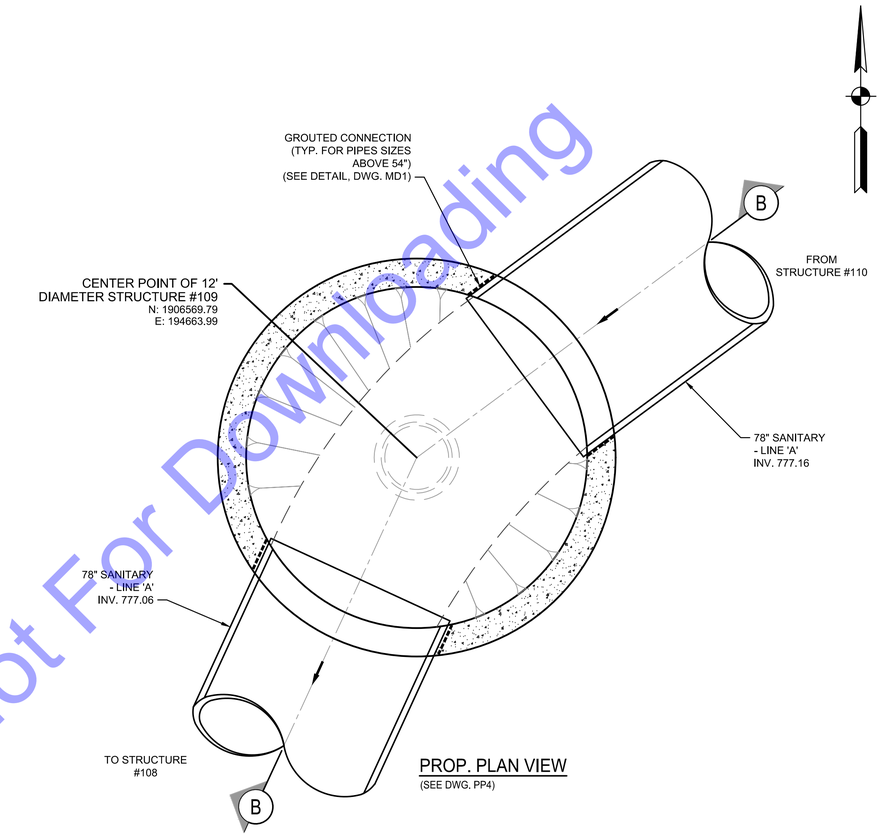

PROP. PLAN VIEW
(SEE DWG. PP4)

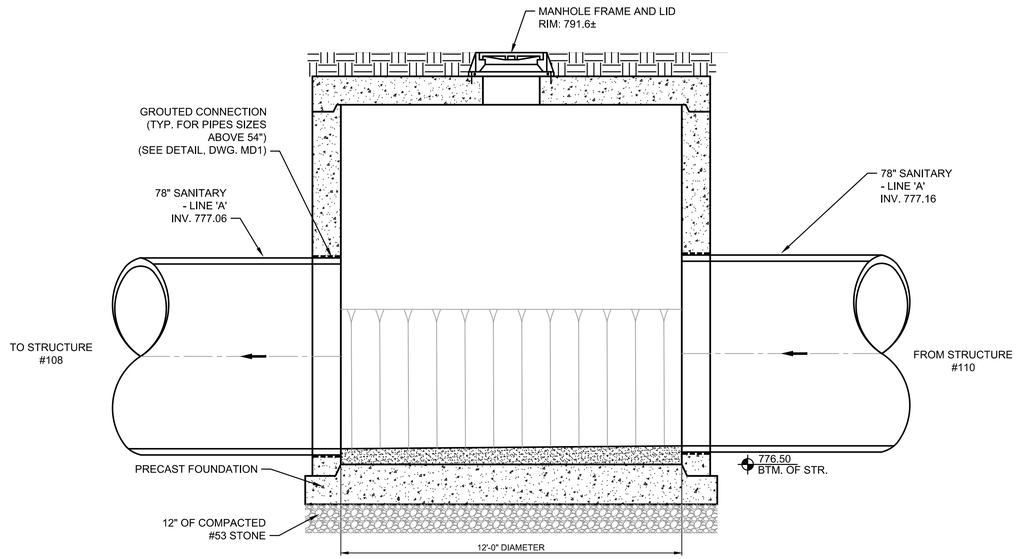

SECTION B

12' DIAMETER STRUCTURE #109

SCALE: 3/8"=1'-0"

THE CONTRACTOR SHALL EXTEND STRUCTURE BASE OR USE ANTI-FLOATATION METHODS TO MEET BUOYANCY REQUIREMENTS (SEE SPECIFICATIONS).

For Public Viewing Only-Not For Downloading

COMMONWEALTH ENGINEERS, INC.
A wealth of resources to master a common goal.
https://commonwealthengineers.com/

BRIAN KREED WILSON
REGISTERED
No. PE11900866
STATE OF
INDIANA
PROFESSIONAL ENGINEER

Brian Wilson 8/15/2025
Signature Date

CITY OF KOKOMO, INDIANA
HOWARD COUNTY

NORTH SIDE INTERCEPTOR
IMPROVEMENTS PROJECT

© 2025 BY COMMONWEALTH ENGINEERS, INC. ALL RIGHTS RESERVED. REPRODUCTION BY ANY METHOD IN WHOLE OR IN PART WITHOUT PERMISSION IS PROHIBITED

Know what's below. Call before you dig.
1-800-382-5544 (ITS THE LAW)

No.	Submittal / Revision	By	Date

Designed By:	Drawn By:	Checked By:
BW	BW/CH/EK	JH
Issue Date:	Project No:	Scale:
8/2025	S21082	AS SHOWN

STRUCTURE DETAILS -
STR. #106 AND #109

Drawing No:
SS7
Sheet: 49 OF 137

File: Z:\SHARED\IN CLIENTS A-L\KOKOMO\S21082 NORTH SIDE INTERCEPTOR DESIGN\06 CAD\A CURRENT FILES\1 DRAWINGS\06 - S21082 - STRUCTURE DETAILS.DWG
Saved: 8/11/2025 8:51:17 AM Plotted: 8/11/2025 8:56:47 AM Current User: Bryce Persinger LastSavedBy: bwaterman

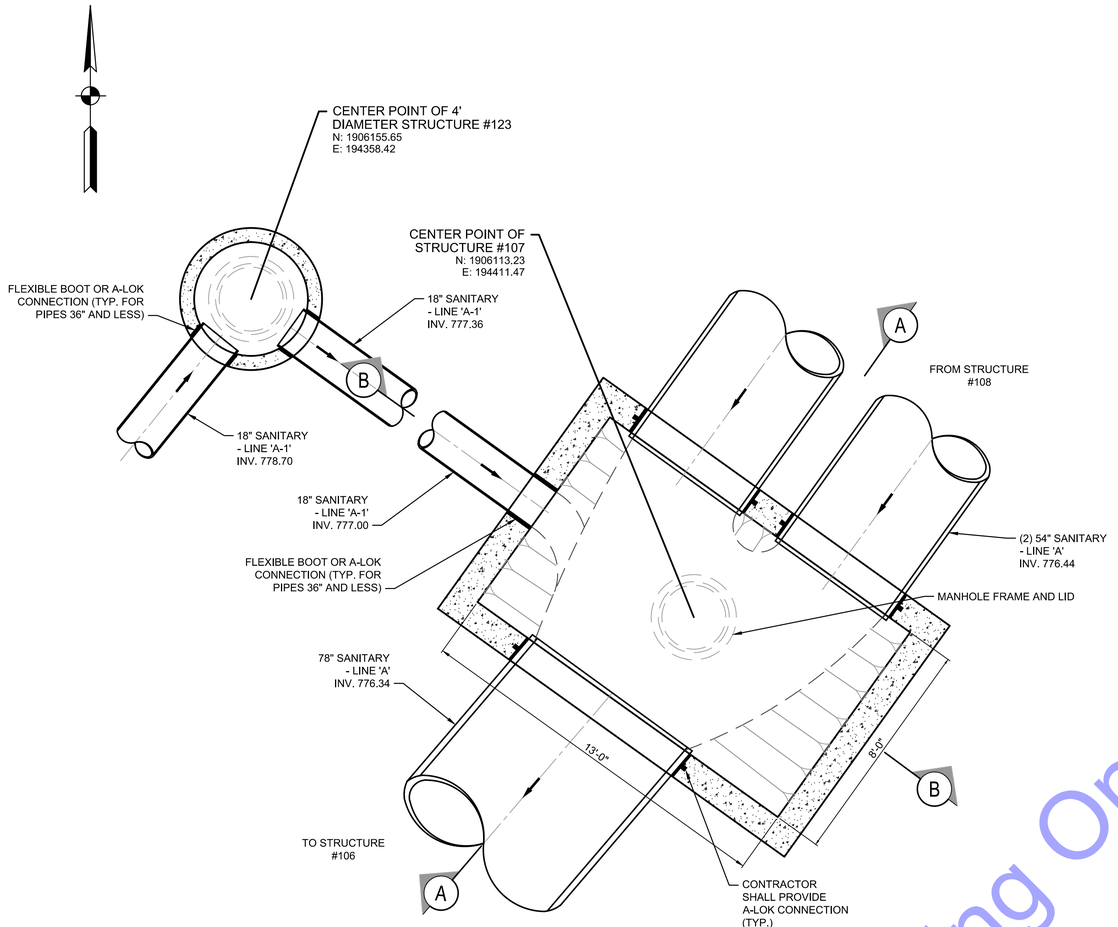

PROP. PLAN VIEW
(SEE DWG. PP3)

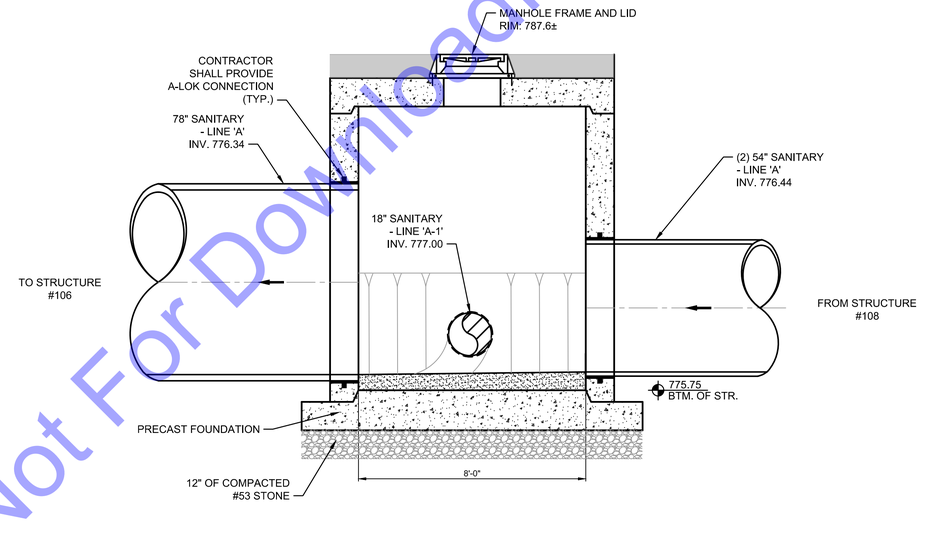

SECTION A

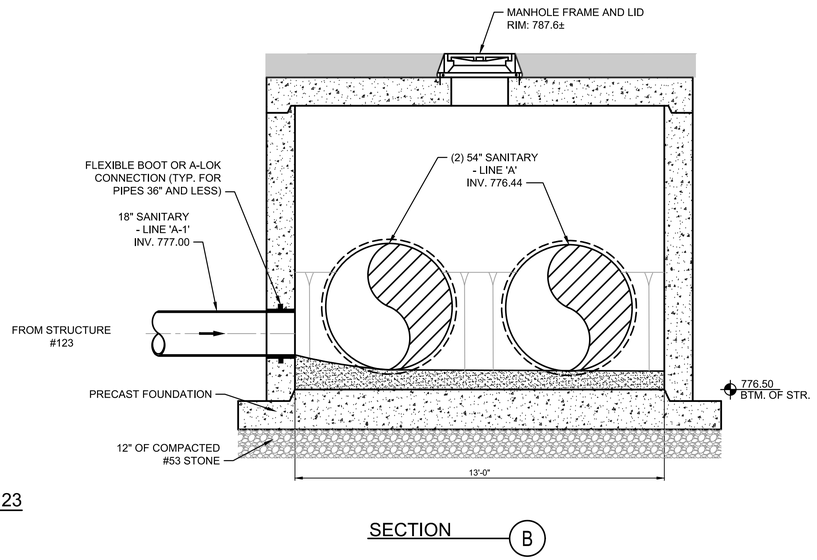

SECTION B

SPECIAL STRUCTURE #107
AND 4' DIAMETER STRUCTURE #123
SCALE: 3/8"=1'-0"
(SEE STRUCTURAL DRAWINGS, S4-1)

THE CONTRACTOR SHALL EXTEND STRUCTURE BASE OR USE ANTI-FLOATATION METHODS TO MEET BUOYANCY REQUIREMENTS (SEE SPECIFICATIONS).

For Public Viewing Only-Not For Downloading

COMMONWEALTH ENGINEERS, INC.
A wealth of resources to master a common goal.
https://commonwealthengineers.com/

BRIAN KREED WILSON
REGISTERED
No. PE11900866
STATE OF INDIANA
PROFESSIONAL ENGINEER
Brian Wilson
Signature
8/15/2025
Date

CITY OF KOKOMO, INDIANA
HOWARD COUNTY

NORTH SIDE INTERCEPTOR
IMPROVEMENTS PROJECT

© 2025 BY COMMONWEALTH ENGINEERS, INC. ALL RIGHTS RESERVED. REPRODUCTION BY ANY METHOD IN WHOLE OR IN PART WITHOUT PERMISSION IS PROHIBITED

Indiana 811 Know what's below. Call before you dig.
Know what's below. 811 before you dig.
1-800-382-5544
(ITS THE LAW)

No.	Submittal Revision	By	Date

Designed By:	Drawn By:	Checked By:
BW	BW/CH/EK	JH
Issue Date: 8/2025	Project No: S21082	Scale: AS SHOWN

STRUCTURE DETAILS - STR. #107 AND #123

Drawing No:
SS8
Sheet: 50 OF 137

File: Z:\SHARED\IN CLIENTS A-L\KOKOMO\S21082 NORTH SIDE INTERCEPTOR DESIGN\06 CAD\A CURRENT FILES\1 DRAWINGS\06 - S21082 - STRUCTURE DETAILS.DWG
Saved: 8/11/2025 8:51:17 AM Plotted: 8/11/2025 8:56:48 AM Current User: Bryce Persinger LastSavedBy: bwaterman

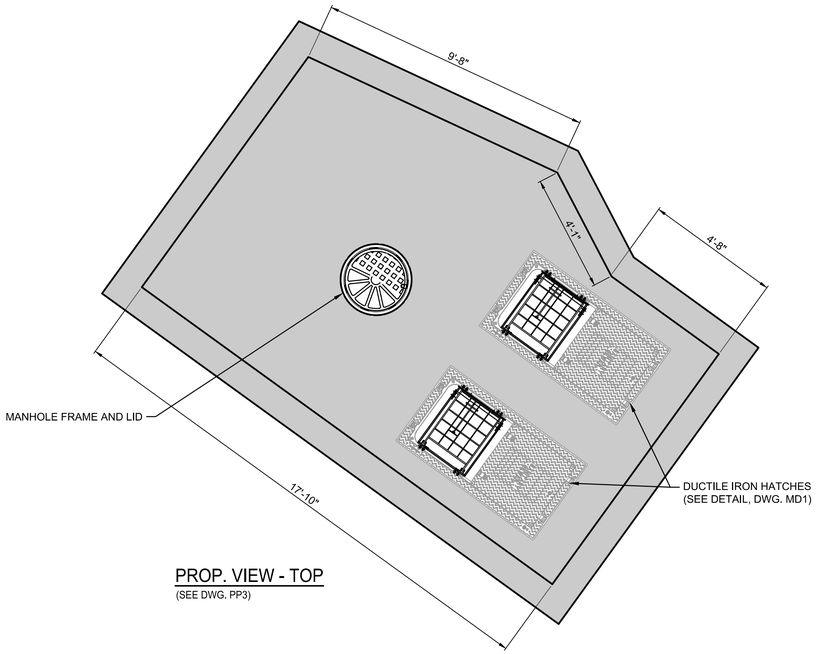

PROP. VIEW - TOP
(SEE DWG. PP3)

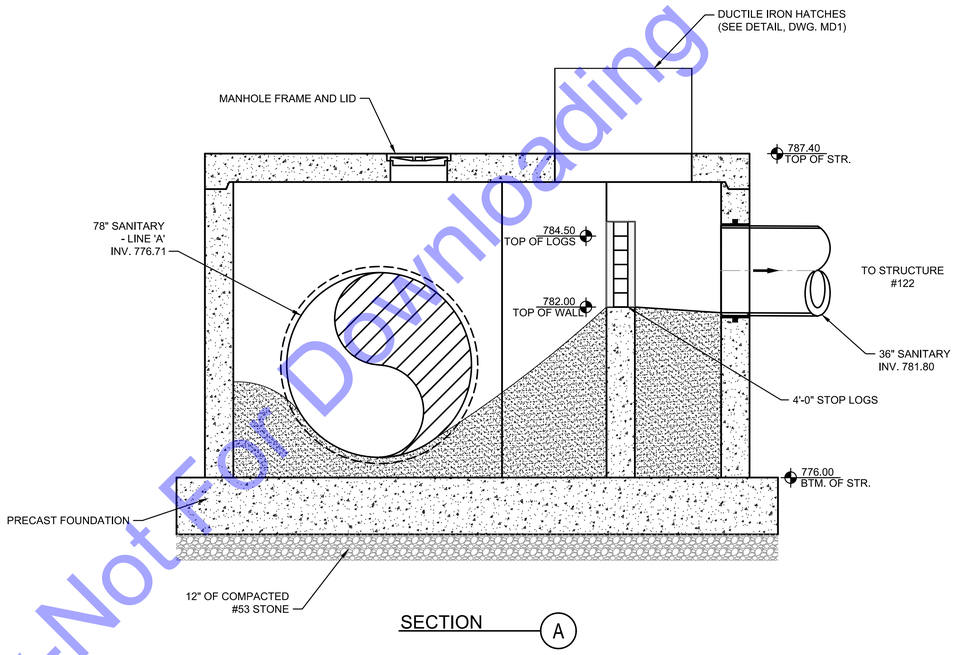

SECTION A

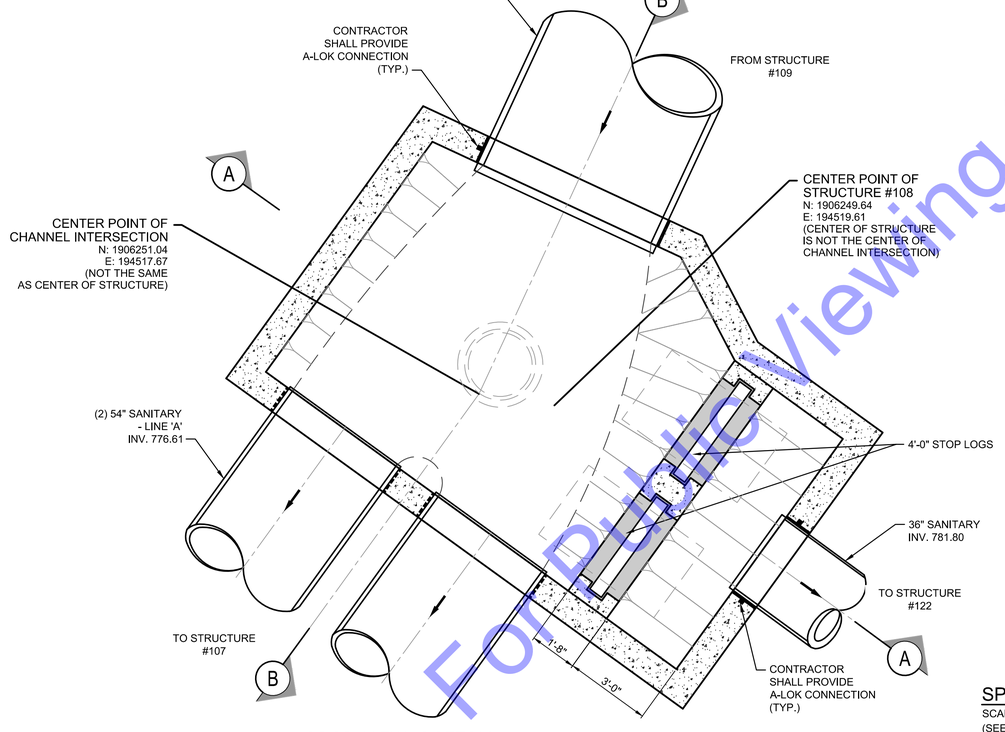

PROP. VIEW - BOTTOM
(SEE DWG. PP3)

SPECIAL STRUCTURE #108
SCALE: 3/8"=1'-0"
(SEE STRUCTURAL DRAWINGS, S5-1)

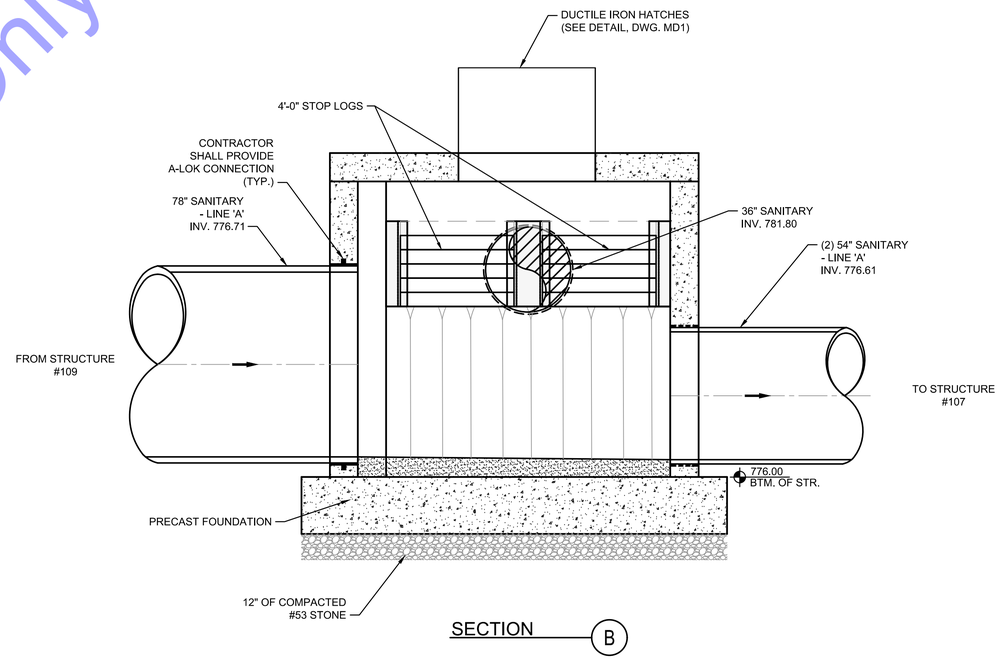

SECTION B

THE CONTRACTOR SHALL EXTEND STRUCTURE BASE OR USE ANTI-FLOATATION METHODS TO MEET BUOYANCY REQUIREMENTS (SEE SPECIFICATIONS).

For Public Viewing Only-Not For Downloading

COMMONWEALTH ENGINEERS, INC.
A wealth of resources to master a common goal.
https://commonwealthengineers.com/

BRIAN KREED WILSON
REGISTERED
No. PE11900866
STATE OF
INDIANA
PROFESSIONAL ENGINEER
Brian Wilson 8/15/2025
Signature Date

CITY OF KOKOMO, INDIANA
HOWARD COUNTY

NORTH SIDE INTERCEPTOR
IMPROVEMENTS PROJECT

© 2025 BY COMMONWEALTH ENGINEERS, INC. ALL RIGHTS RESERVED. REPRODUCTION BY ANY METHOD IN WHOLE OR IN PART WITHOUT PERMISSION IS PROHIBITED

Indiana811
Know what's below. Call before you dig.
Know what's below. 811 before you dig.
1-800-382-5544
(ITS THE LAW)

No.	Submittal / Revision	By	Date

Designed By:	Drawn By:	Checked By:
BW	BW/CH/EK	JH
Issue Date: 8/2025	Project No: S21082	Scale: AS SHOWN

STRUCTURE DETAILS - STR. #108

Drawing No:
SS9
Sheet: 51 OF 137

File: Z:\SHARED\IN CLIENTS A-L\KOKOMO\S21082 NORTH SIDE INTERCEPTOR DESIGN\06 CAD\A CURRENT FILES\1 DRAWINGS\06 - S21082 - STRUCTURE DETAILS.DWG
Saved: 8/15/2025 1:38:37 PM Plotted: 8/18/2025 8:38:32 AM Current User: Brian Waterman LastSavedBy: bwaterman

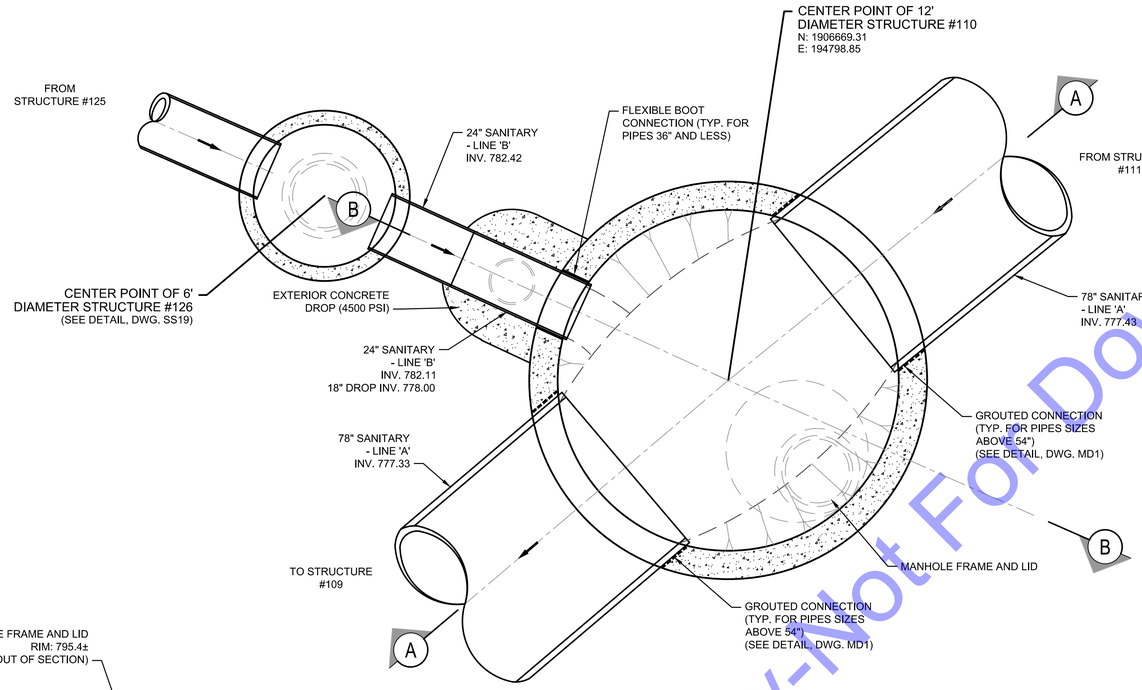

PROP. PLAN VIEW
(SEE DWG. PP4)

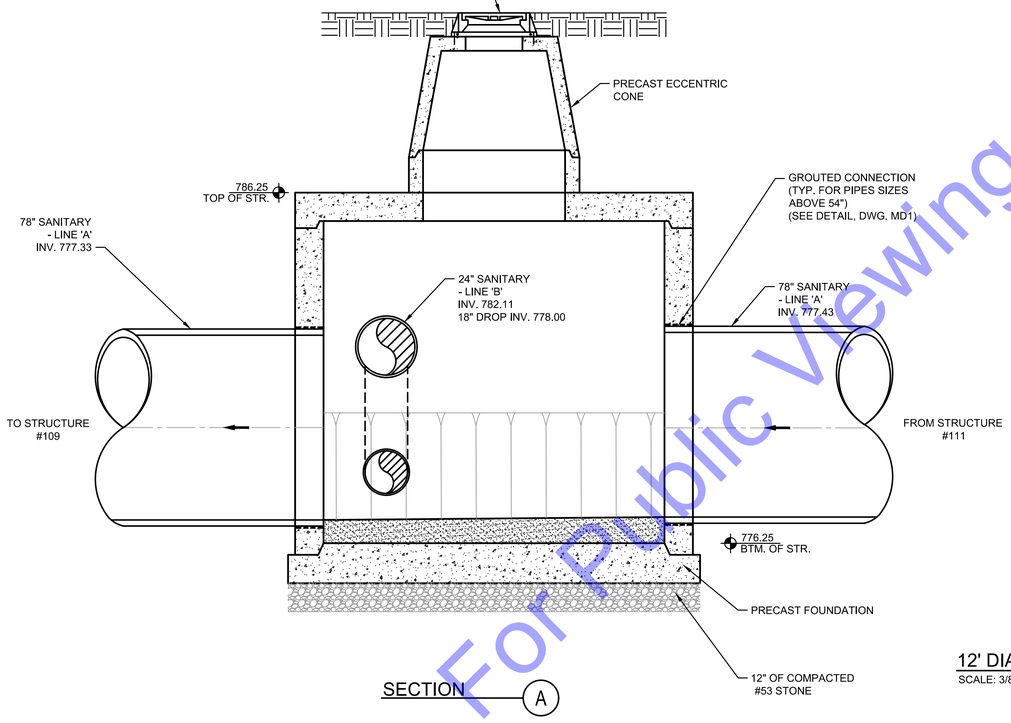

SECTION A

12' DIAMETER STRUCTURE #110
SCALE: 3/8"=1'-0"

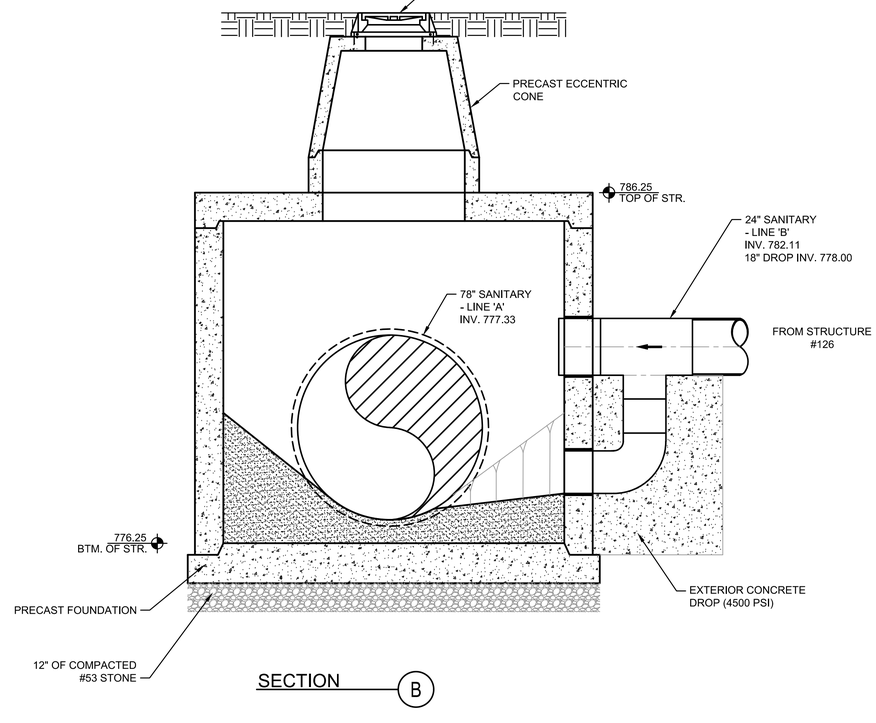

SECTION B

THE CONTRACTOR SHALL EXTEND STRUCTURE BASE OR USE ANTI-FLOATATION METHODS TO MEET BUOYANCY REQUIREMENTS (SEE SPECIFICATIONS).

For Public Viewing Only-Not For Downloading

COMMONWEALTH ENGINEERS, INC.
A wealth of resources to master a common goal.
https://commonwealthengineers.com/

BRIAN KREED WILSON
REGISTERED
No. PE11900866
STATE OF
INDIANA
PROFESSIONAL ENGINEER
Brian Wilson
Signature
8/15/2025
Date

CITY OF KOKOMO, INDIANA
HOWARD COUNTY

NORTH SIDE INTERCEPTOR
IMPROVEMENTS PROJECT

© 2025 BY COMMONWEALTH ENGINEERS, INC. ALL RIGHTS RESERVED. REPRODUCTION BY ANY METHOD IN WHOLE OR IN PART WITHOUT PERMISSION IS PROHIBITED

Know what's below. Call before you dig.
Know what's below. 811 before you dig.
1-800-382-5544
(ITS THE LAW)

No.	Submittal Revision	By	Date

Designed By:	Drawn By:	Checked By:
BW	BW/CH/EK	JH
Issue Date:	Project No:	Scale:
8/2025	S21082	AS SHOWN

STRUCTURE DETAILS - STR. #110

Drawing No:
SS10
Sheet: 52 OF 137

File: Z:\SHARED\IN CLIENTS A-L\KOKOMO\S21082 NORTH SIDE INTERCEPTOR DESIGN\06 CAD\A CURRENT FILES\1 DRAWINGS\06 - S21082 - STRUCTURE DETAILS.DWG
Saved: 8/12/2025 4:52:35 PM Plotted: 8/13/2025 10:47:27 AM Current User: Brian Waterman LastSavedBy: bwaterman

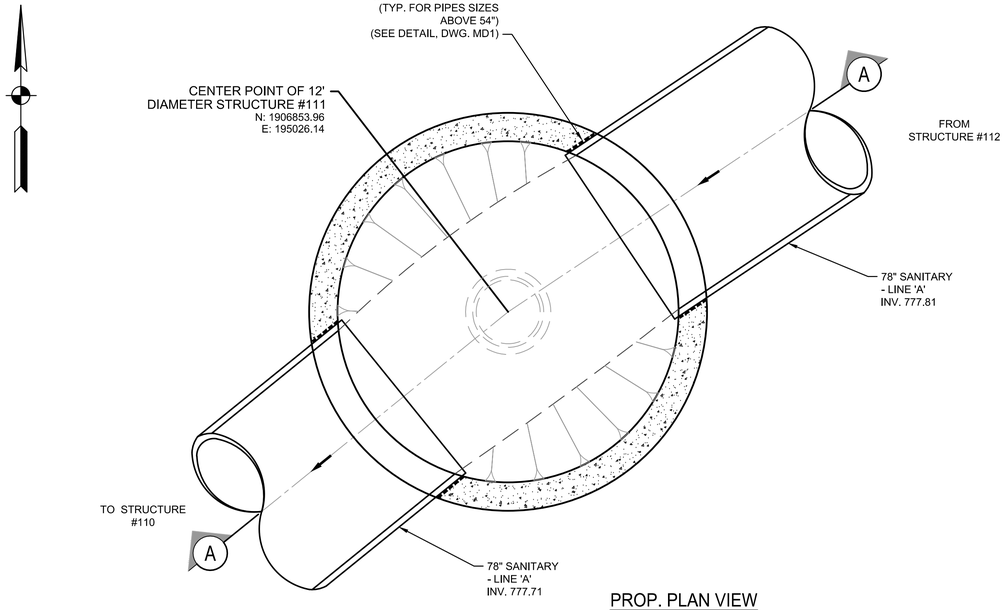

PROP. PLAN VIEW
(SEE DWG. PP5)

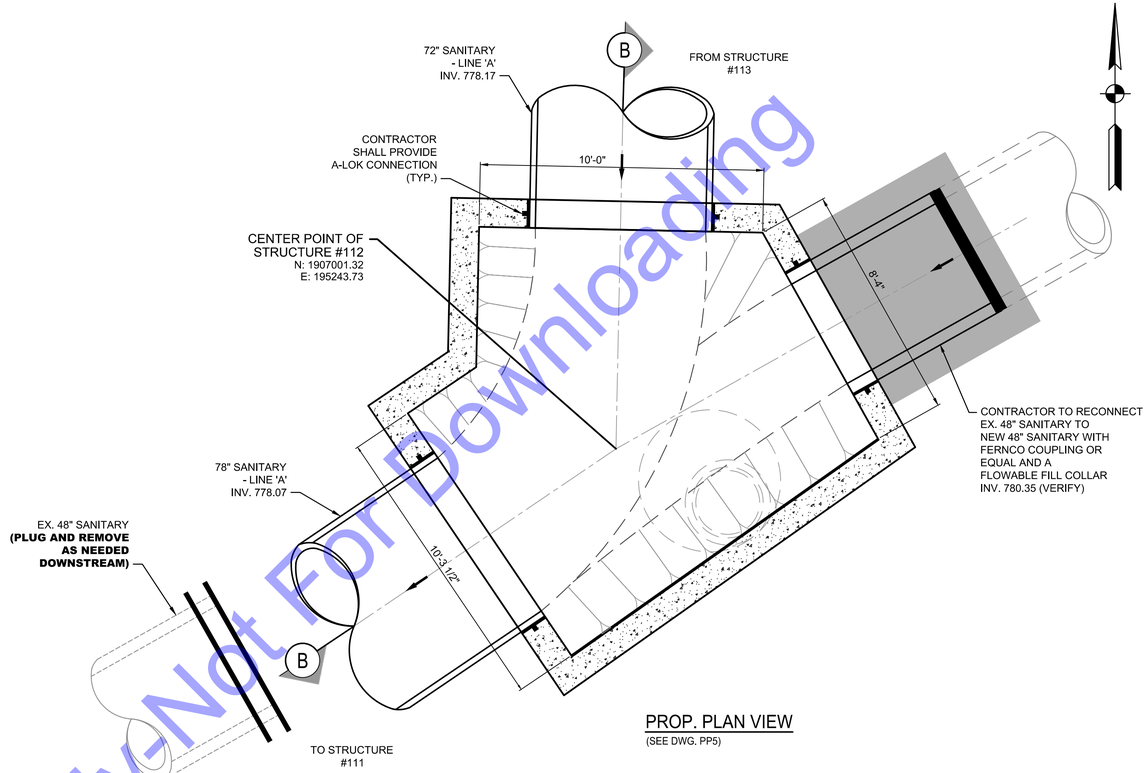

PROP. PLAN VIEW
(SEE DWG. PP5)

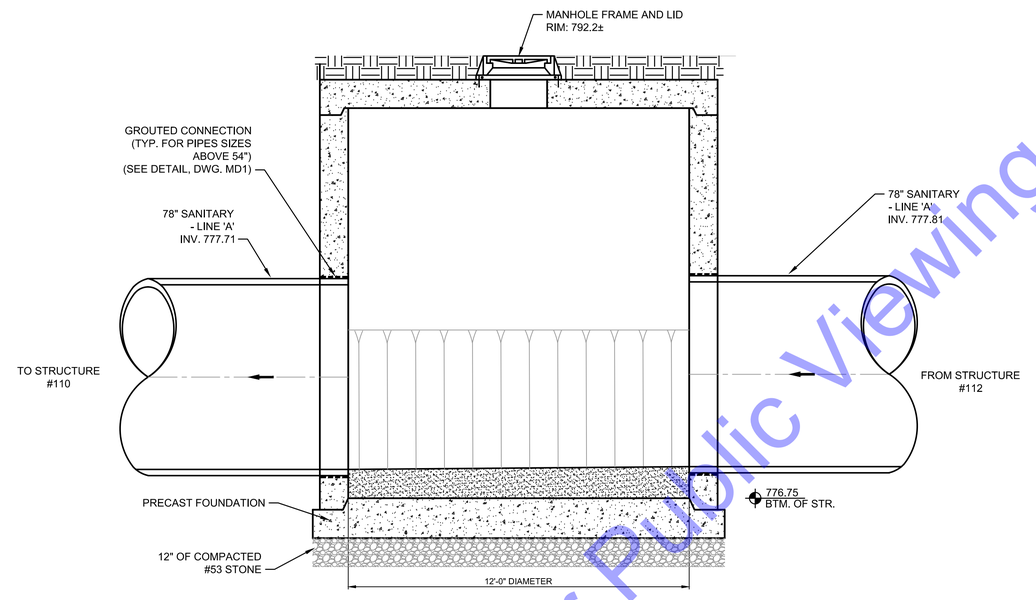

SECTION A

12' DIAMETER STRUCTURE #111
SCALE: 3/8"=1'-0"

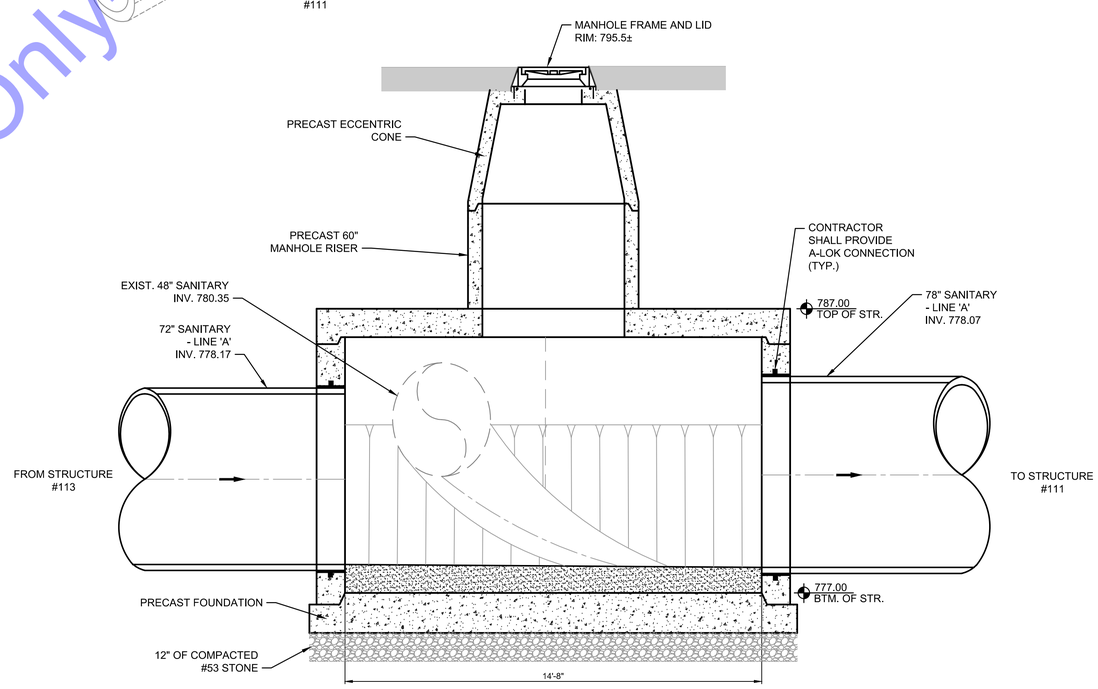

SECTION B

SPECIAL STRUCTURE #112
SCALE: 3/8"=1'-0"
(SEE STRUCTURAL DRAWINGS, S2-1)

THE CONTRACTOR SHALL EXTEND STRUCTURE BASE OR USE ANTI-FLOATATION METHODS TO MEET BUOYANCY REQUIREMENTS (SEE SPECIFICATIONS).

For Public Viewing Only-Not For Downloading

COMMONWEALTH ENGINEERS, INC.
A wealth of resources to master a common goal.
https://commonwealthengineers.com/

BRIAN KREED WILSON
REGISTERED
No. PE11900866
STATE OF
INDIANA
PROFESSIONAL ENGINEER
Brian Wilson
Signature
8/15/2025
Date

CITY OF KOKOMO, INDIANA
HOWARD COUNTY

NORTH SIDE INTERCEPTOR
IMPROVEMENTS PROJECT

© 2025 BY COMMONWEALTH ENGINEERS, INC. ALL RIGHTS RESERVED. REPRODUCTION BY ANY METHOD IN WHOLE OR IN PART WITHOUT PERMISSION IS PROHIBITED

Indiana 811 Know what's below. Call before you dig.
Know what's below. 811 before you dig.
1-800-382-5544
(ITS THE LAW)

No.	Submittal / Revision	By	Date

Designed By:	Drawn By:	Checked By:
BW	BW/CH/EK	JH
Issue Date:	Project No:	Scale:
8/2025	S21082	AS SHOWN

STRUCTURE DETAILS -
STR. #111 AND #112

Drawing No:
SS11
Sheet: 53 OF 137

File: Z:\SHARED\IN CLIENTS A-L\KOKOMO\S21082 NORTH SIDE INTERCEPTOR DESIGN\06 CAD\A CURRENT FILES\1 DRAWINGS\06 - S21082 - STRUCTURE DETAILS.DWG
Saved: 8/18/2025 4:19:14 PM Plotted: 8/18/2025 4:25:29 PM Current User: Brian Waterman LastSavedBy: bwaterman

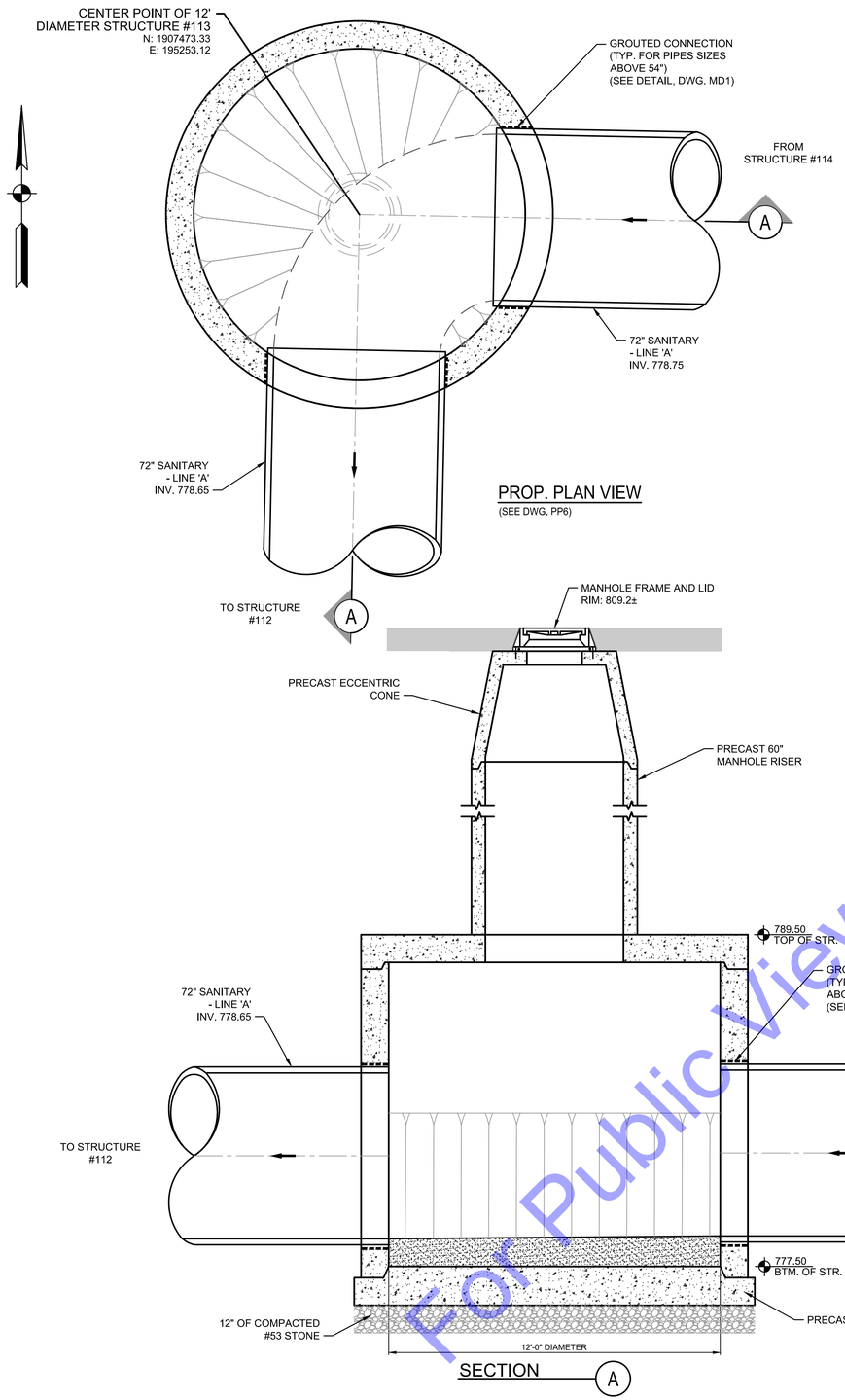

12' DIAMETER STRUCTURE #113

SCALE: 3/8"=1'-0"

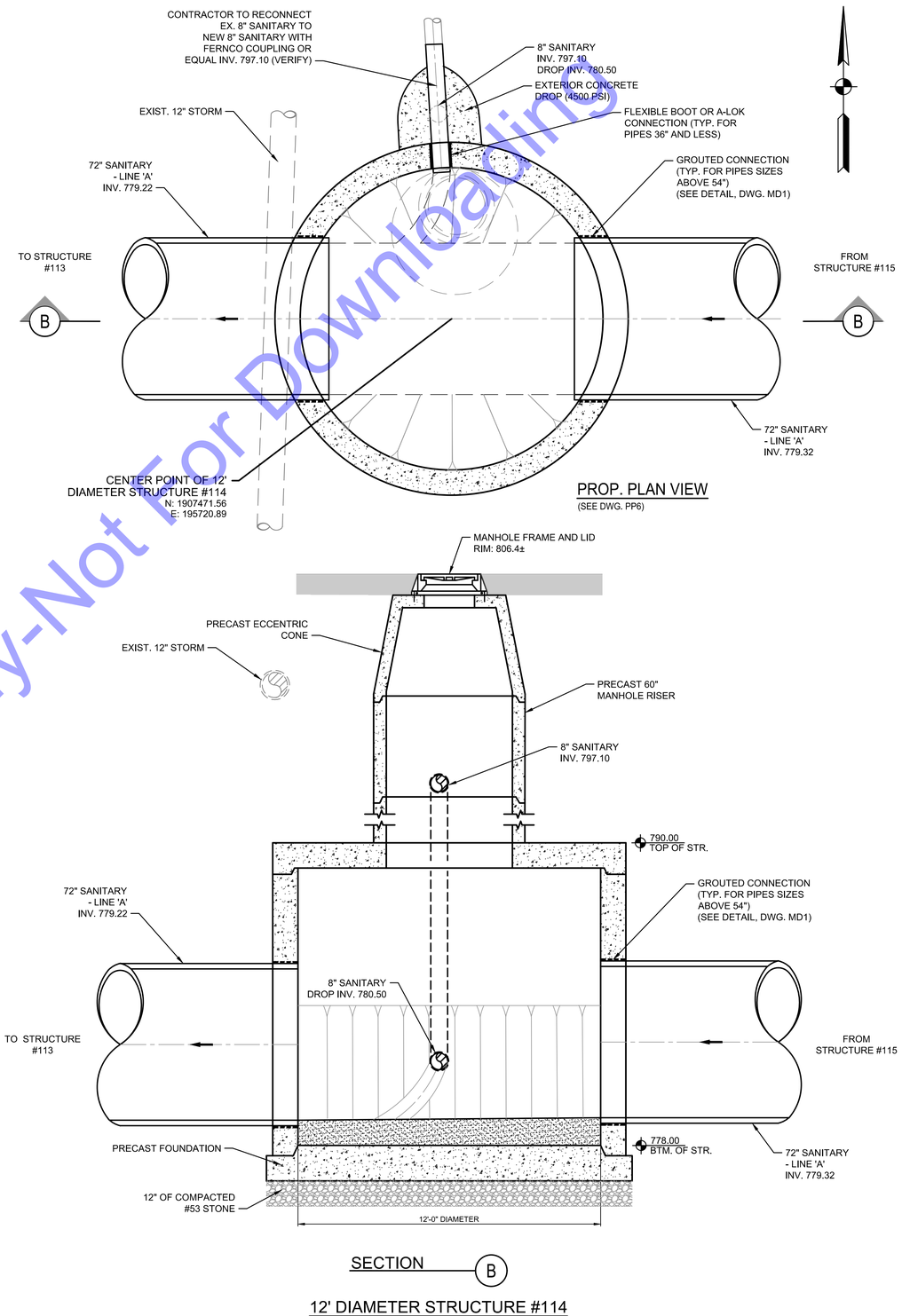

12' DIAMETER STRUCTURE #114

SCALE: 3/8"=1'-0"

THE CONTRACTOR SHALL EXTEND STRUCTURE BASE OR USE ANTI-FLOATATION METHODS TO MEET BUOYANCY REQUIREMENTS (SEE SPECIFICATIONS).

For Public Viewing Only-Not For Downloading

COMMONWEALTH ENGINEERS, INC.
A wealth of resources to master a common goal.
https://commonwealthengineers.com/

BRIAN KREED WILSON
REGISTERED
No. PE11900866
STATE OF INDIANA
PROFESSIONAL ENGINEER

Signature Brian Wilson Date 8/15/2025

CITY OF KOKOMO, INDIANA
HOWARD COUNTY

NORTH SIDE INTERCEPTOR IMPROVEMENTS PROJECT

© 2025 BY COMMONWEALTH ENGINEERS, INC. ALL RIGHTS RESERVED. REPRODUCTION BY ANY METHOD IN WHOLE OR IN PART WITHOUT PERMISSION IS PROHIBITED

Indiana 811 Know what's below. Call before you dig.
Know what's below. 811 before you dig.
1-800-382-5544 (ITS THE LAW)

No.	Submittal Revision	By	Date

Designed By:	Drawn By:	Checked By:
BW	BW/CH/EK	JH
Issue Date:	Project No:	Scale:
8/2025	S21082	AS SHOWN

STRUCTURE DETAILS - STR. #113 AND #114

Drawing No:
SS12
Sheet: 54 OF 137

File: Z:\SHARED\IN CLIENTS A-L\KOKOMO\S21082 NORTH SIDE INTERCEPTOR DESIGN\06 CAD\A CURRENT FILES\1 DRAWINGS\06 - S21082 - STRUCTURE DETAILS.DWG
Saved: 8/12/2025 4:52:35 PM Plotted: 8/13/2025 10:47:30 AM Current User: Brian Waterman LastSavedBy: bwaterman

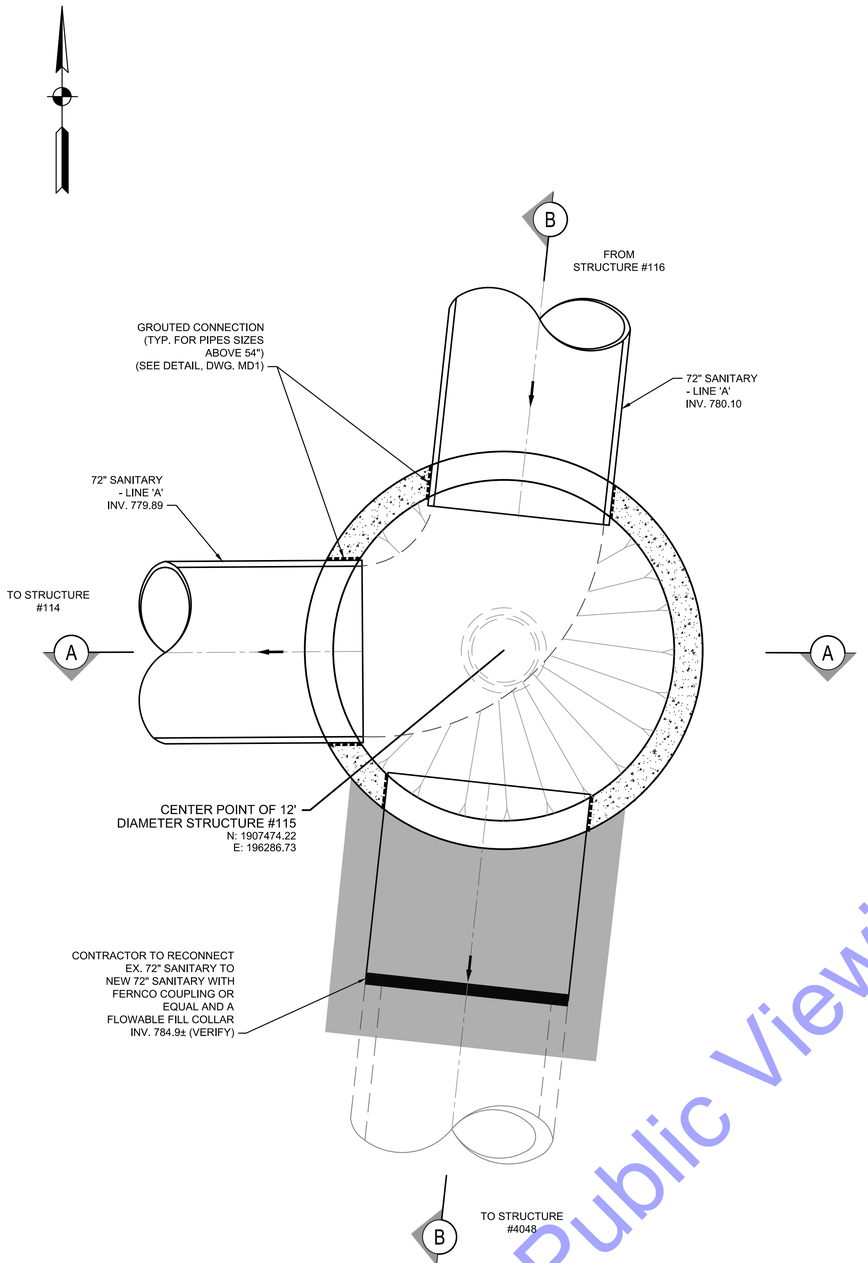

PROP. PLAN VIEW
(SEE DWG. PP7)

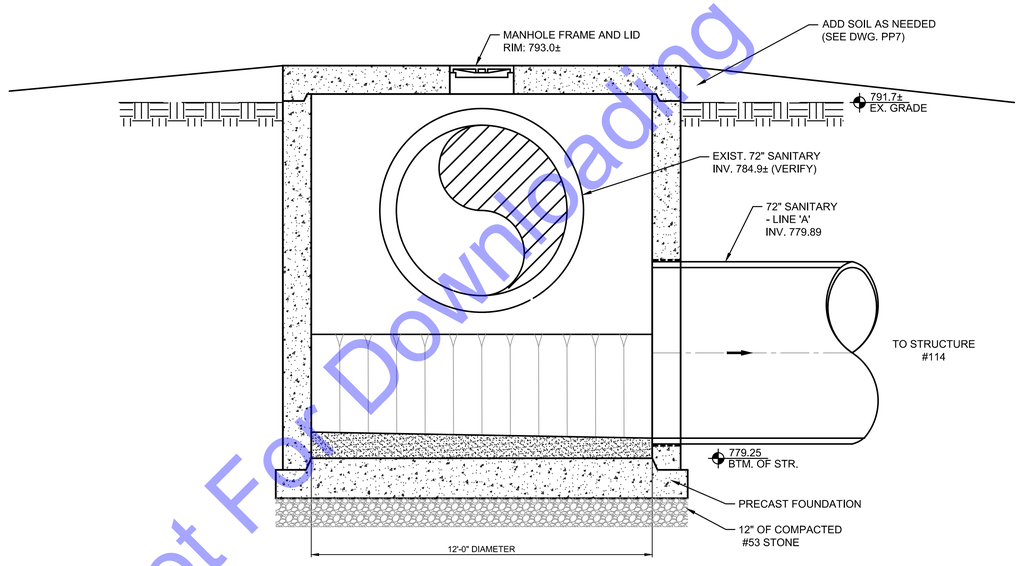

SECTION A

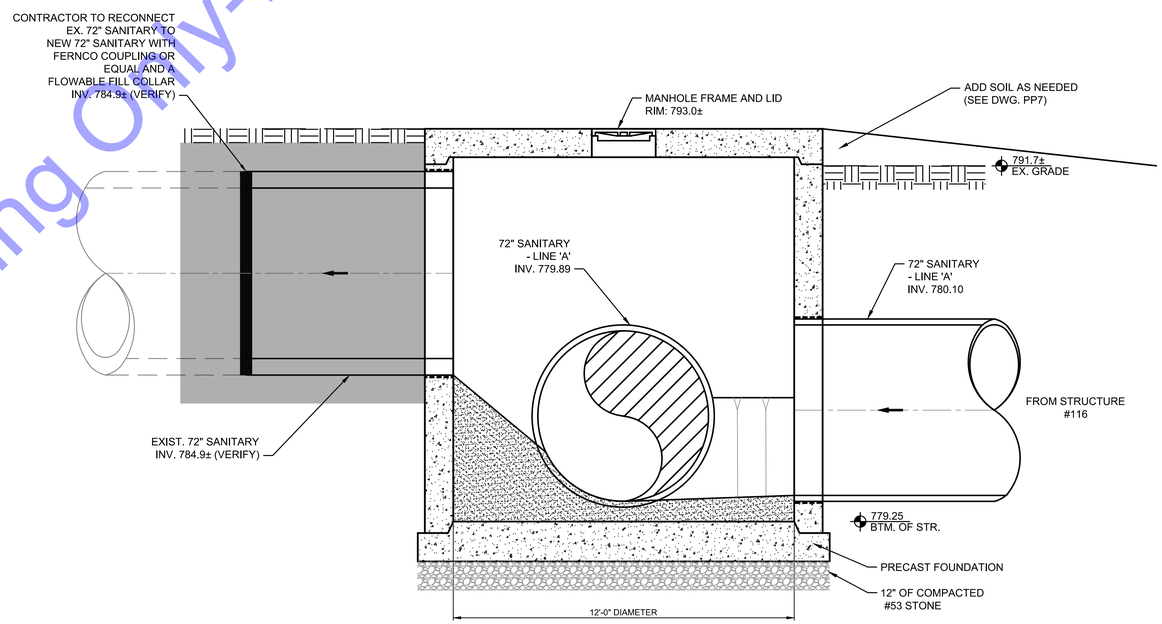

SECTION B

12' DIAMETER STRUCTURE #115
SCALE: 3/8"=1'-0"

THE CONTRACTOR SHALL EXTEND STRUCTURE BASE OR USE ANTI-FLOATATION METHODS TO MEET BUOYANCY REQUIREMENTS (SEE SPECIFICATIONS).

For Public Viewing Only-Not For Downloading

COMMONWEALTH ENGINEERS, INC.
A wealth of resources to master a common goal.
https://commonwealthengineers.com/

BRIAN KREED WILSON
REGISTERED
No. PE11900866
STATE OF INDIANA
PROFESSIONAL ENGINEER
Brian Wilson
Signature
8/15/2025
Date

CITY OF KOKOMO, INDIANA
HOWARD COUNTY

NORTH SIDE INTERCEPTOR
IMPROVEMENTS PROJECT

© 2025 BY COMMONWEALTH ENGINEERS, INC. ALL RIGHTS RESERVED. REPRODUCTION BY ANY METHOD IN WHOLE OR IN PART WITHOUT PERMISSION IS PROHIBITED

Indiana811 Know what's below. Call before you dig.
Know what's below. 811 before you dig.
1-800-382-5544
(ITS THE LAW)

No.	Submittal / Revision	By	Date

Designed By:	Drawn By:	Checked By:
BW	BW/CH/EK	JH
Issue Date: 8/2025	Project No: S21082	Scale: AS SHOWN

STRUCTURE DETAILS - STR. #115

Drawing No:
SS13
Sheet: 55 OF 137

File: Z:\SHARED\IN CLIENTS A-L\KOKOMO\S21082 NORTH SIDE INTERCEPTOR DESIGN\06 CAD\A CURRENT FILES\1 DRAWINGS\06 - S21082 - STRUCTURE DETAILS.DWG
Saved: 8/11/2025 8:51:17 AM Plotted: 8/11/2025 8:56:59 AM Current User: Bryce Persinger LastSavedBy: bwaterman

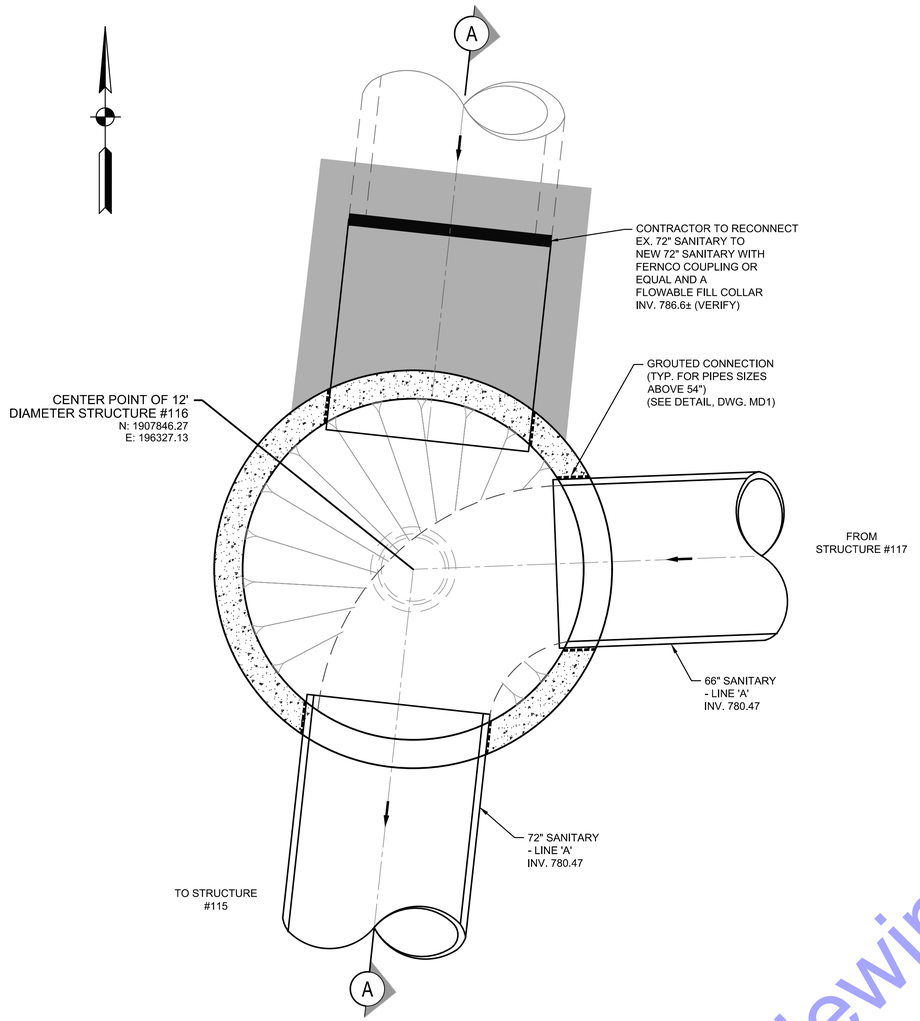

PROP. PLAN VIEW
(SEE DWG. PP8)

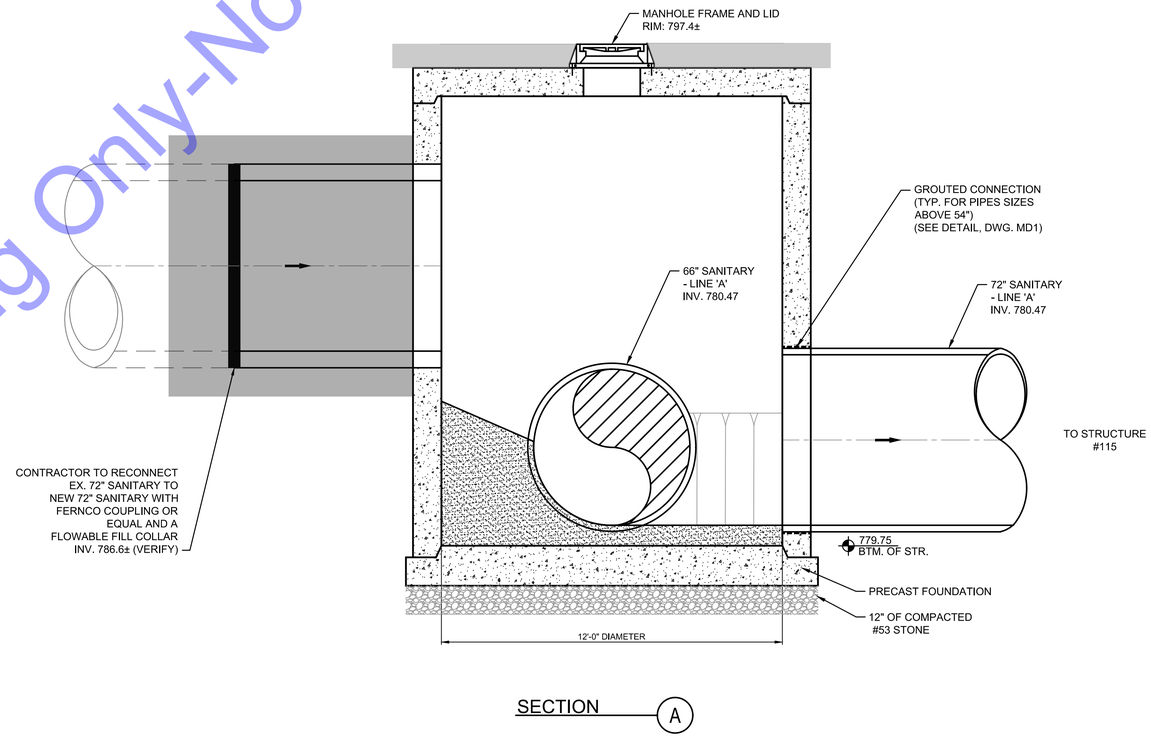

SECTION A

12' DIAMETER STRUCTURE #116
SCALE: 3/8"=1'-0"

THE CONTRACTOR SHALL EXTEND STRUCTURE BASE OR USE ANTI-FLOATATION METHODS TO MEET BUOYANCY REQUIREMENTS (SEE SPECIFICATIONS).

For Public Viewing Only-Not For Downloading

COMMONWEALTH ENGINEERS, INC.
A wealth of resources to master a common goal.
https://commonwealthengineers.com/

BRIAN KREED WILSON
REGISTERED
No. PE11900866
STATE OF INDIANA
PROFESSIONAL ENGINEER

Brian Wilson
Signature

8/15/2025
Date

CITY OF KOKOMO, INDIANA
HOWARD COUNTY

NORTH SIDE INTERCEPTOR IMPROVEMENTS PROJECT

© 2025 BY COMMONWEALTH ENGINEERS, INC. ALL RIGHTS RESERVED. REPRODUCTION BY ANY METHOD IN WHOLE OR IN PART WITHOUT PERMISSION IS PROHIBITED

Indiana 811 Know what's below. Call before you dig.
Know what's below. 811 before you dig.
1-800-382-5544 (ITS THE LAW)

No.	Submittal Revision	By:	Date

Designed By:	Drawn By:	Checked By:
BW	BW/CH/EK	JH
Issue Date:	Project No:	Scale:
8/2025	S21082	AS SHOWN

STRUCTURE DETAILS - STR. #116

Drawing No:
SS14
Sheet: 56 OF 137

File: Z:\SHARED\IN CLIENTS A-L\KOKOMO\S21082 NORTH SIDE INTERCEPTOR DESIGN\06 CAD\A CURRENT FILES\1 DRAWINGS\06 - S21082 - STRUCTURE DETAILS.DWG
Saved: 8/11/2025 8:51:17 AM Plotted: 8/11/2025 8:57:01 AM Current User: Bryce Persinger LastSavedBy: bwatterson

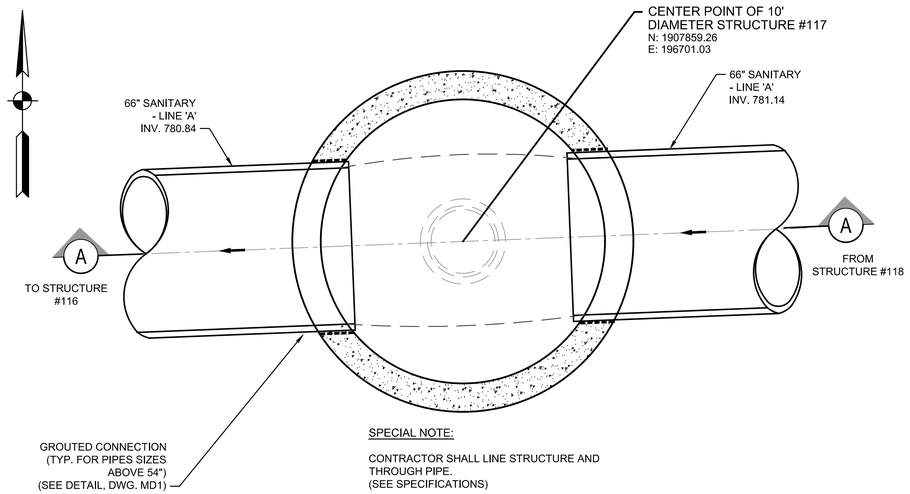

PROP. PLAN VIEW
(SEE DWG. PP9)

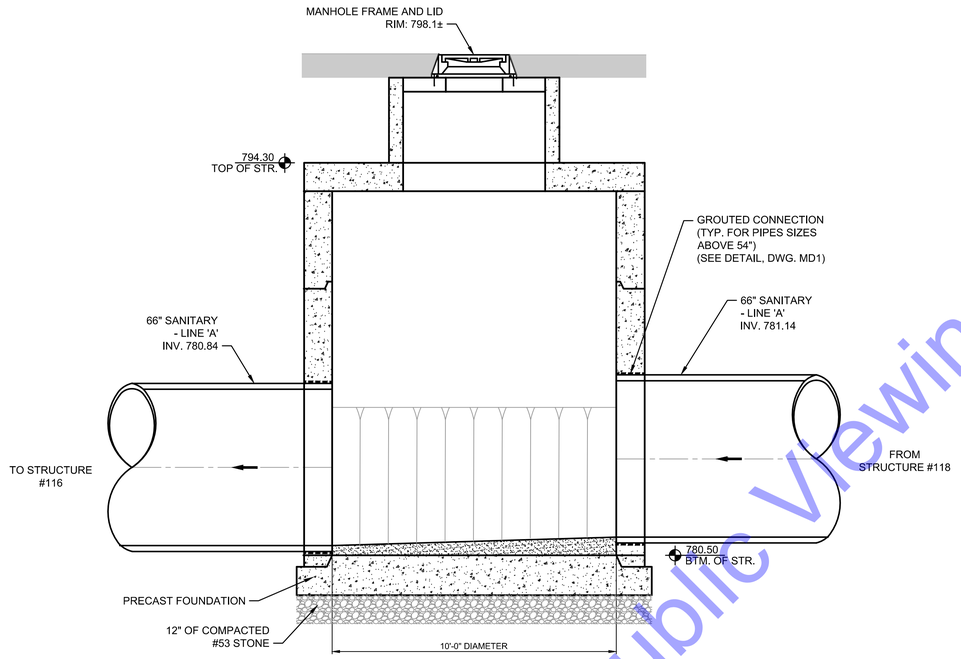

A SECTION

10' DIAMETER STRUCTURE #117
SCALE: 3/8"=1'-0"

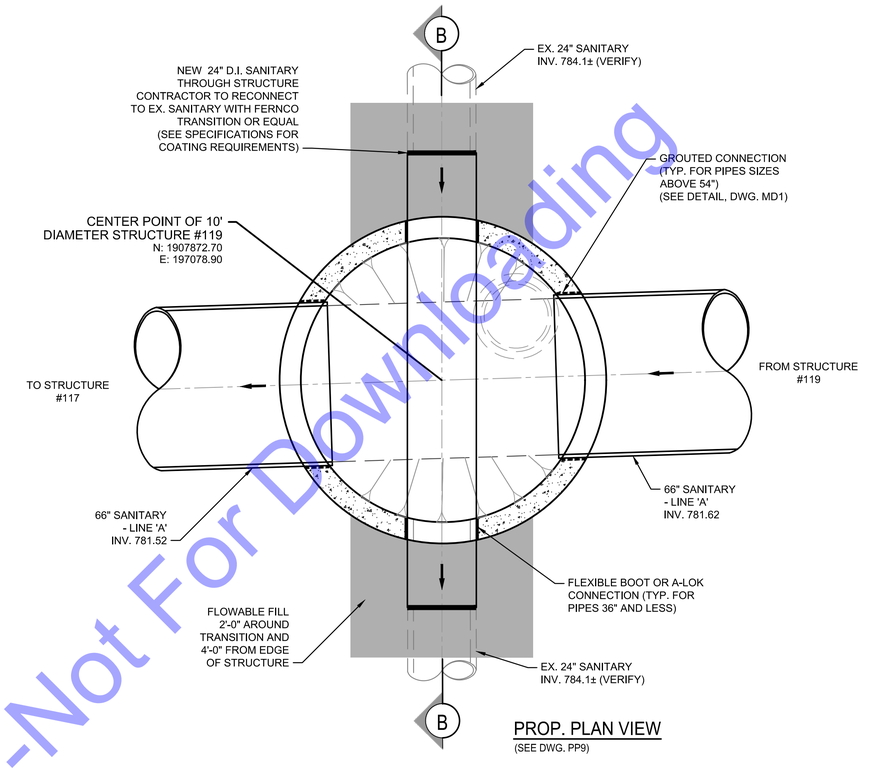

PROP. PLAN VIEW
(SEE DWG. PP9)

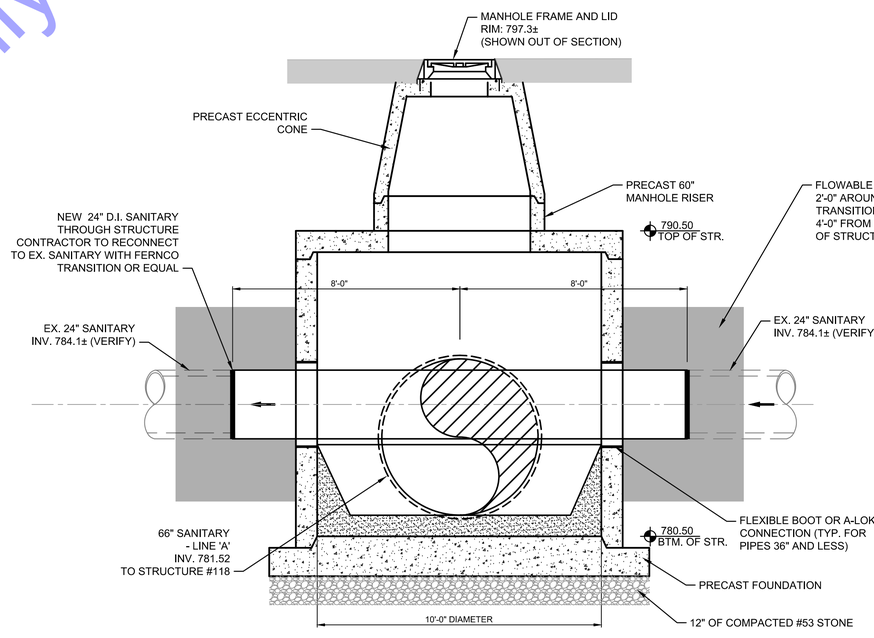

SECTION B

10' DIAMETER STRUCTURE #118
SCALE: 3/8"=1'-0"

THE CONTRACTOR SHALL EXTEND STRUCTURE BASE OR USE ANTI-FLOATATION METHODS TO MEET BUOYANCY REQUIREMENTS (SEE SPECIFICATIONS).

For Public Viewing Only-Not For Downloading

COMMONWEALTH ENGINEERS, INC.
A wealth of resources to master a common goal.
https://commonwealthengineers.com/

BRIAN KREED WILSON
REGISTERED
No. PE11900866
STATE OF INDIANA
PROFESSIONAL ENGINEER
Brian Wilson
Signature
8/15/2025
Date

CITY OF KOKOMO, INDIANA
HOWARD COUNTY

NORTH SIDE INTERCEPTOR IMPROVEMENTS PROJECT

© 2025 BY COMMONWEALTH ENGINEERS, INC. ALL RIGHTS RESERVED. REPRODUCTION BY ANY METHOD IN WHOLE OR IN PART WITHOUT PERMISSION IS PROHIBITED

Know what's below. Call before you dig. 811
Know what's below. 811 before you dig.
1-800-382-5544
(ITS THE LAW)

No.	Submittal Revision	By	Date

Designed By:	Drawn By:	Checked By:
BW	BW/CH/EK	JH
Issue Date: 8/2025	Project No: S21082	Scale: AS SHOWN

STRUCTURE DETAILS - STR. #117 & #118

Drawing No:
SS15
Sheet: 57 OF 137

File: Z:\SHARED\IN CLIENTS A-L\KOKOMO\S21082 NORTH SIDE INTERCEPTOR DESIGN\06 CAD\A CURRENT FILES\1 DRAWINGS\06 - S21082 - STRUCTURE DETAILS.DWG
Saved: 8/12/2025 4:52:35 PM Plotted: 8/13/2025 10:47:33 AM Current User: Brian Waterman LastSavedBy: bwaterman

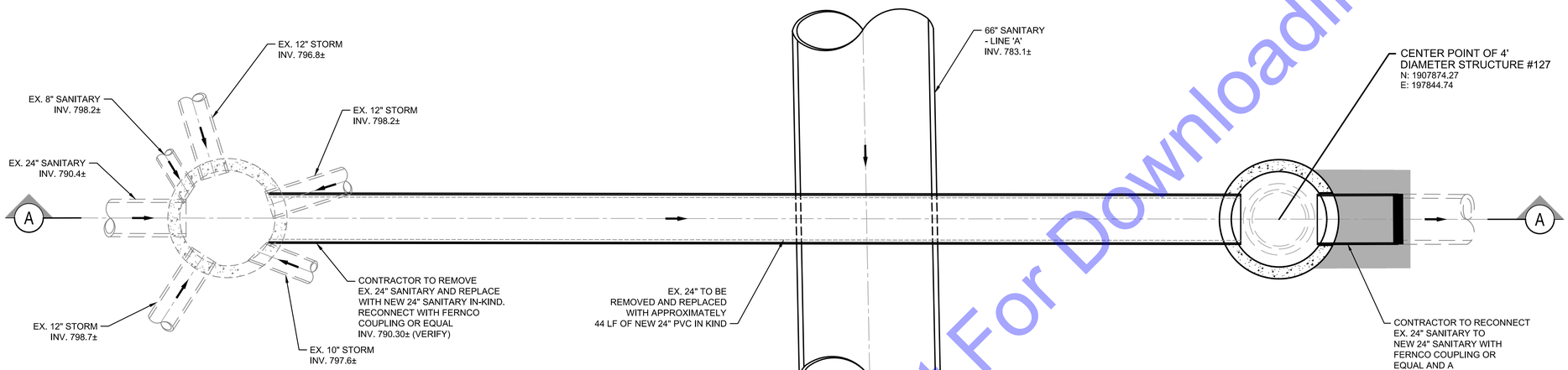

EARLY ACTION:
CONTRACTOR TO VERIFY DEPTH, MATERIAL, THICKNESS, AND NUMBER OF PIPES ENTERING EX. SAN MH 6547 AND VERIFY WHICH ARE PLUGGED AND ABANDONED AND PROVIDE TO ENGINEER/OWNER.

PROP. PLAN VIEW
(SEE DWG. PP11)

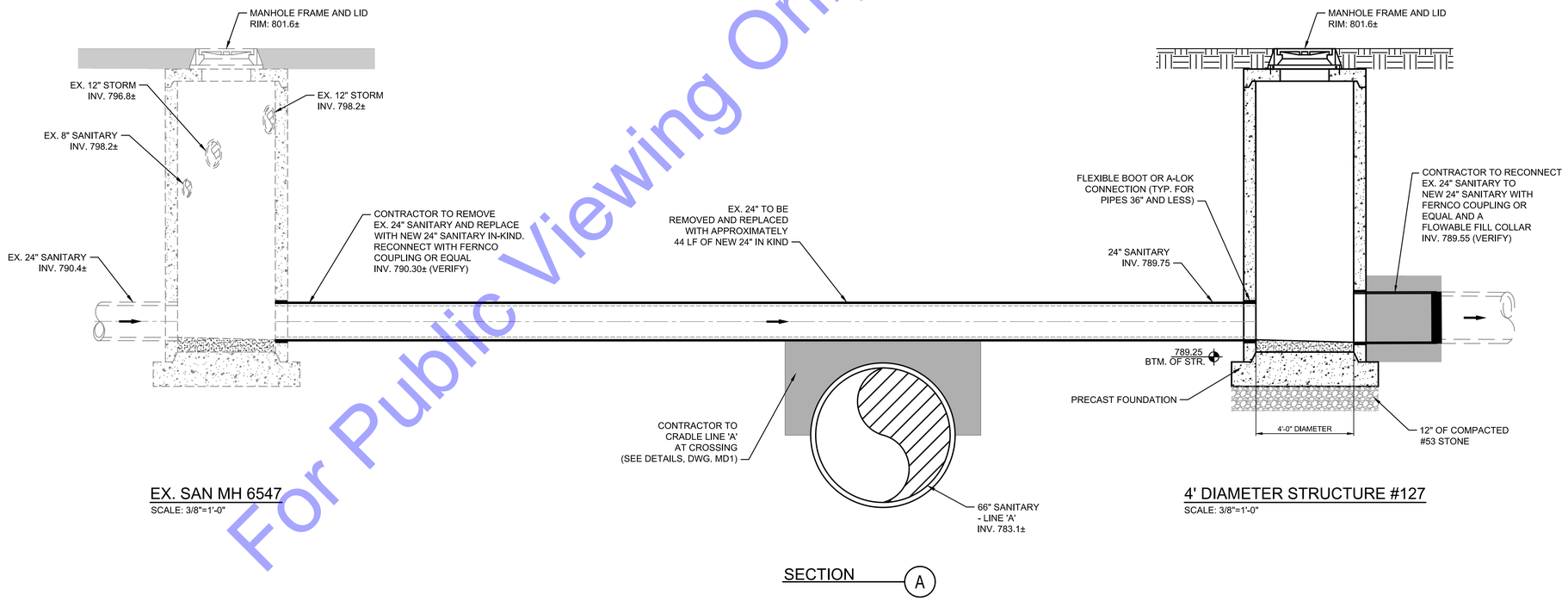

EX. SAN MH 6547
SCALE: 3/8"=1'-0"

4' DIAMETER STRUCTURE #127
SCALE: 3/8"=1'-0"

SECTION A

THE CONTRACTOR SHALL EXTEND STRUCTURE BASE OR USE ANTI-FLOATATION METHODS TO MEET BUOYANCY REQUIREMENTS (SEE SPECIFICATIONS).

For Public Viewing Only-Not For Downloading

COMMONWEALTH ENGINEERS, INC.
A wealth of resources to master a common goal.
https://commonwealthengineers.com/

BRIAN KREED WILSON
REGISTERED
No. PE11900866
STATE OF INDIANA
PROFESSIONAL ENGINEER
Brian Wilson
Signature
8/15/2025
Date

CITY OF KOKOMO, INDIANA
HOWARD COUNTY

NORTH SIDE INTERCEPTOR
IMPROVEMENTS PROJECT

© 2025 BY COMMONWEALTH ENGINEERS, INC. ALL RIGHTS RESERVED. REPRODUCTION BY ANY METHOD IN WHOLE OR IN PART WITHOUT PERMISSION IS PROHIBITED

Know what's below. Call before you dig.
1-800-382-5544
(ITS THE LAW)

No.	Submittal Revision	By	Date

Designed By:	Drawn By:	Checked By:
BW	BW/CH/EK	JH
Issue Date: 8/2025	Project No: S21082	Scale: AS SHOWN

STRUCTURE DETAILS - EX. SAN MH 6547 & STR. #127

Drawing No:
SS16
Sheet: 58 OF 137

File: Z:\SHARED\IN CLIENTS A-L\KOKOMO\S21082 NORTH SIDE INTERCEPTOR DESIGN\06 CAD\A CURRENT FILES\1 DRAWINGS\06 - S21082 - STRUCTURE DETAILS.DWG
Saved: 8/11/2025 8:51:17 AM Plotted: 8/11/2025 8:57:04 AM Current User: Bryce Persinger LastSavedBy: bwaterman

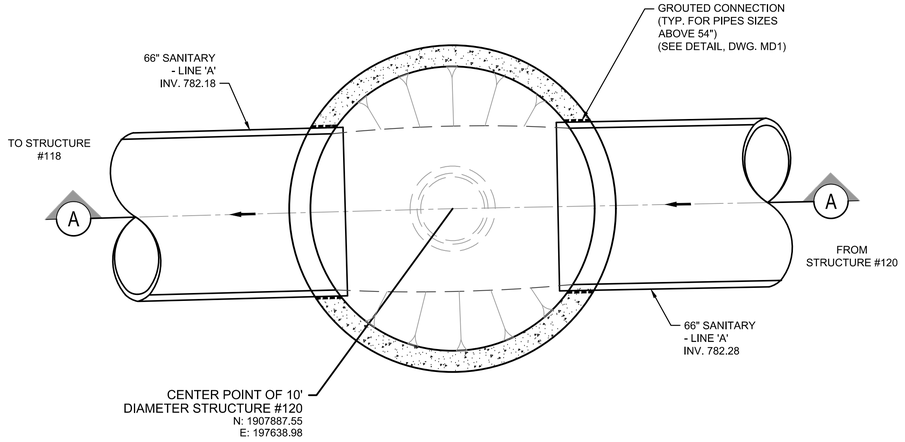

PROP. PLAN VIEW
(SEE DWG. PP10)

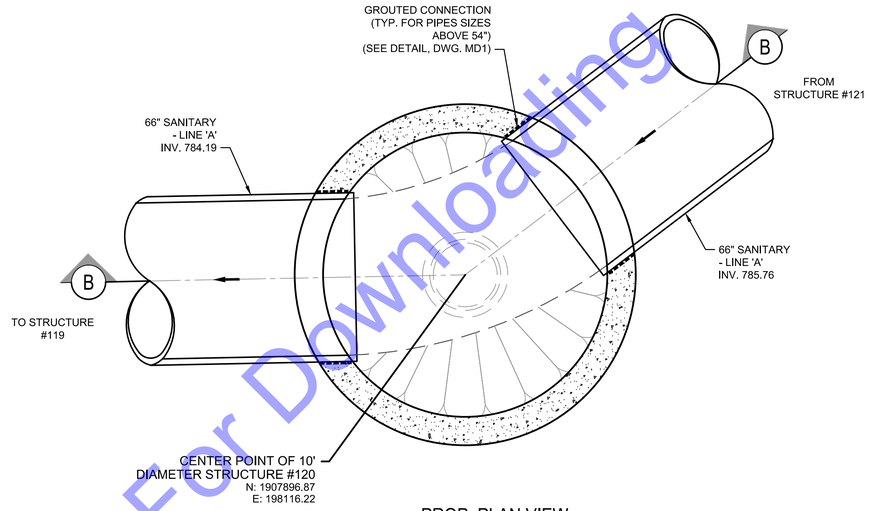

PROP. PLAN VIEW
(SEE DWG. PP11)

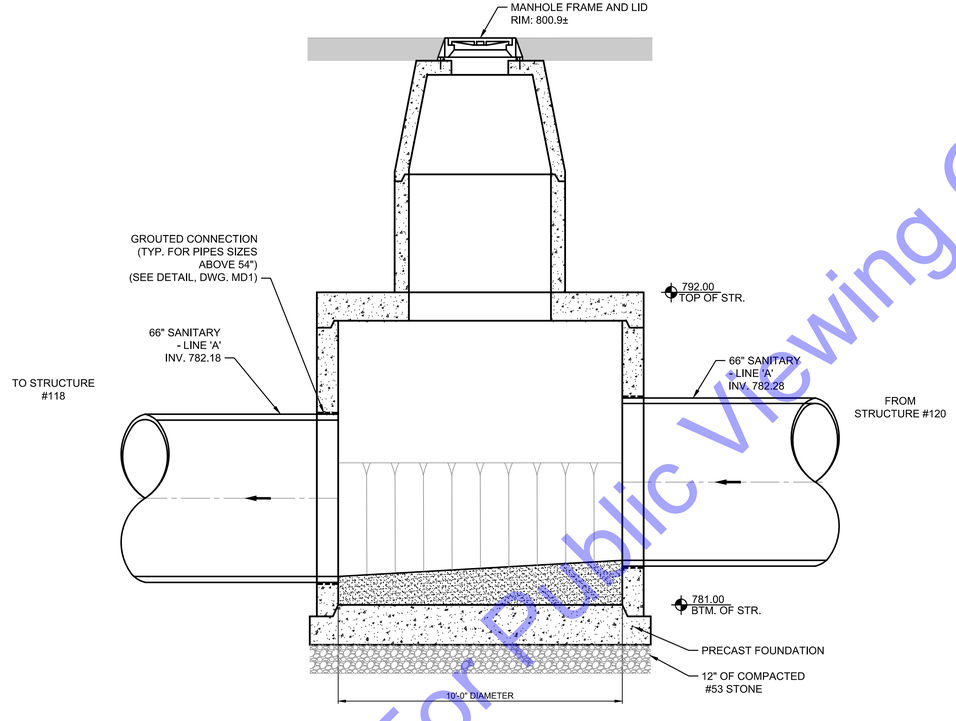

SECTION A

10' DIAMETER STRUCTURE #119
SCALE: 3/8"=1'-0"

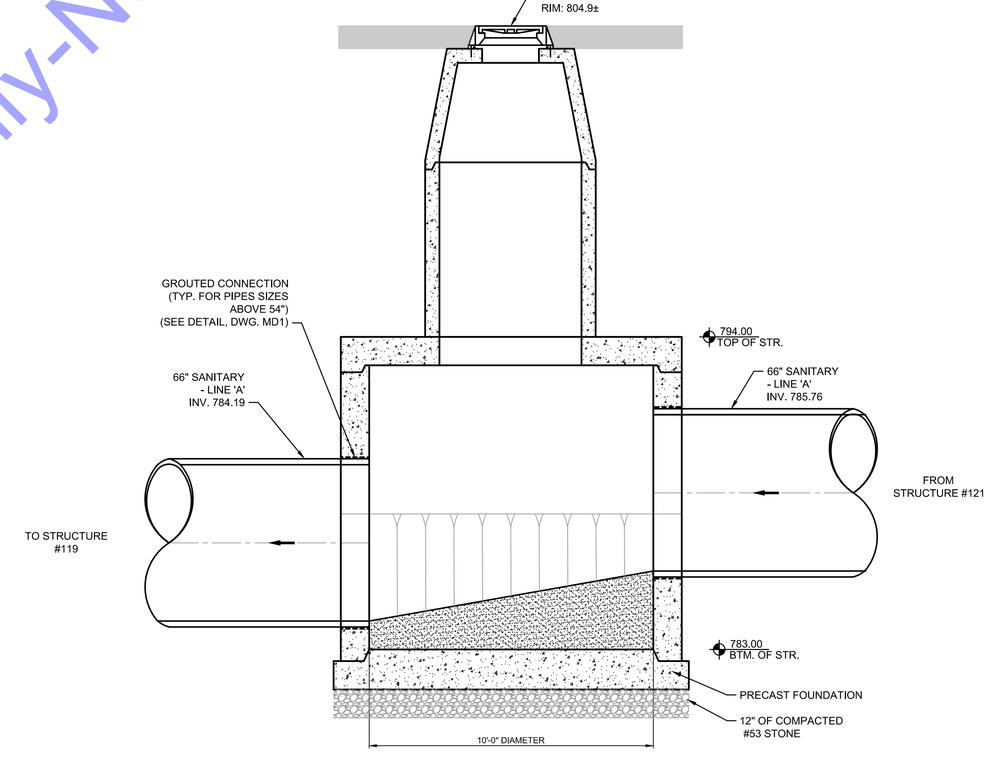

SECTION B

10' DIAMETER STRUCTURE #120
SCALE: 3/8"=1'-0"

THE CONTRACTOR SHALL EXTEND STRUCTURE BASE OR USE ANTI-FLOATATION METHODS TO MEET BUOYANCY REQUIREMENTS (SEE SPECIFICATIONS).

For Public Viewing Only-Not For Downloading

COMMONWEALTH ENGINEERS, INC.
A wealth of resources to master a common goal.
https://commonwealthengineers.com/

BRIAN KREED WILSON
REGISTERED
No. PE11900866
STATE OF
INDIANA
PROFESSIONAL ENGINEER
Brian Wilson
Signature
8/15/2025
Date

CITY OF KOKOMO, INDIANA
HOWARD COUNTY

NORTH SIDE INTERCEPTOR
IMPROVEMENTS PROJECT

© 2025 BY COMMONWEALTH ENGINEERS, INC. ALL RIGHTS RESERVED. REPRODUCTION BY ANY METHOD IN WHOLE OR IN PART WITHOUT PERMISSION IS PROHIBITED

Indiana 811
Know what's below. Call before you dig.
Know what's below. 811 before you dig.
1-800-382-5544
(ITS THE LAW)

No.	Submittal / Revision	By	Date

Designed By:	Drawn By:	Checked By:
BW	BW/CH/EK	JH
Issue Date:	Project No:	Scale:
8/2025	S21082	AS SHOWN

STRUCTURE DETAILS -
STR. #119 & #120

Drawing No:
SS17
Sheet: 59 OF 137

File: Z:\SHARED\IN CLIENTS A-L\KOKOMO\S21082 NORTH SIDE INTERCEPTOR DESIGN\06 CAD\A CURRENT FILES\ DRAWINGS\06 - S21082 - STRUCTURE DETAILS.DWG
Saved: 8/11/2025 8:51:17 AM Plotted: 8/11/2025 8:57:06 AM Current User: Bryce Persinger LastSavedBy: bwatterson

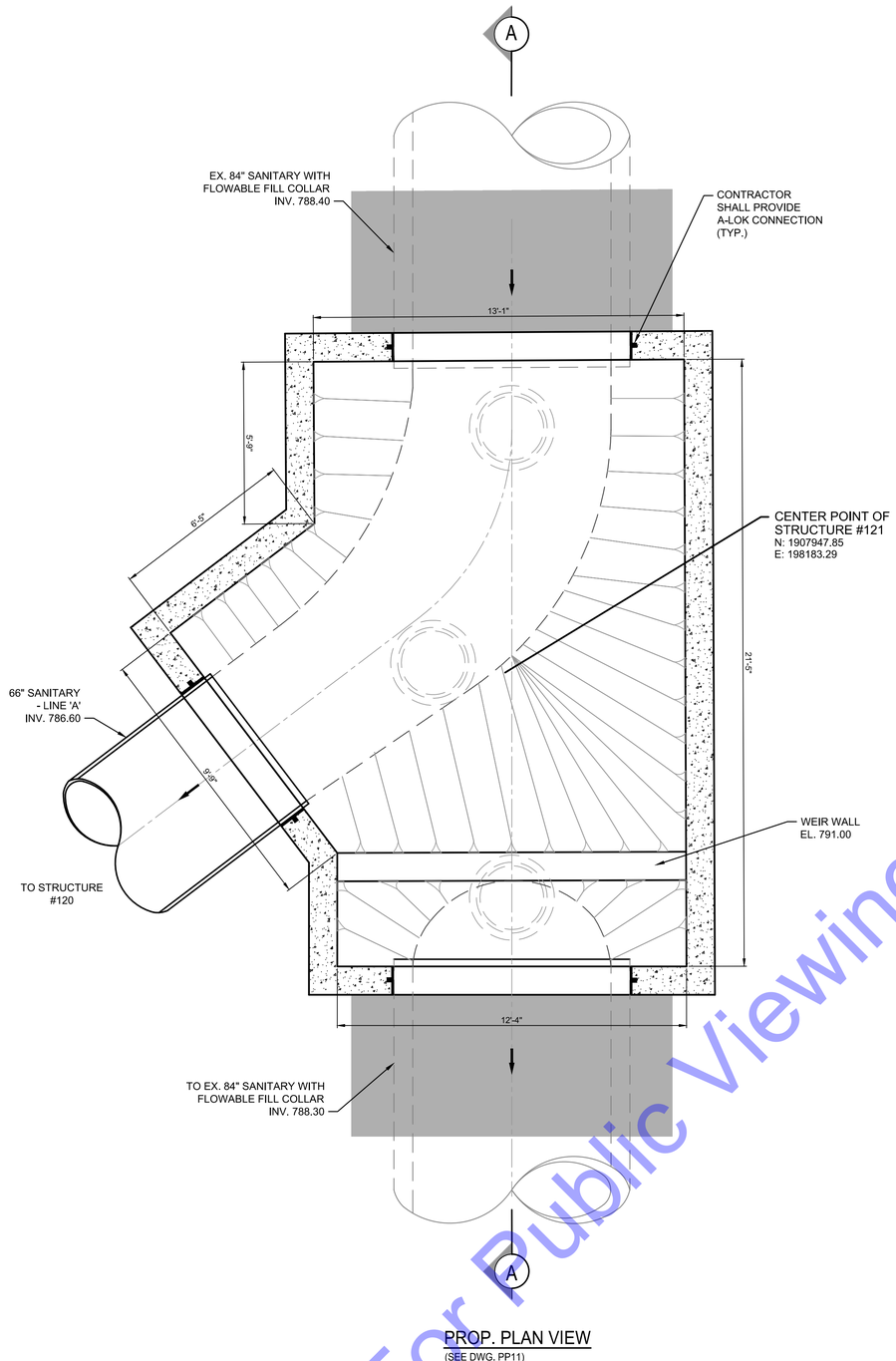

PROP. PLAN VIEW
(SEE DWG. PP11)

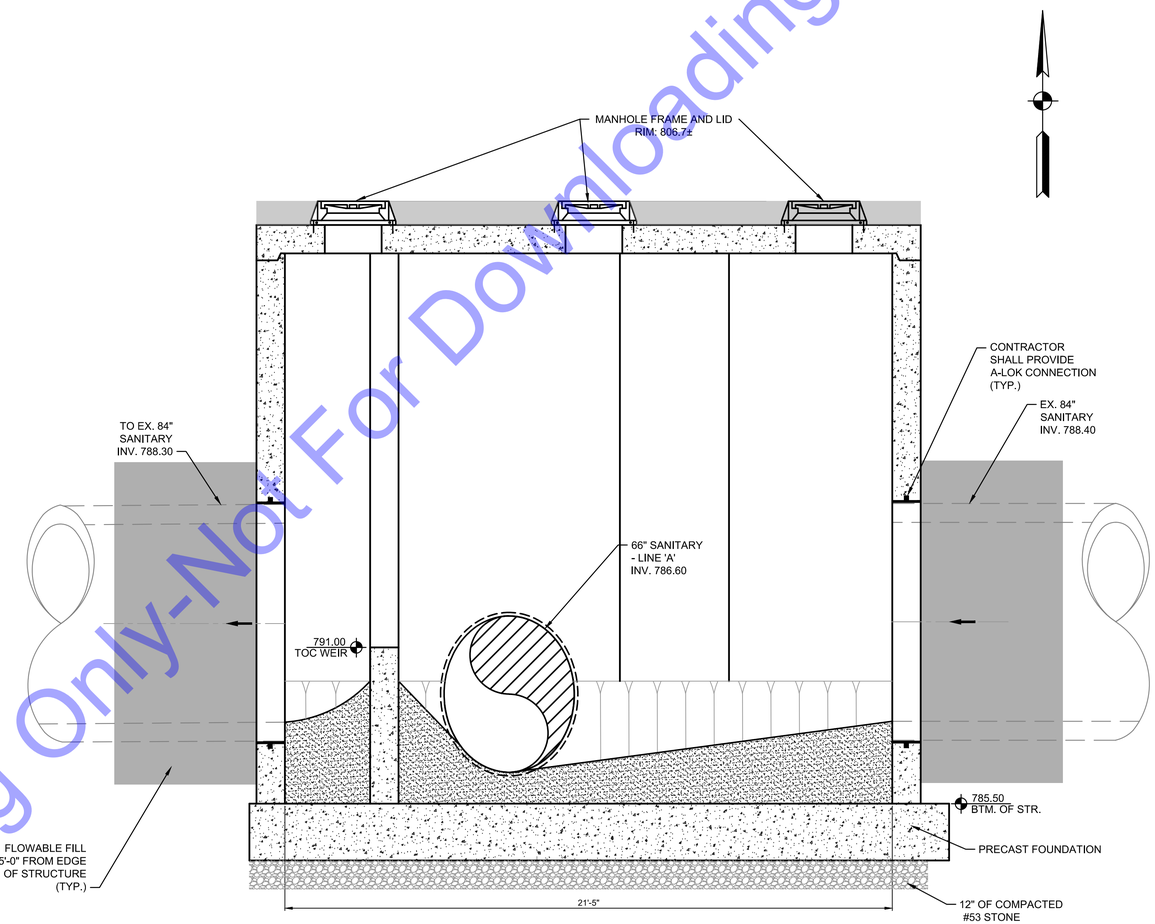

SECTION A

SPECIAL STRUCTURE #121
SCALE: 3/8"=1'-0"
(SEE STRUCTURAL DRAWINGS, S3-1)

THE CONTRACTOR SHALL EXTEND STRUCTURE BASE OR USE ANTI-FLOATATION METHODS TO MEET BUOYANCY REQUIREMENTS (SEE SPECIFICATIONS).

For Public Viewing Only-Not For Downloading

COMMONWEALTH ENGINEERS, INC.
A wealth of resources to master a common goal.
https://commonwealthengineers.com/

BRIAN KREED WILSON
REGISTERED
No. PE11900866
STATE OF
INDIANA
PROFESSIONAL ENGINEER
Brian Wilson
Signature
8/15/2025
Date

CITY OF KOKOMO, INDIANA
HOWARD COUNTY

NORTH SIDE INTERCEPTOR
IMPROVEMENTS PROJECT

© 2025 BY COMMONWEALTH ENGINEERS, INC. ALL RIGHTS RESERVED. REPRODUCTION BY ANY METHOD IN WHOLE OR IN PART WITHOUT PERMISSION IS PROHIBITED

Know what's below. Call before you dig.
1-800-382-5544
(ITS THE LAW)

No.	Submittal / Revision	By	Date

Designed By:	Drawn By:	Checked By:
BW	BW/CH/EK	JH
Issue Date:	Project No:	Scale:
8/2025	S21082	AS SHOWN

STRUCTURE DETAILS - STR. #121

Drawing No:
SS18
Sheet: 60 OF 137

File: Z:\SHARED\IN CLIENTS A-L\KOKOMO\S21082 NORTH SIDE INTERCEPTOR DESIGN\06 CAD\A CURRENT FILES\1 DRAWINGS\06 - S21082 - STRUCTURE DETAILS.DWG
Saved: 8/11/2025 8:51:17 AM Plotted: 8/11/2025 8:57:09 AM Current User: Bryce Persinger LastSavedBy: bwaterman

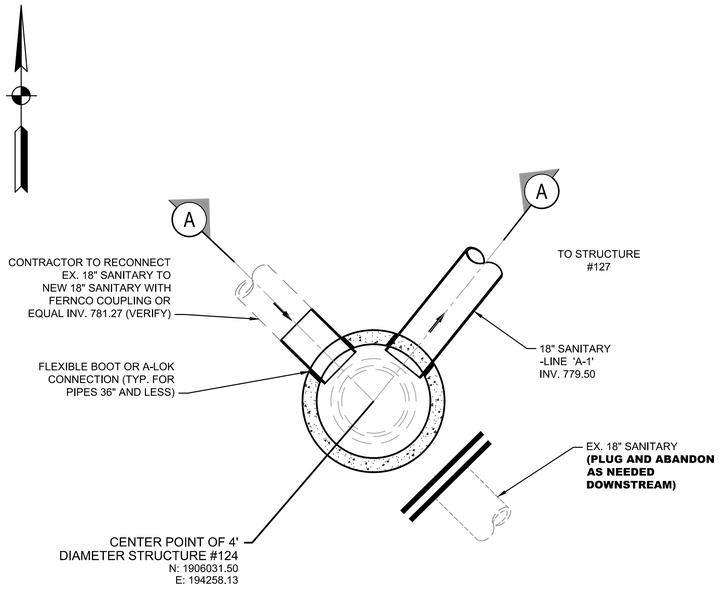

PROP. PLAN VIEW
(SEE DWG. PP12)

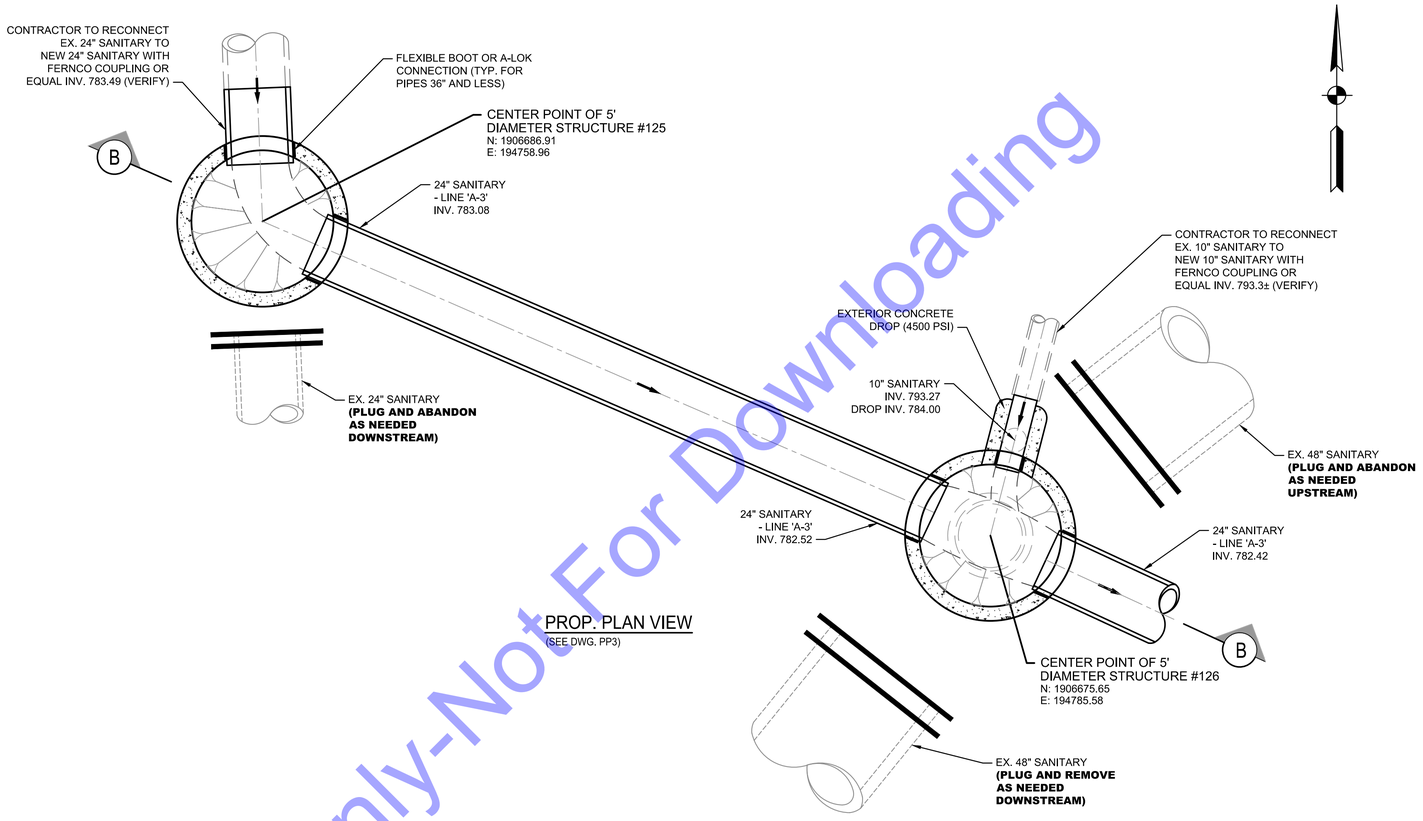

PROP. PLAN VIEW
(SEE DWG. PP3)

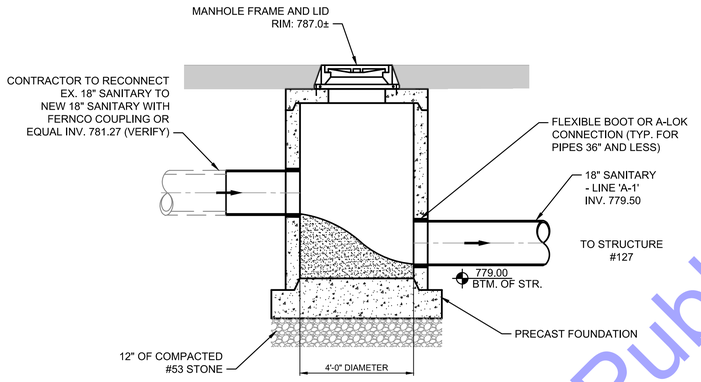

SECTION A

4' DIAMETER STRUCTURE #124
SCALE: 3/8"=1'-0"

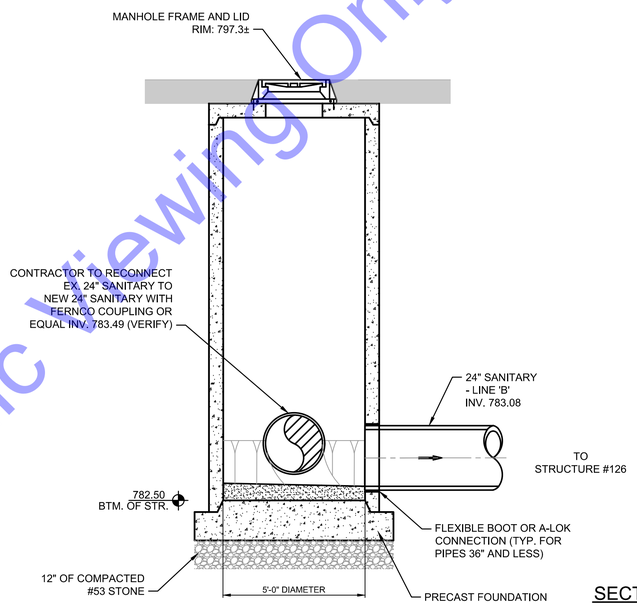

SECTION B

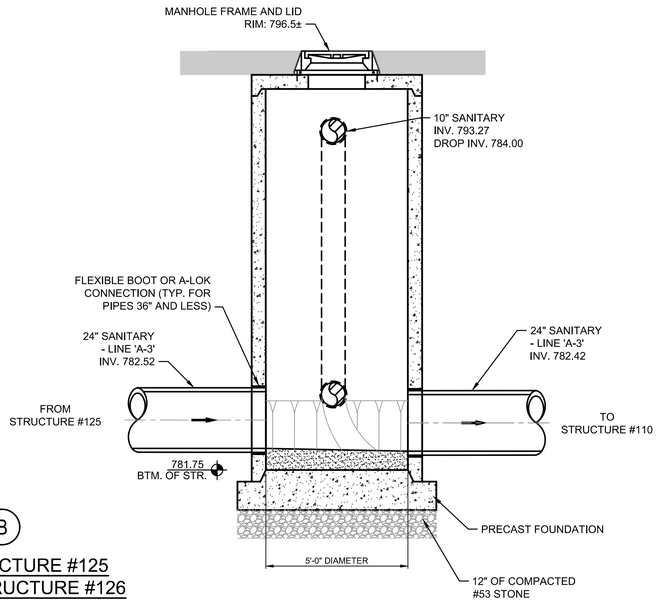

5' DIAMETER STRUCTURE #125
& 5' DIAMETER STRUCTURE #126
SCALE: 3/8"=1'-0"

THE CONTRACTOR SHALL EXTEND STRUCTURE BASE OR USE ANTI-FLOATATION METHODS TO MEET BUOYANCY REQUIREMENTS (SEE SPECIFICATIONS).

For Public Viewing Only-Not For Downloading

COMMONWEALTH ENGINEERS, INC.
A wealth of resources to master a common goal.
https://commonwealthengineers.com/

BRIAN KREED WILSON
REGISTERED
No. PE11900866
STATE OF INDIANA
PROFESSIONAL ENGINEER
Brian Wilson
Signature
8/15/2025
Date

CITY OF KOKOMO, INDIANA
HOWARD COUNTY

NORTH SIDE INTERCEPTOR
IMPROVEMENTS PROJECT

© 2025 BY COMMONWEALTH ENGINEERS, INC. ALL RIGHTS RESERVED. REPRODUCTION BY ANY METHOD IN WHOLE OR IN PART WITHOUT PERMISSION IS PROHIBITED

Indiana 811 Know what's below. Call before you dig.
Know what's below. 811 before you dig.
1-800-382-5544
(ITS THE LAW)

No.	Submittal Revision	By	Date

Designed By:	Drawn By:	Checked By:
BW	BW/CH/EK	JH
Issue Date:	Project No:	Scale:
8/2025	S21082	AS SHOWN

STRUCTURE DETAILS - STR. #124, #125 & #126

Drawing No:
SS19
Sheet: 61 OF 137

File: Z:\SHARED\IN CLIENTS A-L\KOKOMO\S21082 NORTH SIDE INTERCEPTOR DESIGN\06 CAD\A CURRENT FILES\1 DRAWINGS\06 - S21082 - STRUCTURE DETAILS.DWG
Saved: 8/12/2025 4:52:35 PM Plotted: 8/13/2025 10:47:36 AM Current User: Brian Waterman LastSavedBy: bwaterman

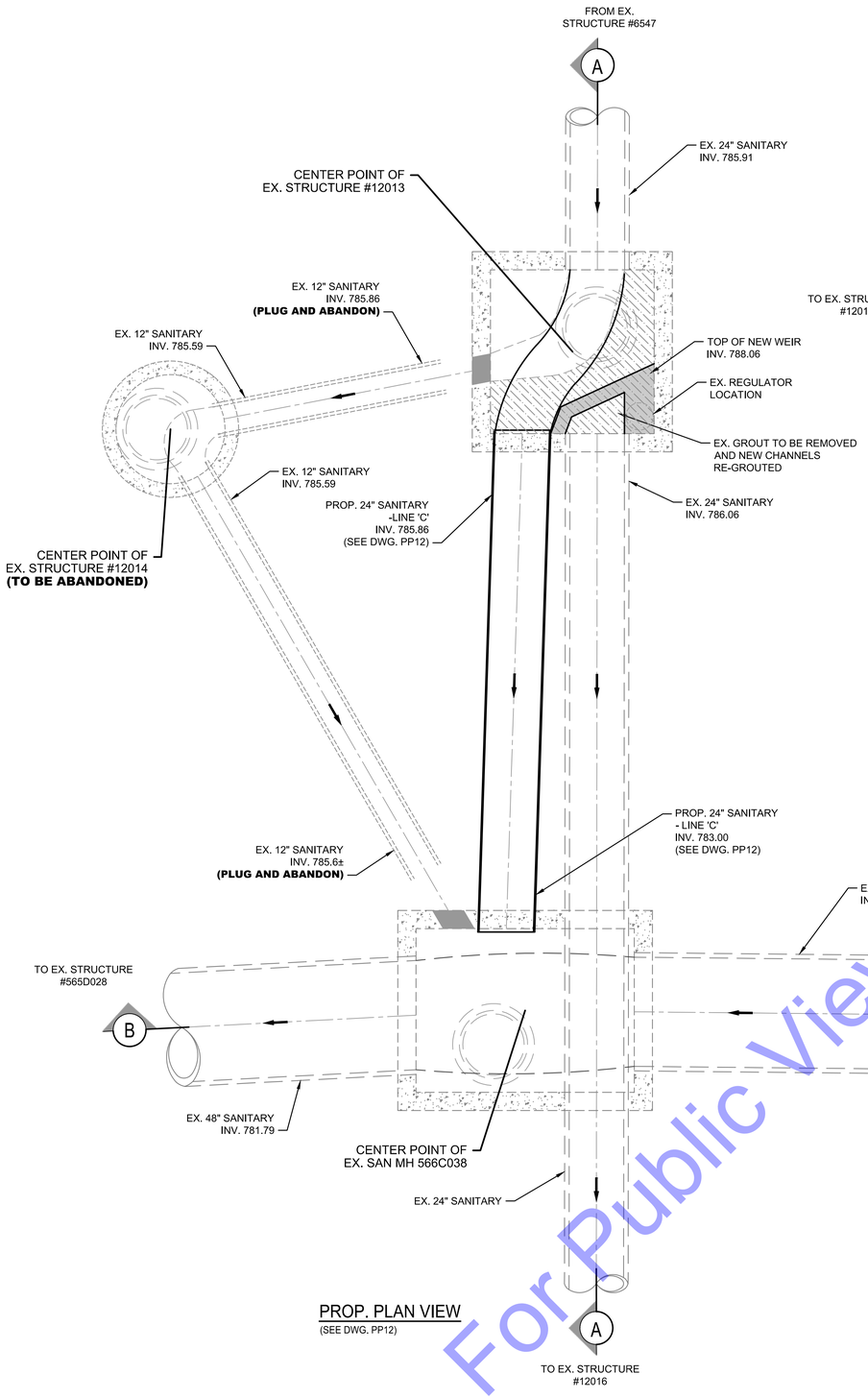

PROP. PLAN VIEW
(SEE DWG. PP12)

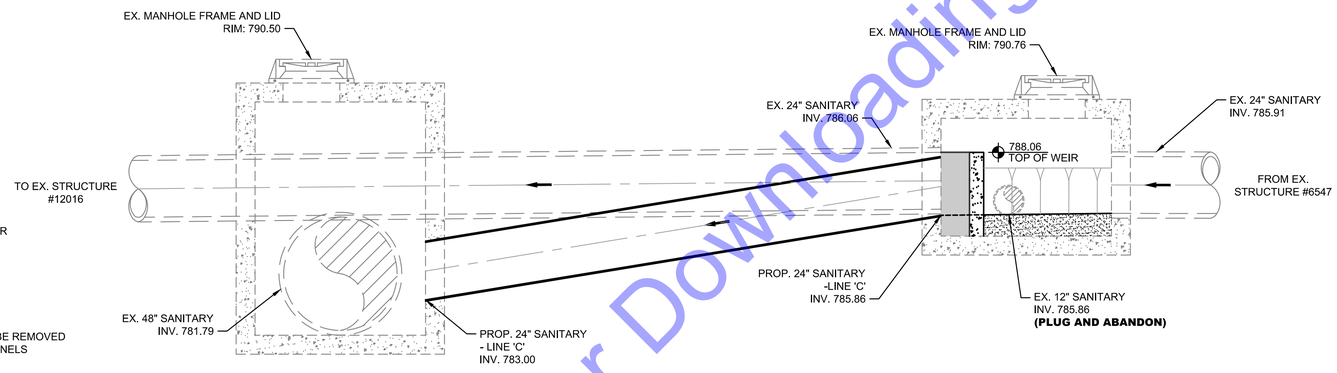

EX. SAN MAN 566C038
NO SCALE:

SECTION A

EX. STR. #12013
NO SCALE:

EARLY ACTION:

1. **CONTRACTOR SHALL CONFIRM THE INSIDE DIMENSIONS OF EX. STR. #12013. PROVIDE INFORMATION TO OWNER/ENGINEER PRIOR TO CONSTRUCTION.**
2. **CONTRACTOR TO FIELD VERIFY LOCATION AND DEPTH OF EX. 12" SANITARY ENTERING INTO EX. SAN MAN 566C038 PRIOR TO CONSTRUCTION. NOTIFY ENGINEER IF CONFLICT ARISES.**

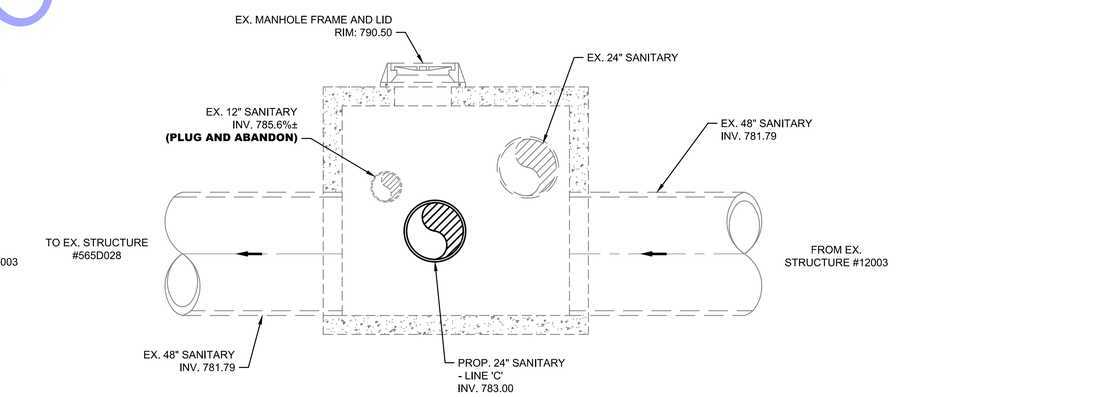

SECTION B

EX. SAN MAN 566C038
NO SCALE:

EXISTING CSO 016 STRUCTURE
NO SCALE:

THE CONTRACTOR TO FIELD VERIFY THE SIZE OF EXISTING STRUCTURES #12013 AND #12015 PRIOR TO CONSTRUCTION. NOTIFY ENGINEER OF SIZES OF STRUCTURES BEFORE PROCEEDING.

For Public Viewing Only
Not For Downloading

COMMONWEALTH ENGINEERS, INC.
A wealth of resources to master a common goal.
https://commonwealthengineers.com/

BRIAN KREED WILSON
REGISTERED
No. PE11900866
STATE OF
INDIANA
PROFESSIONAL ENGINEER
Brian Wilson
Signature
8/15/2025
Date

CITY OF KOKOMO, INDIANA
HOWARD COUNTY

NORTH SIDE INTERCEPTOR
IMPROVEMENTS PROJECT

© 2025 BY COMMONWEALTH ENGINEERS, INC. ALL RIGHTS RESERVED. REPRODUCTION BY ANY METHOD IN WHOLE OR IN PART WITHOUT PERMISSION IS PROHIBITED

Indiana 811
Know what's below. Call before you dig.
Know what's below. 811 before you dig.
1-800-382-5544
(ITS THE LAW)

No.	Submittal / Revision	By	Date

Designed By:	Drawn By:	Checked By:
BW	BW/CH/EK	JH
Issue Date:	Project No:	Scale:
8/2025	S21082	AS SHOWN

STRUCTURE DETAILS -
EX. CSO 016

Drawing No:
SS20
Sheet: 62 OF 137

File: Z:\SHARED\IN CLIENTS A-L\KOKOMO\S21082 NORTH SIDE INTERCEPTOR DESIGN\06 CAD\A CURRENT FILES\1 DRAWINGS\06 - S21082 - STRUCTURE DETAILS.DWG
Saved: 8/15/2025 1:38:37 PM Plotted: 8/18/2025 8:38:35 AM Current User: Brian Waterman LastSavedBy: bwaterman

SSF-41 STAINLESS STEEL DRAINAGE (FLAP) GATE - SPIGOTBACK RADIAL ARMS

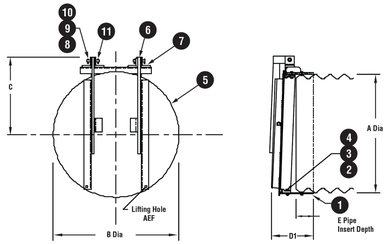

PARTS LIST	
Number	**Name**
1	Frame
2	Seat
3	Retainer Ring
4	Hex Hd. Bolt / Nut
5	Cover
6	Hinge Arm
7	Pivot Lug
8	Hex Hd. Bolt / Nut
9	Hinge Pin
10	Bushing
11	Washer
12	Spring Pin

SSF-41 DRAINAGE (FLAP) GATE FLATBACK (FLANGEBACK SIMILAR BUT WITH ASA STANDARD FLANGE DIMENSIONS)

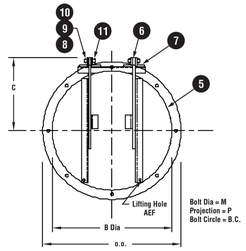

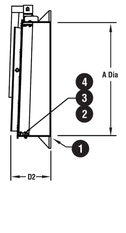

1. Add grout pad thickness to anchor bolt projection.
2. Also available with flange and drilling to attach to a 125# standard pipe flange.
3. If grout pad mounting is used add grout thickness to dimension.

DIMENSIONS IN INCHES									
Gate Size	**A**	**B**	**C**	**D2**	**E**	**O.D.**	**B.C.**	**M**	**P**
36	37 1/8	38½	24	10 3/8	4½	42 5/8	40¼	½	1½

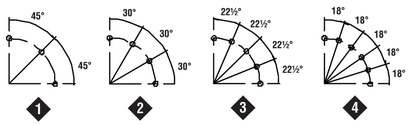

FLAP GATE DETAIL
SCALE: NONE

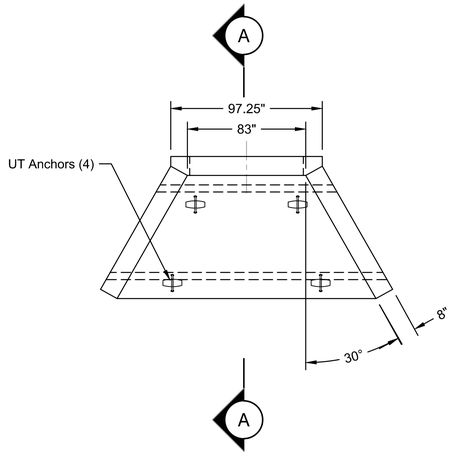

PLAN VIEW
SCALE: NONE

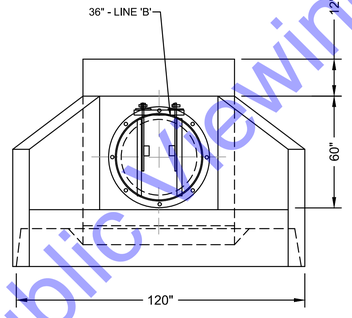

FRONT VIEW
SCALE: NONE

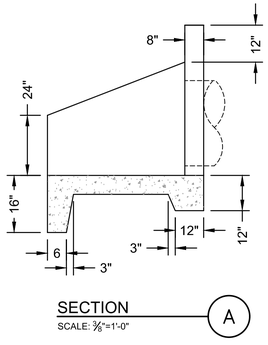

SECTION
SCALE: 3/8"=1'-0"

GENERAL NOTES:

1. REMOVE EXISTING RIP-RAP AS NECESSARY TO INSTALL CLASS II RIP-RAP.
2. CONTRACTORS WORK PLAN MUST FACILITATE CONSTRUCTION OF STR. #122 AND ASSOCIATED RIP-RAP UP TO FIVE FEET WATER DEPTHS.
3. PROTECTION OF EQUIPMENT AND MATERIALS WITHIN THE 100 YEAR FLOOD IS THE RESPONSIBILITY OF THE CONTRACTOR.

OUTFALL STRUCTURE #122
SCALE: 3/8"=1'-0"

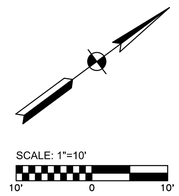

GENERAL NOTE:

CONTRACTOR SHALL PROVIDE CLASS II RIP RAP WITH GEOTEXTILE FABRIC IN ALL AREAS DISTURBED DURING CONSTRUCTION OF THE OUTFALL STRUCTURE AND PIPE FROM TOP OF BANK TO BELOW NORMAL WATER LEVELS. EXTENTS OF RIP RAP AND GEOTEXTILE SHOWN ON PLAN VIEW TO BE APPROVED BY ENGINEER.

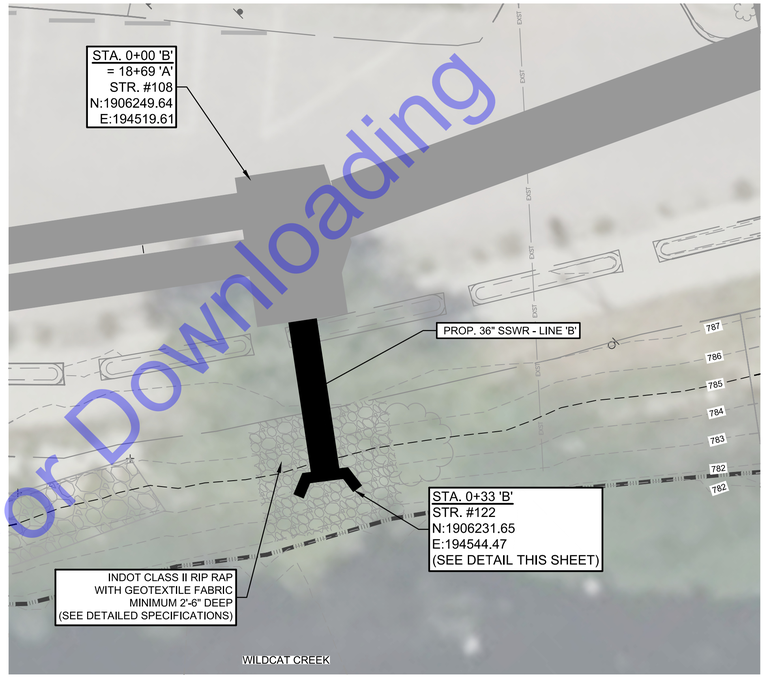

PLAN VIEW
SCALE: 1"=10'-0"

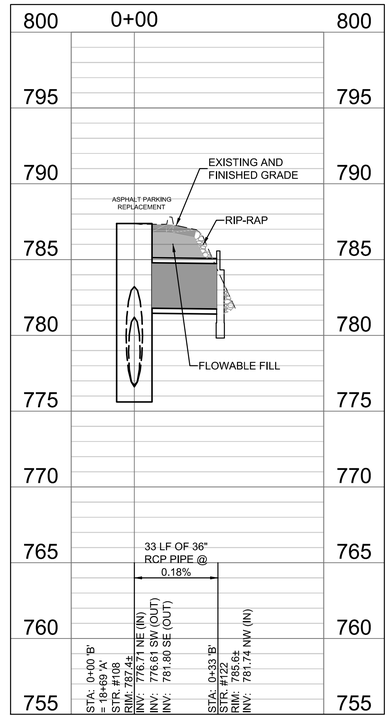

PROFILE - LINE 'B'
HORIZONTAL SCALE: 1"=30'-0"
VERTICAL SCALE: 1"=5'-0"

For Public Viewing Only-Not For Downloading

COMMONWEALTH ENGINEERS, INC.
A wealth of resources to master a common goal.
https://commonwealthengineers.com/

BRIAN KREED WILSON
REGISTERED
No. PE11900866
STATE OF INDIANA
PROFESSIONAL ENGINEER
Brian Wilson
Signature
8/15/2025
Date

CITY OF KOKOMO, INDIANA
HOWARD COUNTY

NORTH SIDE INTERCEPTOR IMPROVEMENTS PROJECT

© 2025 BY COMMONWEALTH ENGINEERS, INC. ALL RIGHTS RESERVED. REPRODUCTION BY ANY METHOD IN WHOLE OR IN PART WITHOUT PERMISSION IS PROHIBITED

Know what's below. Call before you dig.
1-800-382-5544 (ITS THE LAW)
Know what's below. 811 before you dig.

No.	Submittal Revision	By	Date

Designed By:	Drawn By:	Checked By:
BW	BW/CH/EK	JH
Issue Date:	**Project No:**	**Scale:**
8/2025	S21082	AS SHOWN

OUTFALL PLAN AND PROFILE AND DETAILS - NEW OUTFALL STRUCTURE #122

Drawing No:
OF1
Sheet: 63 OF 137

File: Z:\SHARED\IN CLIENTS A-L\KOKOMO\S21082 NORTH SIDE INTERCEPTOR DESIGN\06 CAD\A CURRENT FILES\1 DRAWINGS\05 - S21082 - PLAN AND PROFILE.DWG
Saved: 8/15/2025 1:42:10 PM Plotted: 8/18/2025 8:40:42 AM Current User: Brian Waterman LastSavedBy: bwaterman

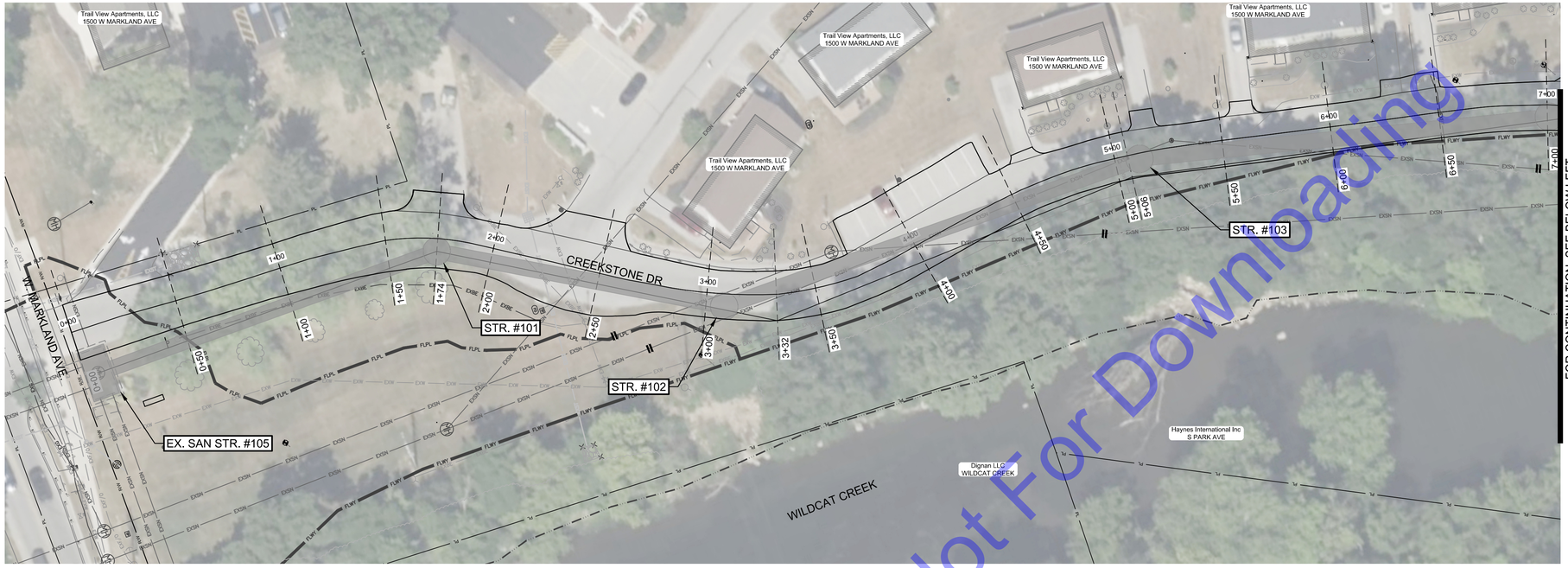

CREEKSTONE DRIVE - CROSS SECTION PLAN

SCALE: 1"=30'-0"

SCALE: 1"=30'

30' 0 30'

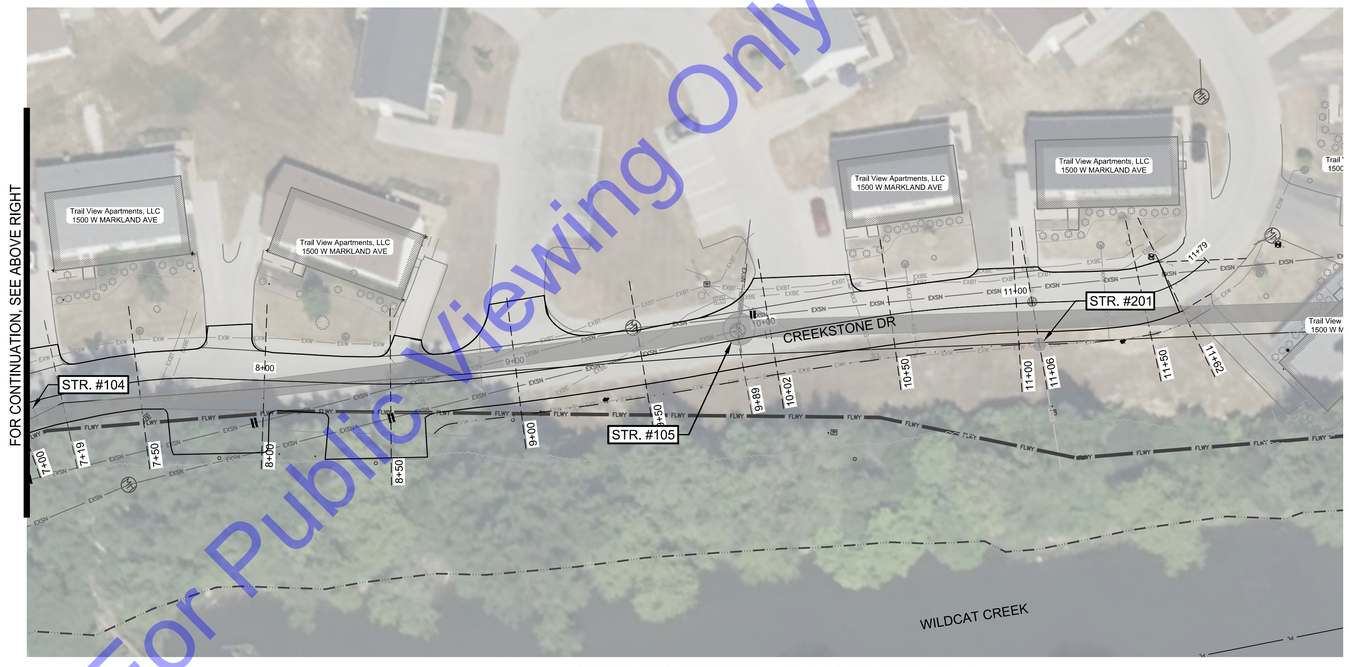

CREEKSTONE DRIVE - CROSS SECTION PLAN

SCALE: 1"=30'-0"

SCALE: 1"=30'

30' 0 30'

For Public Viewing Only-Not For Downloading

COMMONWEALTH ENGINEERS, INC.
A wealth of resources to master a common goal.
https://commonwealthengineers.com/

BRIAN KREED WILSON
REGISTERED
No. PE11900866
STATE OF INDIANA
PROFESSIONAL ENGINEER
Brian Wilson 8/15/2025
Signature Date

CITY OF KOKOMO, INDIANA
HOWARD COUNTY

NORTH SIDE INTERCEPTOR
IMPROVEMENTS PROJECT

© 2025 BY COMMONWEALTH ENGINEERS, INC. ALL RIGHTS RESERVED. REPRODUCTION BY ANY METHOD IN WHOLE OR IN PART WITHOUT PERMISSION IS PROHIBITED

Know what's below. Call before you dig.
Know what's below. 811 before you dig.
1-800-382-5544
(ITS THE LAW)

No.	Submittal Revision	By	Date

Designed By:	Drawn By:	Checked By:
BW	BW/CH/EK	JH
Issue Date:	Project No:	Scale:
8/2025	S21082	AS SHOWN

CREEKSTONE DRIVE - CROSS SECTION PLAN

Drawing No:
XS1
Sheet: 64 OF 137

File: Z:\SHARED\IN CLIENTS A-L\KOKOMO\S21082 NORTH SIDE INTERCEPTOR DESIGN\06 CAD\A CURRENT FILES\1 DRAWINGS\07 - S21082 - CROSS SECTIONS.DWG
Saved: 8/13/2025 7:16:11 AM Plotted: 8/13/2025 11:43:15 AM Current User: Brian Waterman LastSavedBy: eklein richert



KINGSTON ROAD - CROSS SECTION PLAN

SCALE: 1"=30'-0"

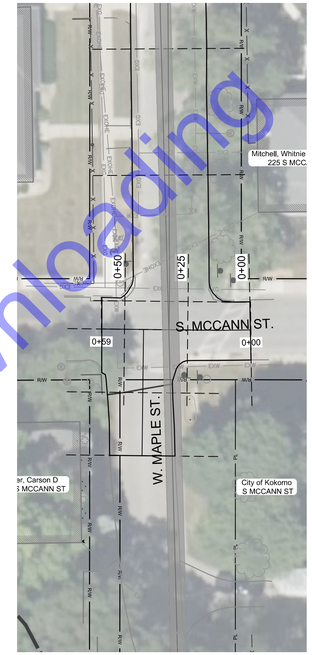

MCCANN SREET - CROSS SECTION PLAN

SCALE: 1"=30'-0"

SCALE: 1"=30'

30' 0 30'



MAPLE SREET - CROSS SECTION PLAN

SCALE: 1"=30'-0"

SCALE: 1"=30'

30' 0 30'

For Public Viewing Only-Not For Downloading

COMMONWEALTH ENGINEERS, INC.
A wealth of resources to master a common goal.
https://commonwealthengineers.com/

BRIAN KREED WILSON
REGISTERED
No. PE11900866
STATE OF INDIANA
PROFESSIONAL ENGINEER
Signature 8/15/2025 Date

CITY OF KOKOMO, INDIANA
HOWARD COUNTY

NORTH SIDE INTERCEPTOR IMPROVEMENTS PROJECT

© 2025 BY COMMONWEALTH ENGINEERS, INC. ALL RIGHTS RESERVED. REPRODUCTION BY ANY METHOD IN WHOLE OR IN PART WITHOUT PERMISSION IS PROHIBITED

Know what's below. Call before you dig.
Know what's below. 811 before you dig.
1-800-382-5544
(ITS THE LAW)

No.	Submittal Revision	By	Date

Designed By:	Drawn By:	Checked By:
BW	BW/CH/EK	JH
Issue Date:	Project No:	Scale:
8/2025	S21082	AS SHOWN

KINGSTON ROAD, MCCANN SREET, & MAPLE STREET - CROSS SECTION PLANS

Drawing No:
XS2
Sheet: 65 OF 137

File: Z:\SHARED\IN CLIENTS A-L\KOKOMO\S21082 NORTH SIDE INTERCEPTOR DESIGN\06 CAD\A CURRENT FILES\1 DRAWINGS\07 - S21082 - CROSS SECTIONS.DWG
Saved: 8/13/2025 7:16:11 AM Plotted: 8/13/2025 11:45:16 AM Current User: Brian Waterman LastSavedBy: eklein/richert

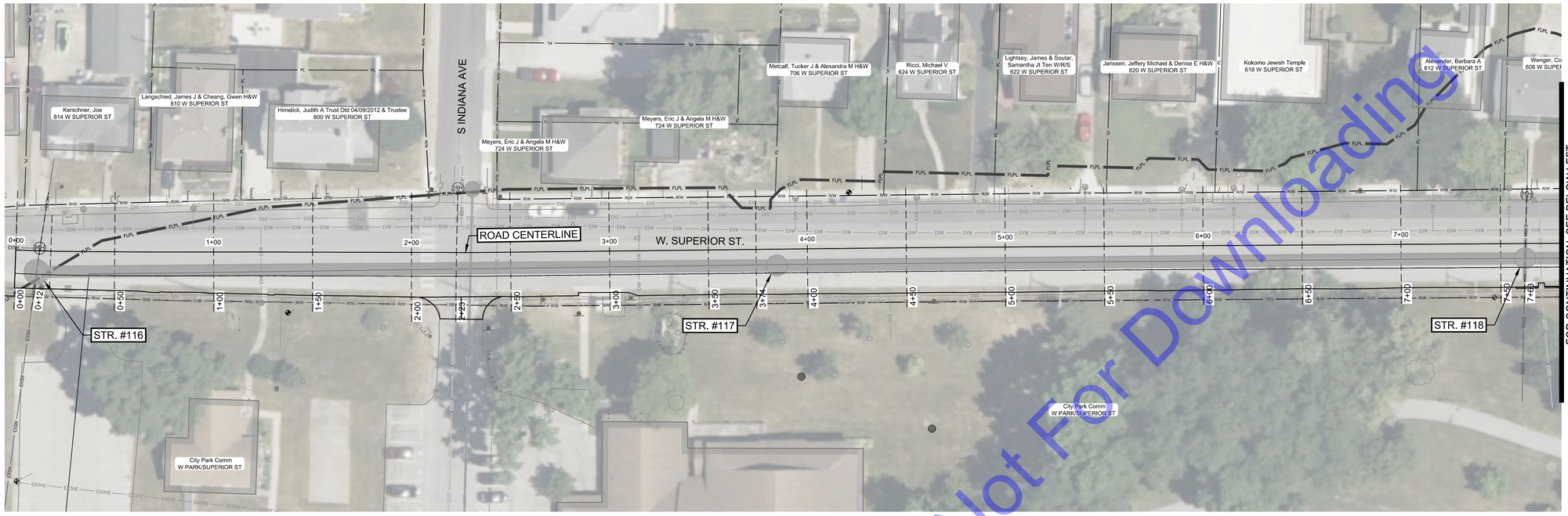

SUPERIOR SREET - CROSS SECTION PLAN

SCALE: 1"=30'-0"

SCALE: 1"=30'

30' 0 30'

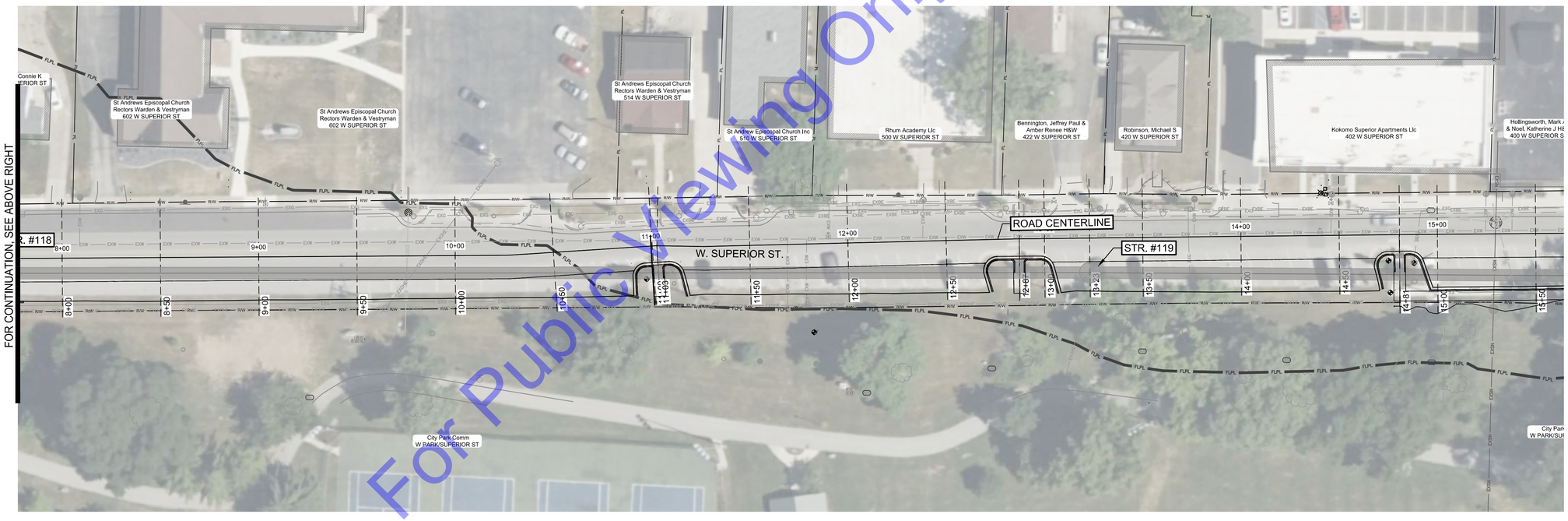

SUPERIOR SREET - CROSS SECTION PLAN

SCALE: 1"=30'-0"

SCALE: 1"=30'

30' 0 30'

For Public Viewing Only-Not For Downloading

COMMONWEALTH ENGINEERS, INC.
A wealth of resources to master a common goal.
https://commonwealthengineers.com/

BRIAN KREED WILSON
REGISTERED
No. PE11900866
STATE OF INDIANA
PROFESSIONAL ENGINEER
Signature 8/15/2025 Date

CITY OF KOKOMO, INDIANA
HOWARD COUNTY

NORTH SIDE INTERCEPTOR
IMPROVEMENTS PROJECT

© 2025 BY COMMONWEALTH ENGINEERS, INC. ALL RIGHTS RESERVED. REPRODUCTION BY ANY METHOD IN WHOLE OR IN PART WITHOUT PERMISSION IS PROHIBITED

Know what's below. Call before you dig.
1-800-382-5544 (IT'S THE LAW)

No.	Submittal/ Revision	By	Date

Designed By:	Drawn By:	Checked By:
BW	BW/CH/EK	JH
Issue Date:	Project No:	Scale:
8/2025	S21082	AS SHOWN

SUPERIOR STREET - CROSS SECTION PLANS

Drawing No:
XS3
Sheet: 66 OF 137

File: Z:\SHARED\IN CLIENTS A-L\KOKOMO\S21082 NORTH SIDE INTERCEPTOR DESIGN\06 CAD\A CURRENT FILES\1 DRAWINGS\07 - S21082 - CROSS SECTIONS.DWG
Saved: 8/13/2025 7:16:11 AM Plotted: 8/13/2025 11:46:38 AM Current User: Brian Wotermon LastSavedBy: eleinrichart

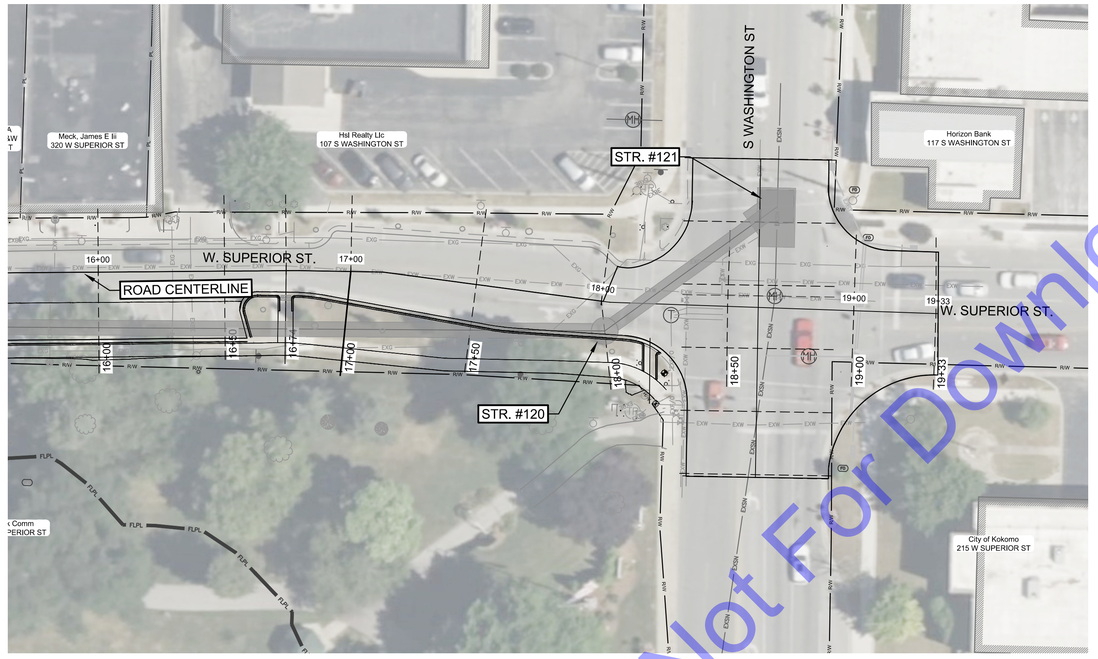

SUPERIOR SREET - CROSS SECTION PLAN

SCALE: 1"=30'-0"

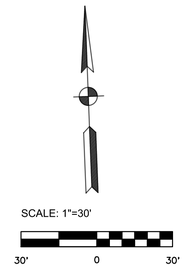

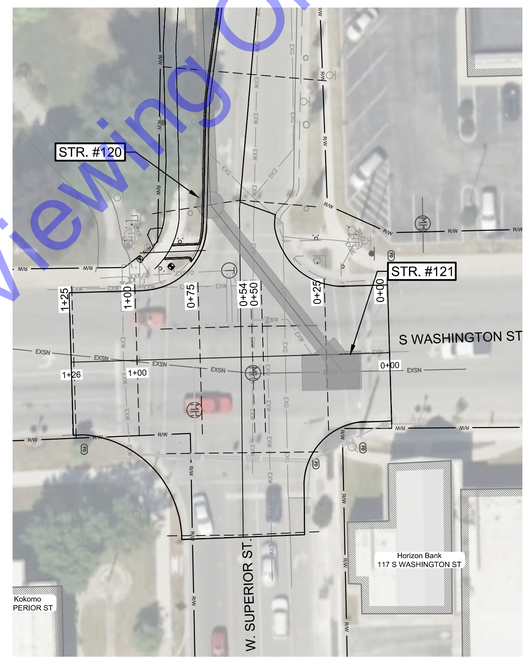

WASHINGTON SREET - CROSS SECTION PLAN

SCALE: 1"=30'-0"

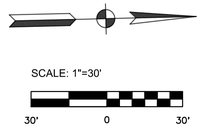

FOR CONTINUATION, SEE ABOVE RIGHT

For Public Viewing Only-Not For Downloading

COMMONWEALTH ENGINEERS, INC.
A wealth of resources to master a common goal.
https://commonwealthengineers.com/

BRIAN KREED WILSON
REGISTERED
No. PE11900866
STATE OF INDIANA
PROFESSIONAL ENGINEER

Brian Wilson
Signature

8/15/2025
Date

CITY OF KOKOMO, INDIANA
HOWARD COUNTY

NORTH SIDE INTERCEPTOR
IMPROVEMENTS PROJECT

© 2025 BY COMMONWEALTH ENGINEERS, INC. ALL RIGHTS RESERVED. REPRODUCTION, BY ANY METHOD IN WHOLE OR IN PART WITHOUT PERMISSION IS PROHIBITED

Indiana 811
Know what's below. Call before you dig.
Know what's below. 811 before you dig.
1-800-382-5544
(ITS THE LAW)

No.	Submittal Revision	By	Date

Designed By:	Drawn By:	Checked By:
BW	BW/CH/EK	JH
Issue Date:	Project No:	Scale:
8/2025	S21082	AS SHOWN

SUPERIOR SREET & WASHINGTON SREET - CROSS SECTION PLANS

Drawing No:
XS4

Sheet: 67 OF 137

File: Z:\SHARED\IN CLIENTS A-L\KOKOMO\S21082 NORTH SIDE INTERCEPTOR DESIGN\06 CAD\A CURRENT FILES\1 DRAWINGS\07 - S21082 - CROSS SECTIONS.DWG
Saved: 8/13/2025 7:16:11 AM Plotted: 8/13/2025 11:48:01 AM Current User: Brian Waterman LastSavedBy: eileinrichert

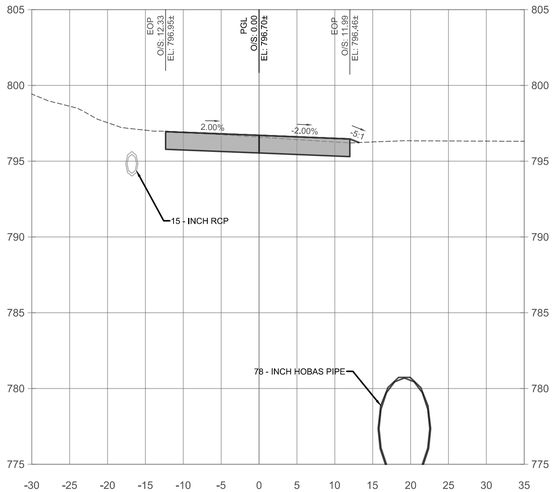

0+50

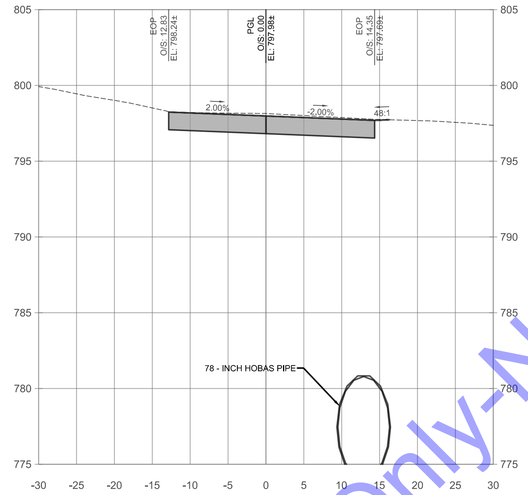

1+50

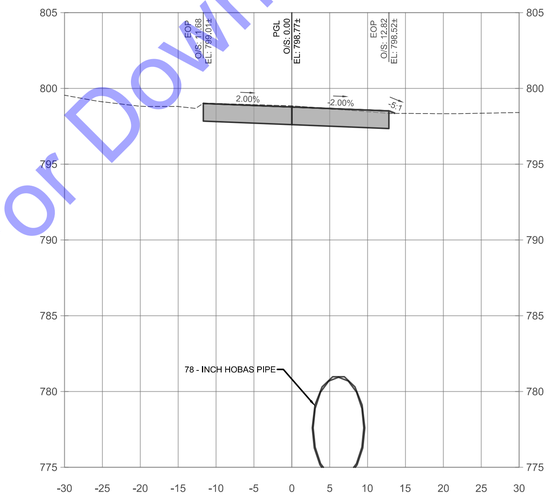

2+00

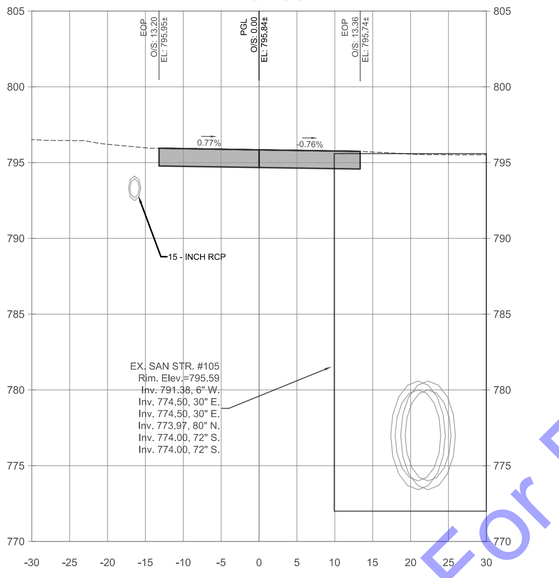

0+00

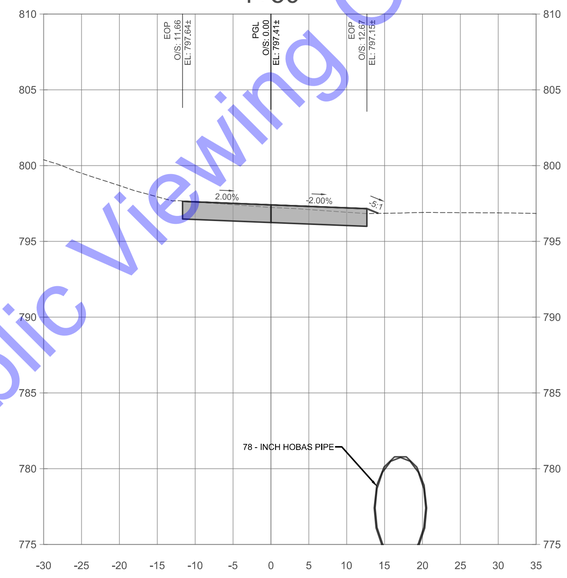

1+00

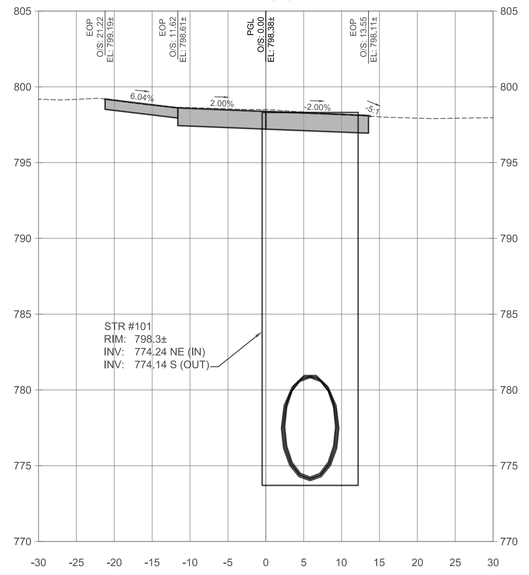

1+74

CREEKSTONE DR - CROSS SECTIONS

SCALE: 1"=10'-0" HORIZONTAL
1"=5'-0" VERTICAL

CROSS SECTION LEGEND
FINISH GRADE
EXISTING GRADE

For Public Viewing Only-Not For Downloading

COMMONWEALTH ENGINEERS, INC.
A wealth of resources to master a common goal.
https://commonwealthengineers.com/

BRIAN KREED WILSON
REGISTERED
No. PE11900866
STATE OF
INDIANA
PROFESSIONAL ENGINEER
Signature 8/15/2025 Date

CITY OF KOKOMO, INDIANA
HOWARD COUNTY

NORTH SIDE INTERCEPTOR
IMPROVEMENTS PROJECT

© 2025 BY COMMONWEALTH ENGINEERS, INC. ALL RIGHTS RESERVED. REPRODUCTION BY ANY METHOD IN WHOLE OR IN PART WITHOUT PERMISSION IS PROHIBITED

Indiana 811 Know what's below. Call before you dig.
Know what's below. 811 before you dig.
1-800-382-5544
(ITS THE LAW)

No.	Submittal Revision	By	Date

Designed By:	Drawn By:	Checked By:
BW	BW/CH/EK	JH
Issue Date: 8/2025	Project No: S21082	Scale: AS SHOWN

CREEKSTONE DR
CROSS SECTIONS

Drawing No:
XS5
Sheet: 68 OF 137

File: Z:\SHARED\N CLIENTS A-L\KOKOMO\S21082 NORTH SIDE INTERCEPTOR DESIGN\06 CAD\A CURRENT FILES\1 DRAWINGS\07 - S21082 - CROSS SECTIONS.DWG
Saved: 8/13/2025 7:16:11 AM Plotted: 8/13/2025 11:49:28 AM Current User: Brian Waterman LastSavedBy: ekleinrichert

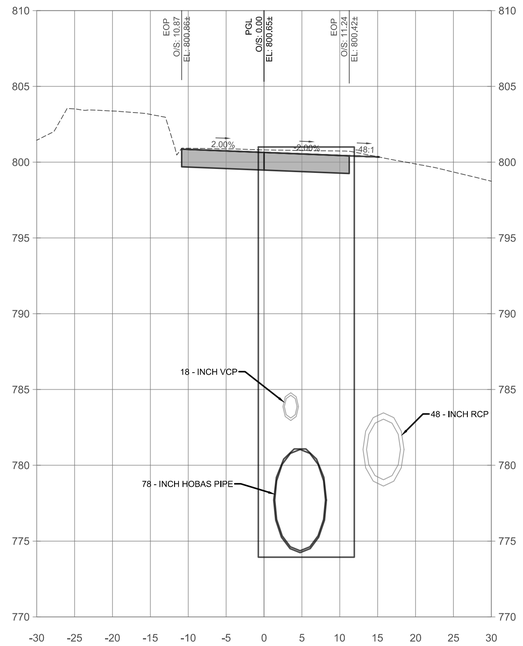

3+00

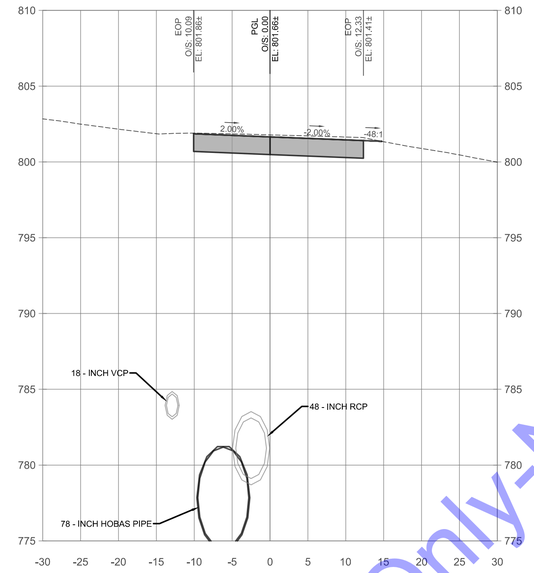

3+50

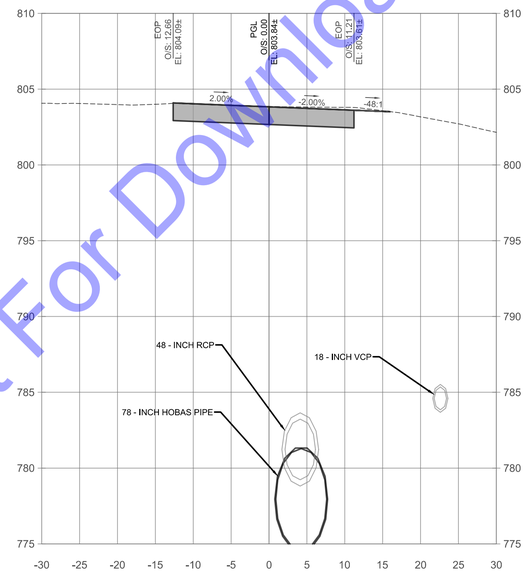

4+50

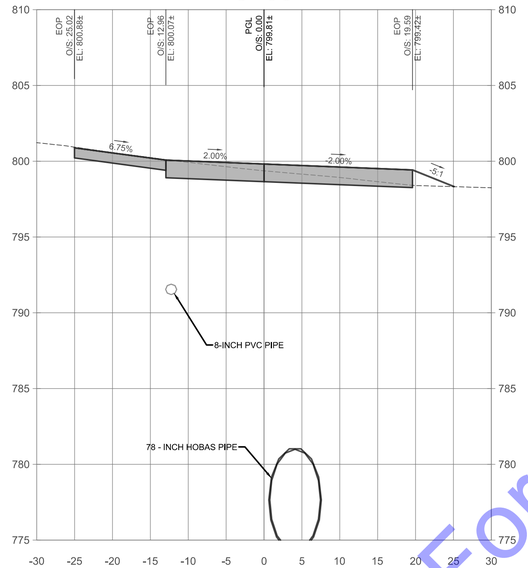

2+50

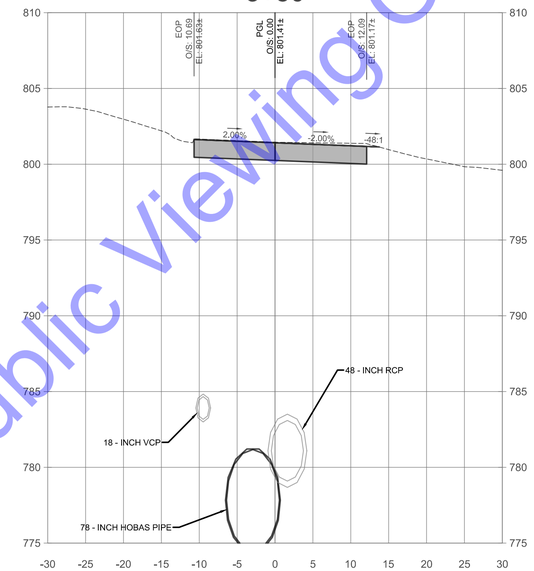

3+32

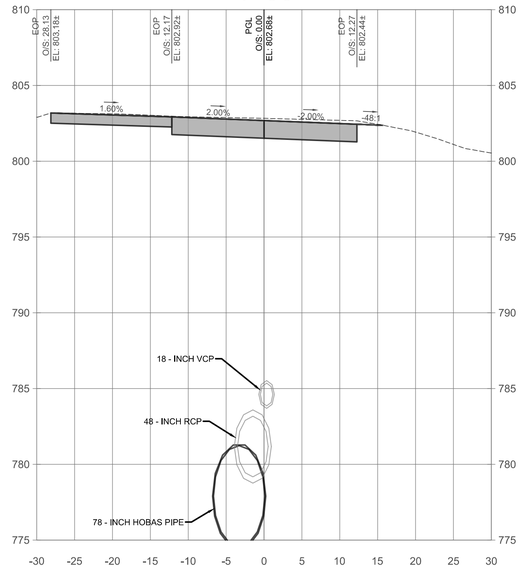

4+00

CREEKSTONE DR - CROSS SECTIONS

SCALE: 1"=10'-0" HORIZONTAL
1"=5'-0" VERTICAL

CROSS SECTION LEGEND
FINISH GRADE
EXISTING GRADE

For Public Viewing Only-Not For Downloading

COMMONWEALTH ENGINEERS, INC.
A wealth of resources to master a common goal.
https://commonwealthengineers.com/

BRIAN KREED WILSON
REGISTERED
No. PE11900866
STATE OF INDIANA
PROFESSIONAL ENGINEER
Signature 8/15/2025 Date

CITY OF KOKOMO, INDIANA
HOWARD COUNTY

NORTH SIDE INTERCEPTOR
IMPROVEMENTS PROJECT

© 2025 BY COMMONWEALTH ENGINEERS, INC. ALL RIGHTS RESERVED. REPRODUCTION BY ANY METHOD, IN WHOLE OR IN PART WITHOUT PERMISSION IS PROHIBITED

Know what's below. Call before you dig.
1-800-382-5544 (ITS THE LAW)

No.	Submittal / Revision	By	Date

Designed By:	Drawn By:	Checked By:
BW	BW/CH/EK	JH
Issue Date: 8/2025	Project No: S21082	Scale: AS SHOWN

CREEKSTONE DR
CROSS SECTIONS

Drawing No:
XS6
Sheet: 69 OF 137

File: Z:\SHARED\IN CLIENTS A-L\KOKOMO\S21082 NORTH SIDE INTERCEPTOR DESIGN\06 CAD\A CURRENT FILES\ DRAWINGS\07 - S21082 - CROSS SECTIONS.DWG
Saved: 8/13/2025 7:16:11 AM Plotted: 8/13/2025 11:50:51 AM Current User: Brian Waterman LastSavedBy: ekleinrichert

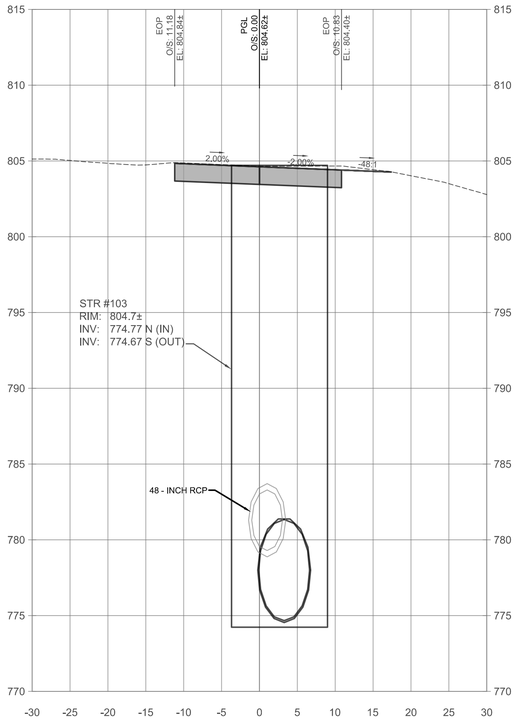

5+06

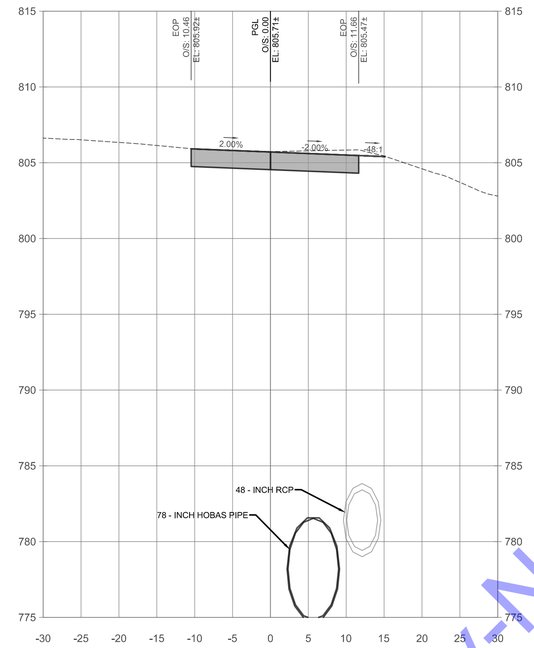

6+00

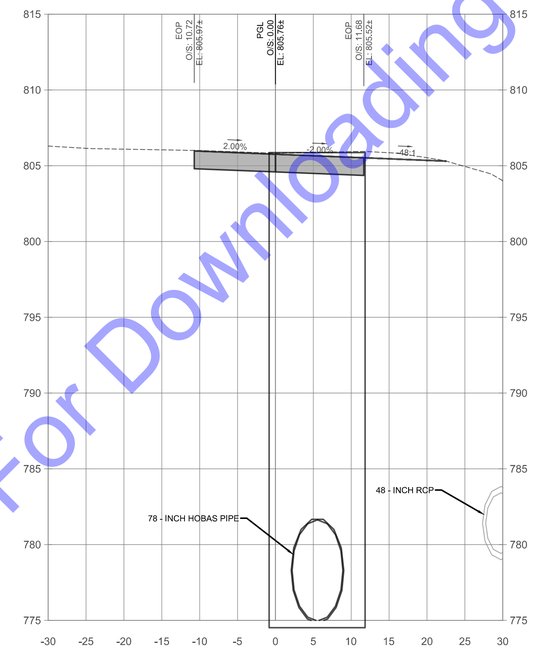

7+00

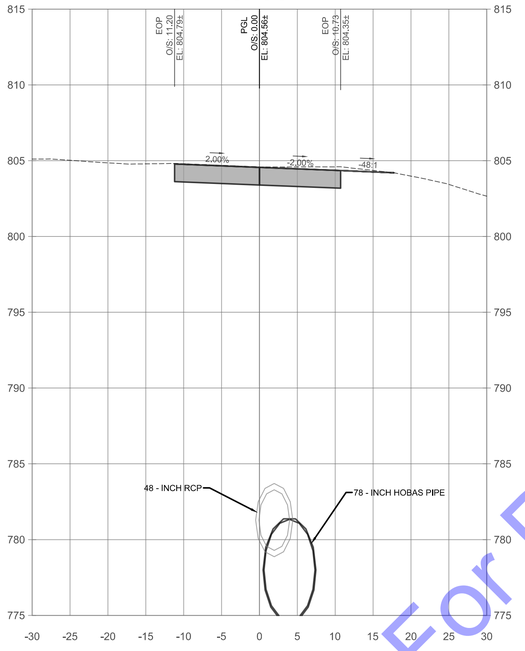

5+00

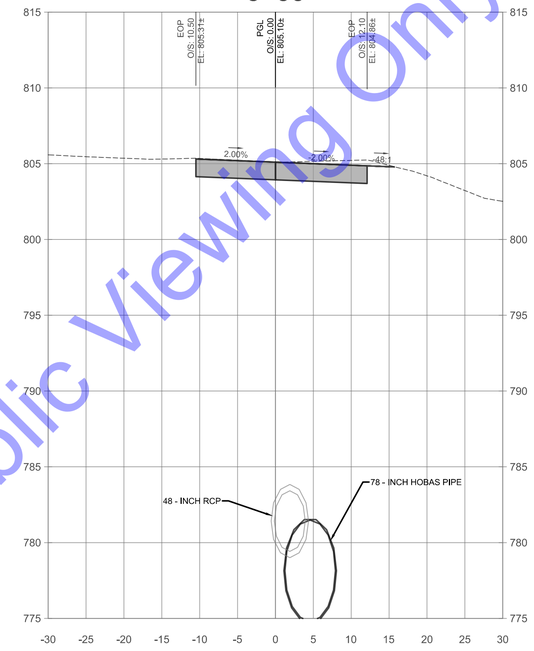

5+50

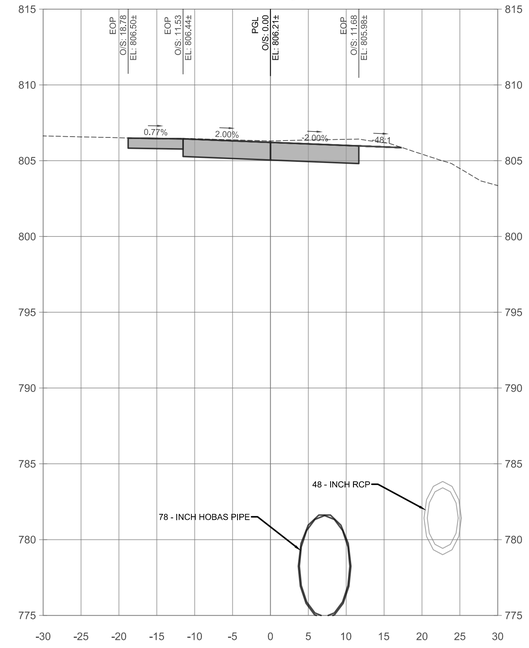

6+50

CREEKSTONE DR - CROSS SECTIONS

SCALE: 1"=10'-0" HORIZONTAL
1"=5'-0" VERTICAL

CROSS SECTION LEGEND
FINISH GRADE
EXISTING GRADE

For Public Viewing Only-Not For Downloading

COMMONWEALTH ENGINEERS, INC.
A wealth of resources to master a common goal.
https://commonwealthengineers.com/

BRIAN KREED WILSON
REGISTERED
No. PE11900866
STATE OF INDIANA
PROFESSIONAL ENGINEER
Signature 8/15/2025 Date

CITY OF KOKOMO, INDIANA
HOWARD COUNTY

NORTH SIDE INTERCEPTOR IMPROVEMENTS PROJECT

© 2025 BY COMMONWEALTH ENGINEERS, INC. ALL RIGHTS RESERVED. REPRODUCTION BY ANY METHOD IN WHOLE OR IN PART WITHOUT PERMISSION IS PROHIBITED

Know what's below. Call before you dig.
1-800-382-5544 (ITS THE LAW)

No.	Submittal/Revision	By	Date

Designed By:	Drawn By:	Checked By:
BW	BW/CH/EK	JH
Issue Date: 8/2025	Project No: S21082	Scale: AS SHOWN

CREEKSTONE DR
CROSS SECTIONS

Drawing No:
XS7
Sheet: 70 OF 137

File: Z:\SHARED\IN CLIENTS A-L\KOKOMO\S21082 NORTH SIDE INTERCEPTOR DESIGN\06 CAD\A CURRENT FILES\1 DRAWINGS\07 - S21082 - CROSS SECTIONS.DWG
Saved: 8/13/2025 7:16:11 AM Plotted: 8/13/2025 11:52:16 AM Current User: Brian Waterman LastSavedBy: eklein richert

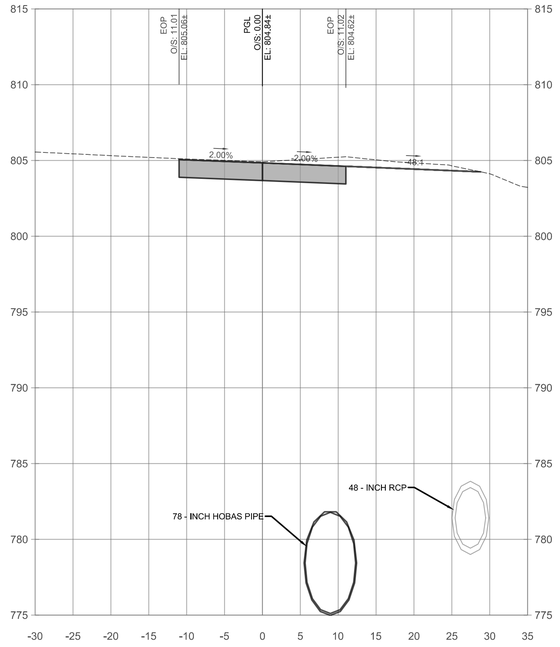

7+50

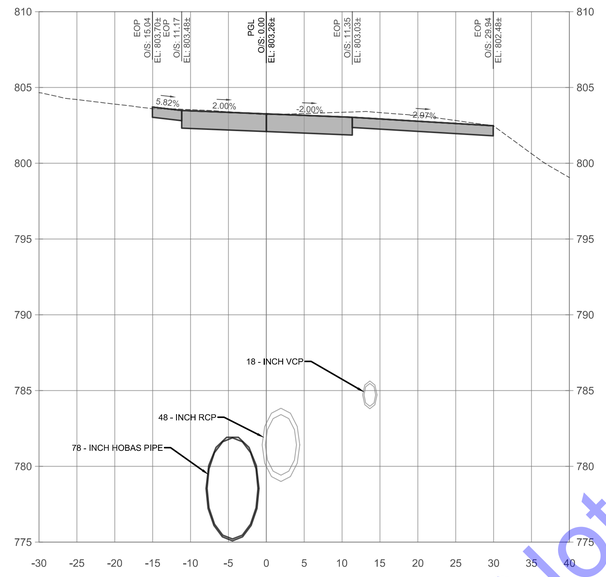

8+50

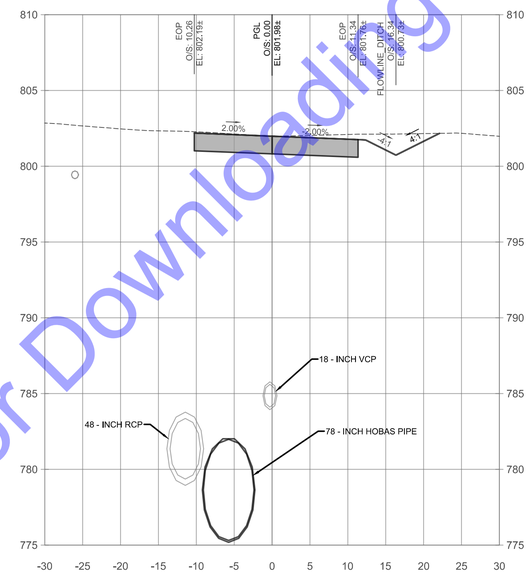

9+50

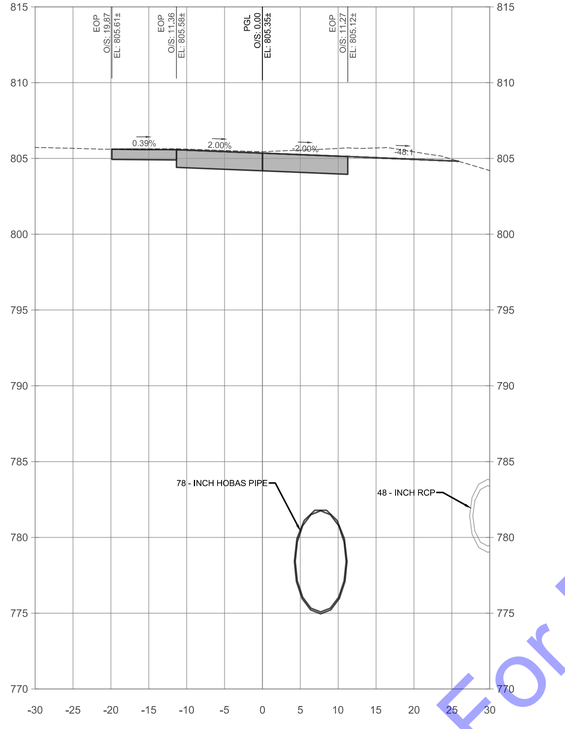

7+19

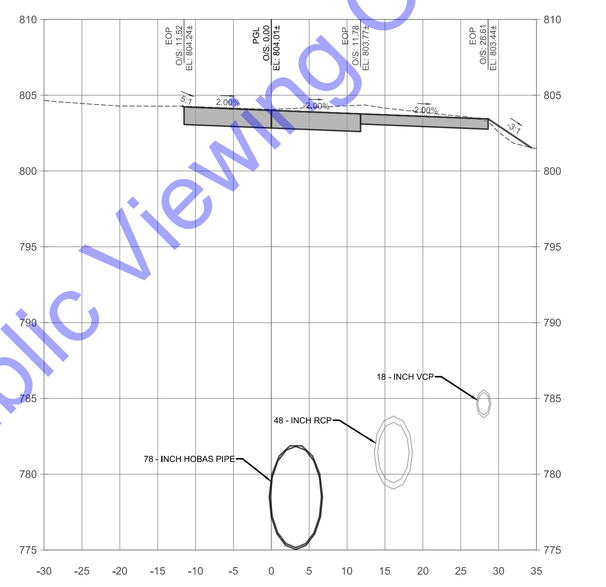

8+00

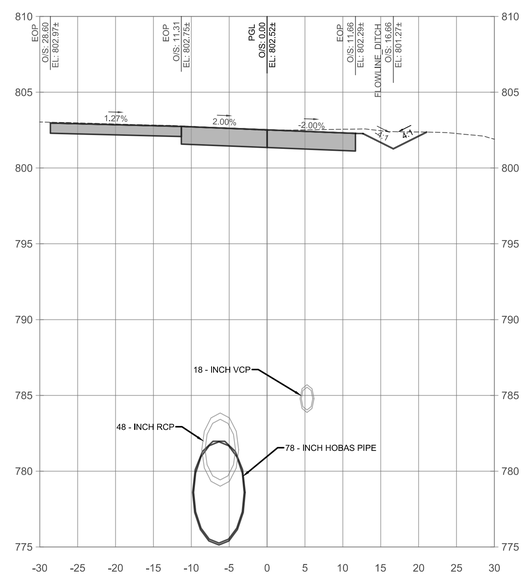

9+00

CREEKSTONE DR - CROSS SECTIONS

SCALE: 1"=10'-0" HORIZONTAL
1"=5'-0" VERTICAL

CROSS SECTION LEGEND
FINISH GRADE
EXISTING GRADE

For Public Viewing Only-Not For Downloading

COMMONWEALTH ENGINEERS, INC.
A wealth of resources to master a common goal.
https://commonwealthengineers.com/

BRIAN KREED WILSON
REGISTERED
No. PE11900866
STATE OF
INDIANA
PROFESSIONAL ENGINEER
Brian Wilson
Signature
8/15/2025
Date

CITY OF KOKOMO, INDIANA
HOWARD COUNTY

NORTH SIDE INTERCEPTOR
IMPROVEMENTS PROJECT

© 2025 BY COMMONWEALTH ENGINEERS, INC. ALL RIGHTS RESERVED. REPRODUCTION BY ANY METHOD IN WHOLE OR IN PART WITHOUT PERMISSION IS PROHIBITED

Know what's below. Call before you dig.
1-800-382-5544
(ITS THE LAW)

No.	Submittal / Revision	By	Date

Designed By:	Drawn By:	Checked By:
BW	BW/CH/EK	JH
Issue Date:	Project No:	Scale:
8/2025	S21082	AS SHOWN

CREEKSTONE DR
CROSS SECTIONS

Drawing No:
XS8
Sheet: 71 OF 137

File: Z:\SHARED\IN CLIENTS A-L\KOKOMO\S21082 NORTH SIDE INTERCEPTOR DESIGN\06 CAD\A CURRENT FILES\1 DRAWINGS\07 - S21082 - CROSS SECTIONS.DWG
Saved: 8/13/2025 7:16:11 AM Plotted: 8/13/2025 11:53:40 AM Current User: Brian Waterman LastSavedBy: ekleinrichert

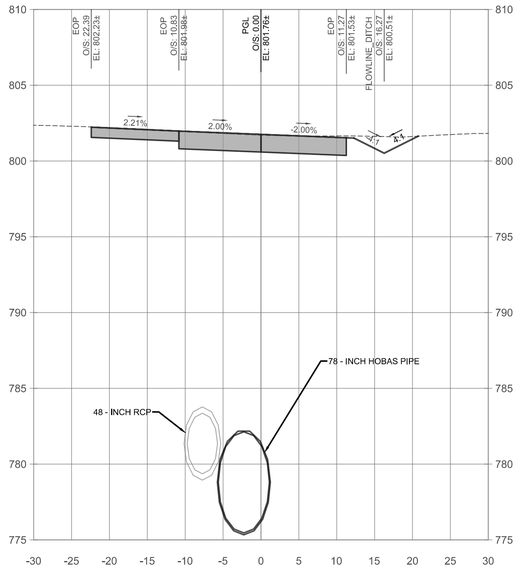

10+02

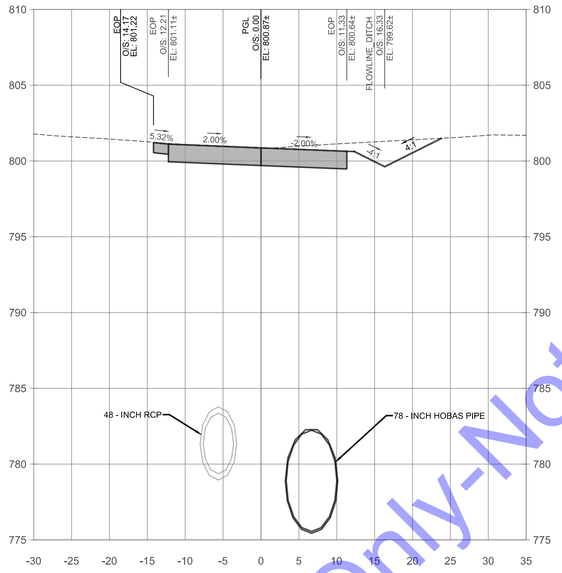

11+00

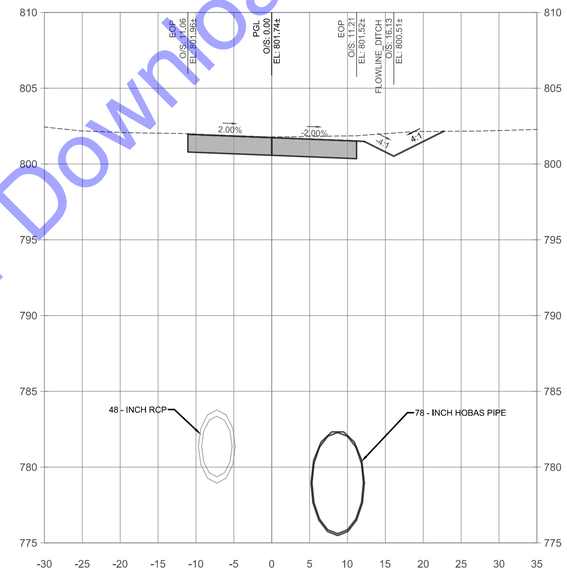

11+50

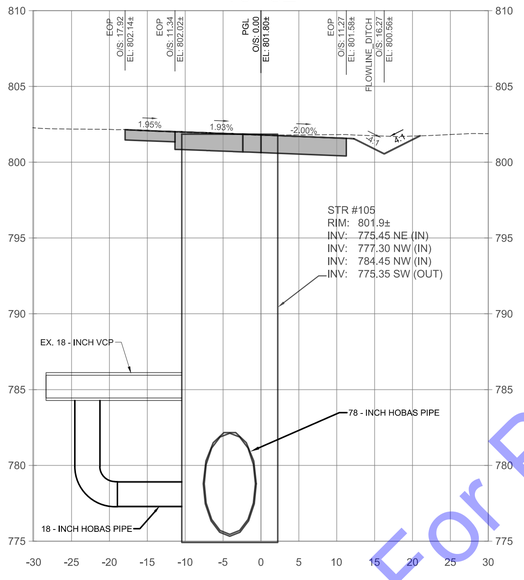

9+89

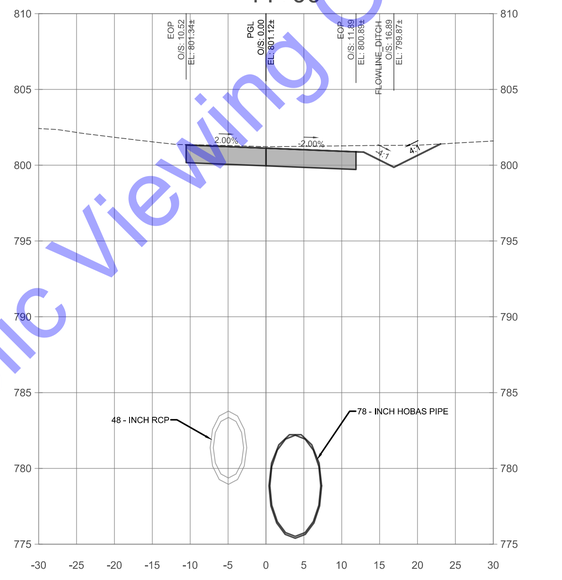

10+50

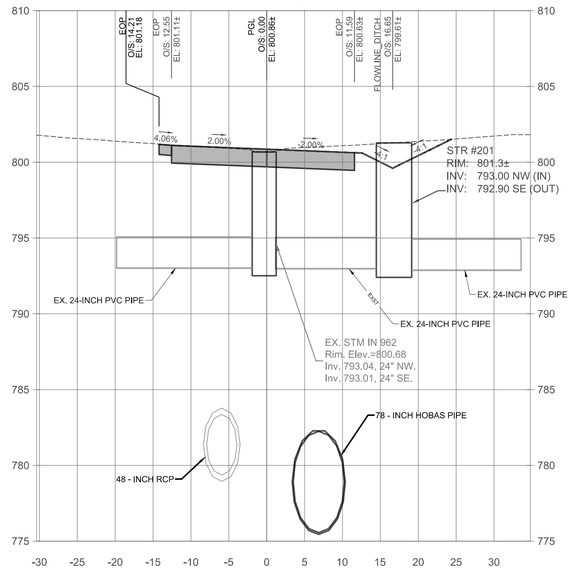

11+06

CREEKSTONE DR - CROSS SECTIONS

SCALE: 1"=10'-0" HORIZONTAL
1"=5'-0" VERTICAL

CROSS SECTION LEGEND
FINISH GRADE
EXISTING GRADE

For Public Viewing Only-Not For Downloading

COMMONWEALTH ENGINEERS, INC.
A wealth of resources to master a common goal.
https://commonwealthengineers.com/

BRIAN KREED WILSON
REGISTERED
No. PE11900866
STATE OF INDIANA
PROFESSIONAL ENGINEER
Brian Wilson
Signature
8/15/2025
Date

CITY OF KOKOMO, INDIANA
HOWARD COUNTY

NORTH SIDE INTERCEPTOR
IMPROVEMENTS PROJECT

© 2025 BY COMMONWEALTH ENGINEERS, INC. ALL RIGHTS RESERVED. REPRODUCTION BY ANY METHOD IN WHOLE OR IN PART WITHOUT PERMISSION IS PROHIBITED

Indiana 811
Know what's below. Call before you dig.
Know what's below. 811 before you dig.
1-800-382-5544
(ITS THE LAW)

No.	Submittal Revision	By	Date

Designed By:	Drawn By:	Checked By:
BW	BW/CH/EK	JH
Issue Date:	Project No:	Scale:
8/2025	S21082	AS SHOWN

CREEKSTONE DR
CROSS SECTIONS

Drawing No:
XS9
Sheet: 72 OF 137

File: Z:\SHARED\N CLIENTS A-L\KOKOMO\S21082 NORTH SIDE INTERCEPTOR DESIGN\06 CAD\A CURRENT FILES\1 DRAWINGS\07 - S21082 - CROSS SECTIONS.DWG
Saved: 8/13/2025 7:16:11 AM Plotted: 8/13/2025 11:55:06 AM Current User: Brian Waterman LastSavedBy: ekleinrichert

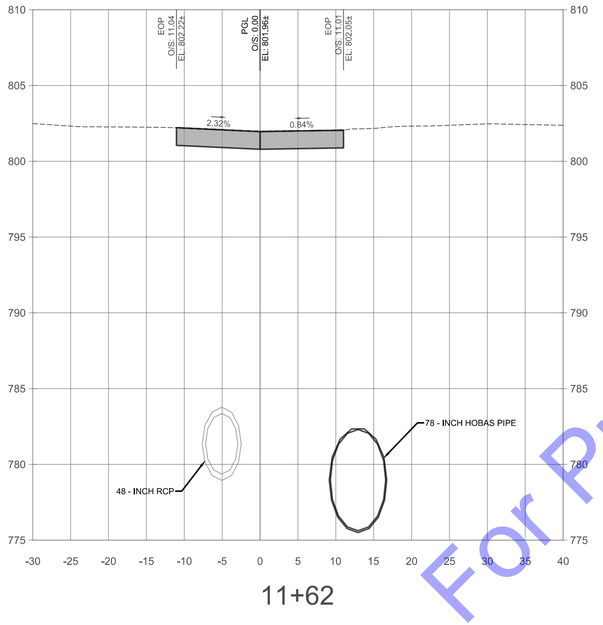

11+62

CREEKSTONE DR - CROSS SECTIONS

SCALE: 1"=10'-0" HORIZONTAL
1"=5'-0" VERTICAL

CROSS SECTION LEGEND
FINISH GRADE
EXISTING GRADE

For Public Viewing Only-Not For Downloading

COMMONWEALTH ENGINEERS, INC.
A wealth of resources to master a common goal.
https://commonwealthengineers.com/

BRIAN KREED WILSON
REGISTERED
No. PE11900866
STATE OF
INDIANA
PROFESSIONAL ENGINEER

Signature 8/15/2025 Date

CITY OF KOKOMO, INDIANA
HOWARD COUNTY

NORTH SIDE INTERCEPTOR
IMPROVEMENTS PROJECT

© 2025 BY COMMONWEALTH ENGINEERS, INC. ALL RIGHTS RESERVED. REPRODUCTION BY ANY METHOD IN WHOLE OR IN PART WITHOUT PERMISSION IS PROHIBITED

Know what's below. Call before you dig.
1-800-382-5544 (ITS THE LAW)

No.	Submittal / Revision	By	Date

Designed By:	Drawn By:	Checked By:
BW	BW/CH/EK	JH
Issue Date: 8/2025	Project No: S21082	Scale: AS SHOWN

CREEKSTONE DR
CROSS SECTIONS

Drawing No:
XS10
Sheet: 73 OF 137

File: Z:\SHARED\IN CLIENTS A-L\KOKOMO\S21082 NORTH SIDE INTERCEPTOR DESIGN\06 CAD\A CURRENT FILES\1 DRAWINGS\07 - S21082 - CROSS SECTIONS.DWG
Saved: 8/13/2025 7:16:11 AM Plotted: 8/13/2025 11:56:33 AM Current User: Brian Waterman LastSavedBy: eklenrichart

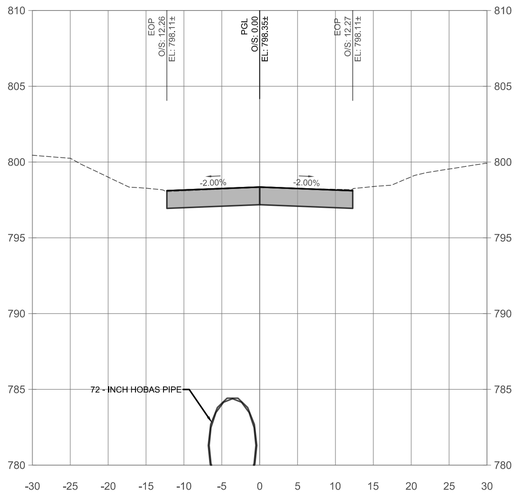

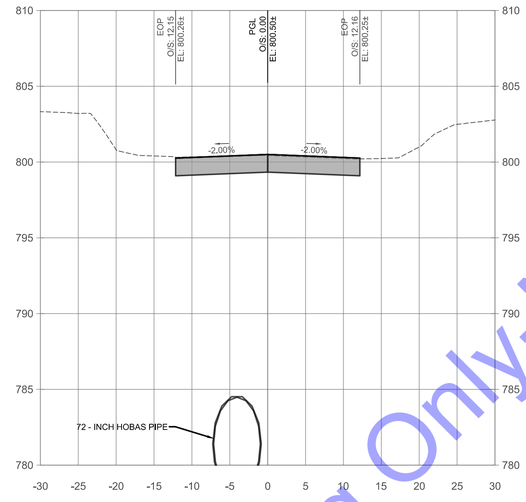

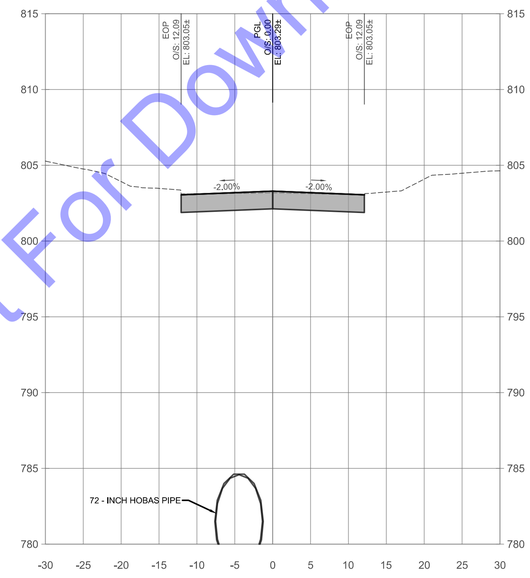

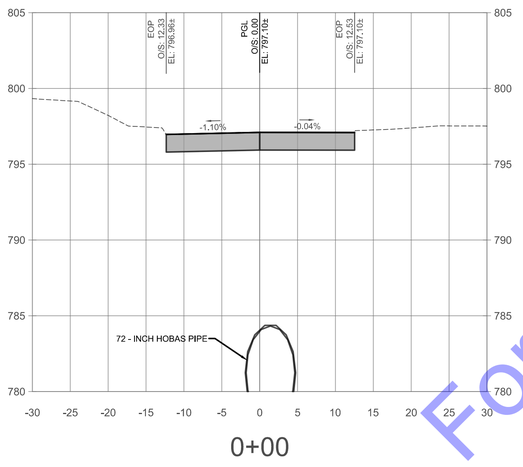

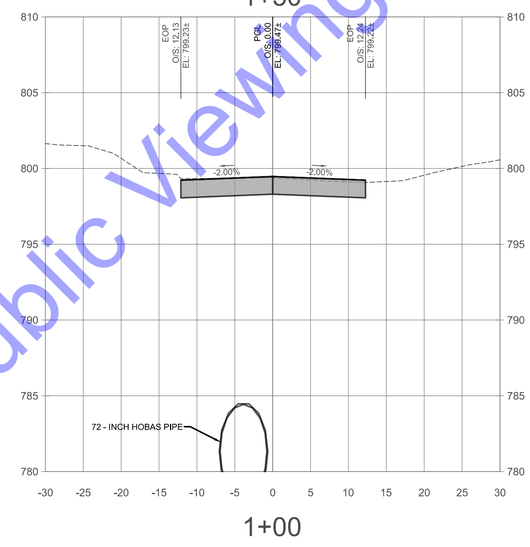

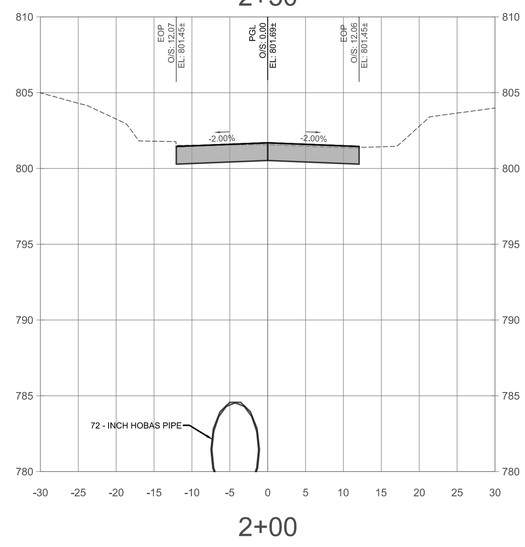

KINGSTON RD - CROSS SECTIONS

SCALE: 1"=10'-0" HORIZONTAL
1"=5'-0" VERTICAL

CROSS SECTION LEGEND
FINISH GRADE
EXISTING GRADE

For Public Viewing Only-Not For Downloading

COMMONWEALTH ENGINEERS, INC.
A wealth of resources to master a common goal.
https://commonwealthengineers.com/

BRIAN KREED WILSON
REGISTERED
No. PE11900866
STATE OF INDIANA
PROFESSIONAL ENGINEER
Signature 8/15/2025 Date

CITY OF KOKOMO, INDIANA
HOWARD COUNTY

NORTH SIDE INTERCEPTOR IMPROVEMENTS PROJECT

© 2025 BY COMMONWEALTH ENGINEERS, INC. ALL RIGHTS RESERVED. REPRODUCTION BY ANY METHOD IN WHOLE OR IN PART WITHOUT PERMISSION IS PROHIBITED

Know what's below. Call before you dig.
1-800-382-5544 (ITS THE LAW)

No.	Submittal / Revision	By	Date

Designed By:	Drawn By:	Checked By:
BW	BW/CH/EK	JH
Issue Date: 8/2025	Project No: S21082	Scale: AS SHOWN

KINGSTON RD CROSS SECTIONS

Drawing No: XS11
Sheet: 74 OF 137

File: Z:\SHARED\IN CLIENTS A-L\KOKOMO\S21082 NORTH SIDE INTERCEPTOR DESIGN\06 CAD\A CURRENT FILES\1 DRAWINGS\07 - S21082 - CROSS SECTIONS.DWG
Saved: 8/13/2025 7:16:11 AM Plotted: 8/13/2025 11:57:55 AM Current User: Brian Waterman LastSavedBy: eleinrichart

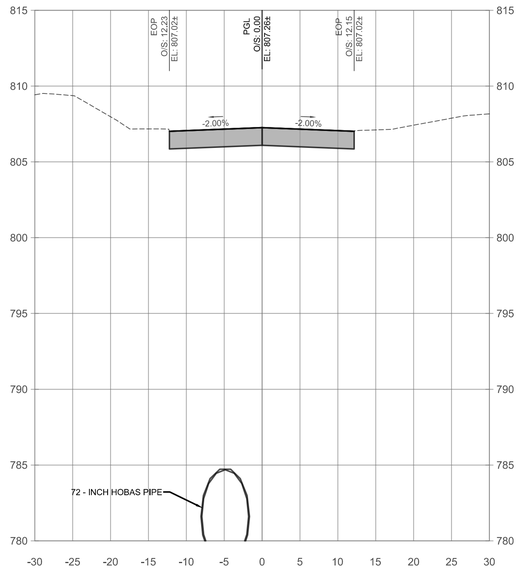

3+50

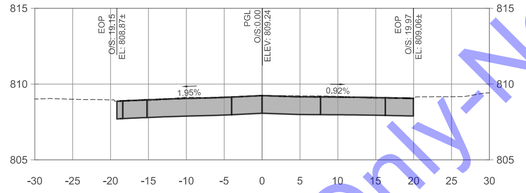

4+50

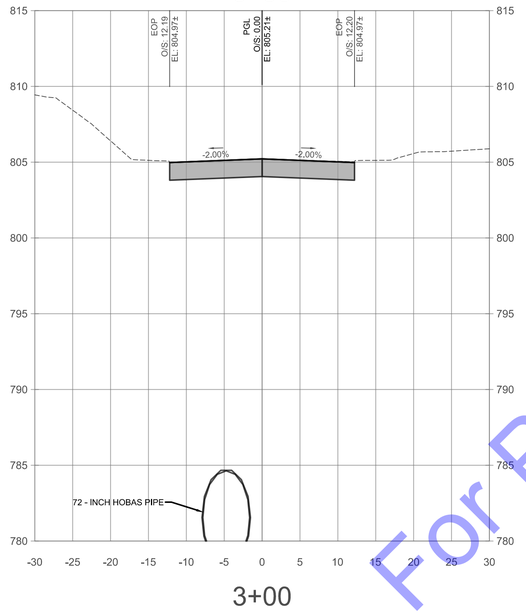

3+00

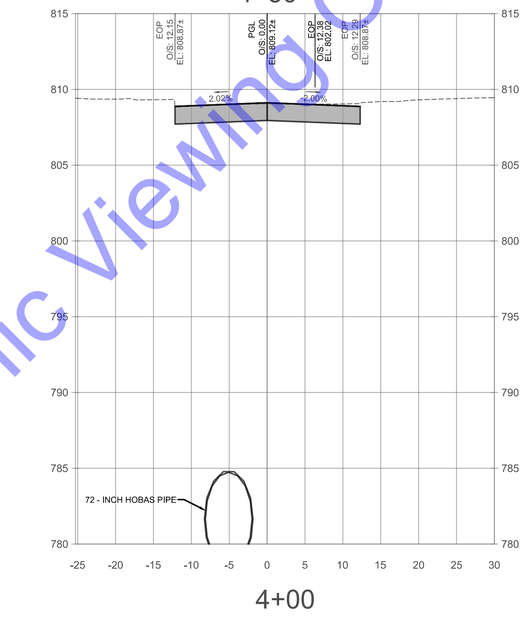

4+00

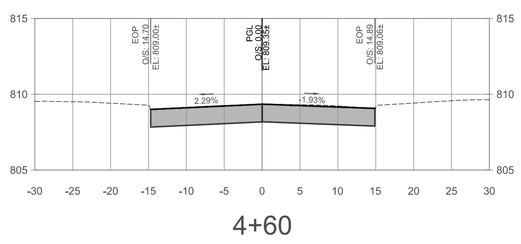

4+60

KINGSTON RD - CROSS SECTIONS

SCALE: 1"=10'-0" HORIZONTAL
1"=5'-0" VERTICAL

CROSS SECTION LEGEND
FINISH GRADE
EXISTING GRADE

For Public Viewing Only-Not For Downloading

COMMONWEALTH ENGINEERS, INC.
A wealth of resources to master a common goal.
https://commonwealthengineers.com/

BRIAN KREED WILSON
REGISTERED
No. PE11900866
STATE OF
INDIANA
PROFESSIONAL ENGINEER

Signature 8/15/2025 Date

CITY OF KOKOMO, INDIANA
HOWARD COUNTY

NORTH SIDE INTERCEPTOR
IMPROVEMENTS PROJECT

© 2025 BY COMMONWEALTH ENGINEERS, INC. ALL RIGHTS RESERVED. REPRODUCTION OF ANY METHOD IN WHOLE OR IN PART WITHOUT PERMISSION IS PROHIBITED

Know what's below. Call before you dig.
1-800-382-5544 (ITS THE LAW)

No.	Submittal / Revision	By	Date

Designed By:	Drawn By:	Checked By:
BW	BW/CH/EK	JH
Issue Date: 8/2025	Project No: S21082	Scale: AS SHOWN

KINGSTON RD CROSS SECTIONS

Drawing No: XS12
Sheet: 75 OF 137

File: Z:\SHARED\IN CLIENTS A-L\KOKOMO\S21082 NORTH SIDE INTERCEPTOR DESIGN\06 CAD\A CURRENT FILES\1 DRAWINGS\07 - S21082 - CROSS SECTIONS.DWG
Saved: 8/13/2025 7:16:11 AM Plotted: 8/13/2025 11:59:17 AM Current User: Brian Waterman LastSavedBy: eklenrichert

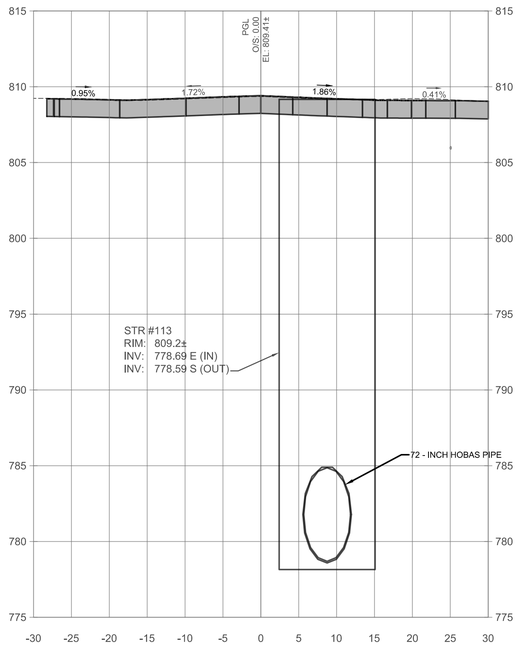

0+25

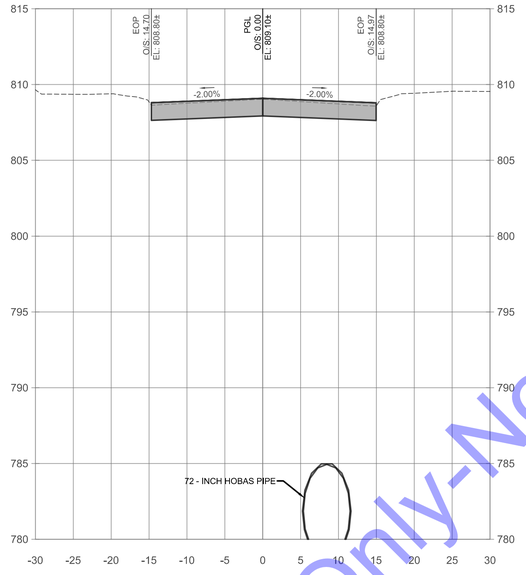

1+00

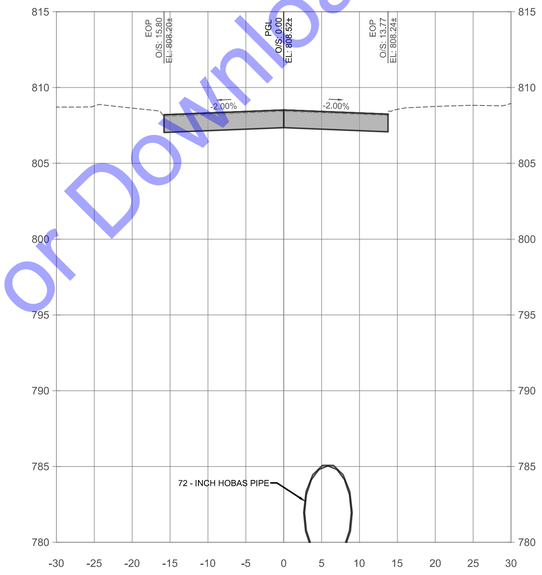

2+00

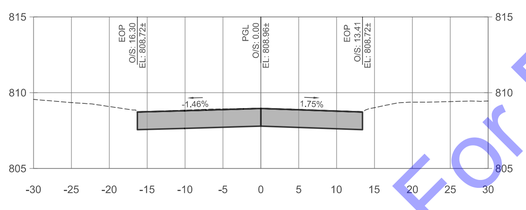

0+01

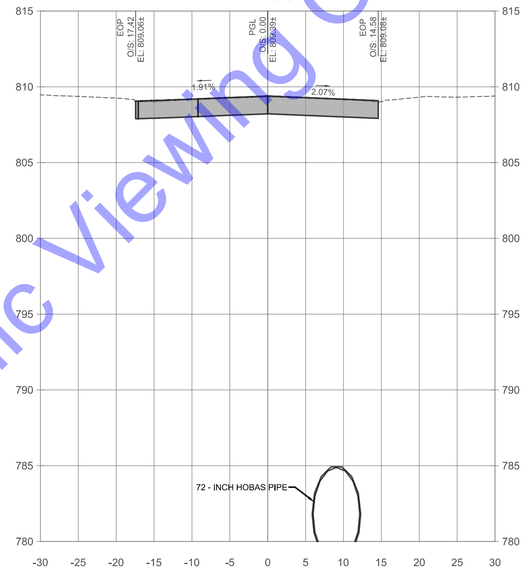

0+50

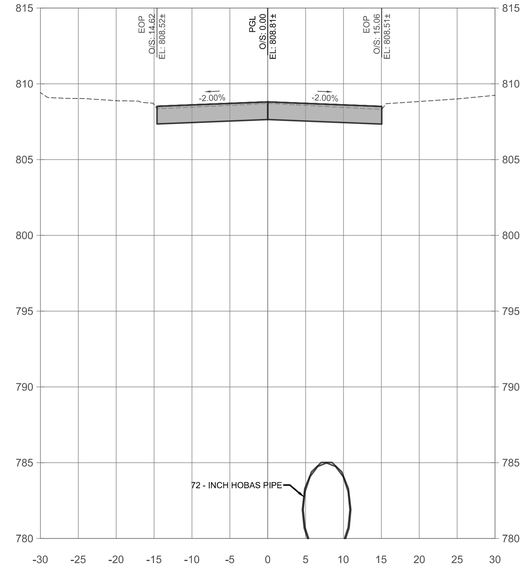

1+50

MAPLE ST - CROSS SECTIONS

SCALE: 1"=10'-0" HORIZONTAL
1"=5'-0" VERTICAL

CROSS SECTION LEGEND
FINISH GRADE
EXISTING GRADE

For Public Viewing Only-Not For Downloading

COMMONWEALTH ENGINEERS, INC.
A wealth of resources to master a common goal.
https://commonwealthengineers.com/

BRIAN KREED WILSON
REGISTERED
No. PE11900866
STATE OF
INDIANA
PROFESSIONAL ENGINEER
Signature 8/15/2025 Date

CITY OF KOKOMO, INDIANA
HOWARD COUNTY

NORTH SIDE INTERCEPTOR
IMPROVEMENTS PROJECT

© 2025 BY COMMONWEALTH ENGINEERS, INC. ALL RIGHTS RESERVED. REPRODUCTION BY ANY METHOD IN WHOLE OR IN PART WITHOUT PERMISSION IS PROHIBITED

Indiana 811 Know what's below. Call before you dig.
Know what's below. 811 before you dig.
1-800-382-5544
(ITS THE LAW)

No.	Submittal Revision	By	Date

Designed By:	Drawn By:	Checked By:
BW	BW/CH/EK	JH
Issue Date: 8/2025	Project No: S21082	Scale: AS SHOWN

MAPLE ST CROSS SECTIONS

Drawing No: XS13
Sheet: 76 OF 137

File: Z:\SHARED\N CLIENTS A-L\KOKOMO\S21082 NORTH SIDE INTERCEPTOR DESIGN\06 CAD\A CURRENT FILES\1 DRAWINGS\07 - S21082 - CROSS SECTIONS.DWG
Saved: 8/13/2025 7:16:11 AM Plotted: 8/13/2025 12:00:43 PM Current User: Brian Waterman LastSavedBy: ekleinrichert

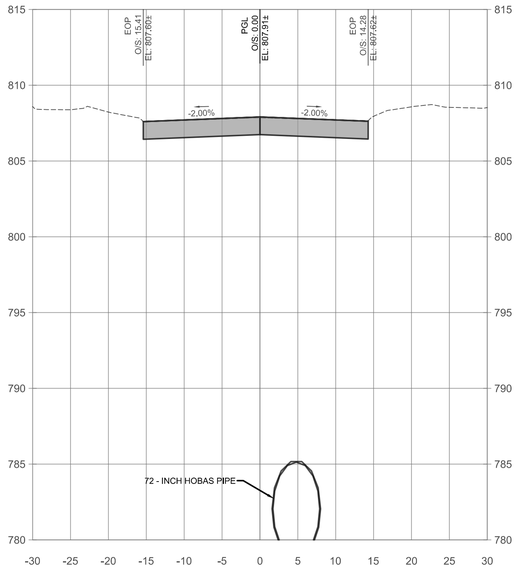

3+00

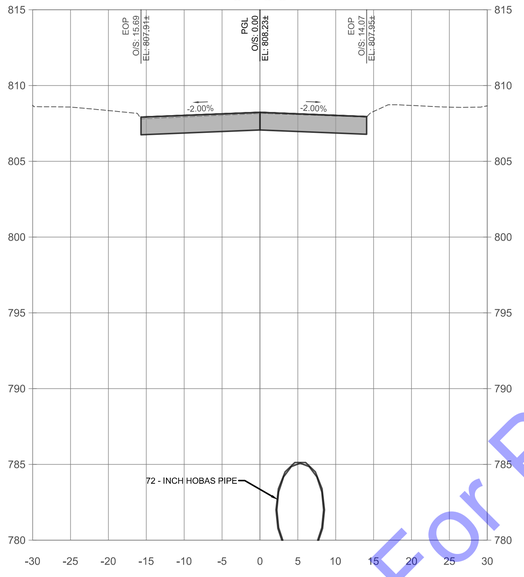

2+50

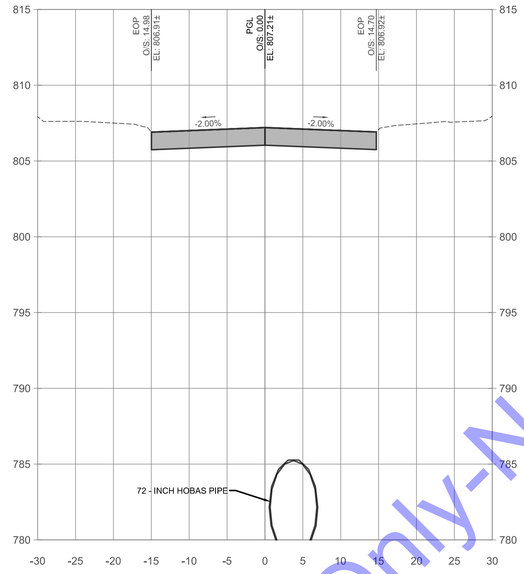

4+00

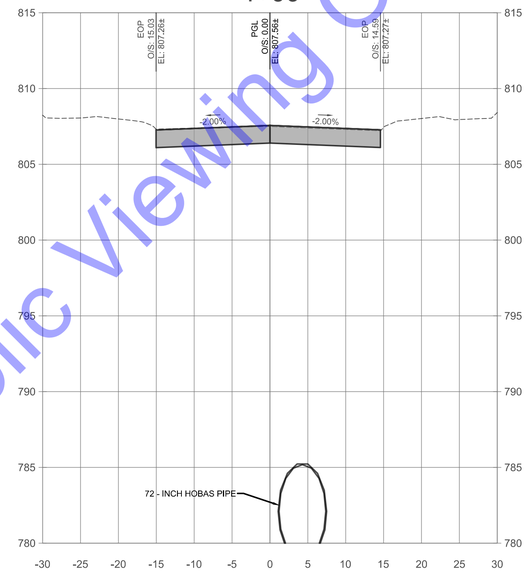

3+50

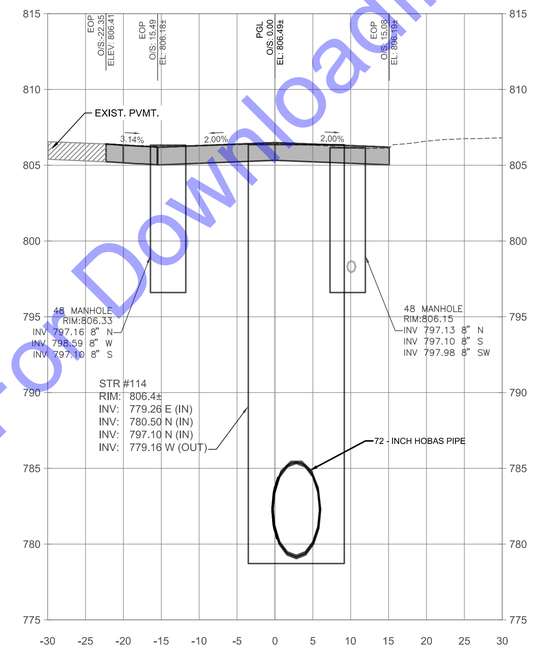

4+92

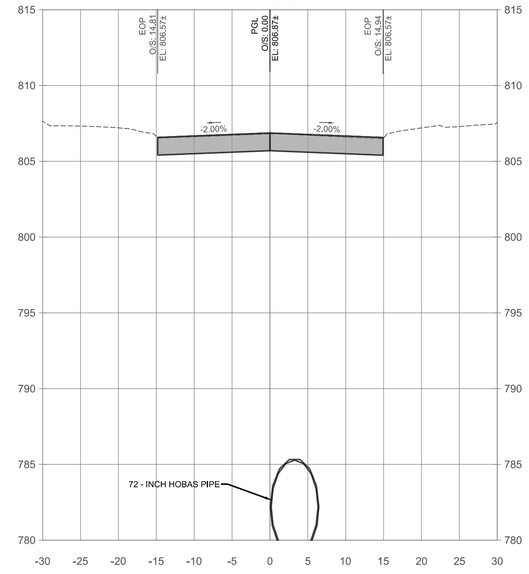

4+50

MAPLE ST - CROSS SECTIONS

SCALE: 1"=10'-0" HORIZONTAL
1"=5'-0" VERTICAL

CROSS SECTION LEGEND
FINISH GRADE
EXISTING GRADE

For Public Viewing Only-Not For Downloading

COMMONWEALTH ENGINEERS, INC.
A wealth of resources to master a common goal.
https://commonwealthengineers.com/

BRIAN KREED WILSON
REGISTERED
No. PE11900866
STATE OF INDIANA
PROFESSIONAL ENGINEER
Signature
8/15/2025
Date

CITY OF KOKOMO, INDIANA
HOWARD COUNTY

NORTH SIDE INTERCEPTOR
IMPROVEMENTS PROJECT

© 2025 BY COMMONWEALTH ENGINEERS, INC. ALL RIGHTS RESERVED. REPRODUCTION BY ANY METHOD IN WHOLE OR IN PART WITHOUT PERMISSION IS PROHIBITED

Indiana811
Know what's below. Call before you dig.
Know what's below. 811 before you dig.
1-800-382-5544
(ITS THE LAW)

No.	Submittal Revision	By	Date

Designed By:	Drawn By:	Checked By:
BW	BW/CH/EK	JH
Issue Date: 8/2025	Project No: S21082	Scale: AS SHOWN

MAPLE ST CROSS SECTIONS

Drawing No:
XS14
Sheet: 77 OF 137

File: Z:\SHARED\IN CLIENTS A-L\KOKOMO\S21082 NORTH SIDE INTERCEPTOR DESIGN\06 CAD\A CURRENT FILES\1 DRAWINGS\07 - S21082 - CROSS SECTIONS.DWG
Saved: 8/13/2025 7:16:11 AM Plotted: 8/13/2025 12:02:05 PM Current User: Brian Waterman LastSavedBy: ekleinrichert

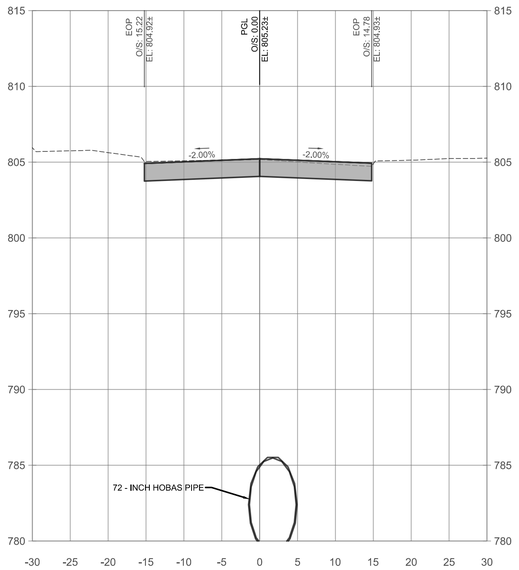

5+50

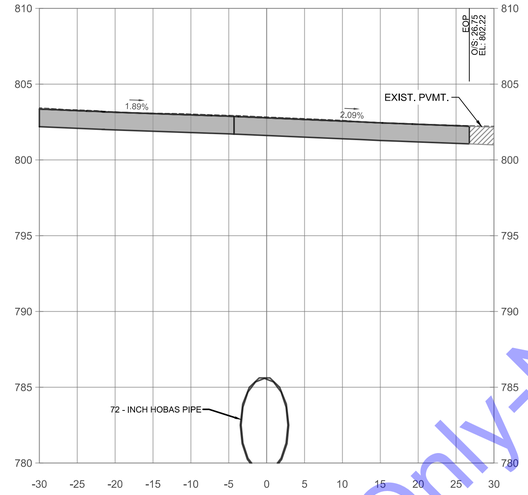

6+50

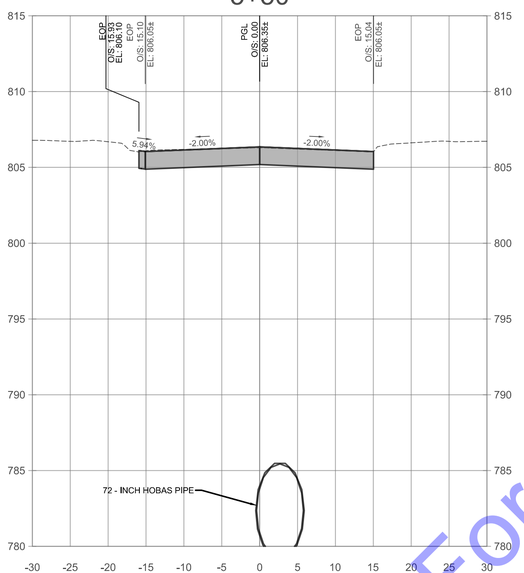

5+00

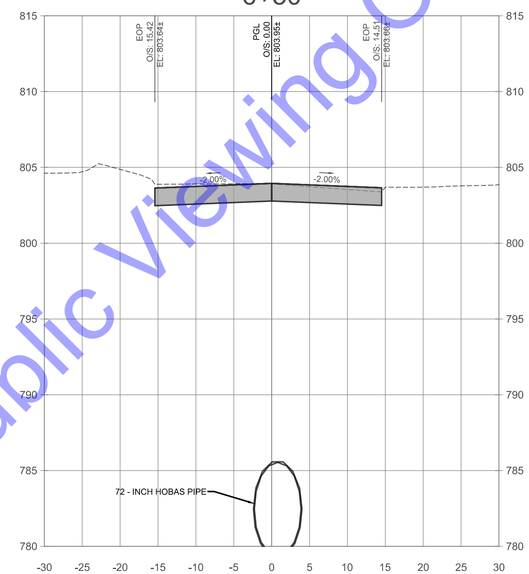

6+00

MAPLE ST - CROSS SECTIONS

SCALE: 1"=10'-0" HORIZONTAL
1"=5'-0" VERTICAL

CROSS SECTION LEGEND
FINISH GRADE
EXISTING GRADE

For Public Viewing Only-Not For Downloading

COMMONWEALTH ENGINEERS, INC.
A wealth of resources to master a common goal.
https://commonwealthengineers.com/

BRIAN KREED WILSON
REGISTERED
No. PE11900866
STATE OF INDIANA
PROFESSIONAL ENGINEER
Signature 8/15/2025 Date

CITY OF KOKOMO, INDIANA
HOWARD COUNTY

NORTH SIDE INTERCEPTOR
IMPROVEMENTS PROJECT

© 2025 BY COMMONWEALTH ENGINEERS, INC. ALL RIGHTS RESERVED. REPRODUCTION, BY ANY METHOD IN WHOLE OR IN PART WITHOUT PERMISSION IS PROHIBITED

Indiana 811 Know what's below. Call before you dig.
Know what's below. 811 before you dig.
1-800-382-5544 (ITS THE LAW)

No.	Submittal / Revision	By	Date

Designed By:	Drawn By:	Checked By:
BW	BW/CH/EK	JH
Issue Date: 8/2025	Project No: S21082	Scale: AS SHOWN

MAPLE ST CROSS SECTIONS

Drawing No: XS15
Sheet: 78 OF 137

File: Z:\SHARED\IN CLIENTS A-L\KOKOMO\S21082 NORTH SIDE INTERCEPTOR DESIGN\06 CAD\A CURRENT FILES\1 DRAWINGS\07 - S21082 - CROSS SECTIONS.DWG
Saved: 8/13/2025 7:16:11 AM Plotted: 8/13/2025 12:03:24 PM Current User: Brian Waterman LastSavedBy: eklein1chert

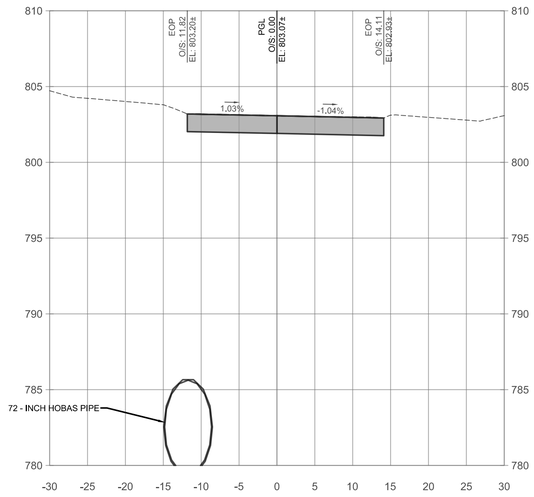

0+25

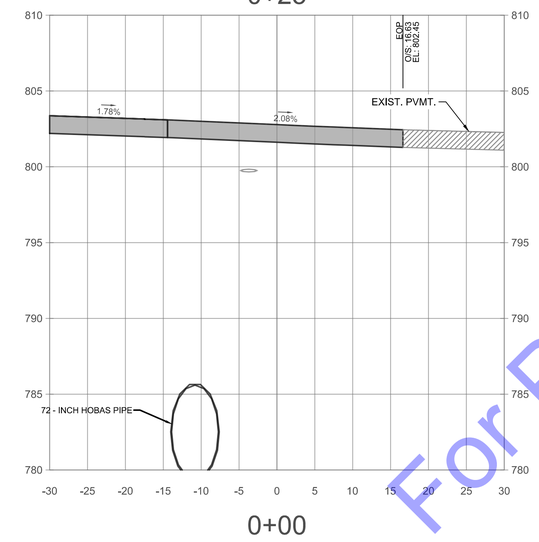

0+00

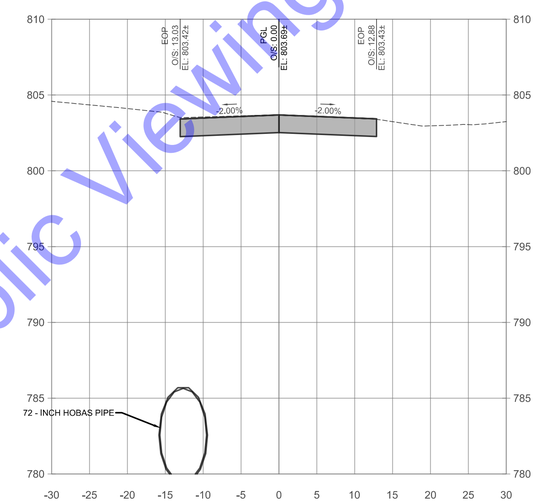

0+50

MAPLE ST - CROSS SECTIONS

SCALE: 1"=10'-0" HORIZONTAL
1"=5'-0" VERTICAL

CROSS SECTION LEGEND

FINISH GRADE

EXISTING GRADE

For Public Viewing Only-Not For Downloading

COMMONWEALTH ENGINEERS, INC.
A wealth of resources to master a common goal.
https://commonwealthengineers.com/

BRIAN KREED WILSON
REGISTERED
No. PE11900866
STATE OF
INDIANA
PROFESSIONAL ENGINEER

Brian Wilson 8/15/2025
Signature Date

CITY OF KOKOMO, INDIANA
HOWARD COUNTY

NORTH SIDE INTERCEPTOR
IMPROVEMENTS PROJECT

© 2025 BY COMMONWEALTH ENGINEERS, INC. ALL RIGHTS RESERVED. REPRODUCTION BY ANY METHOD IN WHOLE OR IN PART WITHOUT PERMISSION IS PROHIBITED

Indiana811
Know what's below. Call before you dig.
Know what's below. 811 before you dig.
1-800-382-5544
(ITS THE LAW)

No.	Submittal / Revision	By	Date

Designed By:	Drawn By:	Checked By:
BW	BW/CH/EK	JH
Issue Date:	Project No:	Scale:
8/2025	S21082	AS SHOWN

MAPLE ST CROSS SECTIONS

Drawing No:
XS16

Sheet: 79 OF 137

File: Z:\SHARED\IN CLIENTS A-L\KOKOMO\S21082 NORTH SIDE INTERCEPTOR DESIGN\06 CAD\A CURRENT FILES\1 DRAWINGS\07 - S21082 - CROSS SECTIONS.DWG
Saved: 8/13/2025 7:16:11 AM Plotted: 8/13/2025 12:04:44 PM Current User: Brian Waterman LastSavedBy: ekleinrichert

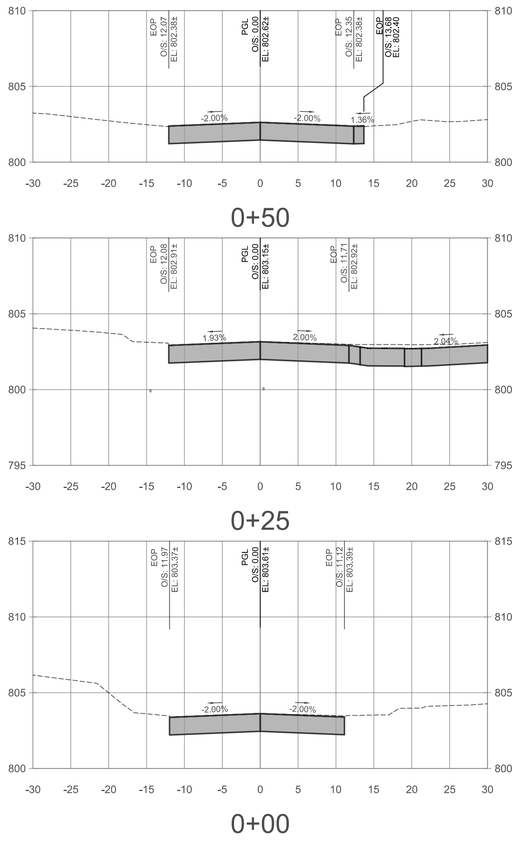

MCCANN ST - CROSS SECTIONS

SCALE: 1"=10'-0" HORIZONTAL
1"=5'-0" VERTICAL

CROSS SECTION LEGEND
FINISH GRADE
EXISTING GRADE

For Public Viewing Only-Not For Downloading

COMMONWEALTH ENGINEERS, INC.
A wealth of resources to master a common goal.
https://commonwealthengineers.com/

BRIAN KREED WILSON
REGISTERED
No. PE11900866
STATE OF
INDIANA
PROFESSIONAL ENGINEER
Signature 8/15/2025 Date

CITY OF KOKOMO, INDIANA
HOWARD COUNTY

NORTH SIDE INTERCEPTOR
IMPROVEMENTS PROJECT

© 2025 BY COMMONWEALTH ENGINEERS, INC. ALL RIGHTS RESERVED. REPRODUCTION BY ANY METHOD IN WHOLE OR IN PART WITHOUT PERMISSION IS PROHIBITED

Know what's below. Call before you dig.
Know what's below. 811 before you dig.
1-800-382-5544
(ITS THE LAW)

No.	Submittal / Revision	By	Date

Designed By:	Drawn By:	Checked By:
BW	BW/CH/EK	JH
Issue Date:	Project No:	Scale:
8/2025	S21082	AS SHOWN

CROSS SECTIONS - MCCANN ST

Drawing No:
XS17
Sheet: 80 OF 137

File: Z:\SHARED\IN CLIENTS A-L\KOKOMO\S21082 NORTH SIDE INTERCEPTOR DESIGN\06 CAD\A CURRENT FILES\1 DRAWINGS\07 - S21082 - CROSS SECTIONS.DWG
Saved: 8/13/2025 7:16:11 AM Plotted: 8/13/2025 12:06:09 PM Current User: Brian Waterman LastSavedBy: aleinrichert

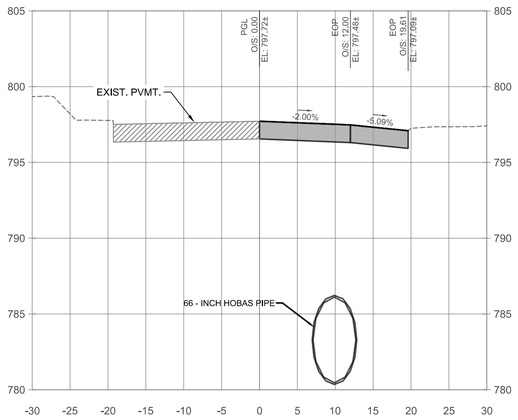

0+50

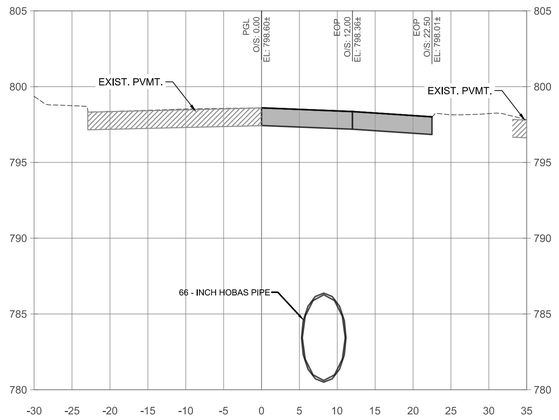

2+00

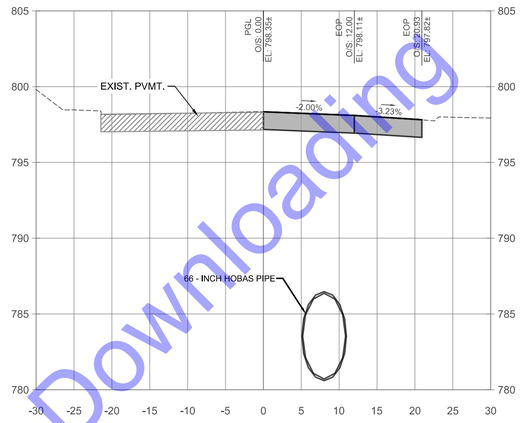

3+00

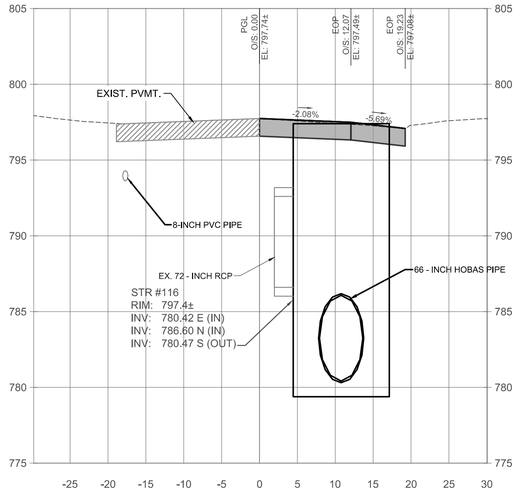

0+12

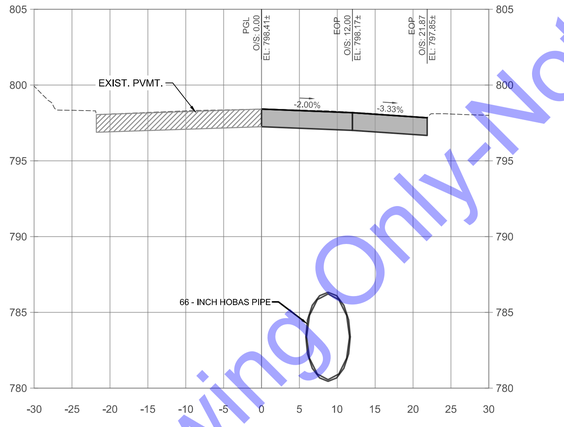

1+50

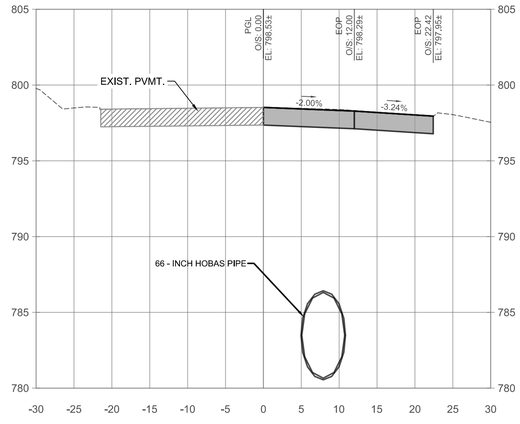

2+50

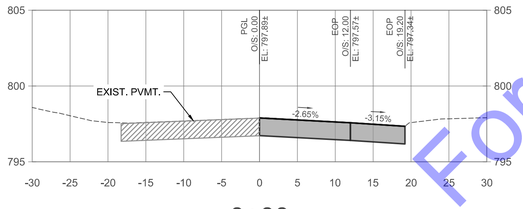

0+00

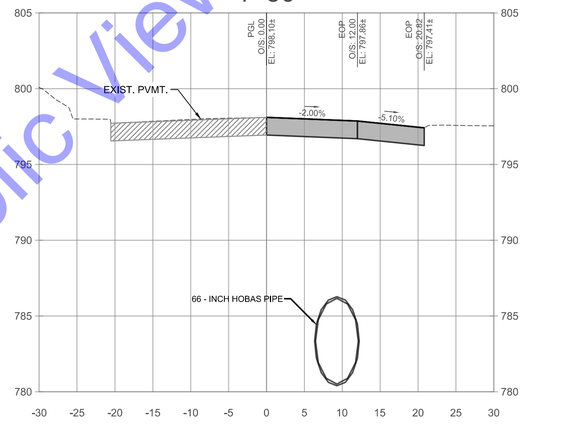

1+00

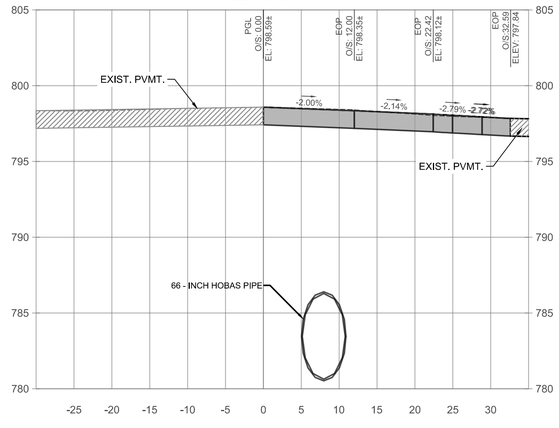

2+23

SUPERIOR ST - CROSS SECTIONS

SCALE: 1"=10'-0" HORIZONTAL
1"=5'-0" VERTICAL

CROSS SECTION LEGEND
FINISH GRADE
EXISTING GRADE

For Public Viewing Only-Not For Downloading

COMMONWEALTH ENGINEERS, INC.
A wealth of resources to master a common goal.
https://commonwealthengineers.com/

BRIAN KREED WILSON
REGISTERED
No. PE11900866
STATE OF
INDIANA
PROFESSIONAL ENGINEER
Signature 8/15/2025 Date

CITY OF KOKOMO, INDIANA
HOWARD COUNTY

NORTH SIDE INTERCEPTOR IMPROVEMENTS PROJECT

© 2025 BY COMMONWEALTH ENGINEERS, INC. ALL RIGHTS RESERVED. REPRODUCTION BY ANY METHOD IN WHOLE OR IN PART WITHOUT PERMISSION IS PROHIBITED

Know what's below. Call before you dig.
Know what's below. 811 before you dig.
1-800-382-5544
(ITS THE LAW)

No.	Submittal/ Revision	By	Date

Designed By:	Drawn By:	Checked By:
BW	BW/CH/EK	JH
Issue Date:	Project No:	Scale:
8/2025	S21082	AS SHOWN

CROSS SECTIONS - SUPERIOR ST

Drawing No:
XS18
Sheet: 81 OF 137

File: Z:\SHARED\IN CLIENTS A-L\KOKOMO\S21082 NORTH SIDE INTERCEPTOR DESIGN\06 CAD\A CURRENT FILES\1 DRAWINGS\07 - S21082 - CROSS SECTIONS.DWG
Saved: 8/13/2025 7:16:11 AM Plotted: 8/13/2025 12:07:35 PM Current User: Brian Waterman LastSavedBy: aleinrichert

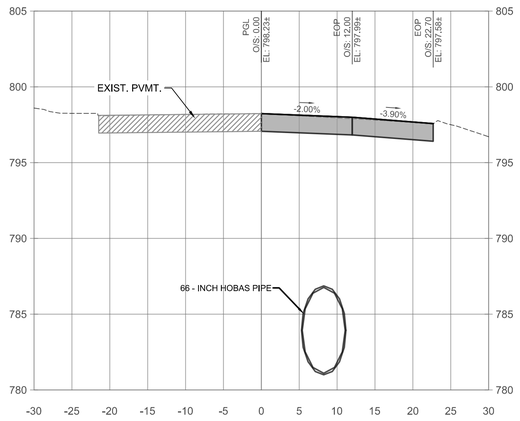

4+00

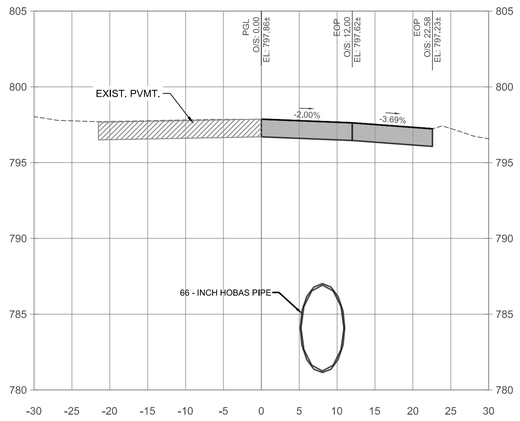

5+50

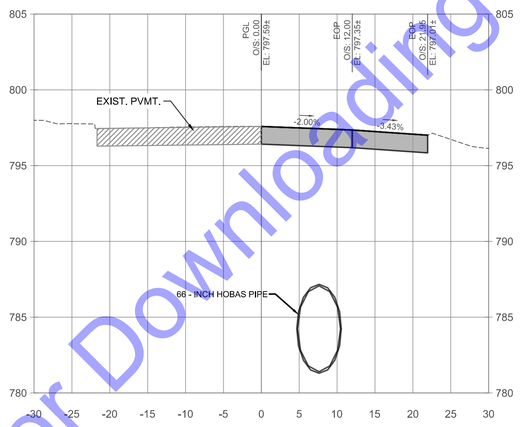

7+00

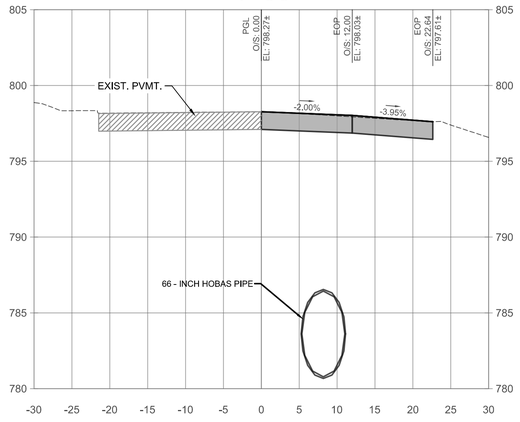

3+74

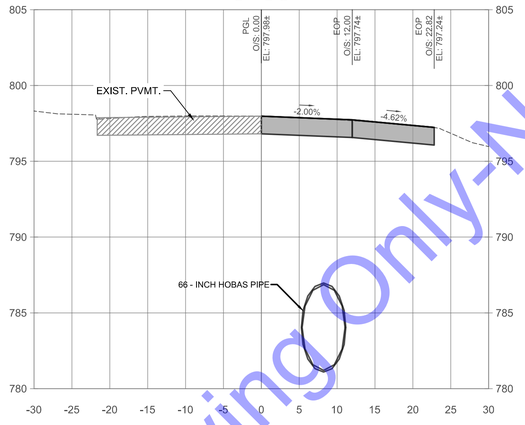

5+00

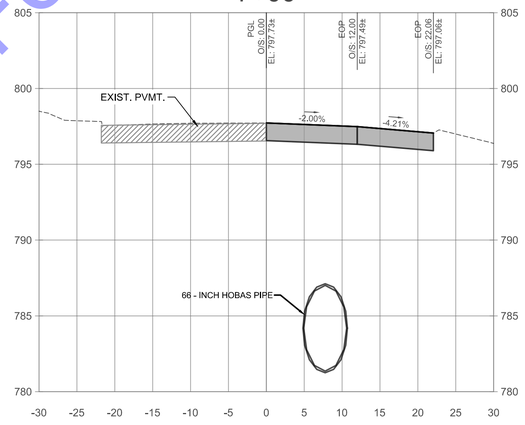

6+50

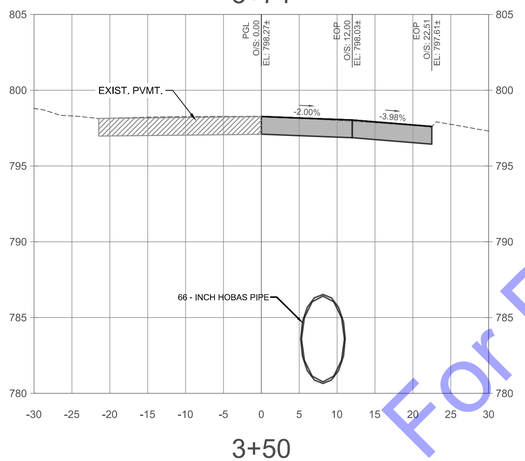

3+50

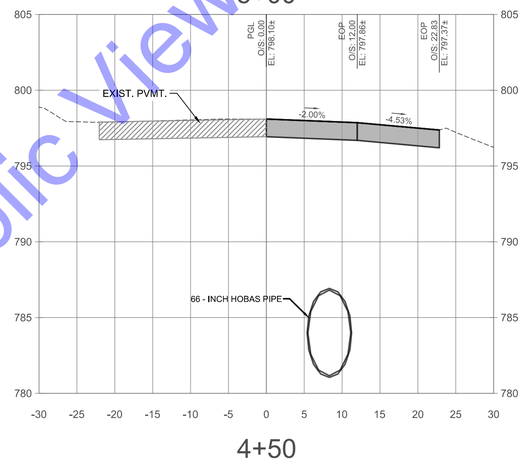

4+50

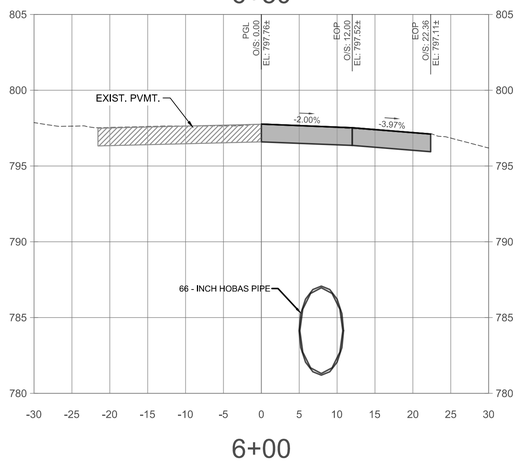

6+00

CROSS SECTIONS - SUPERIOR ST

SCALE: 1"=10'-0" HORIZONTAL
1"=5'-0" VERTICAL

CROSS SECTION LEGEND
FINISH GRADE
EXISTING GRADE

For Public Viewing Only-Not For Downloading

COMMONWEALTH ENGINEERS, INC.
A wealth of resources to master a common goal.
https://commonwealthengineers.com/

BRIAN KREED WILSON
REGISTERED
No. PE11900866
STATE OF
INDIANA
PROFESSIONAL ENGINEER
Signature
8/15/2025
Date

CITY OF KOKOMO, INDIANA
HOWARD COUNTY

NORTH SIDE INTERCEPTOR
IMPROVEMENTS PROJECT

© 2025 BY COMMONWEALTH ENGINEERS, INC. ALL RIGHTS RESERVED. REPRODUCTION, BY ANY METHOD IN WHOLE OR IN PART WITHOUT PERMISSION IS PROHIBITED

Know what's below. Call before you dig.
Know what's below. 811 before you dig.
1-800-382-5544
(ITS THE LAW)

No.	Submittal / Revision	By	Date

Designed By:	Drawn By:	Checked By:
BW	BW/CH/EK	JH
Issue Date:	Project No:	Scale:
8/2025	S21082	AS SHOWN

CROSS SECTIONS - SUPERIOR ST

Drawing No:
XS19
Sheet: 82 OF 137

File: Z:\SHARED\IN CLIENTS A-L\KOKOMO\S21082 NORTH SIDE INTERCEPTOR DESIGN\06 CAD\A CURRENT FILES\1 DRAWINGS\07 - S21082 - CROSS SECTIONS.DWG
Saved: 8/13/2025 7:16:11 AM Plotted: 8/13/2025 12:08:54 PM Current User: Brian Waterman LastSavedBy: aleinrichert

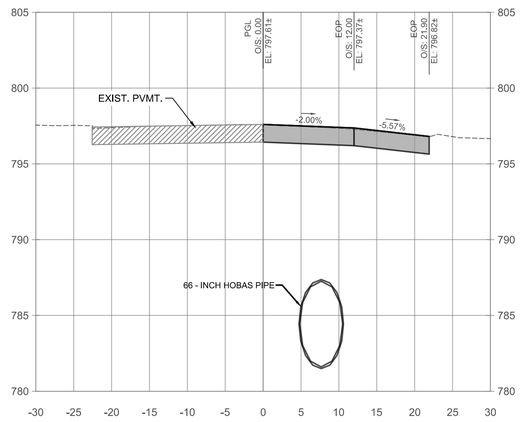

8+00

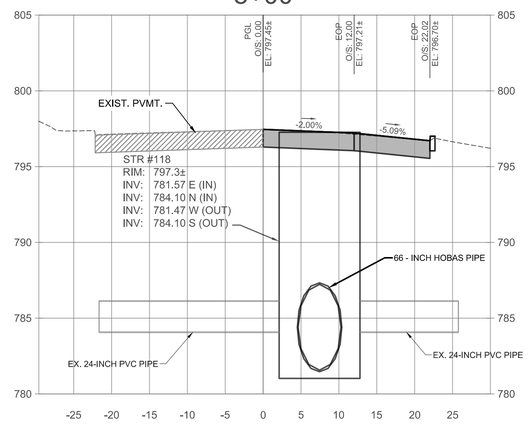

7+63

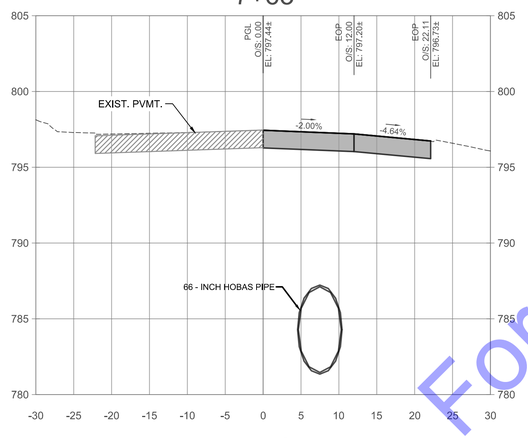

7+50

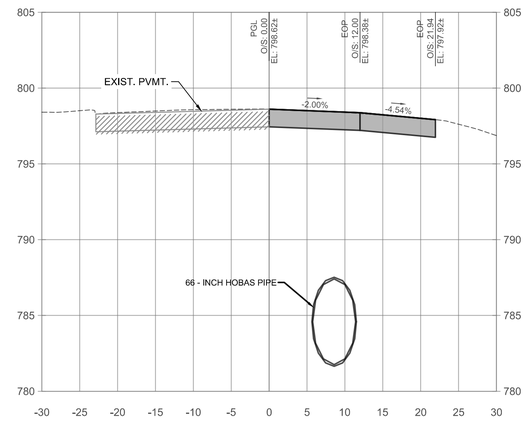

9+50

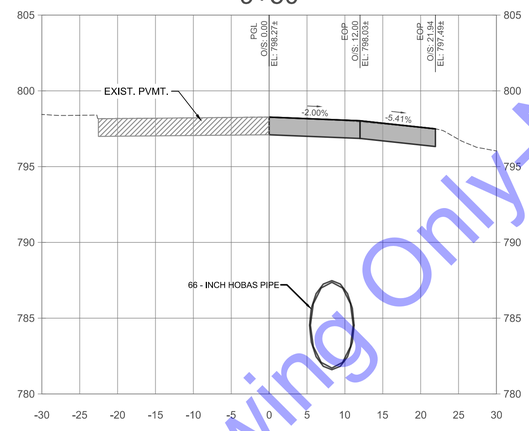

9+00

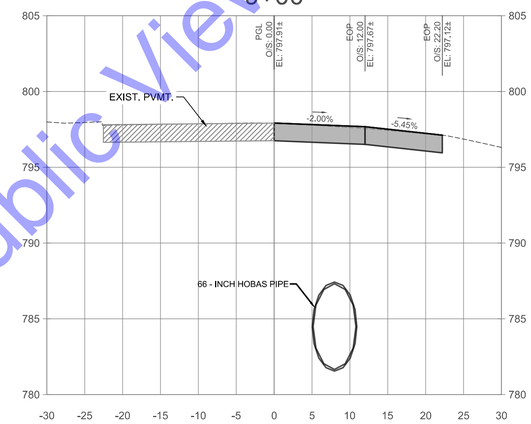

8+50

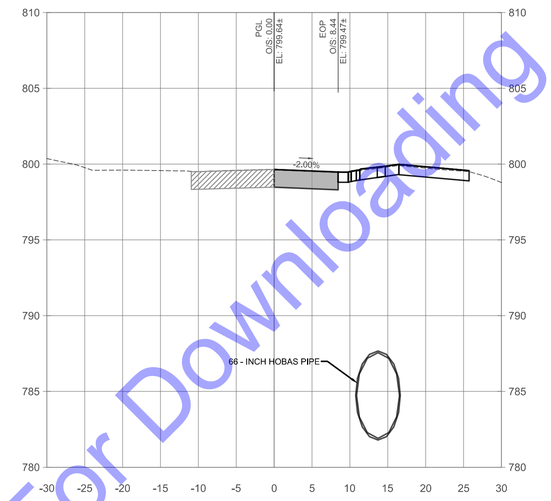

11+00

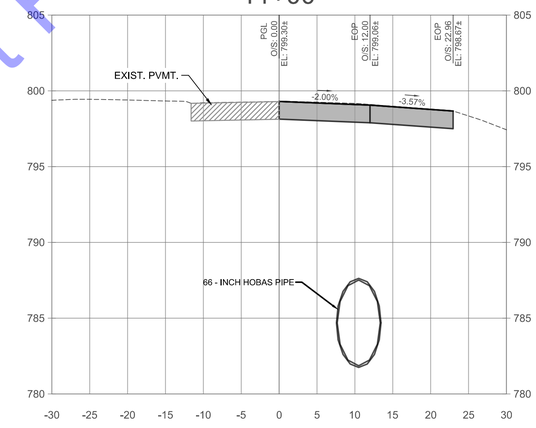

10+50

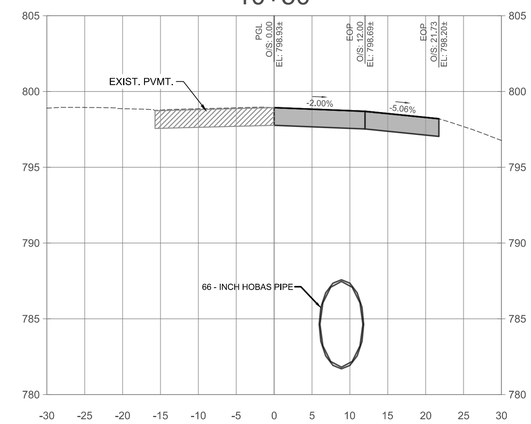

10+00

CROSS SECTIONS - SUPERIOR ST

SCALE: 1"=10'-0" HORIZONTAL
1"=5'-0" VERTICAL

CROSS SECTION LEGEND
FINISH GRADE
EXISTING GRADE

For Public Viewing Only-Not For Downloading

COMMONWEALTH ENGINEERS, INC.
A wealth of resources to master a common goal.
https://commonwealthengineers.com/

BRIAN KREED WILSON
REGISTERED
No. PE11900866
STATE OF
INDIANA
PROFESSIONAL ENGINEER
Signature
8/15/2025
Date

CITY OF KOKOMO, INDIANA
HOWARD COUNTY

NORTH SIDE INTERCEPTOR
IMPROVEMENTS PROJECT

© 2025 BY COMMONWEALTH ENGINEERS, INC. ALL RIGHTS RESERVED. REPRODUCTION BY ANY METHOD IN WHOLE OR IN PART WITHOUT PERMISSION IS PROHIBITED

Know what's below. Call before you dig.
1-800-382-5544 (ITS THE LAW)

No.	Submittal Revision	By	Date

Designed By:	Drawn By:	Checked By:
BW	BW/CH/EK	JH
Issue Date: 8/2025	Project No: S21082	Scale: AS SHOWN

CROSS SECTIONS - SUPERIOR ST

Drawing No:
XS20
Sheet: 83 OF 137

File: Z:\SHARED\IN CLIENTS A-L\KOKOMO\S21082 NORTH SIDE INTERCEPTOR DESIGN\06 CAD\A CURRENT FILES\1 DRAWINGS\07 - S21082 - CROSS SECTIONS.DWG
Saved: 8/13/2025 7:16:11 AM Plotted: 8/13/2025 12:10:15 PM Current User: Brian Waterman LastSavedBy: ekleinrichert

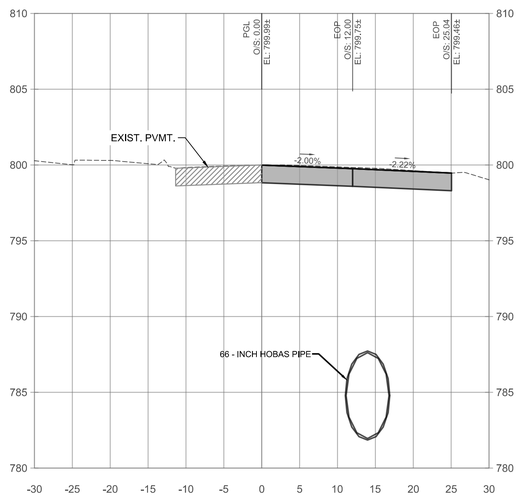

11+50

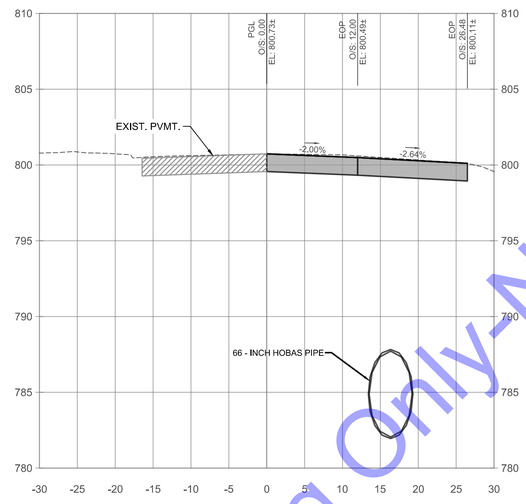

12+50

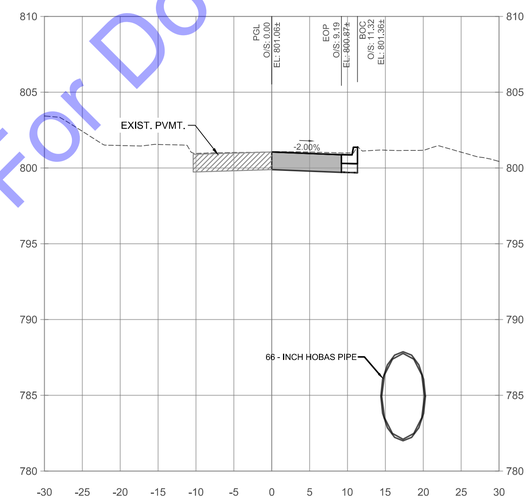

13+00

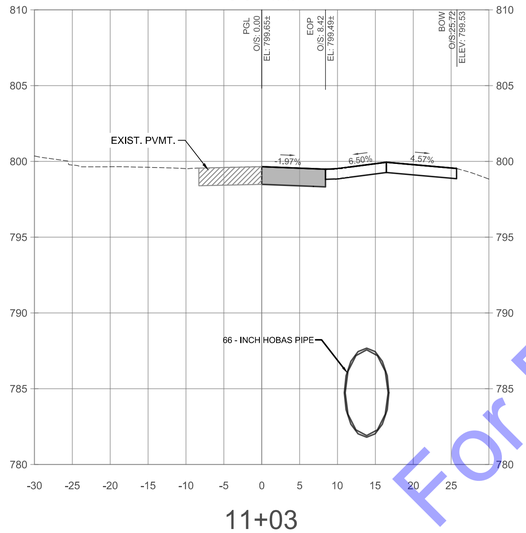

11+03

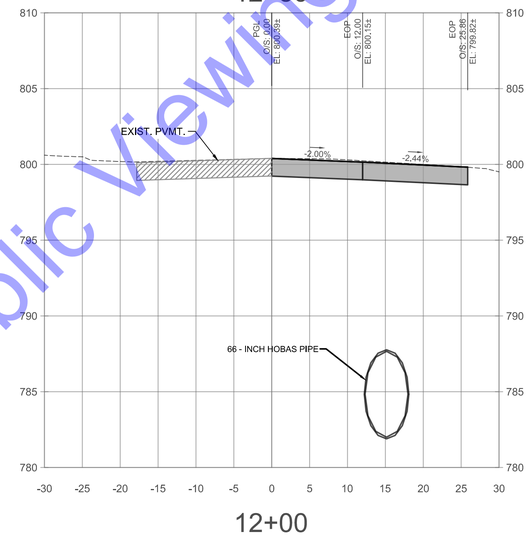

12+00

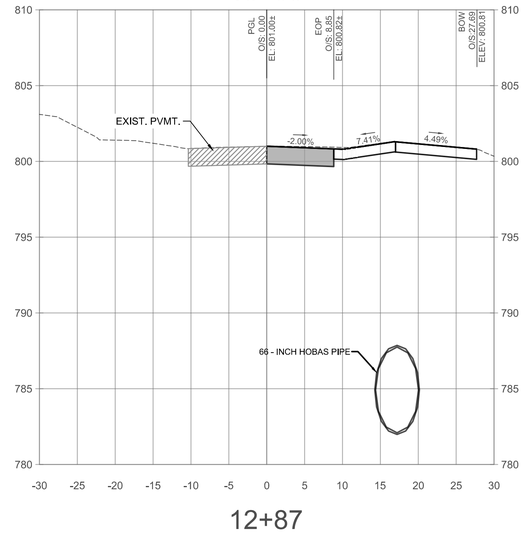

12+87

CROSS SECTIONS - SUPERIOR ST

SCALE: 1"=10'-0" HORIZONTAL
1"=5'-0" VERTICAL

CROSS SECTION LEGEND
FINISH GRADE
EXISTING GRADE

For Public Viewing Only-Not For Downloading

COMMONWEALTH ENGINEERS, INC.
A wealth of resources to master a common goal.
https://commonwealthengineers.com/

BRIAN KREED WILSON
REGISTERED
No. PE11900866
STATE OF
INDIANA
PROFESSIONAL ENGINEER

Signature 8/15/2025 Date

CITY OF KOKOMO, INDIANA
HOWARD COUNTY

NORTH SIDE INTERCEPTOR
IMPROVEMENTS PROJECT

© 2025 BY COMMONWEALTH ENGINEERS, INC. ALL RIGHTS RESERVED. REPRODUCTION, BY ANY METHOD IN WHOLE OR IN PART WITHOUT PERMISSION IS PROHIBITED

Know what's below. Call before you dig.
Know what's below. 811 before you dig.
1-800-382-5544
(ITS THE LAW)

No.	Submittal / Revision	By	Date

Designed By:	Drawn By:	Checked By:
BW	BW/CH/EK	JH
Issue Date: 8/2025	Project No: S21082	Scale: AS SHOWN

CROSS SECTIONS - SUPERIOR ST

Drawing No: XS21

Sheet: 84 OF 137

File: Z:\SHARED\IN CLIENTS A-L\KOKOMO\S21082 NORTH SIDE INTERCEPTOR DESIGN\06 CAD\A CURRENT FILES\1 DRAWINGS\07 - S21082 - CROSS SECTIONS.DWG
Saved: 8/13/2025 7:16:11 AM Plotted: 8/13/2025 12:11:34 PM Current User: Brian Waterman LastSavedBy: ekleinrichert

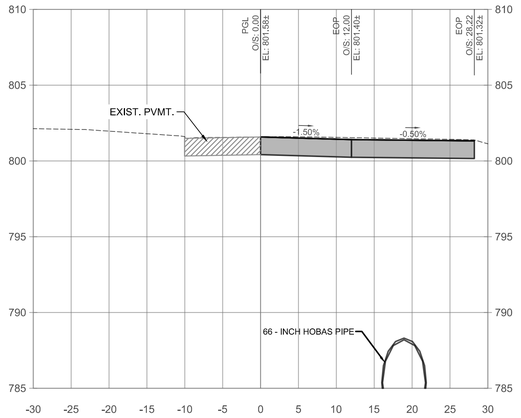

14+00

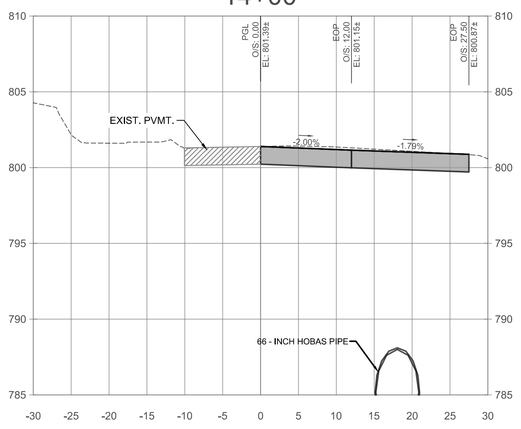

13+50

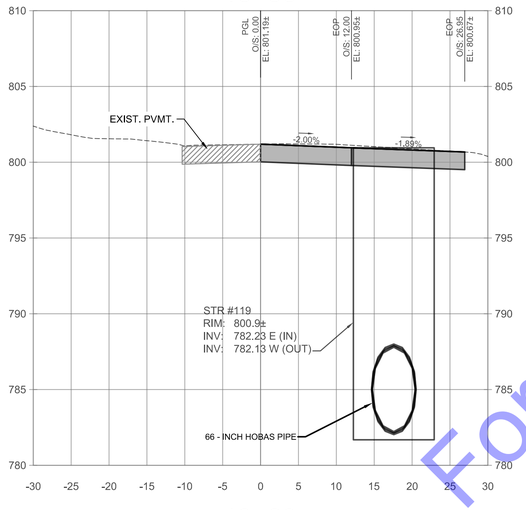

13+23

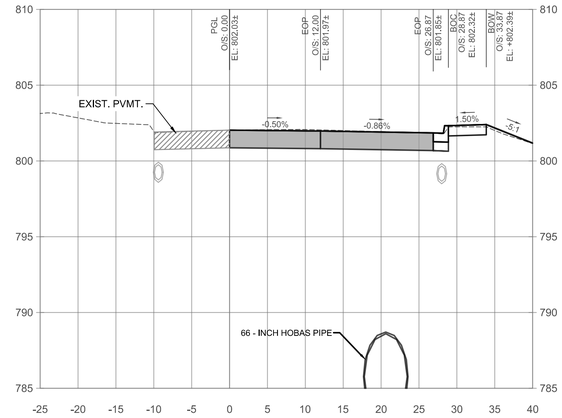

15+00

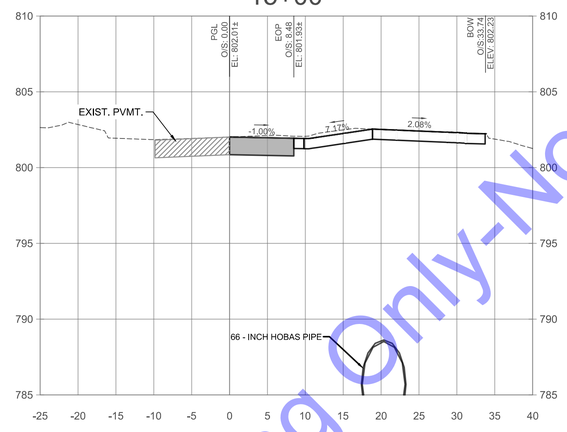

14+81

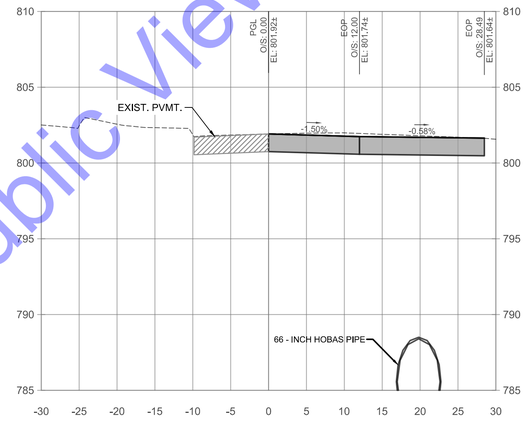

14+50

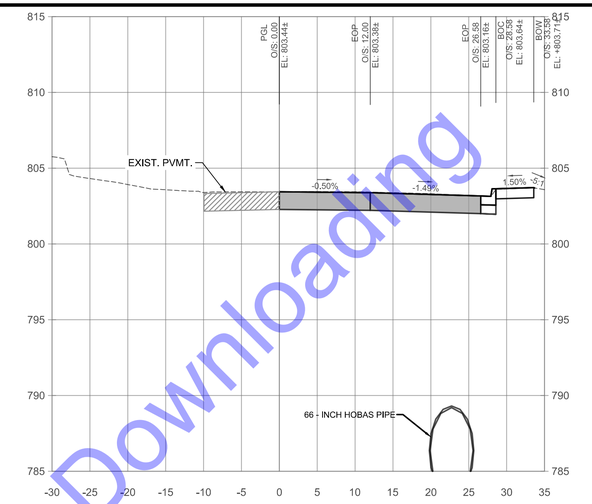

16+50

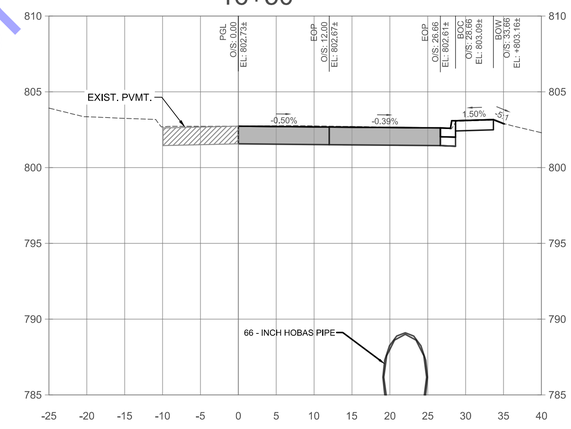

16+00

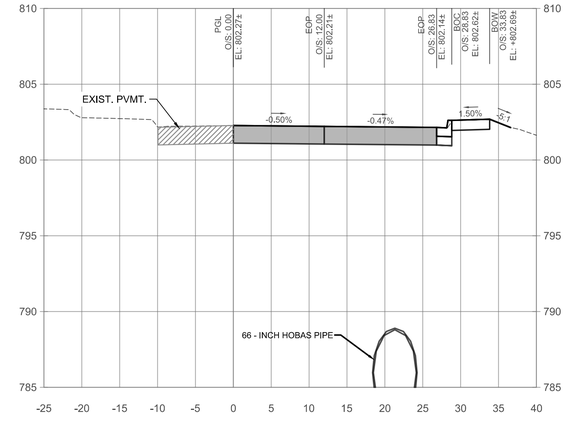

15+50

CROSS SECTIONS - SUPERIOR ST

SCALE: 1"=10'-0" HORIZONTAL
1"=5'-0" VERTICAL

CROSS SECTION LEGEND
FINISH GRADE
EXISTING GRADE

For Public Viewing Only-Not For Downloading

COMMONWEALTH ENGINEERS, INC.
A wealth of resources to master a common goal.
https://commonwealthengineers.com/

BRIAN KREED WILSON
REGISTERED
No. PE11900866
STATE OF
INDIANA
PROFESSIONAL ENGINEER
Signature 8/15/2025 Date

CITY OF KOKOMO, INDIANA
HOWARD COUNTY

NORTH SIDE INTERCEPTOR
IMPROVEMENTS PROJECT

© 2025 BY COMMONWEALTH ENGINEERS, INC. ALL RIGHTS RESERVED. REPRODUCTION BY ANY METHOD IN WHOLE OR IN PART WITHOUT PERMISSION IS PROHIBITED

Know what's below. Call before you dig.
1-800-382-5544 (ITS THE LAW)

No.	Submittal / Revision	By	Date

Designed By:	Drawn By:	Checked By:
BW	BW/CH/EK	JH
Issue Date: 8/2025	Project No: S21082	Scale: AS SHOWN

CROSS SECTIONS - SUPERIOR ST

Drawing No: XS22
Sheet: 85 OF 137

File: Z:\SHARED\IN CLIENTS A-L\KOKOMO\S21082 NORTH SIDE INTERCEPTOR DESIGN\06 CAD\A CURRENT FILES\1 DRAWINGS\07 - S21082 - CROSS SECTIONS.DWG
Saved: 8/13/2025 7:16:11 AM Plotted: 8/13/2025 12:12:54 PM Current User: Brian Waterman LastSavedBy: ekleinrichert

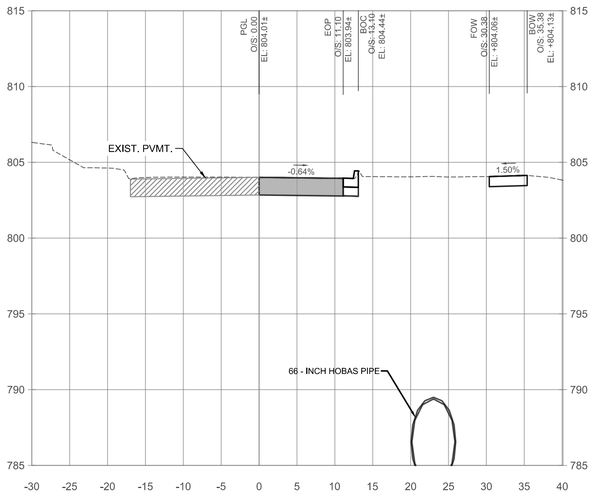

17+00

16+74

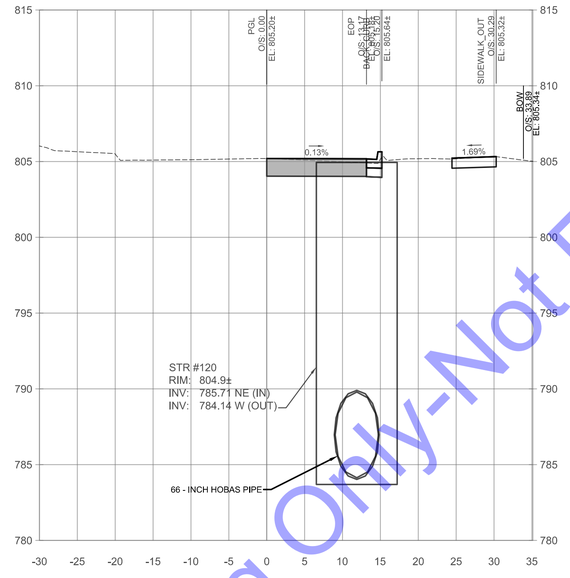

18+00

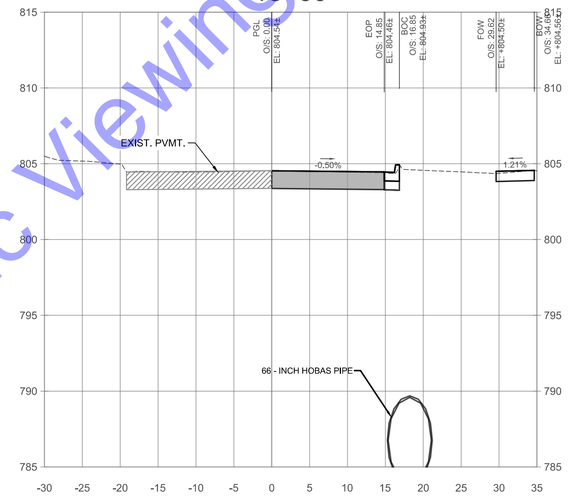

17+50

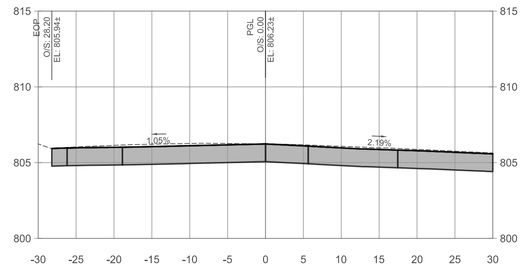

19+00

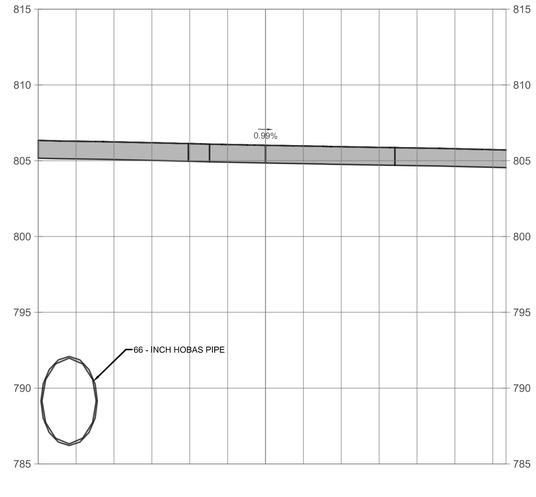

18+50

CROSS SECTIONS - SUPERIOR ST

SCALE: 1"=10'-0" HORIZONTAL
1"=5'-0" VERTICAL

CROSS SECTION LEGEND
FINISH GRADE
EXISTING GRADE

For Public Viewing Only-Not For Downloading

COMMONWEALTH ENGINEERS, INC.
A wealth of resources to master a common goal.
https://commonwealthengineers.com/

BRIAN KREED WILSON
REGISTERED
No. PE11900866
STATE OF
INDIANA
PROFESSIONAL ENGINEER

Signature: Brian Wilson
Date: 8/15/2025

CITY OF KOKOMO, INDIANA
HOWARD COUNTY

NORTH SIDE INTERCEPTOR
IMPROVEMENTS PROJECT

© 2025 BY COMMONWEALTH ENGINEERS, INC. ALL RIGHTS RESERVED. REPRODUCTION BY ANY METHOD IN WHOLE OR IN PART WITHOUT PERMISSION IS PROHIBITED

Know what's below. Call before you dig.
Know what's below. 811 before you dig.
1-800-382-5544
(ITS THE LAW)

No.	Submittal/ Revision	By	Date

Designed By:	Drawn By:	Checked By:
BW	BW/CH/EK	JH
Issue Date:	Project No:	Scale:
8/2025	S21082	AS SHOWN

CROSS SECTIONS - SUPERIOR ST

Drawing No:
XS23
Sheet: 86 OF 137

File: Z:\SHARED\IN CLIENTS A-L\KOKOMO\S21082 NORTH SIDE INTERCEPTOR DESIGN\06 CAD\A CURRENT FILES\1 DRAWINGS\07 - S21082 - CROSS SECTIONS.DWG
Saved: 8/13/2025 7:16:11 AM Plotted: 8/13/2025 12:14:14 PM Current User: Brian Waterman LastSavedBy: eklein richert

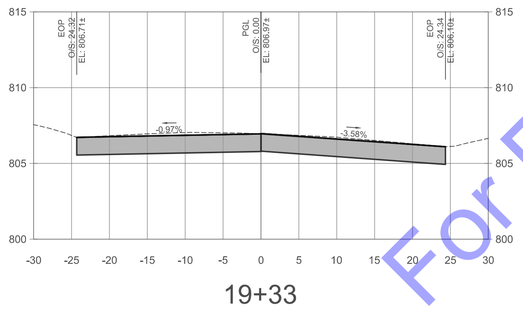

19+33

CROSS SECTIONS - SUPERIOR ST

SCALE: 1"=10'-0" HORIZONTAL
1"=5'-0" VERTICAL

CROSS SECTION LEGEND

FINISH GRADE

EXISTING GRADE

For Public Viewing Only-Not For Downloading

COMMONWEALTH ENGINEERS, INC.
A wealth of resources to master a common goal.
https://commonwealthengineers.com/

BRIAN KREED WILSON
REGISTERED
No. PE11900866
STATE OF
INDIANA
PROFESSIONAL ENGINEER

Signature 8/15/2025 Date

CITY OF KOKOMO, INDIANA
HOWARD COUNTY

NORTH SIDE INTERCEPTOR
IMPROVEMENTS PROJECT

© 2025 BY COMMONWEALTH ENGINEERS, INC. ALL RIGHTS RESERVED. REPRODUCTION BY ANY METHOD IN WHOLE OR IN PART WITHOUT PERMISSION IS PROHIBITED

Know what's below. Call before you dig.
1-800-382-5544 (ITS THE LAW)

No.	Submittal Revision	By	Date

Designed By:	Drawn By:	Checked By:
BW	BW/CH/EK	JH
Issue Date: 8/2025	Project No: S21082	Scale: AS SHOWN

CROSS SECTIONS - SUPERIOR ST

Drawing No:
XS24
Sheet: 87 OF 137

File: Z:\SHARED\IN CLIENTS A-L\KOKOMO\S21082 NORTH SIDE INTERCEPTOR DESIGN\06 CAD\A CURRENT FILES\1 DRAWINGS\07 - S21082 - CROSS SECTIONS.DWG
Saved: 8/13/2025 7:16:11 AM Plotted: 8/13/2025 12:15:32 PM Current User: Brian Waterman LastSavedBy: eklenrichert

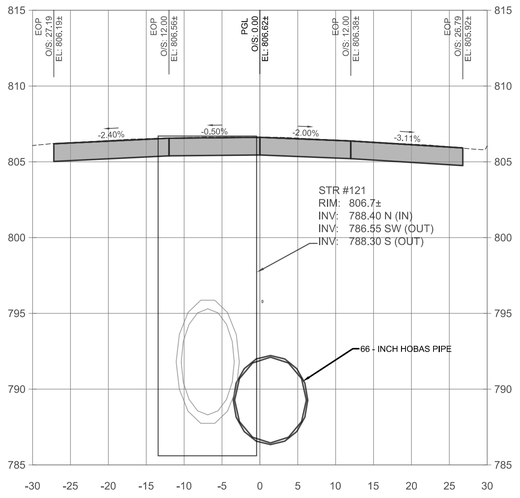

0+25

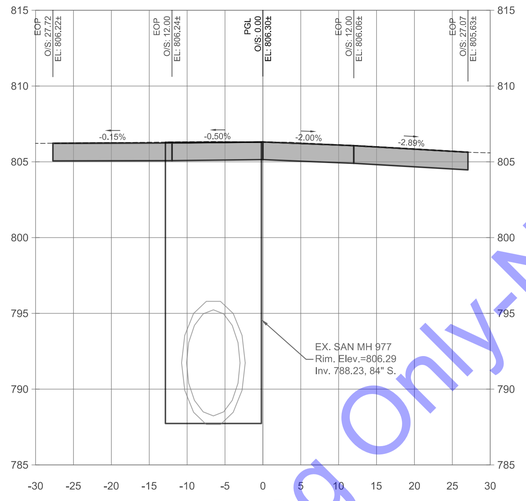

0+54

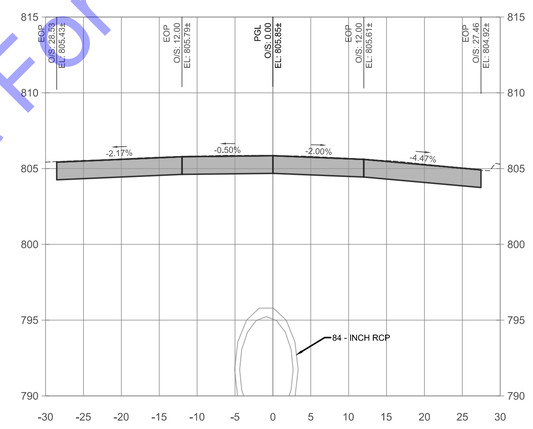

1+00

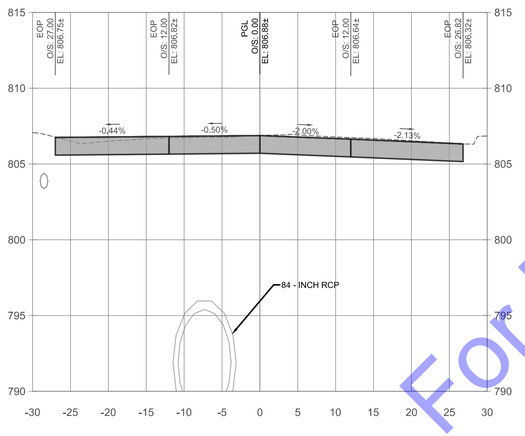

0+00

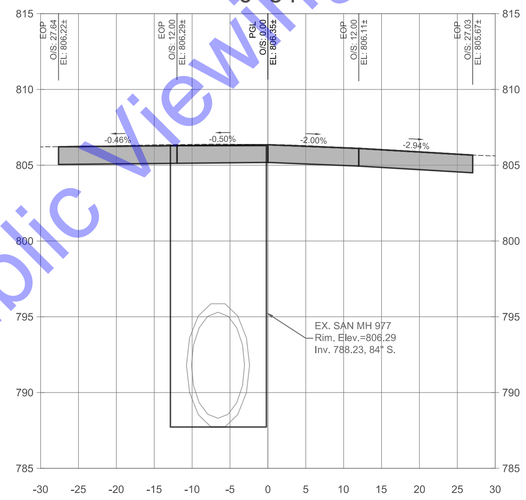

0+50

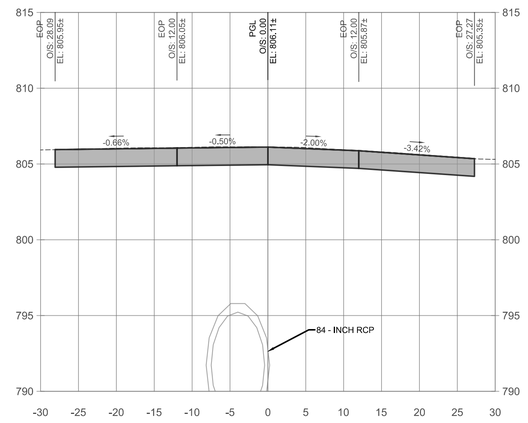

0+75

CROSS SECTIONS - WASHINGTON ST

SCALE: 1"=10'-0" HORIZONTAL
1"=5'-0" VERTICAL

CROSS SECTION LEGEND

FINISH GRADE

EXISTING GRADE

For Public Viewing Only-Not For Downloading

COMMONWEALTH ENGINEERS, INC.
A wealth of resources to master a common goal.
https://commonwealthengineers.com/

BRIAN KREED WILSON
REGISTERED
No. PE11900866
STATE OF
INDIANA
PROFESSIONAL ENGINEER

Signature 8/15/2025 Date

CITY OF KOKOMO, INDIANA
HOWARD COUNTY

NORTH SIDE INTERCEPTOR
IMPROVEMENTS PROJECT

© 2025 BY COMMONWEALTH ENGINEERS, INC. ALL RIGHTS RESERVED. REPRODUCTION BY ANY METHOD IN WHOLE OR IN PART WITHOUT PERMISSION IS PROHIBITED

Know what's below. Call before you dig.
Know what's below. 811 before you dig.
1-800-382-5544
(ITS THE LAW)

No.	Submittal / Revision	By	Date

Designed By:	Drawn By:	Checked By:
BW	BW/CH/EK	JH
Issue Date: 8/2025	Project No: S21082	Scale: AS SHOWN

CROSS SECTIONS - WASHINGTON ST

Drawing No: XS25

Sheet: 88 OF 137

File: Z:\SHARED\IN CLIENTS A-L\KOKOMO\S21082 NORTH SIDE INTERCEPTOR DESIGN\06 CAD\A CURRENT FILES\1 DRAWINGS\07 - S21082 - CROSS SECTIONS.DWG
Saved: 8/13/2025 7:16:11 AM Plotted: 8/13/2025 12:16:55 PM Current User: Brian Waterman LastSavedBy: eklein1chert

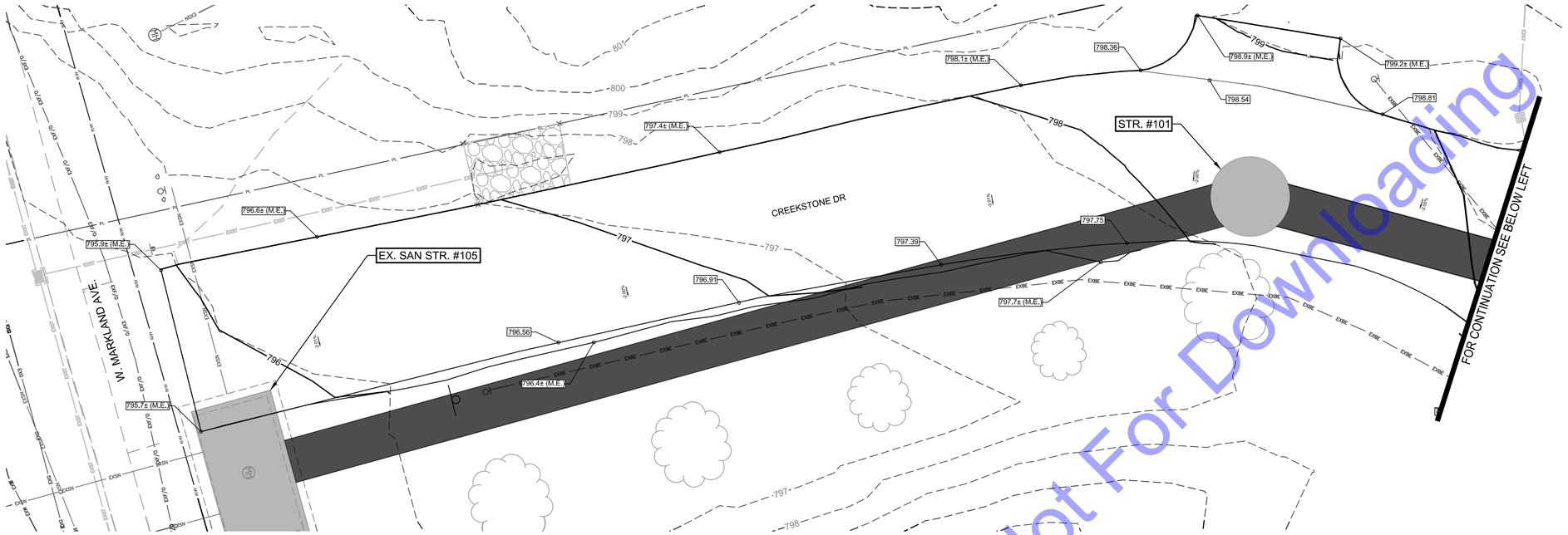

GRADING DETAIL - CREEKSTONE DR
SCALE: 1"=10'-0"

SCALE: 1"=10'
10' 0 10'

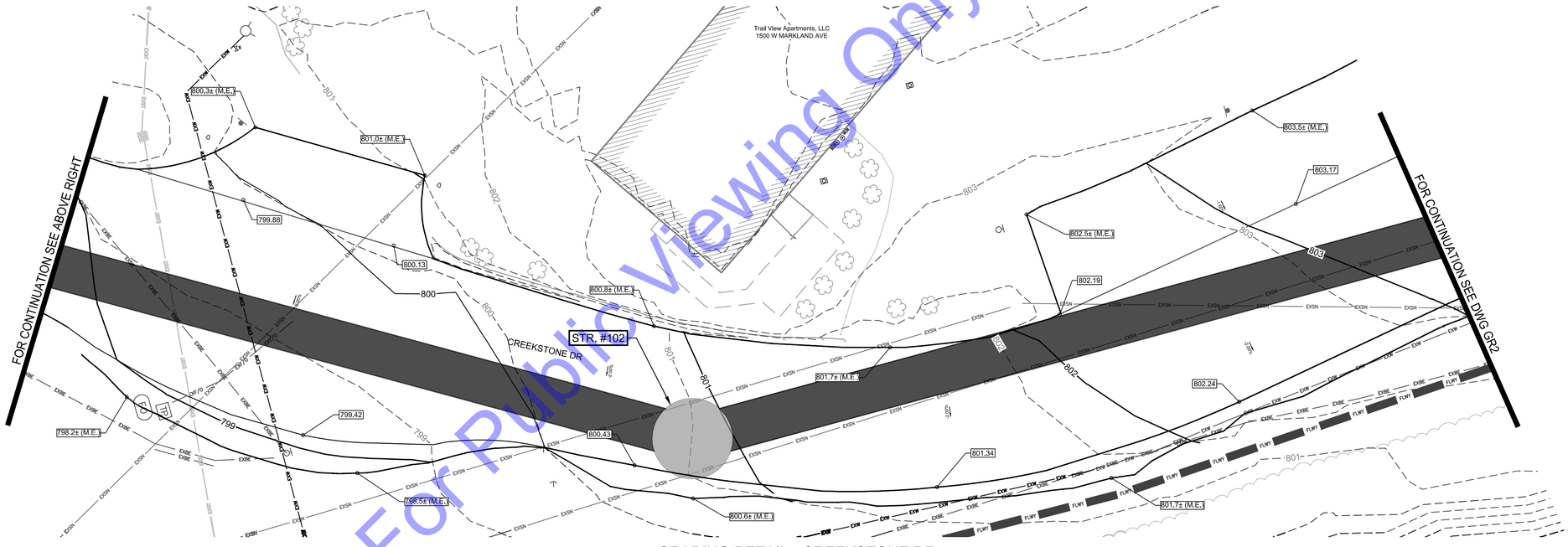

GRADING DETAIL - CREEKSTONE DR
SCALE: 1"=10'-0"

SCALE: 1"=10'
10' 0 10'

SPOT ELEVATION LEGEND

800.0±(M.E.)	MATCH EXISTING ELEVATION
800.00	SPOT ELEVATION

CONTOUR LEGEND

800	PROPOSED CONTOUR
800	EXISTING CONTOUR

For Public Viewing Only-Not For Downloading

COMMONWEALTH ENGINEERS, INC.
A wealth of resources to master a common goal.
https://commonwealthengineers.com/

BRIAN KREED WILSON
REGISTERED
No. PE11900866
STATE OF INDIANA
PROFESSIONAL ENGINEER
Signature 8/15/2025 Date

CITY OF KOKOMO, INDIANA
HOWARD COUNTY

NORTH SIDE INTERCEPTOR IMPROVEMENTS PROJECT

© 2025 BY COMMONWEALTH ENGINEERS, INC. ALL RIGHTS RESERVED. REPRODUCTION BY ANY METHOD IN WHOLE OR IN PART WITHOUT PERMISSION IS PROHIBITED

Know what's below. Call before you dig.
1-800-382-5544 (ITS THE LAW)

No.	Submittal Revision	By	Date

Designed By:	Drawn By:	Checked By:
BW	BW/CH/EK	JH
Issue Date:	Project No:	Scale:
8/2025	S21082	AS SHOWN

GRADING DETAILS - CREEKSTONE DR

Drawing No: GR1

Sheet: 89 OF 137

File: Z:\SHARED\IN CLIENTS A-L\KOKOMO\S21082 NORTH SIDE INTERCEPTOR DESIGN\06 CAD\A CURRENT FILES\1 DRAWINGS\07 - S21082 - CROSS SECTIONS.DWG
Saved: 8/13/2025 7:16:11 AM Plotted: 8/13/2025 12:19:15 PM Current User: Brian Waterman LastSavedBy: ehlenrichert

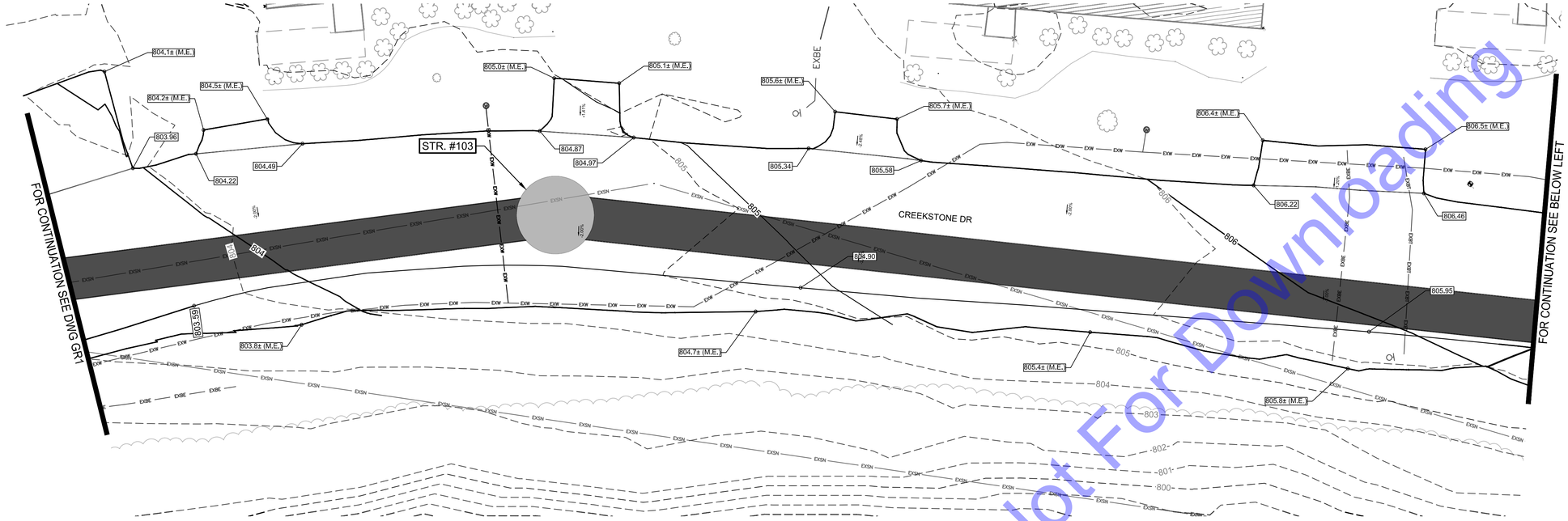

GRADING DETAIL - CREEKSTONE DR

SCALE: 1"=10'-0"

SCALE: 1"=10'

10' 0 10'

SPOT ELEVATION LEGEND

800.0±(M.E.)	MATCH EXISTING ELEVATION
800.00	SPOT ELEVATION
BD 800.00	BOTTOM OF DITCH

CONTOUR LEGEND

800	PROPOSED CONTOUR
800	EXISTING CONTOUR

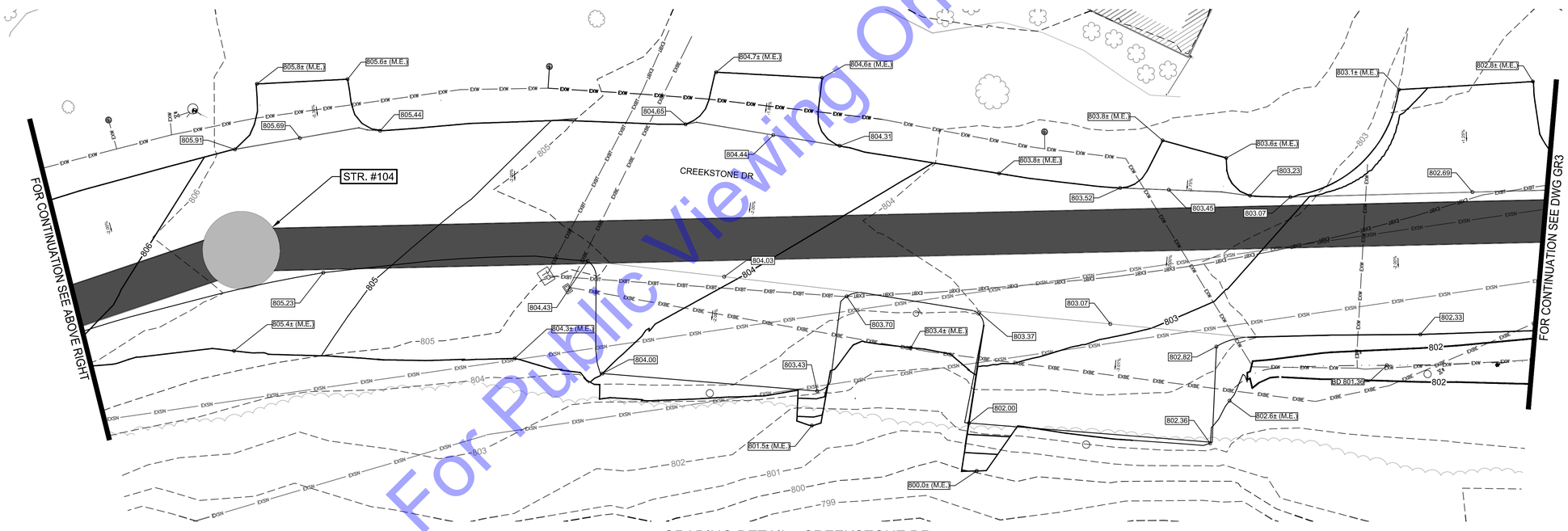

GRADING DETAIL - CREEKSTONE DR

SCALE: 1"=10'-0"

SCALE: 1"=10'

10' 0 10'

For Public Viewing Only-Not For Downloading

COMMONWEALTH ENGINEERS, INC.
A wealth of resources to master a common goal.
https://commonwealthengineers.com/

BRIAN KREED WILSON
REGISTERED
No. PE11900866
STATE OF
INDIANA
PROFESSIONAL ENGINEER

Brian Wilson
Signature

8/15/2025
Date

CITY OF KOKOMO, INDIANA
HOWARD COUNTY

NORTH SIDE INTERCEPTOR
IMPROVEMENTS PROJECT

© 2025 BY COMMONWEALTH ENGINEERS, INC. ALL RIGHTS RESERVED. REPRODUCTION BY ANY METHOD IN WHOLE OR IN PART WITHOUT PERMISSION IS PROHIBITED

Indiana 811
Know what's below. Call before you dig.
Know what's below. 811 before you dig.
1-800-382-5544
(IT'S THE LAW)

No.	Submittal / Revision	By	Date

Designed By:	Drawn By:	Checked By:
BW	BW/CH/EK	JH
Issue Date:	Project No:	Scale:
8/2025	S21082	AS SHOWN

GRADING DETAILS - CREEKSTONE DR

Drawing No:
GR2
Sheet: 90 OF 137

File: Z:\SHARED\IN CLIENTS A-L\KOKOMO\S21082 NORTH SIDE INTERCEPTOR DESIGN\06 CAD\A CURRENT FILES\ DRAWINGS\07 - S21082 - CROSS SECTIONS.DWG
Saved: 8/13/2025 7:16:11 AM Plotted: 8/13/2025 12:21:40 PM Current User: Brian Waterman LastSavedBy: ekleinrichert

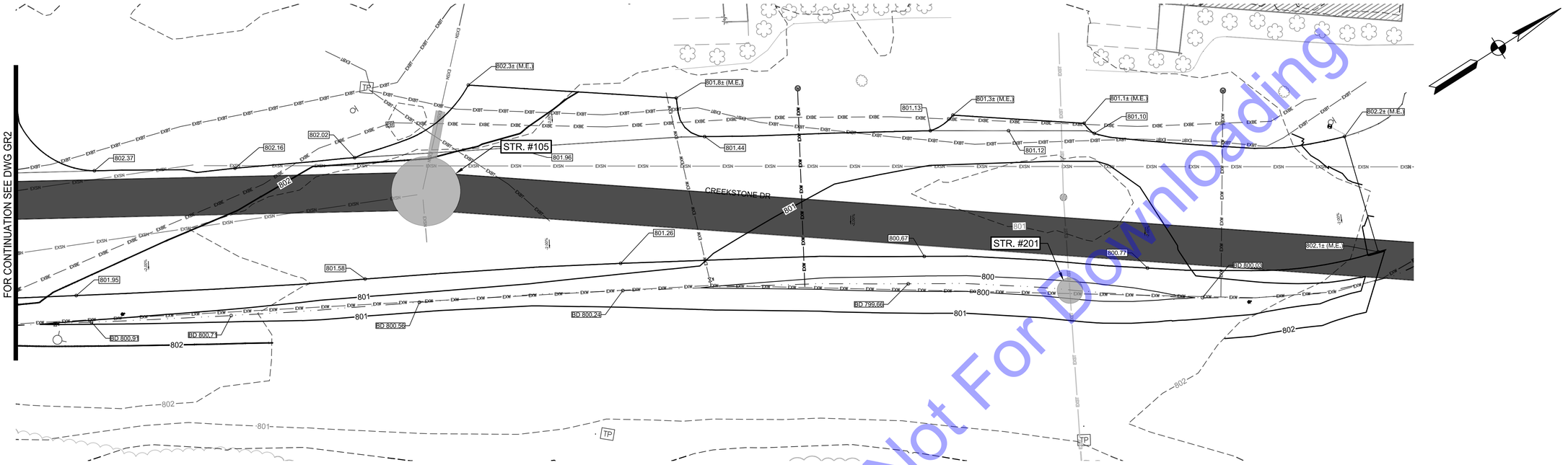

GRADING DETAIL - CREEKSTONE DR

SCALE: 1"=10'-0"

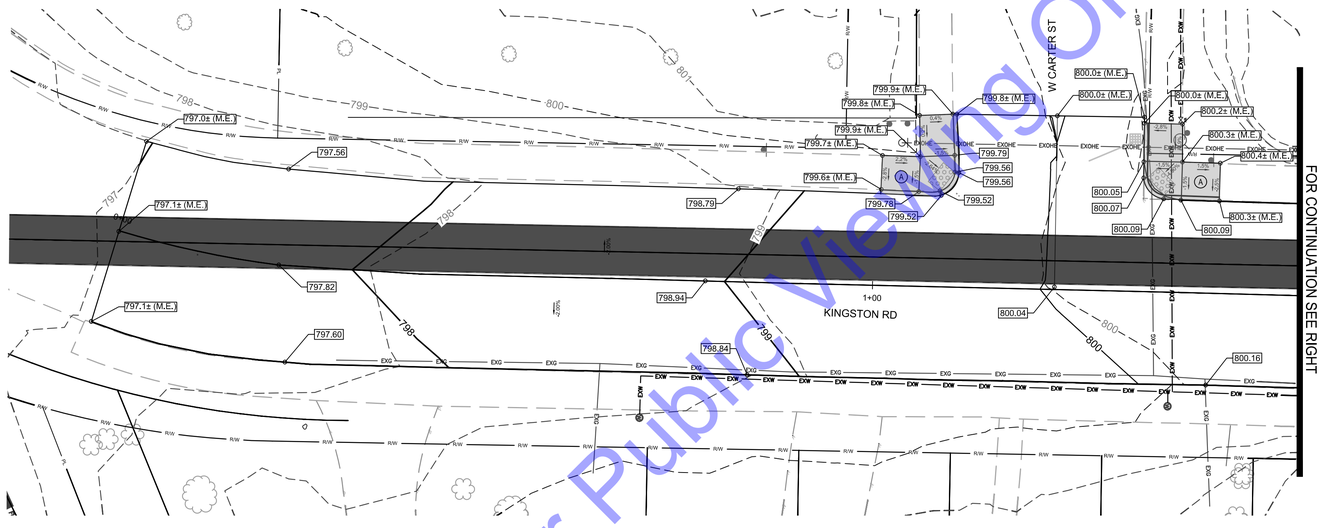

GRADING DETAIL - KINGSTON RD @ CARTER ST

SCALE: 1"=10'-0"

ADA RAMP TYPES - (SEE DETAILS, DWG. GR6)

A

B

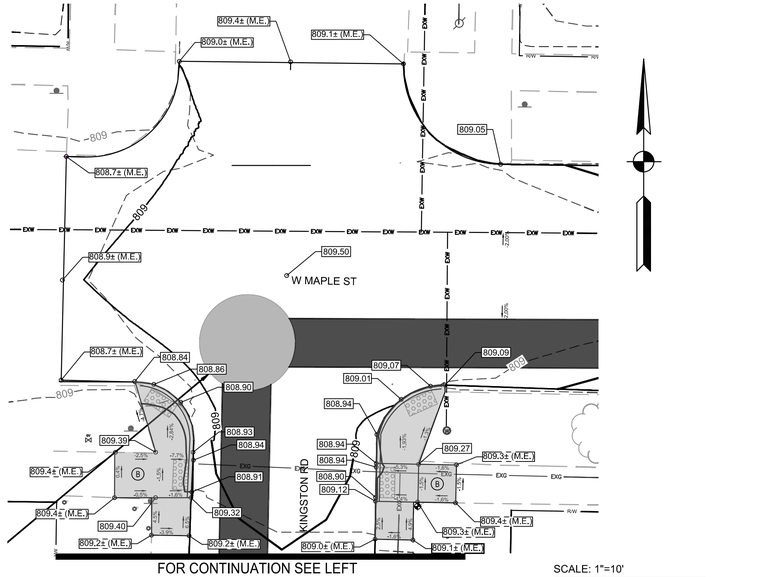

GRADING DETAIL - KINGSTON RD @ W MAPLE ST

SCALE: 1"=10'-0"

SCALE: 1"=10'

10' 0 10'

SPOT ELEVATION LEGEND

800.0±(M.E.)	MATCH EXISTING ELEVATION
800.00	SPOT ELEVATION
BD 800.00	BOTTOM OF DITCH

CONTOUR LEGEND

800	PROPOSED CONTOUR
800	EXISTING CONTOUR

For Public Viewing Only-Not For Downloading

COMMONWEALTH ENGINEERS, INC.
A wealth of resources to master a common goal.
https://commonwealthengineers.com/

BRIAN KREED WILSON
REGISTERED
No. PE11900866
STATE OF INDIANA
PROFESSIONAL ENGINEER

Brian Wilson
Signature

8/15/2025
Date

CITY OF KOKOMO, INDIANA
HOWARD COUNTY

NORTH SIDE INTERCEPTOR IMPROVEMENTS PROJECT

© 2025 BY COMMONWEALTH ENGINEERS, INC. ALL RIGHTS RESERVED. REPRODUCTION BY ANY METHOD IN WHOLE OR IN PART WITHOUT PERMISSION IS PROHIBITED

Know what's below. Call before you dig.
Know what's below. 811 before you dig.
1-800-382-5544
(ITS THE LAW)

No.	Submittal Revision	By	Date

Designed By:	Drawn By:	Checked By:
BW	BW/CH/EK	JH
Issue Date:	Project No:	Scale:
8/2025	S21082	AS SHOWN

GRADING DETAILS - CREEKSTONE DR & KINGSTON RD

Drawing No:
GR3

Sheet: 91 OF 137

File: Z:\SHARED\IN CLIENTS A-L\KOKOMO\S21082 NORTH SIDE INTERCEPTOR DESIGN\06 CAD\A CURRENT FILES\1 DRAWINGS\07 - S21082 - CROSS SECTIONS.DWG
Saved: 8/13/2025 7:16:11 AM Plotted: 8/13/2025 12:25:15 PM Current User: Brian Waterman LastSavedBy: eileinrichert

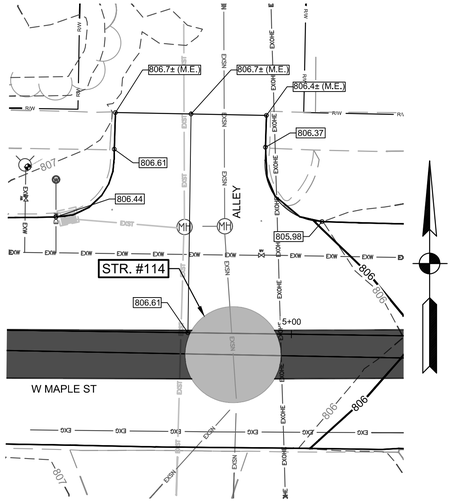

GRADING DETAIL - ALLEY @ W MAPLE ST
SCALE: 1"=10'-0"

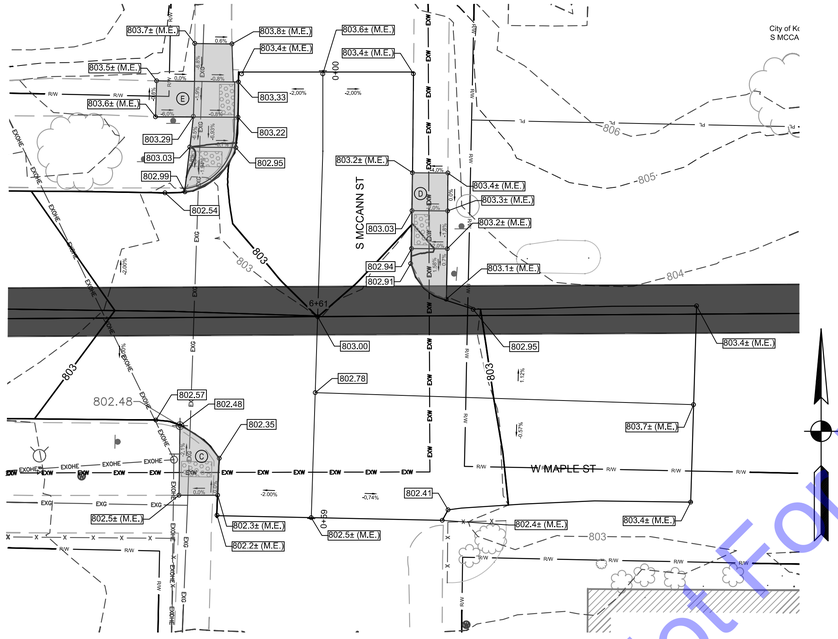

GRADING DETAIL - S MCCANN ST @ W MAPLE ST
SCALE: 1"=10'-0"

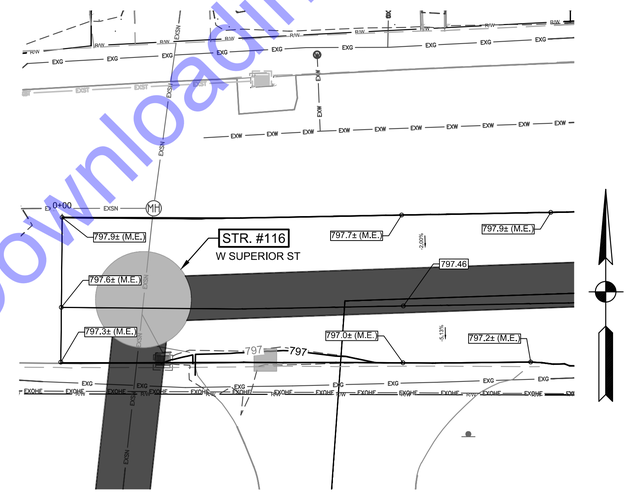

GRADING DETAIL - W SUPERIOR ST @ 815 W SUPERIOR ST
SCALE: 1"=10'-0"

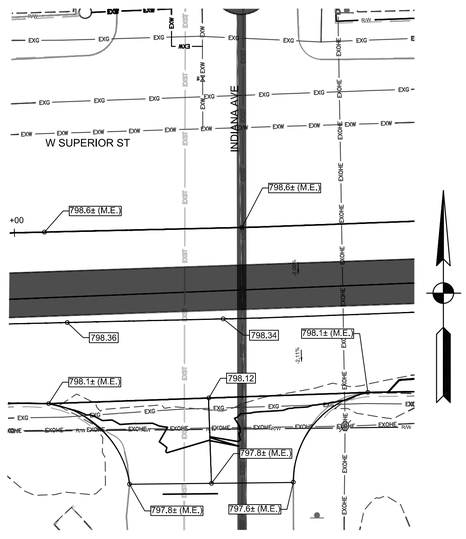

GRADING DETAIL - W SUPERIOR ST @ S INDIANA AVE
SCALE: 1"=10'-0"

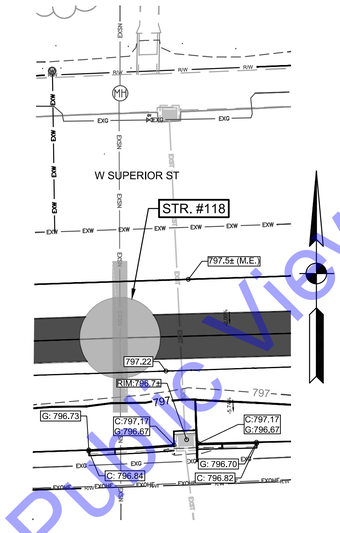

GRADING DETAIL - W SUPERIOR ST @ STR #118
SCALE: 1"=10'-0"

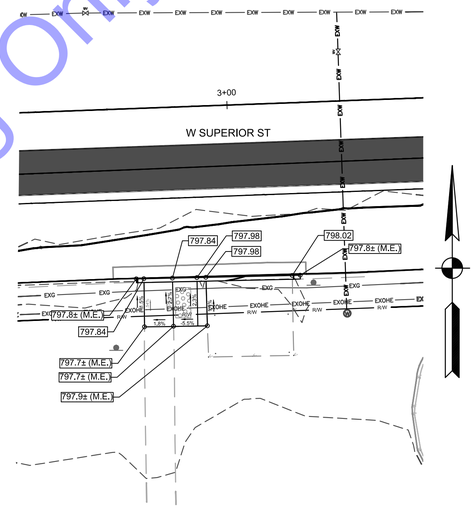

GRADING DETAIL - W SUPERIOR ST @BUS HUT SCALE: 1"=10'-0"

ADA RAMP TYPES - (SEE DETAILS, DWGS. GR5 & GR6)

C

D

E

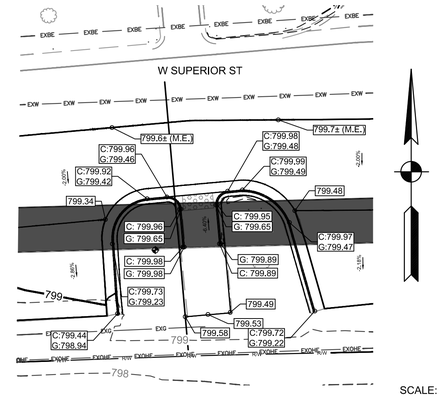

GRADING DETAIL - W SUPERIOR ST @ CURB BUMPOUT
SCALE: 1"=10'-0"

SCALE: 1"=10'
10' 0 10'

SPOT ELEVATION LEGEND

800.0±(M.E.)	MATCH EXISTING ELEVATION
800.00	SPOT ELEVATION
C:800.00	TOP OF CURB ELEVATION
G:800.00	GUTTER ELEVATION
RIM:800.00	RIM ELEVATION

CONTOUR LEGEND

800 PROPOSED CONTOUR

800 EXISTING CONTOUR

For Public Viewing Only-Not For Downloading

COMMONWEALTH ENGINEERS, INC.
A wealth of resources to master a common goal.
https://commonwealthengineers.com/

BRIAN KREED WILSON
REGISTERED
No. PE11900866
STATE OF INDIANA
PROFESSIONAL ENGINEER
Brian Wilson
Signature
8/15/2025
Date

CITY OF KOKOMO, INDIANA
HOWARD COUNTY

NORTH SIDE INTERCEPTOR IMPROVEMENTS PROJECT

© 2025 BY COMMONWEALTH ENGINEERS, INC. ALL RIGHTS RESERVED. REPRODUCTION BY ANY METHOD IN WHOLE OR IN PART WITHOUT PERMISSION IS PROHIBITED

Know what's below. Call before you dig.
Know what's below. 811 before you dig.
1-800-382-5544
(ITS THE LAW)

No.	Submittal Revision	By	Date

Designed By:	Drawn By:	Checked By:
BW	BW/CH/EK	JH
Issue Date:	Project No:	Scale:
8/2025	S21082	AS SHOWN

GRADING DETAILS - W MAPLE ST & W SUPERIOR ST

Drawing No:
GR4
Sheet: 92 OF 137

File: Z:\SHARED\IN CLIENTS A-L\KOKOMO\S21082 NORTH SIDE INTERCEPTOR DESIGN\06 CAD\A CURRENT FILES\1 DRAWINGS\07 - S21082 - CROSS SECTIONS.DWG
Saved: 8/18/2025 4:46:52 PM Plotted: 8/19/2025 7:09:04 AM Current User: Eric Kleinrichert LastSavedBy: ekleinrichert

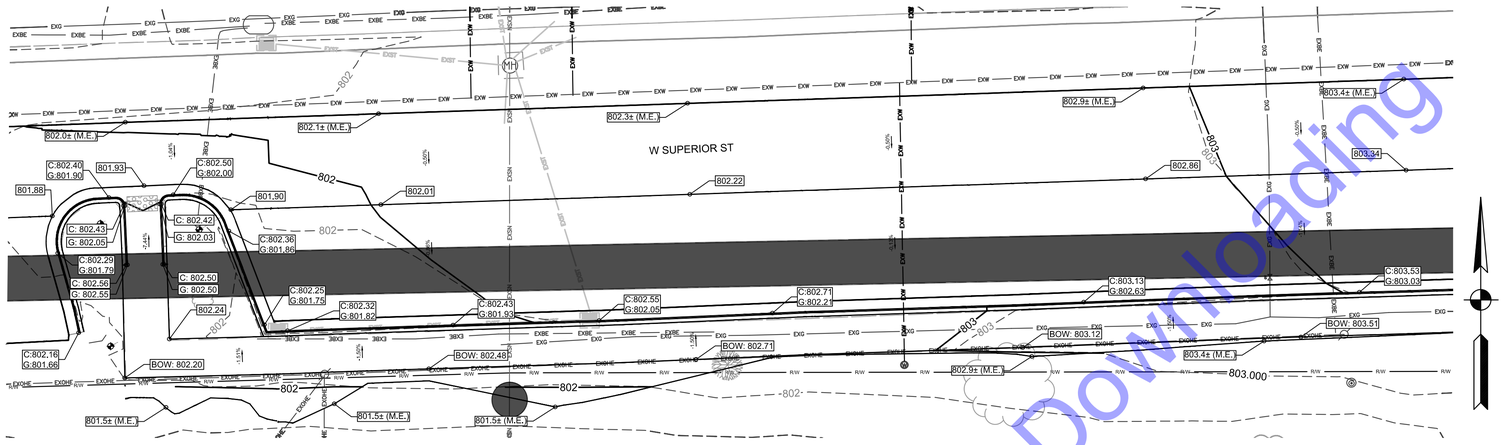

GRADING DETAIL - W SUPERIOR ST

SCALE: 1"=10'-0"

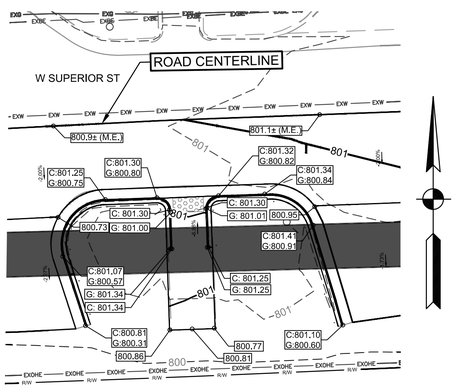

GRADING DETAIL - W SUPERIOR ST @ CURB BUMPOUT

SCALE: 1"=10'-0"

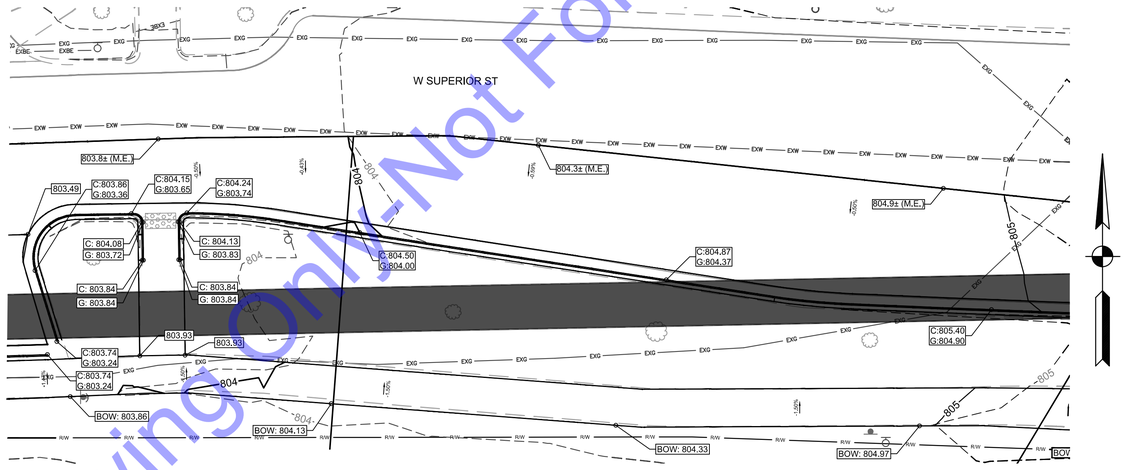

GRADING DETAIL - W SUPERIOR ST

SCALE: 1"=10'-0"

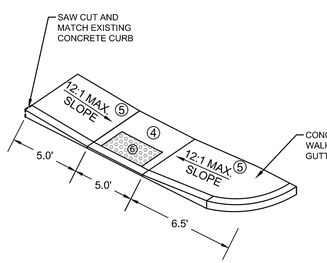

ADA RAMP DETAIL - TYPE D

NOT TO SCALE

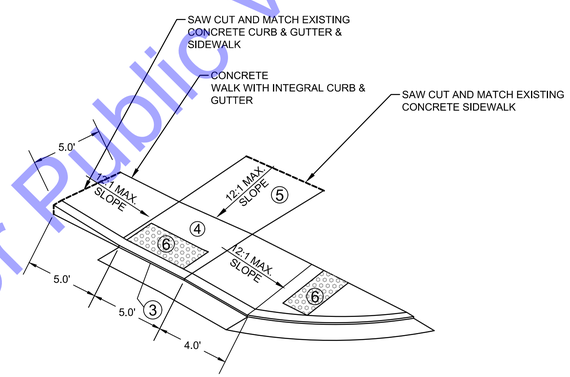

ADA RAMP DETAIL - TYPE E

NOT TO SCALE

SCALE: 1"=10'

10' 0 10'

SPOT ELEVATION LEGEND

800.0±(M.E.)	MATCH EXISTING ELEVATION
800.00	SPOT ELEVATION
C:800.00	TOP OF CURB ELEVATION
G:800.00	GUTTER ELEVATION
RIM:800.00	RIM ELEVATION
BOW:800.00	BACK OF WALK ELEVATION

CONTOUR LEGEND

800 —— PROPOSED CONTOUR

--- 800 --- EXISTING CONTOUR

For Public Viewing Only - Not For Downloading

COMMONWEALTH ENGINEERS, INC.
A wealth of resources to master a common goal.
https://commonwealthengineers.com/

BRIAN KREED WILSON
REGISTERED
No. PE11900866
STATE OF INDIANA
PROFESSIONAL ENGINEER

Brian Wilson
Signature

8/15/2025
Date

CITY OF KOKOMO, INDIANA
HOWARD COUNTY

NORTH SIDE INTERCEPTOR
IMPROVEMENTS PROJECT

© 2025 BY COMMONWEALTH ENGINEERS, INC. ALL RIGHTS RESERVED. REPRODUCTION OF ANY METHOD IN WHOLE OR IN PART WITHOUT PERMISSION IS PROHIBITED

Know what's below. Call before you dig.
Know what's below, 811 before you dig.
1-800-382-5544
(ITS THE LAW)

No.	Submittal / Revision	By	Date

Designed By:	Drawn By:	Checked By:
BW	BW/CH/EK	JH
Issue Date:	Project No:	Scale:
8/2025	S21082	AS SHOWN

GRADING DETAILS - W SUPERIOR ST

Drawing No:
GR5
Sheet: 93 OF 137

File: Z:\SHARED\IN CLIENTS A-L\KOKOMO\S21082 NORTH SIDE INTERCEPTOR DESIGN\06 CAD\A CURRENT FILES\1 DRAWINGS\07 - S21082 - CROSS SECTIONS.DWG
Saved: 8/19/2025 7:09:19 AM Plotted: 8/19/2025 7:18:30 AM Current User: Eric Kleinrichert LastSavedBy: ekleinrichert

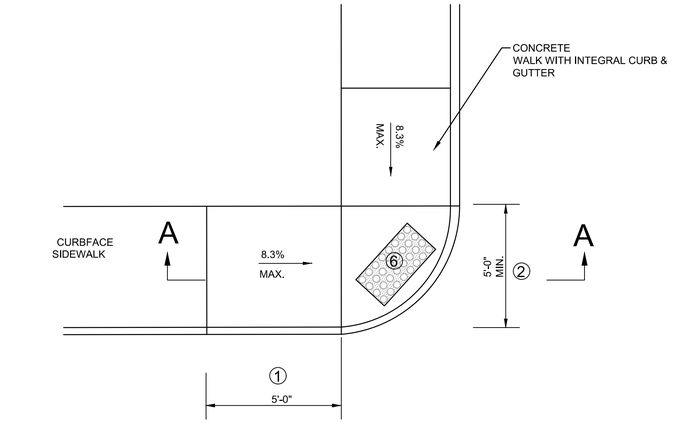

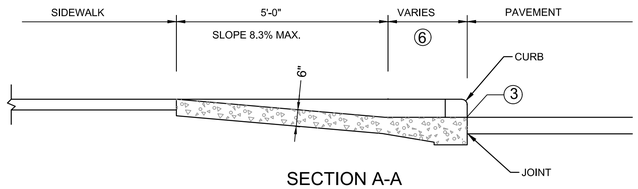

SECTION A-A

ADA RAMP DETAIL - TYPE A

NOT TO SCALE

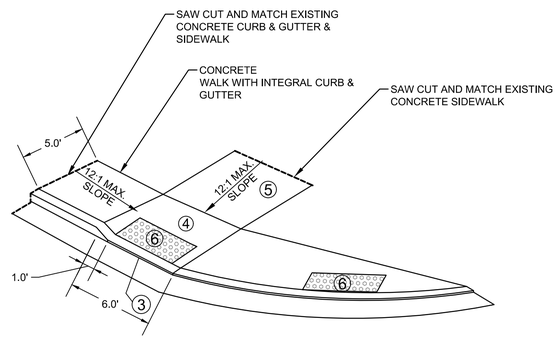

ADA RAMP DETAIL - TYPE B

NOT TO SCALE

ADA SIDEWALK/RAMP DETAILS

NO SCALE

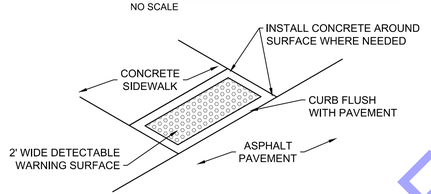

DETECTABLE WARNING SURFACE DETAIL

NOT TO SCALE

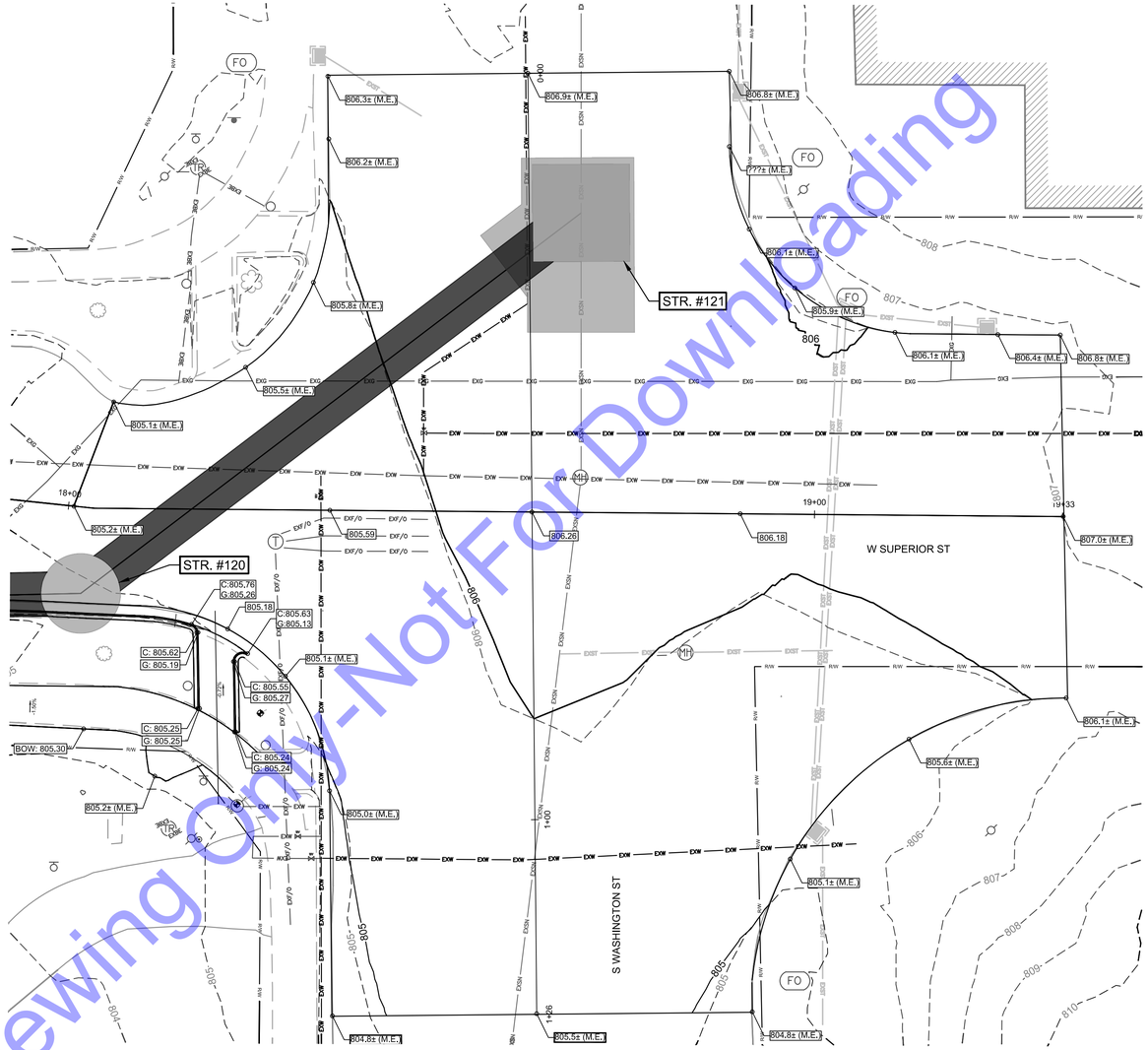

GRADING DETAIL - W SUPERIOR ST @ S WASHINGTON ST

SCALE: 1"=10'-0"

GENERAL NOTES CURB RAMP DETAILS

1. THESE DIMENSIONS ARE BASED ON A 6" CURB HEIGHT, AND SHALL BE PROPORTIONALLY ADJUSTED FOR OTHER CURB HEIGHTS.
2. A 4'-0" MINIMUM WIDTH RAMP MAY BE USED WHEN EXISTING SPACE PROHIBITS THE CONSTRUCTION OF THE 5'-0" WIDE RAMP.
3. THE BOTTOM EDGE OF THE CURB RAMP SHALL BE FLUSH WITH THE EDGE OF THE ADJACENT PAVEMENT AND GUTTER LINE.
4. TURNING SPACE AT THE TOP OF CURB RAMPS SHALL HAVE MAXIMUM CROSS SLOPE OF 2.0% IN ANY DIRECTION. WHERE SITE INFEASIBILITY PRECLUDES A TURNING SPACE SLOPE OF 2.0% IN ANY DIRECTION, THE SLOPE PERPENDICULAR TO THE CURB FACE SHALL NOT EXCEED 2.0%. A TURNING SPACE (4.0 FT) MINIMUM BY (4.0 FT) MINIMUM SHALL BE PROVIDED AT THE TOP OF THE CURB RAMP AND SHALL BE PERMITTED TO OVERLAP OTHER TURNING SPACES AND CLEAR SPACES. WHERE THE TURNING SPACE IS CONSTRAINED AT THE BACK OF THE SIDEWALK, THE TURNING SPACE SHALL BE (4.0 FT) MINIMUM BY (5.0 FT) MINIMUM. THE (5.0 FT) DIMENSION SHALL BE PROVIDED IN THE DIRECTION OF THE RAMP RUN.
5. THE RUNNING SLOPE OF THE CURB RAMP SHALL CUT THROUGH OR SHALL BE BUILT UP TO THE CURB AT RIGHT ANGLES OR SHALL MEET THE GUTTER GRADE BREAK AT RIGHT ANGLES WHERE THE CURB IS CURVED. THE RUNNING SLOPE OF THE CURB SHALL BE 5.0% MINIMUM AND 8.3% MAXIMUM BUT SHALL NOT REQUIRE THE RAMP LENGTH TO EXCEED (15.0 FT). THE RUNNING SLOPE OF THE TURNING SPACE SHALL BE 2.0% MAXIMUM.
6. DETECTABLE WARNING SURFACE SHALL BE WET SET INSERT, STAMPING SHALL NOT BE PERMITTED, AND SHALL BE RED BRICK IN COLOR.
7. WHEN NO OBSTRUCTION IS PRESENT CURB TAPER SHALL BE AT 12:1 SLOPE AND WINGS SHALL BE SEED.

NOTES:
DETECTABLE WARNING SURFACE SHALL BE BRICK RED CAST IN PLACE (WET-SET) REPLACEABLE TILES BY ADA SOLUTIONS, INC. OR APPROVED EQUAL.

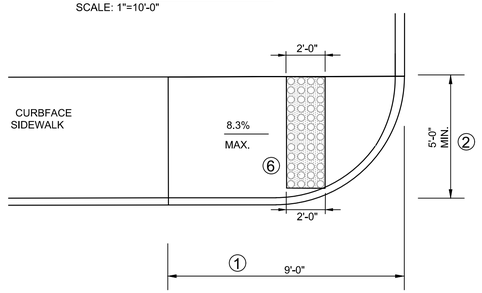

ADA RAMP DETAIL - TYPE C

NOT TO SCALE

SPOT ELEVATION LEGEND

800.0±(M.E.)	MATCH EXISTING ELEVATION
800.00	SPOT ELEVATION
C:800.00	TOP OF CURB ELEVATION
G:800.00	GUTTER ELEVATION
RIM:800.00	RIM ELEVATION
BOW:800.00	BACK OF WALK ELEVATION

CONTOUR LEGEND

800	PROPOSED CONTOUR
800	EXISTING CONTOUR

For Public Viewing Only-Not For Downloading

COMMONWEALTH ENGINEERS, INC.
A wealth of resources to master a common goal.
https://commonwealthengineers.com/

BRIAN KREED WILSON
REGISTERED
No. PE11900866
STATE OF
INDIANA
PROFESSIONAL ENGINEER
Brian Wilson
Signature
8/15/2025
Date

CITY OF KOKOMO, INDIANA
HOWARD COUNTY

NORTH SIDE INTERCEPTOR
IMPROVEMENTS PROJECT

© 2025 BY COMMONWEALTH ENGINEERS, INC. ALL RIGHTS RESERVED. REPRODUCTION BY ANY METHOD IN WHOLE OR IN PART WITHOUT PERMISSION IS PROHIBITED

Know what's below. Call before you dig.
Know what's below. 811 before you dig.
1-800-382-5544
(ITS THE LAW)

No.	Submittal / Revision	By	Date

Designed By:	Drawn By:	Checked By:
BW	BW/CH/EK	JH
Issue Date: 8/2025	Project No: S21082	Scale: AS SHOWN

GRADING DETAILS - W SUPERIOR ST & S WASHINGTON ST

Drawing No:
GR6
Sheet: 94 OF 137

File: Z:\SHARED\IN CLIENTS A-L\KOKOMO\S21082 NORTH SIDE INTERCEPTOR DESIGN\06 CAD\A CURRENT FILES\1 DRAWINGS\07 - S21082 - CROSS SECTIONS.DWG
Saved: 8/19/2025 7:09:19 AM Plotted: 8/19/2025 7:20:05 AM Current User: Eric Kleinrichert LastSavedBy: ekleinrichert

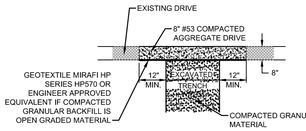

STONE ROAD-DRIVE REPLACEMENT

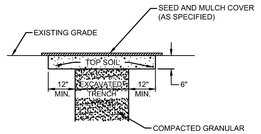

GRASSED AREA

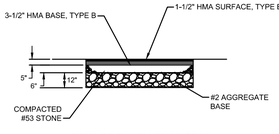

WALK OF EXCELLENCE TRAIL
NO SCALE

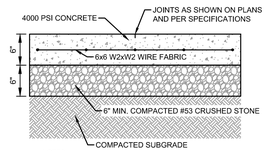

CONCRETE PAVEMENT FOR APPROACHES DETAIL

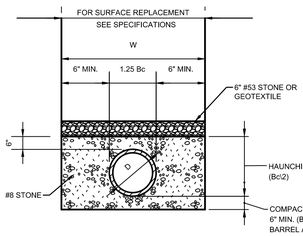

W = MINIMUM ALLOWABLE TRENCH WIDTH FOR PIPE AS PER ASTM D2321
D = PIPE DIAMETER (INTERNAL)
Bc = PIPE DIAMETER (EXTERNAL)

NOTES:

1. COMPACTED #8 STONE AND HAUNCHING STOP AT 6 INCHES ABOVE THE TOP OF THE PIPE. BACKFILLING ABOVE THIS POINT SHALL BE IN ACCORDANCE WITH THE DETAILED SPECIFICATIONS AND AS REQUIRED HEREIN.
2. WORK FALLING UNDER THE JURISDICTION OF THE INDIANA DEPARTMENT OF TRANSPORTATION (INDOT) SHALL UTILIZE COMPACTED GRANULAR BACKFILL MATERIAL FOR INITIAL AND FINAL BACKFILL ANYWHERE WITHIN 12 FEET OF THE EDGE OF PAVEMENT, FOR ALL OTHER NON-INDOT PAVEMENT AREAS (INCLUDING BOTH HARD SURFACED AND COMPACTED AGGREGATE), COMPACTED GRANULAR BACKFILL MATERIAL SHALL BE USED WITHIN 5 FEET OF THE EDGE OF THE PAVEMENT.
3. COARSE-GRADED, CRUSHED AGGREGATES UTILIZED FOR PIPE BEDDING, INITIAL BACKFILL, AND TRENCH BACKFILL SHALL BE ENVELOPED IN NON-WOVEN POLYPROPYLENE GEOTEXTILE OR 6" OF INDOT #53 STONE TO PREVENT MIGRATION OF FINER SANDS, AGGREGATES, AND NATIVE SOILS INTO THE COARSER CRUSHED AGGREGATES.

TRENCH DETAIL FOR RIGID CONDUITS
NO SCALE

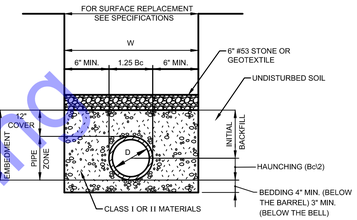

W = MAXIMUM ALLOWABLE TRENCH WIDTH FOR PIPE AS PER ASTM NOT TO EXCEED FOUR (4) FEET FOR 6" THROUGH 24" PIPE NOR SIX (6) FEET FOR 27" THROUGH 48" PIPE
D = PIPE DIAMETER (INTERNAL)
Bc = PIPE DIAMETER (EXTERNAL)

NOTES:

1. COMPACTED INITIAL BACKFILL SHALL EXTEND A MINIMUM OF 12" ABOVE THE TOP OF THE PIPE. FINAL BACKFILL ABOVE THIS POINT SHALL BE IN ACCORDANCE WITH THE SPECIFICATIONS AND AS REQUIRED HEREIN.
2. WHEN CLASS I MATERIAL IS USED FOR BEDDING, HAUNCHING, AND INITIAL BACKFILL COMPACTION MAY BE ACCOMPLISHED BY HAND OR MECHANICAL TAMPING, OR BY WALKING TO A MINIMUM OF 85% STANDARD PROCTOR DENSITY.
3. WHEN CLASS II MATERIAL IS USED FOR BEDDING, HAUNCHING, AND INITIAL BACKFILL COMPACTION MAY BE ACCOMPLISHED BY HAND OR MECHANICAL TAMPING TO A MINIMUM OF 85% STANDARD PROCTOR DENSITY.
4. WORK FALLING UNDER THE JURISDICTION OF THE INDIANA DEPARTMENT OF TRANSPORTATION (INDOT) SHALL UTILIZE COMPACTED GRANULAR BACKFILL MATERIAL FOR INITIAL AND FINAL BACKFILL ANYWHERE WITHIN 12 FEET OF THE EDGE OF PAVEMENT. FOR ALL OTHER NON-INDOT PAVEMENT AREAS (INCLUDING BOTH HARD SURFACED AND COMPACTED AGGREGATE), COMPACTED GRANULAR BACKFILL MATERIAL SHALL BE USED WITHIN 5 FEET OF THE EDGE OF THE PAVEMENT.
5. COARSE-GRADED, CRUSHED AGGREGATES UTILIZED FOR PIPE BEDDING, INITIAL BACKFILL, AND TRENCH BACKFILL SHALL BE ENVELOPED IN NON-WOVEN POLYPROPYLENE GEOTEXTILE OR 6" OF INDOT #53 STONE TO PREVENT MIGRATION OF FINER SANDS, AGGREGATES, AND NATIVE SOILS INTO THE COARSER CRUSHED AGGREGATES.

TRENCH DETAIL FOR FLEXIBLE CONDUITS
NO SCALE

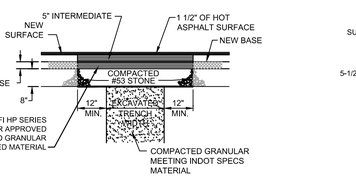

SURFACE RESTORATION DETAIL
FOR ASPHALT PAVEMENT - STATE ROAD
NO SCALE

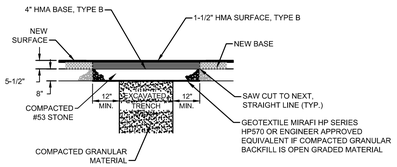

LOCAL ASPHALT PAVEMENTS - ROADS, DRIVES, ALLEYS, AND PARKING AREAS WITHIN PUBLIC RIGHT-OF-WAY

SURFACE REPLACEMENT DETAILS
NO SCALE

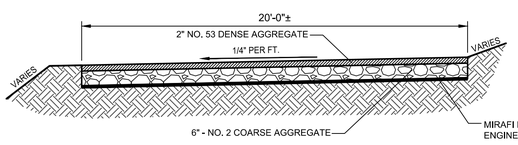

TEMPORARY STONE ACCESS DRIVE
NO SCALE

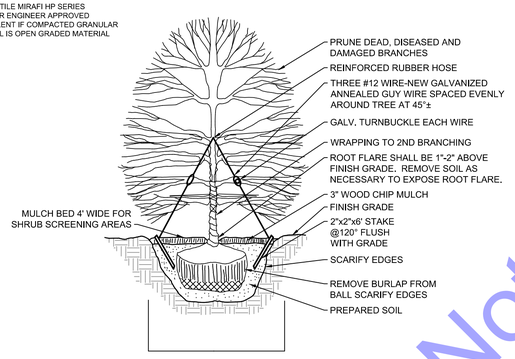

TREE/SHRUB PLANTING DETAIL
NO SCALE

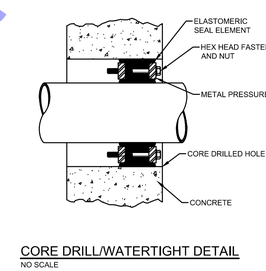

CORE DRILL/WATERTIGHT DETAIL
NO SCALE

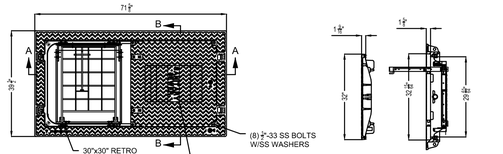

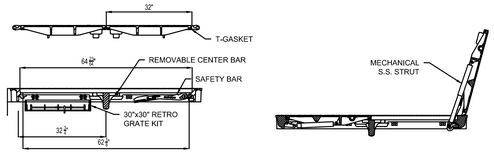

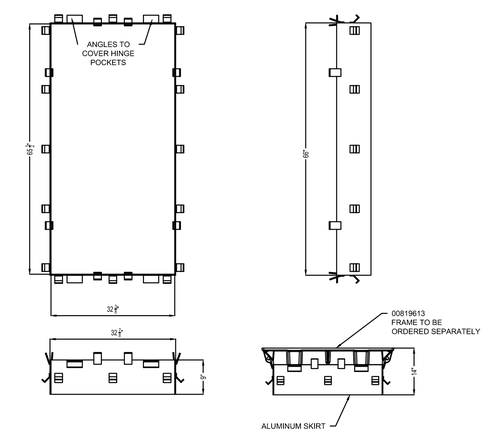

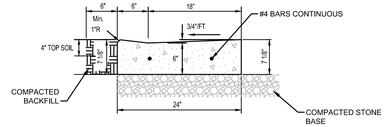

TYPICAL CONCRETE DEPRESSED CURB AND GUTTER DETAIL
NO SCALE

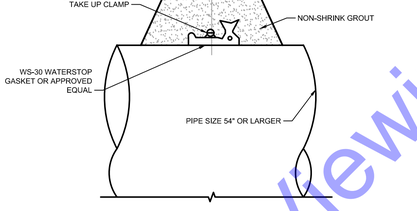

GROUTING RING DETAIL
NO SCALE

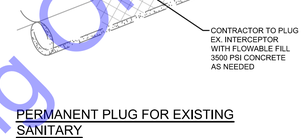

PERMANENT PLUG FOR EXISTING SANITARY
NO SCALE

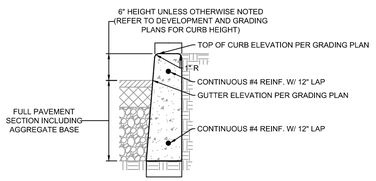

CONCRETE CURB DETAIL
NOT TO SCALE

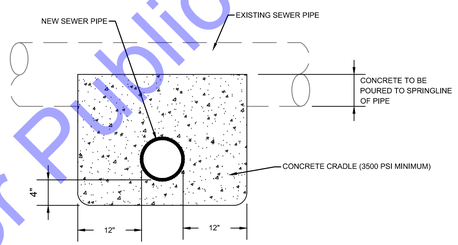

CONCRETE CRADLE DETAIL
NO SCALE

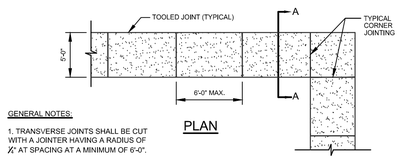

GENERAL NOTES:

1. TRANSVERSE JOINTS SHALL BE CUT WITH A JOINTER HAVING A RADIUS OF ¼" AT SPACING AT A MINIMUM OF 6'-0".
2. SIDEWALK SHALL BE 6" WITH 8" OF COMPACTED AGGREGATE No. 53 AT ALL DRIVEWAY CROSSINGS.

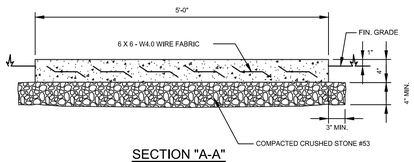

CONCRETE SIDEWALK DETAIL
NO SCALE

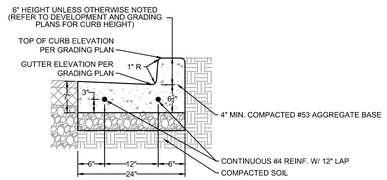

STRAIGHT CURB & GUTTER DETAIL
NOT TO SCALE

For Public Viewing Only-Not For Downloading

COMMONWEALTH ENGINEERS, INC.
A wealth of resources to master a complex job.
https://commonwealthengineers.com/

BRIAN KREED WILSON
REGISTERED
No. PE11900866
STATE OF INDIANA
PROFESSIONAL ENGINEER
Brian Wilson
Signature
8/15/2025
Date

CITY OF KOKOMO, INDIANA
HOWARD COUNTY

NORTH SIDE INTERCEPTOR
IMPROVEMENTS PROJECT

© 2025 BY COMMONWEALTH ENGINEERS, INC. ALL RIGHTS RESERVED. REPRODUCTION BY ANY METHOD IN WHOLE OR IN PART WITHOUT PERMISSION IS PROHIBITED

Know what's below. Call before you dig.
1-800-382-5544 (ITS THE LAW)

No.	Submittal / Revision	By	Date

Designed By:	Drawn By:	Checked By:
BW	BW/CH/EK	JH
Issue Date:	Project No:	Scale:
8/2025	S21082	AS SHOWN

MISCELLANEOUS DETAILS

Drawing No:
MD1
Sheet: 95 OF 137

File: Z:\SHARED\IN CLIENTS A-L\KOKOMO\S21082 NORTH SIDE INTERCEPTOR DESIGN\06 CAD\A CURRENT FILES\1 DRAWINGS\08 - S21082 - MISC DETAILS.DWG
Saved: 8/13/2025 11:35:50 AM Plotted: 8/13/2025 11:37:18 AM Current User: Brian Waterman LastSavedBy bwaterman

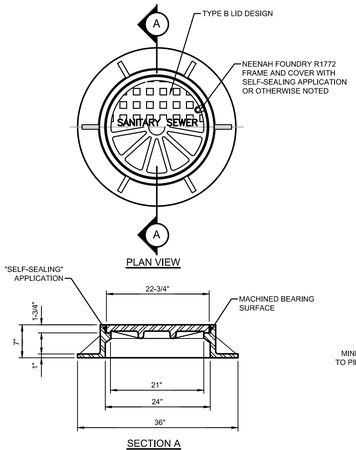

SANITARY SEWER MANHOLE
FRAME AND COVER - STANDARD MANHOLE
NO SCALE

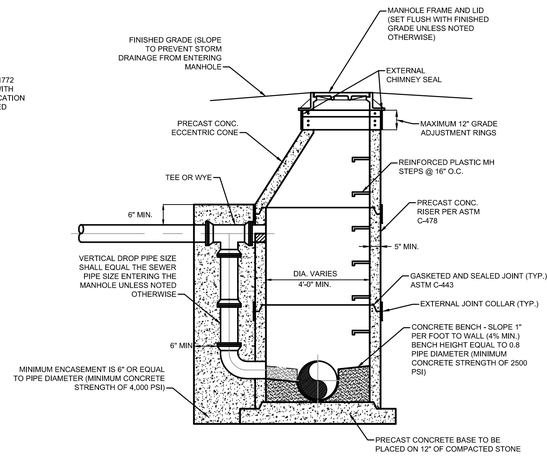

PRECAST DROP MANHOLE DETAIL
NO SCALE

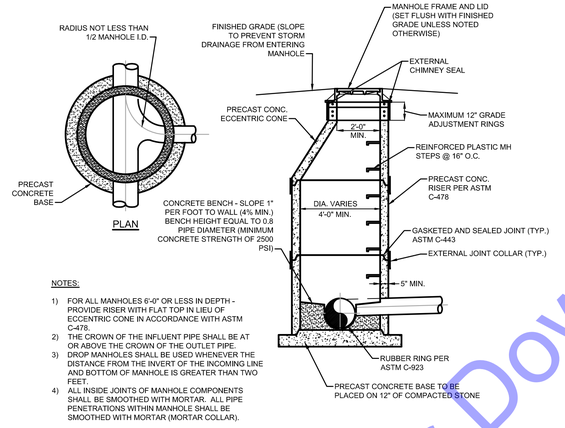

NOTES:

1) FOR ALL MANHOLES 6'-0" OR LESS IN DEPTH - PROVIDE RISER WITH FLAT TOP IN LIEU OF ECCENTRIC CONE IN ACCORDANCE WITH ASTM C-478.
2) THE CROWN OF THE INFLUENT PIPE SHALL BE AT OR ABOVE THE CROWN OF THE OUTLET PIPE.
3) DROP MANHOLES SHALL BE USED WHENEVER THE DISTANCE FROM THE INVERT OF THE INCOMING LINE AND BOTTOM OF MANHOLE IS GREATER THAN TWO FEET.
4) ALL INSIDE JOINTS OF MANHOLE COMPONENTS SHALL BE SMOOTHED WITH MORTAR. ALL PIPE PENETRATIONS WITHIN MANHOLE SHALL BE SMOOTHED WITH MORTAR (MORTAR COLLAR).

STANDARD MANHOLE DETAIL
NO SCALE

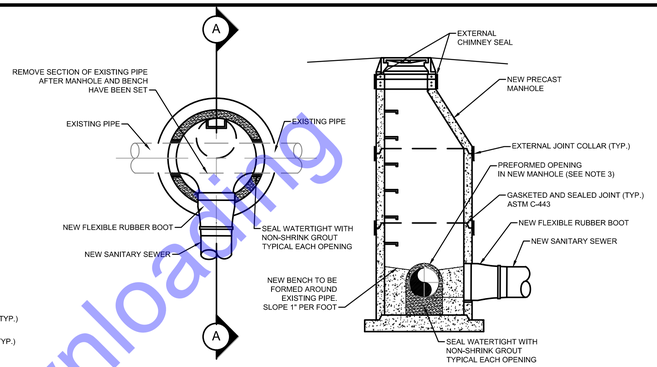

GENERAL NOTES:

1. NEW "DOG-HOUSE" MANHOLE SHALL BE AS SPECIFIED FOR STANDARD MANHOLES IN WM-9 "STANDARD MANHOLES"

2. ALL REINFORCING SHALL MEET ASTM C-478

3. HOLES IN PRECAST UNITS SHALL BE 4" MIN. TO 8" MAX. LARGER THAN THE OUTSIDE DIAMETER OF THE PROPOSED PIPE

NEW "DOG-HOUSE" MANHOLE OVER EXISTING SEWER DETAIL
NO SCALE

NOTES:

1. NORMAL LATERAL SLOPE IS 1/4" PER FOOT MINIMUM LATERAL SLOPE IS 1/8" PER FOOT
2. MINIMUM COVER IS 5 FEET OVER PIPE
3. WHERE EXISTING SANITARY SERVICE LATERALS ARE TO BE RECONNECTED TO NEW SEWERS, CONTRACTOR SHALL REPLACE THE SANITARY SERVICE LATERAL COMPLETE FROM THE NEW SEWER TO THE RIGHT-OF-WAY OR PROPERTY LINE.
4. PROVIDE NEW CLEANOUT AT RIGHT-OF-WAY OR PROPERTY LINE FOR ALL SANITARY SERVICE LATERAL CONNECTIONS.

PLAN VIEW

BOLTED MANHOLE FRAME
NEENAH FOUNDRY 1772B
NO SCALE

WATERPROOF MANHOLE FRAME & BOLTED LID
NEENAH FOUNDRY R-1916F

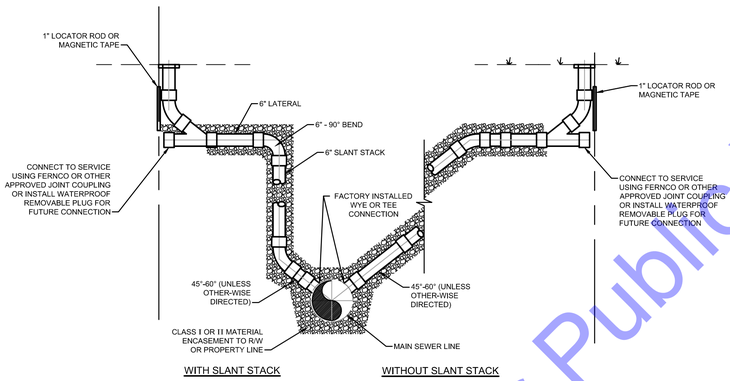

SERVICE CONNECTION DETAIL
NO SCALE

CONTRACTOR SHALL PROVIDE "AS-BUILT" SERVICE CONNECTION TIES TO THE OWNER ENGINEER, AND PROPERTY OWNER

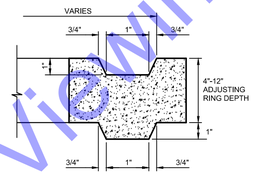

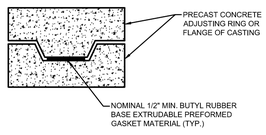

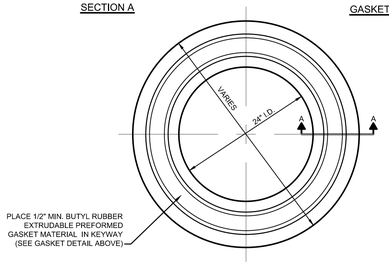

ADJUSTING RING DETAIL
NO SCALE

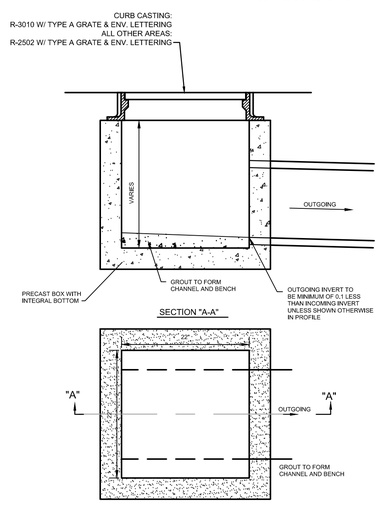

STANDARD BOX INLET DETAIL
NO SCALE

MANHOLE PIPE SIZES				
TYPE	DIA. "G"	DIA. "F"	MAXIMUM PIPE SIZE RIGHT ANGLE TO MAINLINE (INCHES)	MAXIMUM PIPE SIZE FOR MAINLINE (INCHES)
J	24" TO 36"	5'-0"	30"	36"
K	>36" TO 48"	6'-0"	36"	48"
L	>48" TO 54"	8'-0"	48"	54"
M	>54" TO 72"	8'-6"	66"	72"
N	>72" TO 84"	9'-0"	72"	84"

MANHOLE BASE, RISER AND REDUCER CAP
FOR PIPES 24" THRU 84"
SCALE: N.T.S.

30" DIAMETER STORM INLET DETAIL
NO SCALE

For Public Viewing Only - Not For Downloading

COMMONWEALTH ENGINEERS, INC.
A wealth of resources to master a common goal.
https://commonwealthengineers.com/

BRIAN KREED WILSON
REGISTERED
No. PE11900866
STATE OF INDIANA
PROFESSIONAL ENGINEER
Brian Wilson
Signature
8/15/2025
Date

CITY OF KOKOMO, INDIANA
HOWARD COUNTY

NORTH SIDE INTERCEPTOR IMPROVEMENTS PROJECT

© 2025 BY COMMONWEALTH ENGINEERS, INC. ALL RIGHTS RESERVED. REPRODUCTION BY ANY METHOD IN WHOLE OR IN PART WITHOUT PERMISSION IS PROHIBITED

Know what's below. Call before you dig.
1-800-382-5544
(IYS THE LAW)

No.	Submittal / Revision	By	Date

Designed By:	Drawn By:	Checked By:
BW	BW/CH/EK	JH
Issue Date:	Project No:	Scale:
8/2025	S21082	AS SHOWN

MISCELLANEOUS DETAILS

Drawing No:
MD2
Sheet: 96 OF 137

File: Z:\SHARED\IN CLIENTS A-L\KOKOMO\S21082 NORTH SIDE INTERCEPTOR DESIGN\06 CAD\A CURRENT FILES\1 DRAWINGS\08 - S21082 - MISC DETAILS.DWG
Saved: 8/7/2025 9:23:59 AM Plotted: 8/7/2025 5:34:51 PM Current User: Bryce Persinger LastSavedBy: bpersinger

SECTION A: CONSTRUCTION PLAN _ GENERAL PLAN COMPONENTS

A1 INDEX OF THE LOCATION OF REQUIRED PLAN ELEMENTS IN THE CONSTRUCTION PLAN:

This document represents the plan index. The content is organized around the Indiana Department of Environmental Management (IDEM) Construction General Stormwater Permit / Stormwater Pollution Prevention Plan development guidance. Details are specific to the City of Kokomo North Side Interceptor Improvements Project.

A2 A VICINITY MAP DEPICTING THE PROJECT SITE LOCATION IN RELATIONSHIP TO RECOGNIZABLE LOCAL LANDMARKS, TOWN, AND MAJOR ROADS:

This information has been included and is shown in the plans. Aerial site maps illustrating the approximate extent of the projects are shown in the plans. All construction will take place in existing right of ways or land owned by the City of Kokomo.

A3 NARRATIVE OF THE NATURE AND PURPOSE OF THE PROJECT:

The North Side Interceptor Basin Improvements Project is the final phase of the city's Combined Sewer Overflow (CSO) Long Term Control Plan (LTCP). This project includes improvements to achieve compliance with the City's CSO LTCP by providing additional capacity in the collection system to limit the number of overflows from occurring. The improvements are located along Wildcat Creek in Kokomo, Indiana.

These improvements include approximately 7,070 linear feet of gravity sanitary sewer ranging from eighteen (18) to seventy-eight (78) inches in diameter installed using an open-cut construction method. Diversion structures at CSO 014 and CSO 018 will be constructed to divert flow to the proposed interceptor. When depths reach a set level, the excess flow will go to the existing interceptor. Furthermore, the outfall for CSO 022 will be relocated and capacity improvements will be made at CSO 016. The project also includes 2,990 linear feet of existing North Side Interceptor cleaning.

A4 LATITUDE AND LONGITUDE TO THE NEAREST FIFTEEN (15) SECONDS:

40°29'03'' N and 86°08'30'' W

A5 LEGAL DESCRIPTION OF THE PROJECT SITE:

The City of Kokomo is located in Center Township, Howard County, Indiana. The project is located in Sections 35 and 36 of Township 24N Range 3E. The approximate latitude and longitude of the center of the project is:
40°29'03'' N and 86°08'30'' W

A6 11 x 17-INCH PLAT SHOWING BUILDING LOT NUMBERS / BOUNDARIES AND ROAD LAYOUTS / NAMES:

Refer to the plan sheets for the proposed project.

A7 BOUNDARIES OF THE 100-YEAR FLOODPLAINS, FLOODWAY FRINGES, AND FLOODWAYS:

The floodplains, floodway fringes, and floodways located within the project area are shown in the SWPPP (SW1) Exhibit #1 and in the Sediment and Erosion Control Plan, Appendix A - Figures.

A8 LAND USE OF ALL ADJACENT PROPERTIES:

Land use at the project site and the surrounding areas is shown in the SWPPP (SW1) Exhibit #2. Land use in the project areas and the adjacent properties is entirely low, medium, and high intensity developed land and developed open space.

A9 IDENTIFICATION OF A U.S. EPA APPROVED ESTABLISHED TMDL:

The project area is located within the drainage basin, Cannon-Goyer Ditch-Wildcat Creek (051201070109)

A10 NAME OF THE RECEIVING WATER:

The receiving water body in the project area is Wildcat Creek.

A11 IDENTIFICATION OF DISCHARGES TO A WATER ON THE CURRENT 303(D) LIST OF IMPAIRED WATER AND THE POLLUTANT FOR WHICH IT IS IMPAIRED.

Portions of the Wildcat Creek are on the 303(D) List of Impaired Waters as Category 5 (PCBs in fish tissue) and Category 4A (E. coli).

A12 SOILS MAP OF THE PREDOMINATE SOIL TYPES:

The soils map for this project is shown in the SWPPP (SW1) Exhibit #3. The soil map and descriptions for this project are shown in the Sediment and Erosion Control Plan , Appendix A- Figures. The project area contains silty loams, made land, and clay loams.

A13 IDENTIFICATION OF ALL KNOWN WETLANDS, LAKES, AND WATER COURSES ON OR ADJACENT TO THE PROJECT SITE:

The wetlands map for this project is shown in the SWPPP (SW1) Exhibit #4 and is in the Sediment and Erosion Control Plan, Appendix A - Figures.

A14 IDENTIFICATION OF ANY OTHER STATE OR FEDERAL WATER QUALITY PERMITS OR AUTHORIZATIONS THAT ARE REQUIRED FOR CONSTRUCTION ACTIVITIES:

For this project, an IDNR Construction in a Floodway Permit is required as well as an USACE 401 WQ and an IDEM Sanitary Sewer Construction Permit. The IDNR Construction in a Floodway Permit and the USACE 401 WQ permits were both submitted on June 6th, 2025. The IDEM Construction Permit was approved on June 4th, 2025.

A15 IDENTIFICATION AND DELINEATION OF EXISTING VEGETATIVE COVER, INCLUDING NATURAL BUFFERS:

Land use at the project site and the surrounding areas is shown in the SWPPP (SW1) Exhibit #2.

A16 EXISTING TOPOGRAPHY SITE TOPOGRAPHY AT AN INTERVAL APPROPRIATE TO SHOW DETAILED DRAINAGE PATTERNS:

Detailed contour lines are shown on the plan sheets to indicate drainage patterns within the construction limits. See sheets PP1 - PP12.

A17 LOCATION(S) WHERE RUN-OFF ENTERS THE PROJECT SITE:

Detailed contour lines are shown on the plan sheets to indicate drainage patterns within the construction limits. See sheets PP1 - PP12.

A18 LOCATION(S) WHERE RUN-OFF DISCHARGES FROM THE PROJECT SITE PRIOR TO LAND DISTURBANCE:

Detailed contour lines are shown on the plan sheets to indicate drainage patterns within the construction limits. See sheets PP1 - PP12.

A19 LOCATIONS OF ALL EXISTING STRUCTURES ON THE PROJECT SITE:

The location of all existing structures within the project site is shown on the plans. See sheet G5 and sheets D1 - D8.

A20 EXISTING PERMANENT RETENTION OR DETENTION FACILITIES, INCLUDING MANMADE WETLANDS, DESIGNED FOR THE PURPOSE OF STORMWATER MANAGEMENT:

There are no manmade retention or detention facilities in the project area.

A21 LOCATION WHERE STORMWATER MAY BE DIRECTLY DISCHARGED INTO GROUND WATER, SUCH AS ABANDONED WELLS, SINKHOLES OR KARST FEATURES:

There are no abandoned wells, sinkholes, or karst features located within the project area.

A22 SIZE OF THE PROJECT AREA EXPRESSED IN ACRES:

The total project area is approximately 9.2 acres.

A23 TOTAL EXPECTED LAND DISTURBANCE EXPRESSED IN ACRES:

The total expected land disturbance for the project is approximately 9.2 acres.

A24 PROPOSED FINAL TOPOGRAPHY:

The plan sheets show proposed site topography and drainage patterns. See sheets GR1 - GR6.

A25 LOCATIONS AND APPROXIMATELY BOUNDARIES OF ALL DISTURBED AREAS:

The plans show the locations and boundaries of all disturbed areas / construction limits. See sheets EC1 through EC13 for approximate construction limits. Construction limits must be contained within the easements or existing right-of-way. Construction limits / trench width will depend on the contractor's means and methods. In construction areas where there is not a right-of-way or easement between the Work and the Wildcat Creek, construction activities shall only occur past asphalt removal/replacement where noted on the Drawings.

A26 LOCATIONS, SIZE, AND DIMENSIONS OF ALL STORMWATER DRAINAGE SYSTEMS SUCH AS CULVERTS, STORMWATER SEWER AND CONVEYANCE CHANNEL:

The existing stormwater drainage systems are shown on the plans. All existing stormwater systems will be protected and maintained during construction. If during construction any damage is done to an existing stormwater system, damaged structures will be either repaired or placed to equal or better condition than existing. See sheets D1 - PP12 for stormwater construction plans.

A27 LOCATIONS OF SPECIFIC POINTS WHERE STORMWATER AND NON-STORMWATER DISCHARGES WILL LEAVE THE PROJECT SITE:

Locations where stormwater and non-stormwater discharges will leave the project site can be seen on the plans. The project's most downstream outlet is downstream of EX. STM INV. 974 on sheet D1.

A28 LOCATION OF ALL PROPOSED SITE IMPROVEMENTS, INCLUDING ROADS, UTILITIES, LOT DELINEATION AND IDENTIFICATION, PROPOSED STRUCTURES, AND COMMON AREAS:

Location of all proposed site improvement, including proposed utilities, structures, and lot boundaries, are shown on the plans. See sheets D1 - PP12. No off-site construction is anticipated for this project.

A29 LOCATIONS OF ALL ON-SITE AND OFF-SITE SOIL STOCKPILES AND BORROW AREAS:

Stockpiles left inactive for seven (7) days or more shall be stabilized with temporary seed and surrounded by silt fence or other perimeter controls. All stockpiles and borrow areas, if required for the project will be located on-site and the contractor will be required to obtain a permit or release for proper disposal of excavated materials.

A30 CONSTRUCTION SUPPORT ACTIVITIES THAT ARE EXPECTED TO BE PART OF THE PROJECT:

Staging areas, material storage, and concrete washout areas are dependent on the Contractor's means and methods and thus are not shown on the plans. The Contractor shall locate such areas to prevent wastes from entering the Wildcat Creek. Such areas will be seeded appropriately, as required in the Construction General Stormwater Permit, when not in use for a period of 7 days or more.

A31 LOCATION OF ANY IN-STREAM ACTIVITIES THAT ARE PLANNED FOR THE PROJECT INCLUDING, BUT NOT LIMITED TO, STREAM CROSSINGS AND PUMP AROUNDS:

There will be in-stream activity for this project located at the point where Line B outlets to Wildcat Creek. At this location, construction of water diversion structures is anticipated.

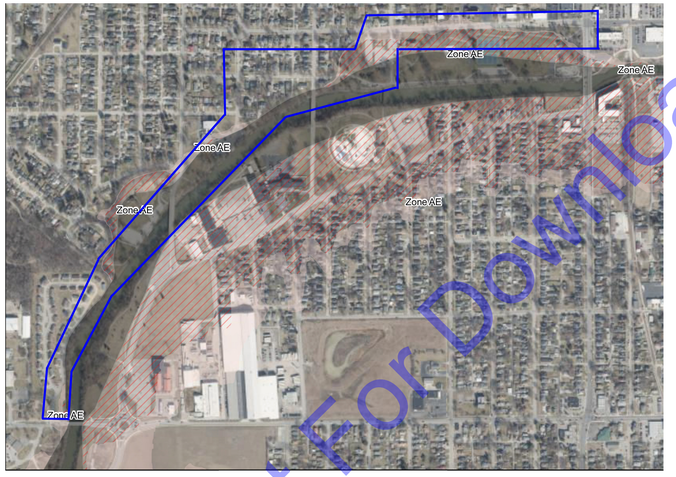

May 14, 2024
1:10,000
0 0.05 0.1 0.2 mi
0 0.1 0.2 0.4 km
FIRM Flood Hazard Zones 2023
AE,<Null>
AE,FLOODWAY
X,0.2 PCT ANNUAL CHANCE FLOOD HAZARD
Indiana Geographic Information Office (IGIO)

EXHIBIT #1 FLOODPLAINS MAP

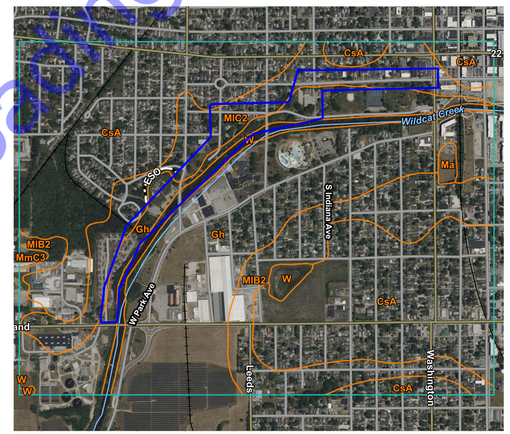

Map Scale: 1:12,400 if printed on A landscape (11" x 8.5") sheet.
Meters 0 150 300 600 900
Feet 0 500 1000 2000 3000
Map projection: Web Mercator Corner coordinates: WGS84 Edge tics: UTM Zone 16N WGS84

EXHIBIT #3 SOILS MAP

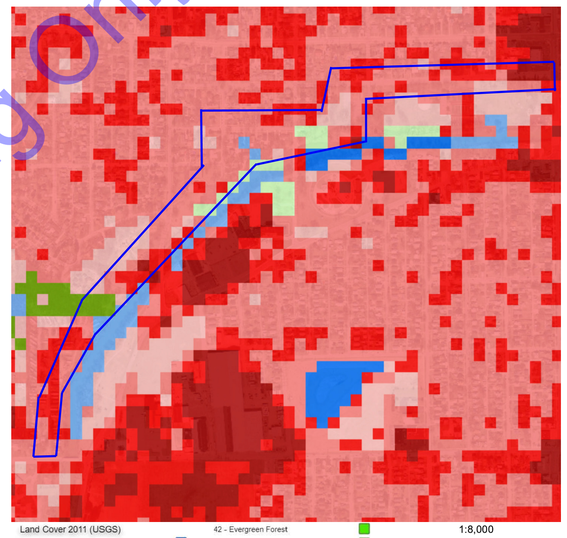

EXHIBIT #2 LAND USE MAP



May 15, 2024
1:10,000
0 0.05 0.1 0.2 mi
0 0.1 0.2 0.4 km
National Wetlands Inventory - NWI Historic Wetlands
National Wetlands Inventory - NWI Indiana Area
National Wetlands Inventory - NWI Wetlands Project Metadata
Indiana Geographic Information Office (IGIO)

EXHIBIT #4 WETLANDS MAP

For Public Viewing Only-Not For Downloading

COMMONWEALTH ENGINEERS, INC.
A wealth of resources to master a common goal.
https://commonwealthengineers.com/

BRIAN KREED WILSON
REGISTERED
No. PE11900866
STATE OF INDIANA
PROFESSIONAL ENGINEER
Signature
8/15/2025
Date

CITY OF KOKOMO, INDIANA
HOWARD COUNTY

NORTH SIDE INTERCEPTOR IMPROVEMENTS PROJECT

© 2025 BY COMMONWEALTH ENGINEERS, INC. ALL RIGHTS RESERVED. REPRODUCTION BY ANY METHOD IN WHOLE OR IN PART WITHOUT PERMISSION IS PROHIBITED

Know what's below. Call before you dig.
1-800-382-5544 (ITS THE LAW)

No.	Submittal Revision	By	Date

Designed By:	Drawn By:	Checked By:
BW	BW/CH/EK	JH
Issue Date: 8/2025	Project No: S21082	Scale: AS SHOWN

SWPP PLAN

Drawing No: SW1
Sheet: 97 OF 137

File: Z:\SHARED\IN CLIENTS A-L\KOKOMO\S21082 NORTH SIDE INTERCEPTOR DESIGN\06 CAD\A CURRENT FILES\1 DRAWINGS\08 - S21082 - SWPPP.DWG
Saved: 8/11/2025 4:30:10 PM Plotted: 8/13/2025 10:25:20 AM Current User: Brian Waterman LastSavedBy: bpersinger

SECTION B: STORMWATER POLLUTION PREVENTION PLAN – CONSTRUCTION COMPONENTS

Stormwater Pollution Prevention Measures shall be in accordance with the local regulatory authority and the applicable MS4 Stormwater Quality Standards.

B1 DESCRIPTION OF THE POTENTIAL POLLUTANT GENERATING SOURCES AND POLLUTANTS, INCLUDING ALL POTENTIAL NON-STORMWATER DISCHARGES:

Description of Potential Pollutant Sources
POTENTIAL POLLUTANT LIST: sediment from exposed soil, paints and coatings, fuel, diesel fuel, equipment lubricating oil, grease, and concrete.

1. The excavation and clearing activities may allow sediment to enter the storm water runoff. The construction activities include site grading, general excavation, trench excavation, aggregate backfilling, pipe installation, and concrete placement. Runoff from these activities is generally controlled by perimeter storm water quality controls and stabilization techniques.

2. Large machinery used for construction is a potential source of pollutants due to the possibility of leaking fuels, miscellaneous lubricating oils, grease, and antifreeze. The equipment is usually parked in a central location and serviced at that location by a service truck each morning prior to start up. The machinery is greased and checked daily prior to use. Activities to minimize the likelihood of pollutant discharge include locating the central parking area away from storm water conveyances and inspecting equipment daily for leaks. Service trucks shall be equipped with spill containment kits in the event of an oil spill. Any spillage of fuel or maintenance oils shall be promptly cleaned up. If a fuel tank is located on site, appropriate secondary containment will be provided.

3. Other ancillary practices have the potential to impact storm water quality. The following measures shall be followed to minimize their impact:

   a. **Temporary Restroom Facilities**
   Temporary restroom facilities shall be provided as required and shall be located to minimize the likelihood of a spill from exiting the site. These facilities shall not be located within 100 feet or directly up gradient from a storm sewer conveyance or additional controls may be necessary. Temporary restroom facilities shall be anchored. Any spillage shall be promptly contained, cleaned-up, and disposed of properly.

   b. **Unused Construction Materials**
   Unused construction materials that may contribute pollutants to stormwater shall be promptly disposed of or removed from the site.

   c. **Garbage, Debris, and General Solid Waste Maintenance**
   The Contractor shall maintain good housekeeping practices. All trash and debris shall be placed in appropriate leak-proof trash containers to prevent contamination of stormwater. No debris shall be disposed of in the construction trench. Trash containers shall not be located on steep slopes or adjacent to any storm sewer conveyance.

   d. **Sediment Clearing and Disposal**
   Sediment clearing involves the removal of sediment contained by a stormwater quality measure, or sediment that has been discharged into roads or other areas. Bulk clearing of sediment shall NOT include flushing the area with water. Large amounts shall be shoveled or scraped, followed by sweeping and brushing. Any roads or other structures damaged by the clearing shall be repaired immediately. Cleared sediment shall be redistributed or disposed properly.

B2 STABLE CONSTRUCTION ENTRANCE LOCATIONS AND SPECIFICATIONS:

The most logical location for the construction entrances are existing Town streets located along and adjacent to the job site. Site access and construction entrance locations will be determined by the Contractor.

B3 SPECIFICATIONS FOR TEMPORARY AND PERMANENT STABILIZATION:

Temporary seeding shall be used for temporary surface stabilization in accordance with the Indiana Storm Water Quality Manual.

Temporary Seeding Recommendations

Seed Species *	Rate/Acre	Planting Depth	Optimum Dates **
Wheat or Rye	150 lbs.	1 to 1-1/2 in.	9/15 to 10/30
Spring Oats	100 lbs.	1 in.	3/1 to 4/15
Annual Ryegrass	40 lbs.	1/4 in.	3/1 to 5/1 8/1 to 9/1
German Millet	40 lbs.	1 to 2 in.	5/1 to 6/1
Sudangrass	35 lbs.	1 to 2 in.	5/1 to 7/30

* Perennial species may be used as a temporary cover, especially if the area to be seeded will remain idle for more than a year.
** Seeding done outside the optimum dates increases the chances of seeding failure.

Permanent seeding shall be used for permanent surface stabilization. See Sediment and Erosion Control Plan , Appendix C - Detailed Specifications, Section 17.

B4 SEDIMENT CONTROL MEASURES FOR CONCENTRATED FLOW AREAS:

Rock check dams are not anticipated but will be used where necessary. For details, see sheet EC 13.

B5 SEDIMENT CONTROL MEASURES FOR SHEET FLOW AREAS:

Silt fences, straw bales, and sandbags will be used where necessary to control sediment runoff from the construction limits. Details are included in the plans. For locations, see sheets EC1 - EC12. For details, see sheet EC 13.

B6 RUNOFF CONTROL MEASURES:

In accordance with the Detailed Specification the Contractor shall be required to provide bypass pumping or fluming in order to maintain maximum conveyance during construction. Bypass pumping will occur at locations where existing flows are to be connected to the North Side Interceptor. These locations are listed in Detailed Specification 4 - Bypass Pumping. See Sediment and Erosion Control Plan, Appendix C – Detailed Specification 4 – Bypass Pumping.

B7 STORMWATER OUTLET PROTECTION LOCATION AND SPECIFICATIONS:

No stormwater outlets are anticipated to be affected by this project.

B8 GRADE STABILIZATION STRUCTURE LOCATIONS AND SPECIFICATIONS:

N/A - Outlet for existing storm sewers are already established.

B9 DEWATERING APPLICATIONS AND MANAGEMENT METHODS:

If dewatering becomes necessary on site, the following methods will be used:

Equipment operators are prohibited from discharging groundwater or accumulated stormwater that is removed from excavations, trenches, vaults, or other similar points of accumulation, unless such waters are first effectively managed by appropriate control measures.

Examples of appropriate control measures include temporary sediment basis or sediment traps, sediment socks, dewatering tanks and bags, or filtration systems (e.g. bag or sand filters) that are designed to remove sediment. Uncontaminated, not-turbid dewatering can be discharged without being routed to a control.

At a minimum, the following discharge requirements must be met for dewatering activities:

1. Allow no discharge of visible sediment or solids.
2. At all points where dewatering is discharged, utilize velocity dissipation devices.
3. Dewatering practices must involve the implementation of appropriate control measures as applicable (i.e. containment areas for weathering earth materials, portable sediment tanks and bags, pumping settling basins, and pump intake protection.

Additional dewatering requirements are defined in the detailed specifications. Dewatering will occur when groundwater is within the excavation and will not be known until construction occurs.

B10 MEASURES UTILIZED FOR WORK WITHIN WATERBODIES:

There will be in-stream activity for this project located at the point where Line 'B' outlets to Wildcat Creek. At this location, construction of temporary water diversion structures is anticipated. More information regarding water diversion structures is included in Detailed Specification 20 – Cofferdams and Surface Water Diversion. See Sediment and Erosion Control Plan, Appendix C – Detailed Specification 20 – Cofferdams and Surface Water Diversion.

B11 MAINTENANCE GUIDELINES FOR EACH PROPOSED STORMWATER QUALITY MEASURE:

Throughout the duration of construction, the Contractor shall monitor and manage project construction and stormwater activities through the administration of a self-monitoring program (SMP). A trained individual shall submit weekly SMP report and event inspection reports as required within 24 hours of every ½" rain event. Inspection will be provided for all erosion and sediment control structures to ensure integrity and effectiveness. Inspections will also be provided for all disturbed areas that have not achieved final stabilization, and at all points of discharge from the construction site. Refer to Appendix C of Sediment and Erosion Control Plan, Section DS-05 for requirements regarding the SMP reports and project management log.

B12 PLANNED CONSTRUCTION SEQUENCE THAT DESCRIBES THE IMPLEMENTATION OF STORMWATER QUALITY MEASURES IN RELATION TO LAND DISTURBANCE:

1. Mark any tree protection zones determined by the Contractor.
2. Install inlet protection on all storm water inlets within the area to be disturbed.
3. Install concrete washout areas.
4. Continuously clean streets as specified.
5. Stabilize any disturbed surface with seeding as specified.
6. Complete final cleaning of streets.
7. Remove temporary inlet protection measures and concrete washout areas.

Permanent Seeding shall be implemented for all disturbed land and shall occur once final grading has been completed. If final grading is completed in winter, appropriate mulch covering shall be implemented until weather allows for permanent seeding. See INDOT Standard Specification 621 for details.

Schedule a pre-construction meeting at least 48 hours in advance of land disturbance. Please contact the erosion control technician at the Howard County Soil and Water Conservation District at 765-457-2144 ext. 2458.

Pre-Construction :

A. notify the Howard County Surveyor.
B. Contact the Indiana Underground Plant Protection Systems, Inc. to verify the location of any and all underground utilities.
C. Exhibit Construction Stormwater Prevention Plan information (SWPPP) at the job site. Contractor shall designate a person responsible for onsite inspections and for providing this SWPPP onsite.
D. Install perimeter protection.

Construction:

A. Establish construction entrance at necessary access point.
B. Contractor shall supply temporary concrete washout when necessary. contractor shall coordinate locations of temporary concrete washouts with owner and engineer.
C. Install erosion control measures as each new item of the project is installed, as required.
D. Begin mass earthwork operations.
E. Install staging areas, material storage areas, and fueling stations.
F. Temporarily seed and mulch disturbed areas if to be left inactive beyond 7 days, seeding must be applied by the end of the seventh day.
G. Begin any necessary trenching for combined sewer pipe or channels.
H. Construct stormwater drainage systems, backfilling as required.
I. Finish grading.
J. Install permanent seeding.

B13 PROVISIONS FOR EROSION AND SEDIMENT CONTROL ON INDIVIDUAL RESIDENTIAL BUILDING LOTS REGULATED UNDER THE PROPOSED PROJECT:

All proposed improvements are taking place within right of ways, utility easements, or land owned by the City of Kokomo. The project area and erosion control are depicted in the plans.

B14 MATERIAL HANDLING AND SPILL PREVENTION PLAN:

1. **List of Expected Materials**
   - Pipe
   - Pipe Fittings and Appurtenances
   - Aggregate backfill
   - Sand bedding
   - Diesel fuel
   - Lubricating Oils
   - Grease
   - Steel
   - Concrete (Cast-In-Place, Pre-Cast)
   - Paint, Coatings

2. **Pipe, Pipe Fittings, and Appurtenances**
   Materials such as pipe, pipe fittings, and pre-cast concrete structures are not foreseen to contribute pollutants to storm water runoff.

3. **Stockpiles (aggregate backfill, sand bedding)**
   Sediment could be released from stockpiles of stone, granular backfill, and sand. To minimize the potential for these materials to enter the storm water runoff, the following measures shall be taken:
   a. Stockpile volumes shall be limited to the amount expected to be used in three (3) days. Maintaining larger stockpiles is discouraged and may require additional erosion controls for adequate protection.
   b. Stockpiles shall not be located on a slope steeper than 2:1 and shall be positioned a minimum of fifty (50) feet away from stormwater conveyances.
   c. Silt Fencing shall be placed down gradient of stockpiles as necessary to prevent sediment transport.

4. **Fuel, Lubricating Oils, Grease**
   There is a potential for a release of fuel, lubricating oils, and grease from on-site machinery due to leaks and during routine maintenance activities. To minimize the potential for these materials to enter the storm water runoff, the following measures shall be taken:
   a. Routine equipment maintenance and fueling activities shall be conducted at locations that minimize the impact of potential spill.
   b. Equipment shall be positioned within the serviceable area of nearby storm water quality controls and away from storm water conveyances during routine maintenance.
   c. Equipment shall be checked daily for leaks and repaired immediately.
   d. Spill control kits consisting of the appropriate oil sorbent socks, boom, and mats shall be provided at all fueling and maintenance areas.
   e. Any leakage or spilled oil shall be cleaned up immediately and properly disposed of in accordance with applicable laws.
   f. If a temporary oil or fuel storage tank is located on site, appropriate secondary containment shall be provided to prevent the off-site release of a spill.

5. **Steel**
   Structural steel to be used on this project is not anticipated to contribute pollutants to stormwater runoff.

6. **Cast-in-Place Concrete**
   If there is excess concrete during placement, it can be discarded on site, away from stormwater conveyances and allowed to set-up. It shall then be disposed of or utilized elsewhere.

7. **Paint Coatings**
   There is a potential for a release of paint or other coatings due to leaks, or spills and during transfer. To minimize the potential for these materials to enter the storm water runoff, the following measures shall be taken:
   a. Containers and application equipment shall be positioned within the serviceable area of nearby storm water quality controls and away from stormwater conveyances.
   b. Containers shall be checked daily for leaks and repaired immediately.
   c. Any leakage or spilled materials shall be cleaned up immediately and properly disposed of in accordance with applicable laws.

8. **327 IAC 2-6.1-7 reportable spills; responsibility**
   Sec. 7. Any person who operates, controls, or maintains any mode of transportation or facility from which a spill occurs shall, upon discovery of a reportable spill to the soil or surface waters of the state, do the following:
   (1) Contain the spill, if possible, to prevent additional spilled material from entering the waters of the state.
   (2) Undertake or cause others to undertake activities needed to accomplish a spill response.
   (3) As soon as possible, but within two (2) hours of discovery, communicate a spill report to the Department of Environmental Management, Office of Land Quality, Emergency response Section: Area Code 1-888-233-7745 for in state calls (toll free), (317) 233-7745 for out-of-state calls. If new or updated spill report information becomes known that indicates a significant increase in the likelihood of damage to the waters of the state, the responsible party shall notify the department as soon as possible but within two (2) hours of the time the new or updated information becomes known.
   (4) Submit to the Indiana Department of Environmental Management, Office of Land Quality, Emergency Response Section (MC 66-30), 2525 N. Shadeland Ave., Suite 100, Indianapolis, IN 46219-1787, a written copy of the spill report if requested in writing by the department.
   (5) Except from modes of transportation other than pipelines, exercise due diligence and document attempts to notify the following:
      a. For spills to surface water that cause damage the nearest affected downstream water user located within ten (10) miles of the spill and in the state of Indiana; and
      b. For spills to solid ground outside the facility boundary, the affected property owner or owners, operator or operators, or occupant or occupants.

9. **Supplemental Spill Prevention Plan Contact Information**
   Location: City of Kokomo
   Owner (Individual): Jon Pyke – Engineering Department Head
   Owner (Company): City of Kokomo
   Address: 100 South Union St
   Phone: (765)-456-7400

   EMERGENCY CONTACTS
   IDEM Spill Line (call within 2 hours of spill): (888) 233 -7745

B15 MATERIAL HANDLING AND STORAGE PROCEDURES ASSOCIATED WITH CONSTRUCTION ACTIVITY:

Fuels, oils, grease, or other petroleum products must be stored in appropriate and approved areas. Preventative maintenance will be required for on-site equipment. Hazardous materials will be required to be stored in a field trailer to avoid any outside storage.

All fuel is to be contained in a mobile service truck or in the construction equipment operating on site. Small containers of oils, grease, and related products may be stored in the Contractor's construction trailer. These items will be required to be inspected regularly to ensure proper storage and handling and to guard against leakage. Defective containers will be removed from the project site immediately.

Debris collection: To prevent clogging of the storm drainage system, litter and debris removal from drainage grates, trash, rocks and ditch lines should be a priority. Construction debris and waste should be removed from the site biweekly or more frequently as needed. Construction material visible to the public should be stored in an orderly manner. Storm water runoff should be prevented from contacting stored solid waste.

Concrete washout: Perform washout of concrete trucks offsite or in designated areas only. Do not wash out concrete trucks into storm drains, open ditches, streets or streams. Do not allow excess concrete to be dumped on site, except in designated areas.

For on-site washout: Due to limited concrete use, an onsite concrete washout basin is not necessary, rather a temporary concrete washout bag shall be utilized when needed. Utilize washout bag at least fifty (50) feet from storm drains, open ditches or bodies of water; wash out wastes into the designated bag, when within the proper area, where the concrete can set and be broken up and then disposed of properly.

SECTION C: STORMWATER POLLUTION PREVENTION – POST CONSTRUCTION COMPONENTS

C1 DESCRIPTION OF POLLUTANTS AND THEIR SOURCES ASSOCIATED WITH THE PROPOSED LAND USE:

Potential post construction pollutants will remain the same as potential pre-developed pollutants since the land use is not changing. These potential pollutants include sediment, fluid leaks from automobiles, trash, and debris from surrounding residents.

C2 DESCRIPTION OF PROPOSED POST-CONSTRUCTION STORMWATER MEASURES:

Other than permanent seeding, no permanent stormwater quality measures will be constructed as a part of this project. Permanent seeding is detailed in Part 8 - Detailed Specification 17 of the Contract Book and Section WM 24 of the Sediment and Erosion Control Plan.

C3 PLAN DETAILS FOR EACH STORMWATER QUALITY MEASURE:

Temporary storm water quality measures will be installed prior to any construction activities. Permanent seeding will be used to stabilize disturbed areas following completion of construction activities in the immediately surrounding area, see EC1 – EC13. Permanent seeding is detailed in Part 3 - Detailed Specification 17 of the Contract Book and WM 24 of the Sediment and Erosion Control Plan.

C4 SEQUENCE DESCRIBING STORMWATER MEASURE IMPLEMENTATION:

Post-construction sequencing measures for this project shall be as follows:

1. Temporary planting will be provided in critical areas devoid of vegetation and subject to erosion. Such temporary plantings may be necessary to protect an area when preparing for winter shut down or to provide cover when permanent seedlings are likely to fail due to an extended period of heat or drought. The intent of these plantings is to provide protective cover while waiting for optimal planting conditions.
2. Removal and cleanup of all temporary erosion control measures including silt fences, inlet and culvert protection areas.
3. The entire construction area is to be inspected and cleaned, including the collection and disposal of construction trash and debris.
4. Permanent seeding and mulching will be installed immediately after achieving final grade or within seven (7) days of inactivity. If necessary, a temporary stabilization practice will be employed until the next prime seeding period.
5. A final site inspection will take place to assure that all requirements of the SWPP, construction drawings, and supporting documentation have been fulfilled.

C5 MAINTENANCE GUIDELINES FOR PROPOSED POST-CONSTRUCTION STORMWATER MEASURES:

All areas receiving permanent seeding will be fertilized and maintained in accordance with the specifications.

C6 ENTITY RESPONSIBLE FOR OPERATION AND MAINTENANCE OF THE POST-CONSTRUCTION STORMWATER MEASURES:

The City of Kokomo will be responsible for the operation and maintenance of post-construction stormwater measures.

For Public Viewing Only – Not For Downloading

COMMONWEALTH ENGINEERS, INC.
A wealth of resources to master a common goal.
https://commonwealthengineers.com/

BRIAN KREED WILSON
REGISTERED
No. PE11900866
STATE OF INDIANA
PROFESSIONAL ENGINEER

Signature 8/15/2025 Date

CITY OF KOKOMO, INDIANA
HOWARD COUNTY

NORTH SIDE INTERCEPTOR IMPROVEMENTS PROJECT

© 2025 BY COMMONWEALTH ENGINEERS, INC. ALL RIGHTS RESERVED. REPRODUCTION BY ANY METHOD IN WHOLE OR IN PART WITHOUT PERMISSION IS PROHIBITED

Indiana 811 — Know what's below. Call before you dig.
Know what's below. 811 before you dig.
1–800–382–5544 (ITS THE LAW)

No.	Submittal / Revision	By	Date

Designed By:	Drawn By:	Checked By:
BW	BW/CH/EK	JH
Issue Date:	Project No:	Scale:
8/2025	S21082	AS SHOWN

SWPP PLAN

Drawing No:
SW2

File: Z:\SHARED\IN CLIENTS A-L\KOKOMO\S21082 NORTH SIDE INTERCEPTOR DESIGN\06 CAD\A CURRENT FILES\1 DRAWINGS\08 – S21082 – SWPPP.DWG
Saved: 8/11/2025 4:30:10 PM Plotted: 8/13/2025 10:25:32 AM Current User: Brian Waterman LastSavedBy: bpersinger

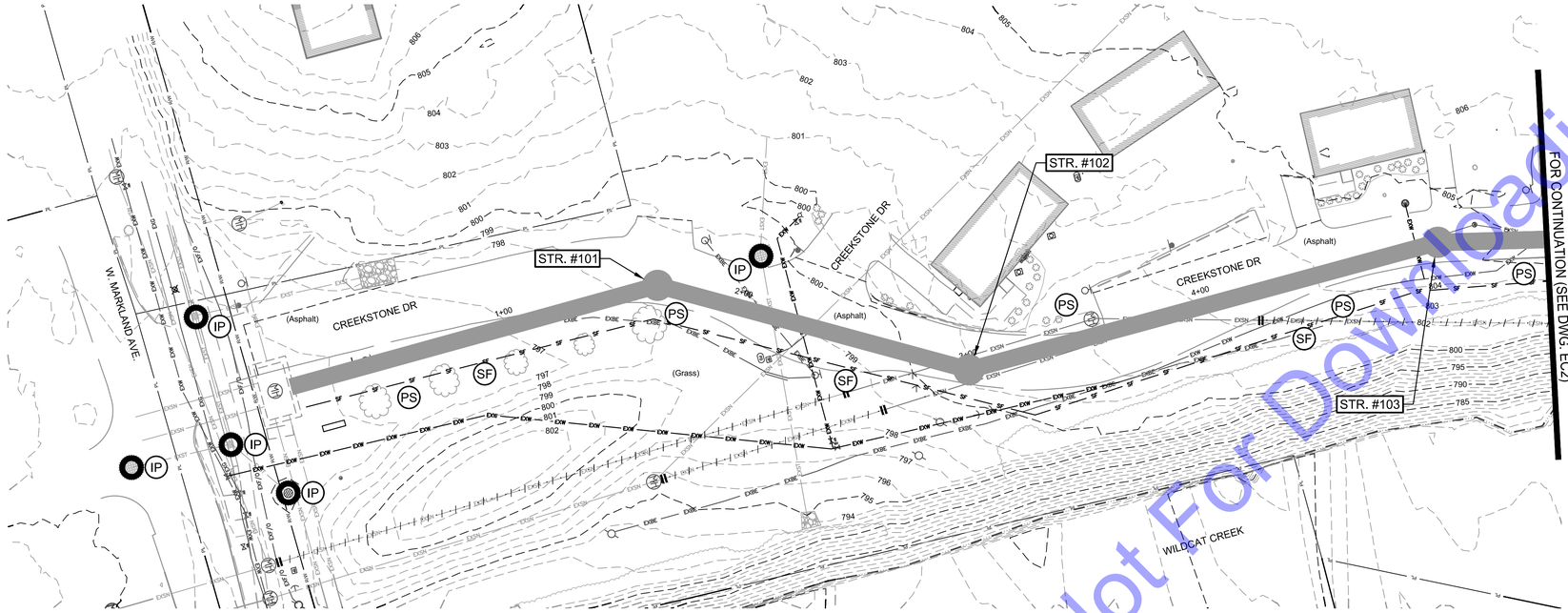

SCALE: 1"=30'

30' 0 30'

EROSION CONTROL PLAN
SCALE: 1"=30'-0"

GENERAL NOTES

1. CONTRACTOR SHALL PROVIDE ADDITIONAL EROSION CONTROL MEASURES, AS SPECIFIED IN THE DETAILED SPECIFICATIONS. THESE SHALL INCLUDE, BUT NOT BE LIMITED TO, CONCRETE WASHING STATIONS, TEMPORARY CONSTRUCTION ENTRANCES, TEMPORARY SEEDING, ETC. AS REQUIRED DURING THE DURATION OF THE PROJECT TO MAINTAIN COMPLIANCE WITH THE IDEM CONSTRUCTION STORM WATER GENERAL PERMIT AND STORM WATER POLLUTION PREVENTION PLAN. CONTRACTOR SHALL ADHERE TO ALL REQUIREMENTS OF SAID IDEM CONSTRUCTION STORM WATER GENERAL PERMIT, INCLUDING PROVIDING REQUIRED NOTIFICATIONS TO REQUIRED AGENCIES.
2. SEE DWG. EC13 FOR EROSION CONTROL DETAILS.
3. CONTRACTOR SHALL APPLY TEMPORARY AND PERMANENT SEEDING IN THE SEQUENCE SPECIFIED IN THE DETAILED SPECIFICATIONS.
4. CONTRACTOR SHALL PROTECT ALL AREAS WITH SLOPES EXCEEDING 4:1 WITH EROSION CONTROL BLANKETS INSTALLED AND STAPLED IN ACCORDANCE WITH MANUFACTURER'S REQUIREMENTS. INSTALL EROSION CONTROL BLANKETS IMMEDIATELY FOLLOWING COMPLETION OF WORK, AFTER TEMPORARY OR PERMANENT SEEDING HAS BEEN COMPLETED.
5. FOR NEW STORM INLETS, CONTRACTOR SHALL INSTALL INLET PROTECTION IMMEDIATELY FOLLOWING INSTALLATION OF INLET AND BACKFILLING.

EROSION CONTROL LEGEND

- SF — SILT FENCE
- EB — EROSION CONTROL BLANKET
- IP — INLET PROTECTION
- PS — PERMANENT SEEDING

For Public Viewing Only-Not For Downloading

COMMONWEALTH ENGINEERS, INC.
A wealth of resources to master a common goal.
https://commonwealthengineers.com/

BRIAN KREED WILSON
REGISTERED
No. PE11900866
STATE OF
INDIANA
PROFESSIONAL ENGINEER
Brian Wilson 8/15/2025
Signature Date

CITY OF KOKOMO, INDIANA
HOWARD COUNTY

NORTH SIDE INTERCEPTOR
IMPROVEMENTS PROJECT

© 2025 BY COMMONWEALTH ENGINEERS, INC. ALL RIGHTS RESERVED. REPRODUCTION BY ANY METHOD IN WHOLE OR IN PART WITHOUT PERMISSION IS PROHIBITED

Indiana 811 Know what's below. Call before you dig.
1-800-382-5544 (ITS THE LAW)

No.	Submittal / Revision	By	Date

Designed By:	Drawn By:	Checked By:
BW	BW/CH/EK	JH
Issue Date: 8/2025	Project No: S21082	Scale: AS SHOWN

EROSION CONTROL PLAN

Drawing No: EC1

Sheet: 99 OF 137

File: Z:\SHARED\N CLIENTS A-L\KOKOMO\S21082 NORTH SIDE INTERCEPTOR DESIGN\06 CAD\A CURRENT FILES\ DRAWINGS\09 - S21082 - EROSION CONTROL.DWG
Saved: 8/13/2025 10:24:09 AM Plotted: 8/13/2025 10:25:58 AM Current User: Brian Waterman LastSavedBy: bwaterman

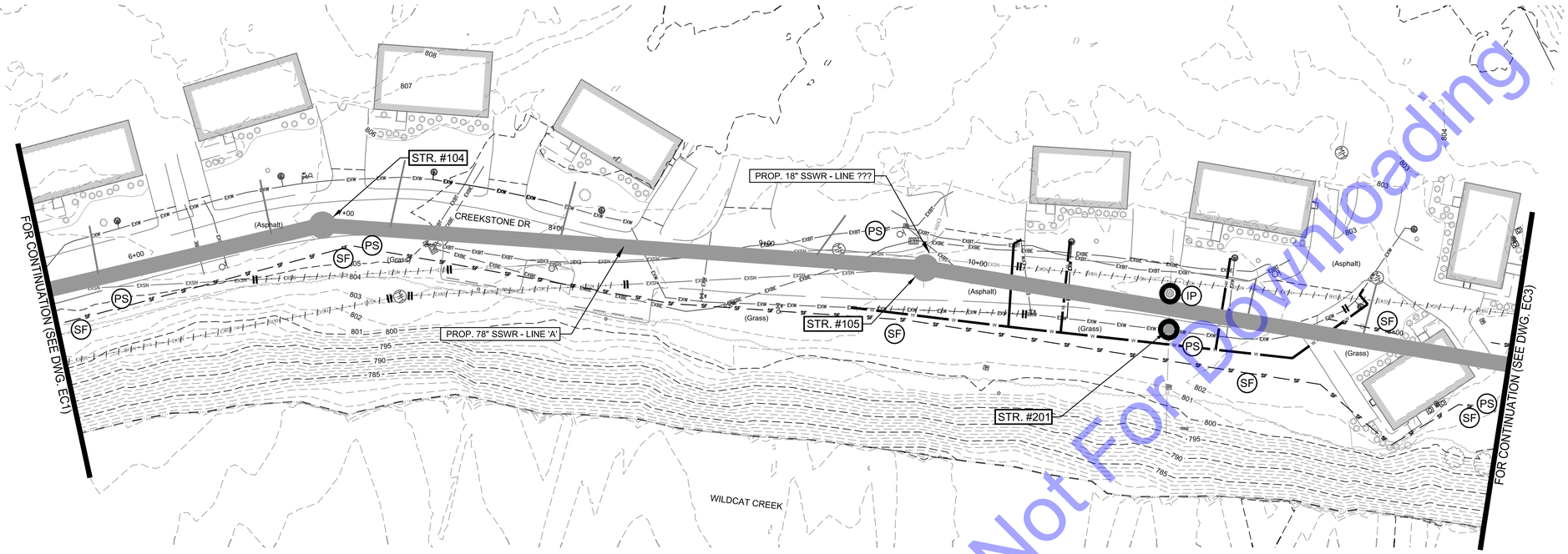

EROSION CONTROL PLAN
SCALE: 1"=30'-0"

GENERAL NOTES

1. CONTRACTOR SHALL PROVIDE ADDITIONAL EROSION CONTROL MEASURES, AS SPECIFIED IN THE DETAILED SPECIFICATIONS. THESE SHALL INCLUDE, BUT NOT BE LIMITED TO, CONCRETE WASHING STATIONS, TEMPORARY CONSTRUCTION ENTRANCES, TEMPORARY SEEDING, ETC. AS REQUIRED DURING THE DURATION OF THE PROJECT TO MAINTAIN COMPLIANCE WITH THE IDEM CONSTRUCTION STORM WATER GENERAL PERMIT AND STORM WATER POLLUTION PREVENTION PLAN. CONTRACTOR SHALL ADHERE TO ALL REQUIREMENTS OF SAID IDEM CONSTRUCTION STORM WATER GENERAL PERMIT, INCLUDING PROVIDING REQUIRED NOTIFICATIONS TO REQUIRED AGENCIES.
2. SEE DWG. EC13 FOR EROSION CONTROL DETAILS.
3. CONTRACTOR SHALL APPLY TEMPORARY AND PERMANENT SEEDING IN THE SEQUENCE SPECIFIED IN THE DETAILED SPECIFICATIONS.
4. CONTRACTOR SHALL PROTECT ALL AREAS WITH SLOPES EXCEEDING 4:1 WITH EROSION CONTROL BLANKETS INSTALLED AND STAPLED IN ACCORDANCE WITH MANUFACTURER'S REQUIREMENTS. INSTALL EROSION CONTROL BLANKETS IMMEDIATELY FOLLOWING COMPLETION OF WORK, AFTER TEMPORARY OR PERMANENT SEEDING HAS BEEN COMPLETED.
5. FOR NEW STORM INLETS, CONTRACTOR SHALL INSTALL INLET PROTECTION IMMEDIATELY FOLLOWING INSTALLATION OF INLET AND BACKFILLING.

EROSION CONTROL LEGEND

- (SF) SILT FENCE
- (EB) EROSION CONTROL BLANKET
- (IP) INLET PROTECTION
- (PS) PERMANENT SEEDING

For Public Viewing Only-Not For Downloading

COMMONWEALTH ENGINEERS, INC.
A wealth of resources to master a common goal.
https://commonwealthengineers.com/

BRIAN KREED WILSON
REGISTERED
No. PE11900866
STATE OF INDIANA
PROFESSIONAL ENGINEER
Brian Wilson 8/15/2025
Signature Date

CITY OF KOKOMO, INDIANA
HOWARD COUNTY

NORTH SIDE INTERCEPTOR
IMPROVEMENTS PROJECT

© 2025 BY COMMONWEALTH ENGINEERS, INC. ALL RIGHTS RESERVED. REPRODUCTION BY ANY METHOD IN WHOLE OR IN PART WITHOUT PERMISSION IS PROHIBITED

Indiana 811 Know what's below. Call before you dig.
Know what's below. 811 before you dig.
1-800-382-5544
(ITS THE LAW)

No.	Submittal / Revision	By	Date

Designed By:	Drawn By:	Checked By:
BW	BW/CH/EK	JH
Issue Date: 8/2025	Project No: S21082	Scale: AS SHOWN

EROSION CONTROL PLAN

Drawing No:
EC2
Sheet: 100 OF 137

File: Z:\SHARED\N CLIENTS A-L\KOKOMO\S21082 NORTH SIDE INTERCEPTOR DESIGN\06 CAD\A CURRENT FILES\ DRAWINGS\09 - S21082 - EROSION CONTROL.DWG
Saved: 8/13/2025 10:24:09 AM Plotted: 8/13/2025 10:26:23 AM Current User: Brian Waterman LastSavedBy: bwaterman

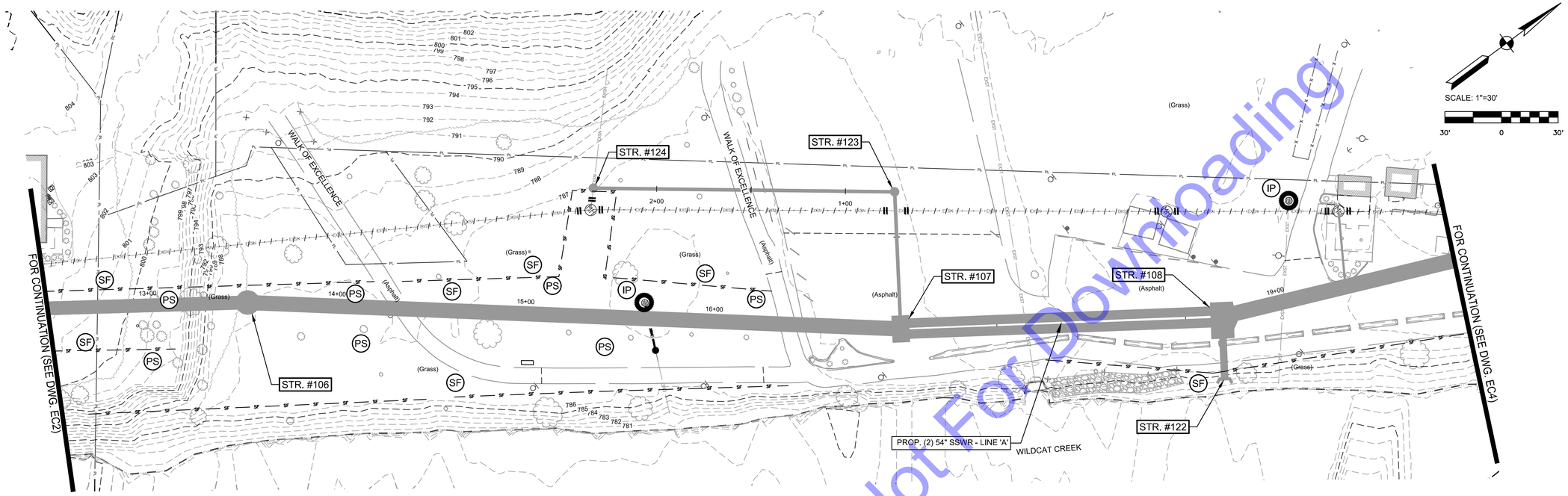

EROSION CONTROL PLAN
SCALE: 1"=30'-0"

For Public Viewing Only-Not For Downloading

GENERAL NOTES

1. CONTRACTOR SHALL PROVIDE ADDITIONAL EROSION CONTROL MEASURES, AS SPECIFIED IN THE DETAILED SPECIFICATIONS. THESE SHALL INCLUDE, BUT NOT BE LIMITED TO, CONCRETE WASHING STATIONS, TEMPORARY CONSTRUCTION ENTRANCES, TEMPORARY SEEDING, ETC. AS REQUIRED DURING THE DURATION OF THE PROJECT TO MAINTAIN COMPLIANCE WITH THE IDEM CONSTRUCTION STORM WATER GENERAL PERMIT AND STORM WATER POLLUTION PREVENTION PLAN. CONTRACTOR SHALL ADHERE TO ALL REQUIREMENTS OF SAID IDEM CONSTRUCTION STORM WATER GENERAL PERMIT, INCLUDING PROVIDING REQUIRED NOTIFICATIONS TO REQUIRED AGENCIES.
2. SEE DWG. EC13 FOR EROSION CONTROL DETAILS.
3. CONTRACTOR SHALL APPLY TEMPORARY AND PERMANENT SEEDING IN THE SEQUENCE SPECIFIED IN THE DETAILED SPECIFICATIONS.
4. CONTRACTOR SHALL PROTECT ALL AREAS WITH SLOPES EXCEEDING 4:1 WITH EROSION CONTROL BLANKETS INSTALLED AND STAPLED IN ACCORDANCE WITH MANUFACTURER'S REQUIREMENTS. INSTALL EROSION CONTROL BLANKETS IMMEDIATELY FOLLOWING COMPLETION OF WORK, AFTER TEMPORARY OR PERMANENT SEEDING HAS BEEN COMPLETED.
5. FOR NEW STORM INLETS, CONTRACTOR SHALL INSTALL INLET PROTECTION IMMEDIATELY FOLLOWING INSTALLATION OF INLET AND BACKFILLING.

EROSION CONTROL LEGEND

- SF — SILT FENCE
- EB — EROSION CONTROL BLANKET
- IP — INLET PROTECTION
- PS — PERMANENT SEEDING

COMMONWEALTH ENGINEERS, INC.
A wealth of resources to master a common goal.
https://commonwealthengineers.com/

BRIAN KREED WILSON
REGISTERED
No. PE11900866
STATE OF INDIANA
PROFESSIONAL ENGINEER
Signature 8/15/2025 Date

CITY OF KOKOMO, INDIANA
HOWARD COUNTY

NORTH SIDE INTERCEPTOR
IMPROVEMENTS PROJECT

© 2025 BY COMMONWEALTH ENGINEERS, INC. ALL RIGHTS RESERVED. REPRODUCTION BY ANY METHOD IN WHOLE OR IN PART WITHOUT PERMISSION IS PROHIBITED

Indiana 811 Know what's below. Call before you dig.
Know what's below. 811 before you dig.
1-800-382-5544
(ITS THE LAW)

No.	Submittal / Revision	By	Date

Designed By:	Drawn By:	Checked By:
BW	BW/CH/EK	JH
Issue Date: 8/2025	Project No: S21082	Scale: AS SHOWN

EROSION CONTROL PLAN

Drawing No: EC3
Sheet: 101 OF 137

File: Z:\SHARED\N CLIENTS A-L\KOKOMO\S21082 NORTH SIDE INTERCEPTOR DESIGN\06 CAD\A CURRENT FILES\ DRAWINGS\09 - S21082 - EROSION CONTROL.DWG
Saved: 8/13/2025 10:24:09 AM Plotted: 8/13/2025 10:26:47 AM Current User: Brian Waterman LastSavedBy: bwaterman

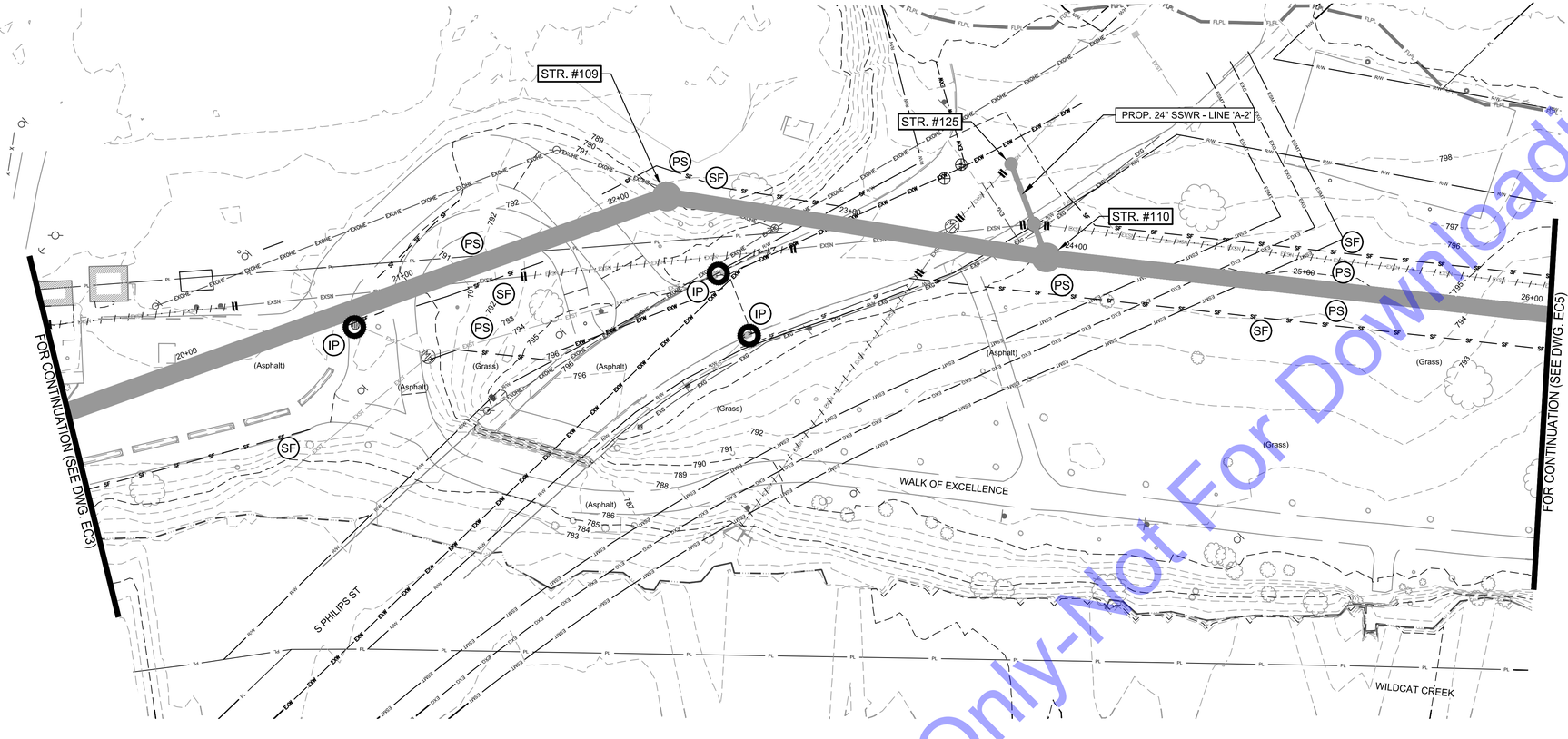

EROSION CONTROL PLAN

SCALE: 1"=30'-0"

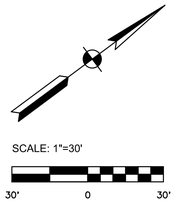

GENERAL NOTES

1. CONTRACTOR SHALL PROVIDE ADDITIONAL EROSION CONTROL MEASURES, AS SPECIFIED IN THE DETAILED SPECIFICATIONS. THESE SHALL INCLUDE, BUT NOT BE LIMITED TO, CONCRETE WASHING STATIONS, TEMPORARY CONSTRUCTION ENTRANCES, TEMPORARY SEEDING, ETC. AS REQUIRED DURING THE DURATION OF THE PROJECT TO MAINTAIN COMPLIANCE WITH THE IDEM CONSTRUCTION STORM WATER GENERAL PERMIT AND STORM WATER POLLUTION PREVENTION PLAN. CONTRACTOR SHALL ADHERE TO ALL REQUIREMENTS OF SAID IDEM CONSTRUCTION STORM WATER GENERAL PERMIT, INCLUDING PROVIDING REQUIRED NOTIFICATIONS TO REQUIRED AGENCIES.
2. SEE DWG. EC13 FOR EROSION CONTROL DETAILS.
3. CONTRACTOR SHALL APPLY TEMPORARY AND PERMANENT SEEDING IN THE SEQUENCE SPECIFIED IN THE DETAILED SPECIFICATIONS.
4. CONTRACTOR SHALL PROTECT ALL AREAS WITH SLOPES EXCEEDING 4:1 WITH EROSION CONTROL BLANKETS INSTALLED AND STAPLED IN ACCORDANCE WITH MANUFACTURER'S REQUIREMENTS. INSTALL EROSION CONTROL BLANKETS IMMEDIATELY FOLLOWING COMPLETION OF WORK, AFTER TEMPORARY OR PERMANENT SEEDING HAS BEEN COMPLETED.
5. FOR NEW STORM INLETS, CONTRACTOR SHALL INSTALL INLET PROTECTION IMMEDIATELY FOLLOWING INSTALLATION OF INLET AND BACKFILLING.

EROSION CONTROL LEGEND

- SF — SILT FENCE
- EB — EROSION CONTROL BLANKET
- IP — INLET PROTECTION
- PS — PERMANENT SEEDING

For Public Viewing Only-Not For Downloading

COMMONWEALTH ENGINEERS, INC.
A wealth of resources to master a common goal.
https://commonwealthengineers.com/

BRIAN KREED WILSON
REGISTERED
No. PE11900866
STATE OF INDIANA
PROFESSIONAL ENGINEER
Brian Wilson
Signature
8/15/2025
Date

CITY OF KOKOMO, INDIANA
HOWARD COUNTY

NORTH SIDE INTERCEPTOR
IMPROVEMENTS PROJECT

© 2025 BY COMMONWEALTH ENGINEERS, INC. ALL RIGHTS RESERVED. REPRODUCTION BY ANY METHOD IN WHOLE OR IN PART WITHOUT PERMISSION IS PROHIBITED

Know what's below. Call before you dig. 811 or 1-800-382-5544 (ITS THE LAW)

No.	Submittal / Revision	By	Date

Designed By:	Drawn By:	Checked By:
BW	BW/CH/EK	JH
Issue Date: 8/2025	Project No: S21082	Scale: AS SHOWN

EROSION CONTROL PLAN

Drawing No:
EC4
Sheet: 102 OF 137

File: Z:\SHARED\IN CLIENTS A-L\KOKOMO\S21082 NORTH SIDE INTERCEPTOR DESIGN\06 CAD\A CURRENT FILES\1 DRAWINGS\09 - S21082 - EROSION CONTROL.DWG
Saved: 8/13/2025 10:24:09 AM Plotted: 8/13/2025 10:27:10 AM Current User: Brian Waterman LastSavedBy: bwaterman

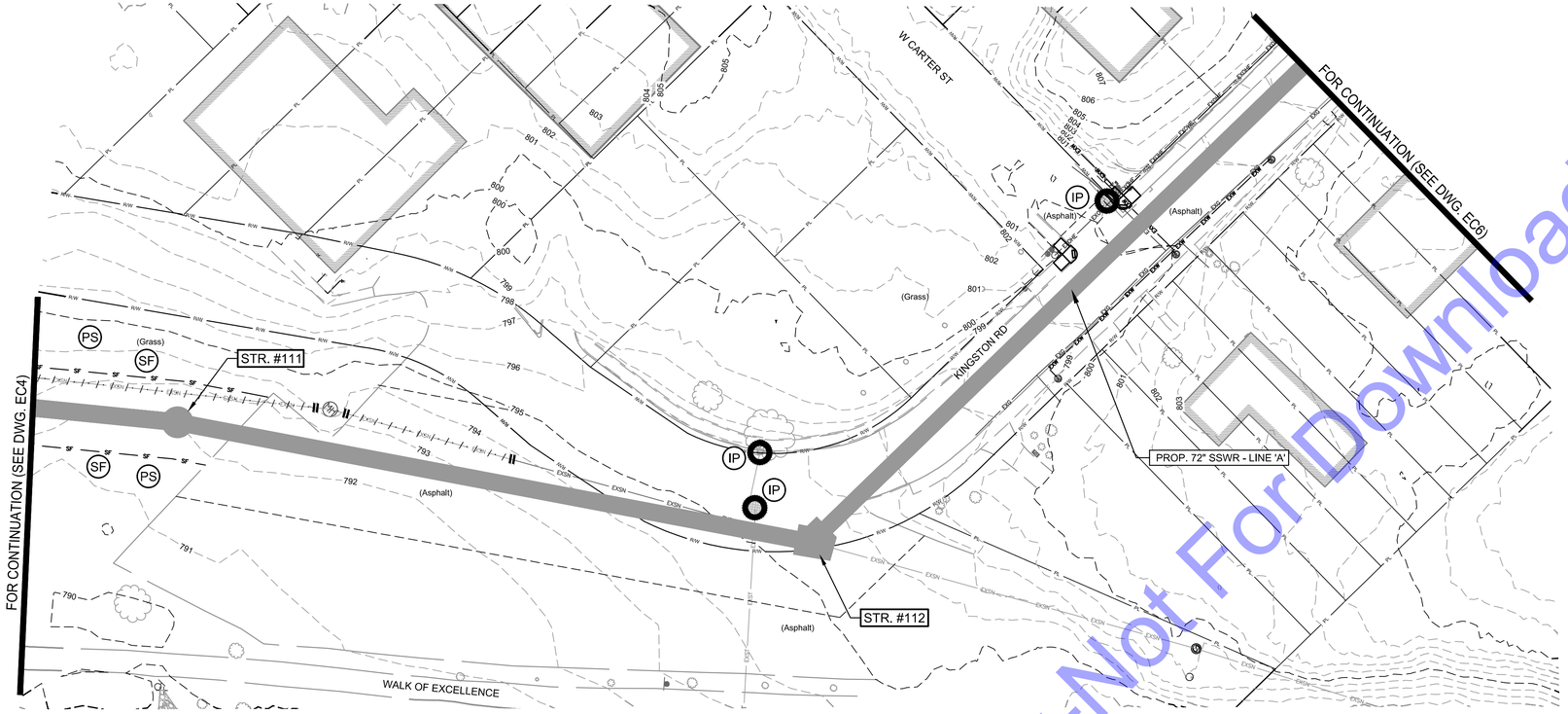

EROSION CONTROL PLAN
SCALE: 1"=30'-0"

For Public Viewing Only-Not For Downloading

GENERAL NOTES

1. CONTRACTOR SHALL PROVIDE ADDITIONAL EROSION CONTROL MEASURES, AS SPECIFIED IN THE DETAILED SPECIFICATIONS. THESE SHALL INCLUDE, BUT NOT BE LIMITED TO, CONCRETE WASHING STATIONS, TEMPORARY CONSTRUCTION ENTRANCES, TEMPORARY SEEDING, ETC. AS REQUIRED DURING THE DURATION OF THE PROJECT TO MAINTAIN COMPLIANCE WITH THE IDEM CONSTRUCTION STORM WATER GENERAL PERMIT AND STORM WATER POLLUTION PREVENTION PLAN. CONTRACTOR SHALL ADHERE TO ALL REQUIREMENTS OF SAID IDEM CONSTRUCTION STORM WATER GENERAL PERMIT, INCLUDING PROVIDING REQUIRED NOTIFICATIONS TO REQUIRED AGENCIES.
2. SEE DWG. EC13 FOR EROSION CONTROL DETAILS.
3. CONTRACTOR SHALL APPLY TEMPORARY AND PERMANENT SEEDING IN THE SEQUENCE SPECIFIED IN THE DETAILED SPECIFICATIONS.
4. CONTRACTOR SHALL PROTECT ALL AREAS WITH SLOPES EXCEEDING 4:1 WITH EROSION CONTROL BLANKETS INSTALLED AND STAPLED IN ACCORDANCE WITH MANUFACTURER'S REQUIREMENTS. INSTALL EROSION CONTROL BLANKETS IMMEDIATELY FOLLOWING COMPLETION OF WORK, AFTER TEMPORARY OR PERMANENT SEEDING HAS BEEN COMPLETED.
5. FOR NEW STORM INLETS, CONTRACTOR SHALL INSTALL INLET PROTECTION IMMEDIATELY FOLLOWING INSTALLATION OF INLET AND BACKFILLING.

EROSION CONTROL LEGEND

SF	SILT FENCE
EB	EROSION CONTROL BLANKET
IP	INLET PROTECTION
PS	PERMANENT SEEDING

COMMONWEALTH ENGINEERS, INC.
A wealth of resources to master a common goal.
https://commonwealthengineers.com/

BRIAN KREED WILSON
REGISTERED
No. PE11900866
STATE OF INDIANA
PROFESSIONAL ENGINEER

Brian Wilson 8/15/2025
Signature Date

No.	Submittal Revision	By	Date

Designed By:	Drawn By:	Checked By:
BW	BW/CH/EK	JH
Issue Date:	Project No:	Scale:
8/2025	S21082	AS SHOWN

CITY OF KOKOMO, INDIANA
HOWARD COUNTY

NORTH SIDE INTERCEPTOR
IMPROVEMENTS PROJECT

© 2025 BY COMMONWEALTH ENGINEERS, INC. ALL RIGHTS RESERVED. REPRODUCTION BY ANY METHOD IN WHOLE OR IN PART WITHOUT PERMISSION IS PROHIBITED

Know what's below. Call before you dig.
1-800-382-5544 (ITS THE LAW)

EROSION CONTROL PLAN

Drawing No:
EC5

Sheet: 103 OF 137

File: Z:\SHARED\IN CLIENTS A-L\KOKOMO\S21082 NORTH SIDE INTERCEPTOR DESIGN\06 CAD\A CURRENT FILES\1 DRAWINGS\09 - S21082 - EROSION CONTROL.DWG
Saved: 8/13/2025 10:24:09 AM Plotted: 8/13/2025 10:27:35 AM Current User: Brian Waterman LastSavedBy: bwaterman

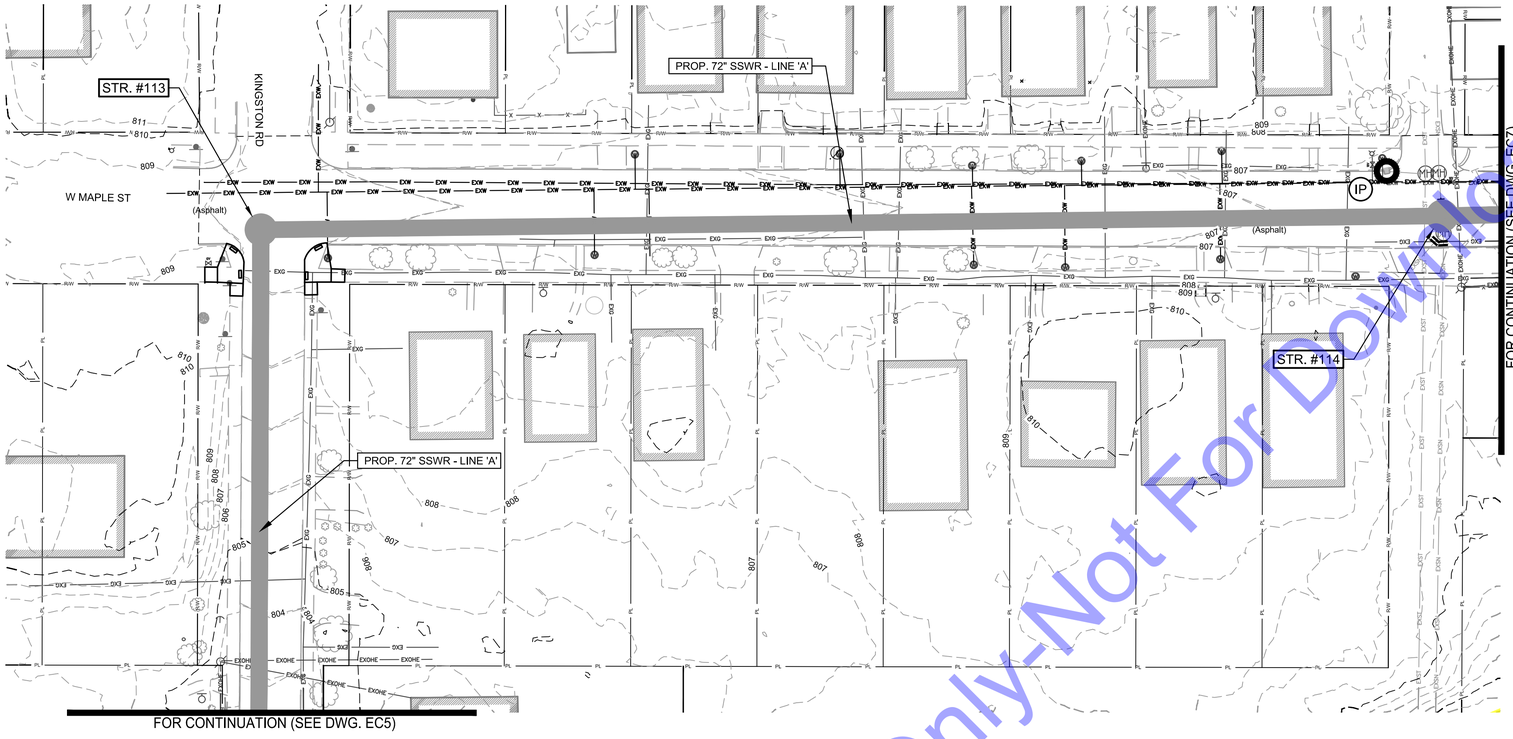

EROSION CONTROL PLAN
SCALE: 1"=30'-0"

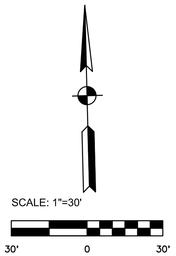

GENERAL NOTES

1. CONTRACTOR SHALL PROVIDE ADDITIONAL EROSION CONTROL MEASURES, AS SPECIFIED IN THE DETAILED SPECIFICATIONS. THESE SHALL INCLUDE, BUT NOT BE LIMITED TO, CONCRETE WASHING STATIONS, TEMPORARY CONSTRUCTION ENTRANCES, TEMPORARY SEEDING, ETC. AS REQUIRED DURING THE DURATION OF THE PROJECT TO MAINTAIN COMPLIANCE WITH THE IDEM CONSTRUCTION STORM WATER GENERAL PERMIT AND STORM WATER POLLUTION PREVENTION PLAN. CONTRACTOR SHALL ADHERE TO ALL REQUIREMENTS OF SAID IDEM CONSTRUCTION STORM WATER GENERAL PERMIT, INCLUDING PROVIDING REQUIRED NOTIFICATIONS TO REQUIRED AGENCIES.
2. SEE DWG. EC13 FOR EROSION CONTROL DETAILS.
3. CONTRACTOR SHALL APPLY TEMPORARY AND PERMANENT SEEDING IN THE SEQUENCE SPECIFIED IN THE DETAILED SPECIFICATIONS.
4. CONTRACTOR SHALL PROTECT ALL AREAS WITH SLOPES EXCEEDING 4:1 WITH EROSION CONTROL BLANKETS INSTALLED AND STAPLED IN ACCORDANCE WITH MANUFACTURER'S REQUIREMENTS. INSTALL EROSION CONTROL BLANKETS IMMEDIATELY FOLLOWING COMPLETION OF WORK, AFTER TEMPORARY OR PERMANENT SEEDING HAS BEEN COMPLETED.
5. FOR NEW STORM INLETS, CONTRACTOR SHALL INSTALL INLET PROTECTION IMMEDIATELY FOLLOWING INSTALLATION OF INLET AND BACKFILLING.

EROSION CONTROL LEGEND

- (SF) SILT FENCE
- (EB) EROSION CONTROL BLANKET
- (IP) INLET PROTECTION
- (PS) PERMANENT SEEDING

For Public Viewing Only-Not For Downloading

COMMONWEALTH ENGINEERS, INC.
A wealth of resources to master a common goal.
https://commonwealthengineers.com/

BRIAN KREED WILSON
REGISTERED
No. PE11900866
STATE OF INDIANA
PROFESSIONAL ENGINEER
Brian Wilson
Signature
8/15/2025
Date

CITY OF KOKOMO, INDIANA
HOWARD COUNTY

NORTH SIDE INTERCEPTOR
IMPROVEMENTS PROJECT

© 2025 BY COMMONWEALTH ENGINEERS, INC. ALL RIGHTS RESERVED. REPRODUCTION BY ANY METHOD IN WHOLE OR IN PART WITHOUT PERMISSION IS PROHIBITED

Indiana 811
Know what's below. Call before you dig.
Know what's below. 811 before you dig.
1-800-382-5544
(ITS THE LAW)

No.	Submittal / Revision	By	Date

Designed By:	Drawn By:	Checked By:
BW	BW/CH/EK	JH
Issue Date:	Project No:	Scale:
8/2025	S21082	AS SHOWN

EROSION CONTROL PLAN

Drawing No:
EC6
Sheet: 104 OF 137

File: Z:\SHARED\IN CLIENTS A-L\KOKOMO\S21082 NORTH SIDE INTERCEPTOR DESIGN\06 CAD\A CURRENT FILES\1 DRAWINGS\09 - S21082 - EROSION CONTROL.DWG
Saved: 8/13/2025 10:24:09 AM Plotted: 8/13/2025 10:27:57 AM Current User: Brian Waterman LastSavedBy: bwaterman

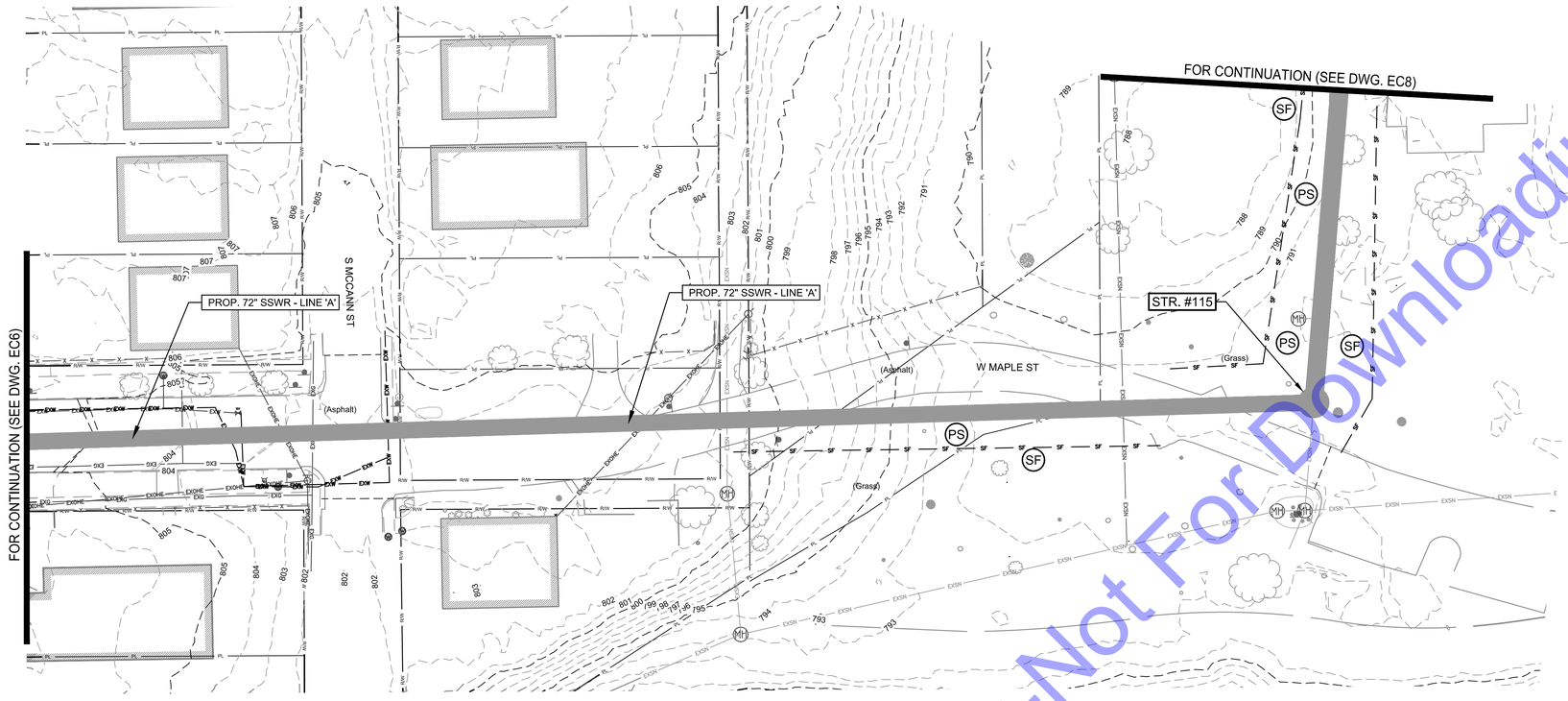

EROSION CONTROL PLAN

SCALE: 1"=30'-0"

SCALE: 1"=30'

30' 0 30'

GENERAL NOTES

1. CONTRACTOR SHALL PROVIDE ADDITIONAL EROSION CONTROL MEASURES, AS SPECIFIED IN THE DETAILED SPECIFICATIONS. THESE SHALL INCLUDE, BUT NOT BE LIMITED TO, CONCRETE WASHING STATIONS, TEMPORARY CONSTRUCTION ENTRANCES, TEMPORARY SEEDING, ETC. AS REQUIRED DURING THE DURATION OF THE PROJECT TO MAINTAIN COMPLIANCE WITH THE IDEM CONSTRUCTION STORM WATER GENERAL PERMIT AND STORM WATER POLLUTION PREVENTION PLAN. CONTRACTOR SHALL ADHERE TO ALL REQUIREMENTS OF SAID IDEM CONSTRUCTION STORM WATER GENERAL PERMIT, INCLUDING PROVIDING REQUIRED NOTIFICATIONS TO REQUIRED AGENCIES.
2. SEE DWG. EC13 FOR EROSION CONTROL DETAILS.
3. CONTRACTOR SHALL APPLY TEMPORARY AND PERMANENT SEEDING IN THE SEQUENCE SPECIFIED IN THE DETAILED SPECIFICATIONS.
4. CONTRACTOR SHALL PROTECT ALL AREAS WITH SLOPES EXCEEDING 4:1 WITH EROSION CONTROL BLANKETS INSTALLED AND STAPLED IN ACCORDANCE WITH MANUFACTURER'S REQUIREMENTS. INSTALL EROSION CONTROL BLANKETS IMMEDIATELY FOLLOWING COMPLETION OF WORK, AFTER TEMPORARY OR PERMANENT SEEDING HAS BEEN COMPLETED.
5. FOR NEW STORM INLETS, CONTRACTOR SHALL INSTALL INLET PROTECTION IMMEDIATELY FOLLOWING INSTALLATION OF INLET AND BACKFILLING.

EROSION CONTROL LEGEND

- SF — SILT FENCE
- EB — EROSION CONTROL BLANKET
- IP — INLET PROTECTION
- PS — PERMANENT SEEDING

For Public Viewing Only-Not For Downloading

COMMONWEALTH ENGINEERS, INC.
A wealth of resources to master a common goal.
https://commonwealthengineers.com/

BRIAN KREED WILSON
REGISTERED
No. PE11900866
STATE OF INDIANA
PROFESSIONAL ENGINEER

Brian Wilson
Signature

8/15/2025
Date

CITY OF KOKOMO, INDIANA
HOWARD COUNTY

NORTH SIDE INTERCEPTOR
IMPROVEMENTS PROJECT

© 2025 BY COMMONWEALTH ENGINEERS, INC. ALL RIGHTS RESERVED. REPRODUCTION BY ANY METHOD IN WHOLE OR IN PART WITHOUT PERMISSION IS PROHIBITED

Know what's below. Call before you dig.
1-800-382-5544 (ITS THE LAW)

No.	Submittal Revision	By	Date

Designed By:	Drawn By:	Checked By:
BW	BW/CH/EK	JH
Issue Date:	**Project No:**	**Scale:**
8/2025	S21082	AS SHOWN

EROSION CONTROL PLAN

Drawing No:
EC7
Sheet: 105 OF 137

File: Z:\SHARED\IN CLIENTS A-L\KOKOMO\S21082 NORTH SIDE INTERCEPTOR DESIGN\06 CAD\A CURRENT FILES\1 DRAWINGS\09 - S21082 - EROSION CONTROL.DWG
Saved: 8/13/2025 10:24:09 AM Plotted: 8/13/2025 10:28:20 AM Current User: Brian Waterman LastSavedBy: bwaterman

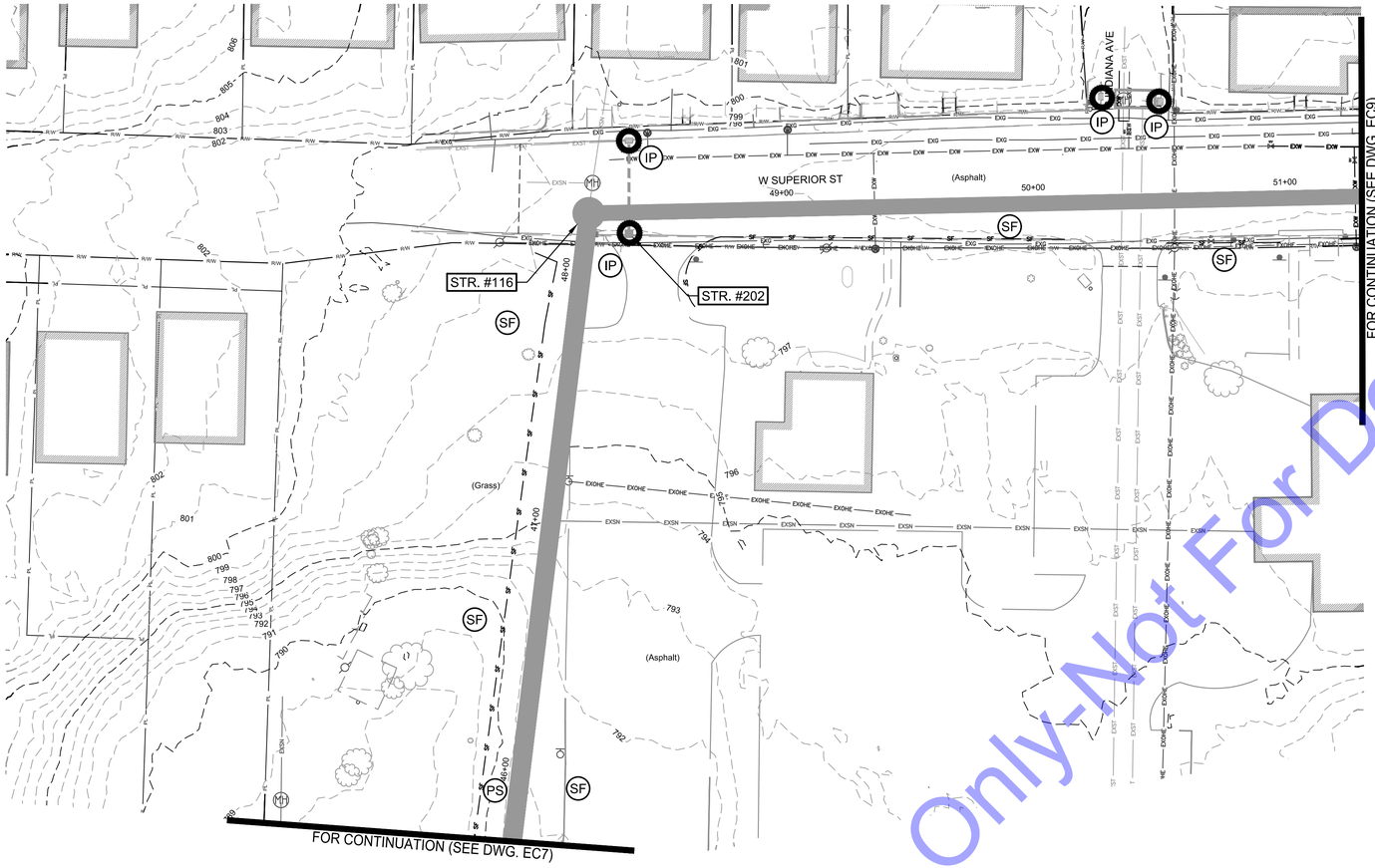

EROSION CONTROL PLAN
SCALE: 1"=30'-0"

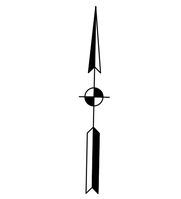

GENERAL NOTES

1. CONTRACTOR SHALL PROVIDE ADDITIONAL EROSION CONTROL MEASURES, AS SPECIFIED IN THE DETAILED SPECIFICATIONS. THESE SHALL INCLUDE, BUT NOT BE LIMITED TO, CONCRETE WASHING STATIONS, TEMPORARY CONSTRUCTION ENTRANCES, TEMPORARY SEEDING, ETC. AS REQUIRED DURING THE DURATION OF THE PROJECT TO MAINTAIN COMPLIANCE WITH THE IDEM CONSTRUCTION STORM WATER GENERAL PERMIT AND STORM WATER POLLUTION PREVENTION PLAN. CONTRACTOR SHALL ADHERE TO ALL REQUIREMENTS OF SAID IDEM CONSTRUCTION STORM WATER GENERAL PERMIT, INCLUDING PROVIDING REQUIRED NOTIFICATIONS TO REQUIRED AGENCIES.
2. SEE DWG. EC13 FOR EROSION CONTROL DETAILS.
3. CONTRACTOR SHALL APPLY TEMPORARY AND PERMANENT SEEDING IN THE SEQUENCE SPECIFIED IN THE DETAILED SPECIFICATIONS.
4. CONTRACTOR SHALL PROTECT ALL AREAS WITH SLOPES EXCEEDING 4:1 WITH EROSION CONTROL BLANKETS INSTALLED AND STAPLED IN ACCORDANCE WITH MANUFACTURER'S REQUIREMENTS. INSTALL EROSION CONTROL BLANKETS IMMEDIATELY FOLLOWING COMPLETION OF WORK, AFTER TEMPORARY OR PERMANENT SEEDING HAS BEEN COMPLETED.
5. FOR NEW STORM INLETS, CONTRACTOR SHALL INSTALL INLET PROTECTION IMMEDIATELY FOLLOWING INSTALLATION OF INLET AND BACKFILLING.

EROSION CONTROL LEGEND

- SF — SILT FENCE
- EB — EROSION CONTROL BLANKET
- IP — INLET PROTECTION
- PS — PERMANENT SEEDING

For Public Viewing Only-Not For Downloading

COMMONWEALTH ENGINEERS, INC.
A wealth of resources to master a common goal.
https://commonwealthengineers.com/

BRIAN KREED WILSON
REGISTERED
No. PE11900866
STATE OF INDIANA
PROFESSIONAL ENGINEER
Brian Wilson
Signature
8/15/2025
Date

CITY OF KOKOMO, INDIANA
HOWARD COUNTY

NORTH SIDE INTERCEPTOR IMPROVEMENTS PROJECT

© 2025 BY COMMONWEALTH ENGINEERS, INC. ALL RIGHTS RESERVED. REPRODUCTION BY ANY METHOD IN WHOLE OR IN PART WITHOUT PERMISSION IS PROHIBITED

Indiana 811
Know what's below. Call before you dig.
Know what's below. 811 before you dig.
1-800-382-5544
(ITS THE LAW)

No.	Submittal / Revision	By	Date

Designed By:	Drawn By:	Checked By:
BW	BW/CH/EK	JH
Issue Date:	Project No:	Scale:
8/2025	S21082	AS SHOWN

EROSION CONTROL PLAN

Drawing No:
EC8
Sheet: 106 OF 137

File: Z:\SHARED\IN CLIENTS A-L\KOKOMO\S21082 NORTH SIDE INTERCEPTOR DESIGN\06 CAD\A CURRENT FILES\1 DRAWINGS\09 - S21082 - EROSION CONTROL.DWG
Saved: 8/13/2025 10:24:09 AM Plotted: 8/13/2025 10:28:44 AM Current User: Brian Waterman LastSavedBy: bwaterman

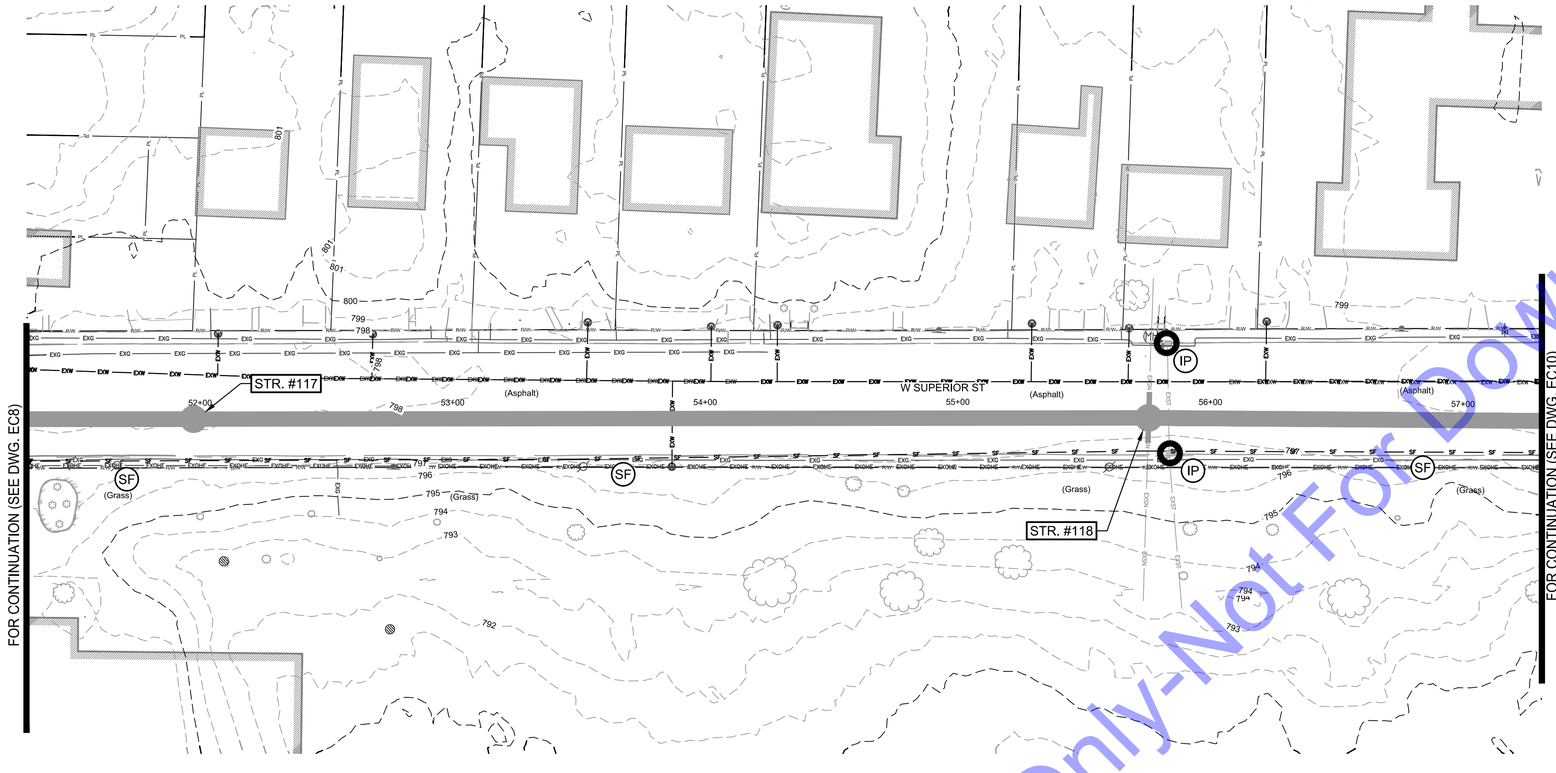

EROSION CONTROL PLAN
SCALE: 1"=30'-0"

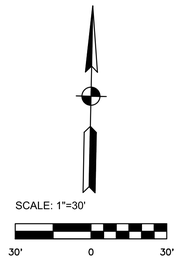

GENERAL NOTES

1. CONTRACTOR SHALL PROVIDE ADDITIONAL EROSION CONTROL MEASURES, AS SPECIFIED IN THE DETAILED SPECIFICATIONS. THESE SHALL INCLUDE, BUT NOT BE LIMITED TO, CONCRETE WASHING STATIONS, TEMPORARY CONSTRUCTION ENTRANCES, TEMPORARY SEEDING, ETC. AS REQUIRED DURING THE DURATION OF THE PROJECT TO MAINTAIN COMPLIANCE WITH THE IDEM CONSTRUCTION STORM WATER GENERAL PERMIT AND STORM WATER POLLUTION PREVENTION PLAN. CONTRACTOR SHALL ADHERE TO ALL REQUIREMENTS OF SAID IDEM CONSTRUCTION STORM WATER GENERAL PERMIT, INCLUDING PROVIDING REQUIRED NOTIFICATIONS TO REQUIRED AGENCIES.
2. SEE DWG. EC13 FOR EROSION CONTROL DETAILS.
3. CONTRACTOR SHALL APPLY TEMPORARY AND PERMANENT SEEDING IN THE SEQUENCE SPECIFIED IN THE DETAILED SPECIFICATIONS.
4. CONTRACTOR SHALL PROTECT ALL AREAS WITH SLOPES EXCEEDING 4:1 WITH EROSION CONTROL BLANKETS INSTALLED AND STAPLED IN ACCORDANCE WITH MANUFACTURER'S REQUIREMENTS. INSTALL EROSION CONTROL BLANKETS IMMEDIATELY FOLLOWING COMPLETION OF WORK, AFTER TEMPORARY OR PERMANENT SEEDING HAS BEEN COMPLETED.
5. FOR NEW STORM INLETS, CONTRACTOR SHALL INSTALL INLET PROTECTION IMMEDIATELY FOLLOWING INSTALLATION OF INLET AND BACKFILLING.

EROSION CONTROL LEGEND

- SF — SILT FENCE
- EB — EROSION CONTROL BLANKET
- IP — INLET PROTECTION
- PS — PERMANENT SEEDING

For Public Viewing Only-Not For Downloading

COMMONWEALTH ENGINEERS, INC.
A wealth of resources to master a common goal.
https://commonwealthengineers.com/

BRIAN KREED WILSON
REGISTERED
No. PE11900866
STATE OF
INDIANA
PROFESSIONAL ENGINEER
Brian Wilson
Signature
8/15/2025
Date

CITY OF KOKOMO, INDIANA
HOWARD COUNTY

NORTH SIDE INTERCEPTOR
IMPROVEMENTS PROJECT

© 2025 BY COMMONWEALTH ENGINEERS, INC. ALL RIGHTS RESERVED. REPRODUCTION BY ANY METHOD IN WHOLE OR IN PART WITHOUT PERMISSION IS PROHIBITED

Indiana 811
Know what's below. Call before you dig.
Know what's below. 811 before you dig.
1-800-382-5544
(ITS THE LAW)

No.	Submittal / Revision	By	Date

Designed By:	Drawn By:	Checked By:
BW	BW/CH/EK	JH
Issue Date:	Project No:	Scale:
8/2025	S21082	AS SHOWN

EROSION CONTROL PLAN

Drawing No:
EC9
Sheet: 107 OF 137

File: Z:\SHARED\IN CLIENTS A-L\KOKOMO\S21082 NORTH SIDE INTERCEPTOR DESIGN\06 CAD\A CURRENT FILES\1 DRAWINGS\09 - S21082 - EROSION CONTROL.DWG
Saved: 8/13/2025 10:24:09 AM Plotted: 8/13/2025 10:29:11 AM Current User: Brian Waterman LastSavedBy: bwaterman

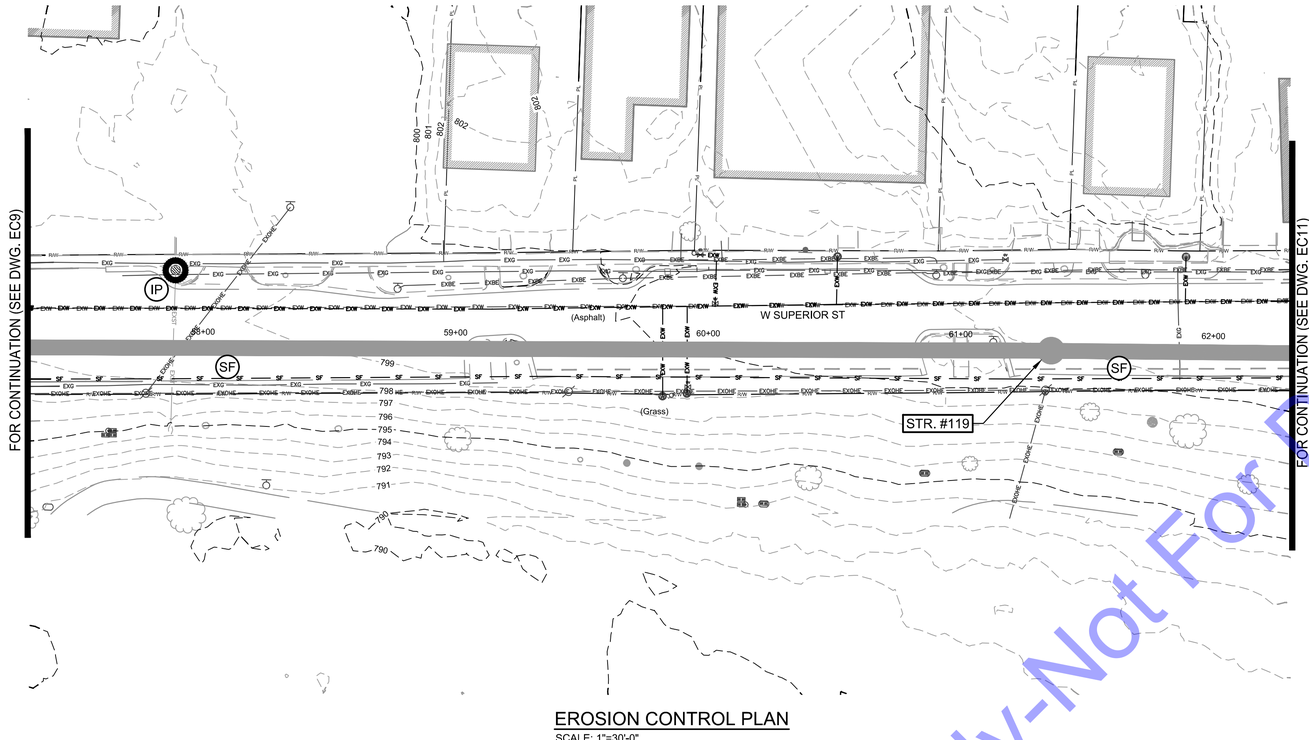

EROSION CONTROL PLAN
SCALE: 1"=30'-0"

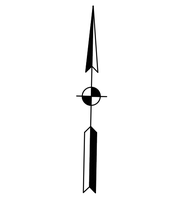

SCALE: 1"=30'
30' 0 30'

GENERAL NOTES

1. CONTRACTOR SHALL PROVIDE ADDITIONAL EROSION CONTROL MEASURES, AS SPECIFIED IN THE DETAILED SPECIFICATIONS. THESE SHALL INCLUDE, BUT NOT BE LIMITED TO, CONCRETE WASHING STATIONS, TEMPORARY CONSTRUCTION ENTRANCES, TEMPORARY SEEDING, ETC. AS REQUIRED DURING THE DURATION OF THE PROJECT TO MAINTAIN COMPLIANCE WITH THE IDEM CONSTRUCTION STORM WATER GENERAL PERMIT AND STORM WATER POLLUTION PREVENTION PLAN. CONTRACTOR SHALL ADHERE TO ALL REQUIREMENTS OF SAID IDEM CONSTRUCTION STORM WATER GENERAL PERMIT, INCLUDING PROVIDING REQUIRED NOTIFICATIONS TO REQUIRED AGENCIES.
2. SEE DWG. EC13 FOR EROSION CONTROL DETAILS.
3. CONTRACTOR SHALL APPLY TEMPORARY AND PERMANENT SEEDING IN THE SEQUENCE SPECIFIED IN THE DETAILED SPECIFICATIONS.
4. CONTRACTOR SHALL PROTECT ALL AREAS WITH SLOPES EXCEEDING 4:1 WITH EROSION CONTROL BLANKETS INSTALLED AND STAPLED IN ACCORDANCE WITH MANUFACTURER'S REQUIREMENTS. INSTALL EROSION CONTROL BLANKETS IMMEDIATELY FOLLOWING COMPLETION OF WORK, AFTER TEMPORARY OR PERMANENT SEEDING HAS BEEN COMPLETED.
5. FOR NEW STORM INLETS, CONTRACTOR SHALL INSTALL INLET PROTECTION IMMEDIATELY FOLLOWING INSTALLATION OF INLET AND BACKFILLING.

EROSION CONTROL LEGEND

- (SF) SILT FENCE
- (EB) EROSION CONTROL BLANKET
- (IP) INLET PROTECTION
- (PS) PERMANENT SEEDING

For Public Viewing Only-Not For Downloading

COMMONWEALTH ENGINEERS, INC.
A wealth of resources to master a common goal.
https://commonwealthengineers.com/

BRIAN KREED WILSON
REGISTERED
No. PE11900866
STATE OF INDIANA
PROFESSIONAL ENGINEER
Brian Wilson 8/15/2025
Signature Date

CITY OF KOKOMO, INDIANA
HOWARD COUNTY

NORTH SIDE INTERCEPTOR IMPROVEMENTS PROJECT

© 2025 BY COMMONWEALTH ENGINEERS, INC. ALL RIGHTS RESERVED. REPRODUCTION BY ANY METHOD IN WHOLE OR IN PART WITHOUT PERMISSION IS PROHIBITED

Indiana 811 Know what's below. Call before you dig.
Know what's below. 811 before you dig.
1-800-382-5544 (ITS THE LAW)

No.	Submittal Revision	By	Date

Designed By:	Drawn By:	Checked By:
BW	BW/CH/EK	JH
Issue Date:	Project No:	Scale:
8/2025	S21082	AS SHOWN

EROSION CONTROL PLAN

Drawing No:
EC10
Sheet: 108 OF 137

File: Z:\SHARED\IN CLIENTS A-L\KOKOMO\S21082 NORTH SIDE INTERCEPTOR DESIGN\06 CAD\A CURRENT FILES\1 DRAWINGS\09 - S21082 - EROSION CONTROL.DWG
Saved: 8/13/2025 10:24:09 AM Plotted: 8/13/2025 10:29:34 AM Current User: Brian Waterman LastSavedBy: bwaterman

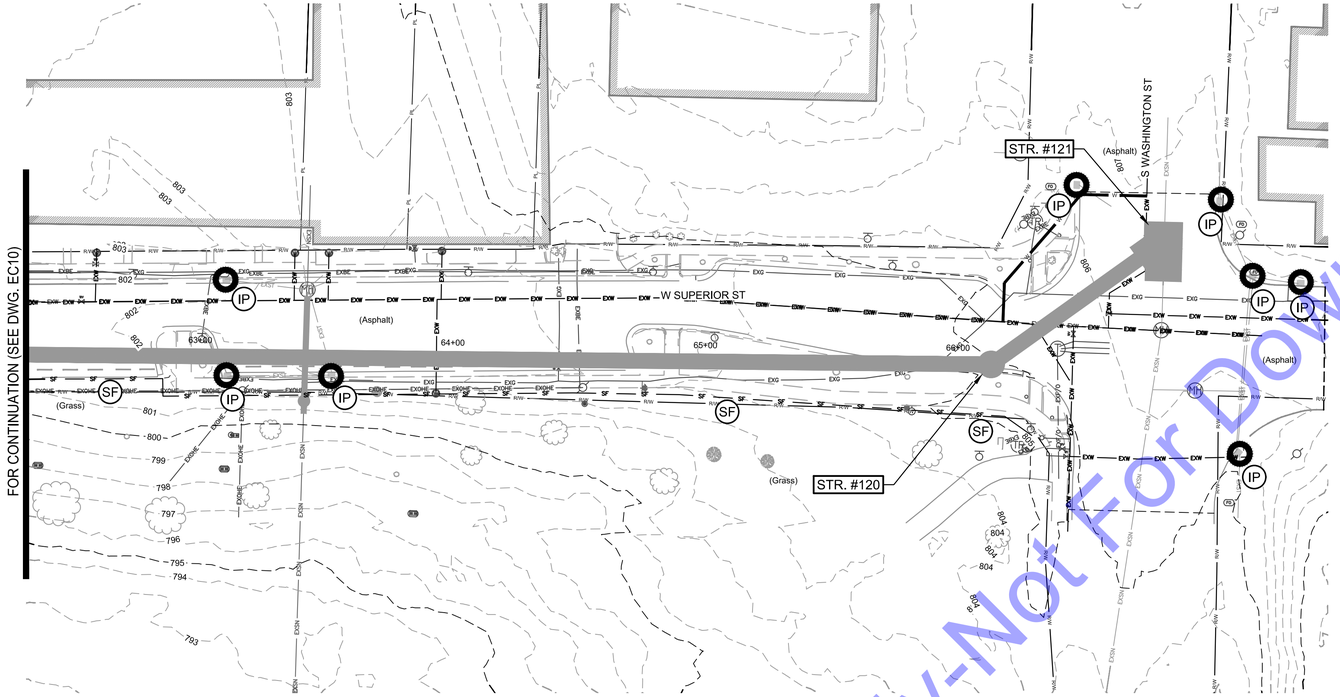

EROSION CONTROL PLAN
SCALE: 1"=30'-0"

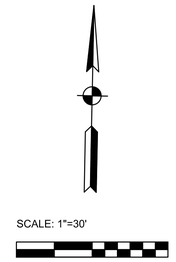

GENERAL NOTES

1. CONTRACTOR SHALL PROVIDE ADDITIONAL EROSION CONTROL MEASURES, AS SPECIFIED IN THE DETAILED SPECIFICATIONS. THESE SHALL INCLUDE, BUT NOT BE LIMITED TO, CONCRETE WASHING STATIONS, TEMPORARY CONSTRUCTION ENTRANCES, TEMPORARY SEEDING, ETC. AS REQUIRED DURING THE DURATION OF THE PROJECT TO MAINTAIN COMPLIANCE WITH THE IDEM CONSTRUCTION STORM WATER GENERAL PERMIT AND STORM WATER POLLUTION PREVENTION PLAN. CONTRACTOR SHALL ADHERE TO ALL REQUIREMENTS OF SAID IDEM CONSTRUCTION STORM WATER GENERAL PERMIT, INCLUDING PROVIDING REQUIRED NOTIFICATIONS TO REQUIRED AGENCIES.
2. SEE DWG. EC13 FOR EROSION CONTROL DETAILS.
3. CONTRACTOR SHALL APPLY TEMPORARY AND PERMANENT SEEDING IN THE SEQUENCE SPECIFIED IN THE DETAILED SPECIFICATIONS.
4. CONTRACTOR SHALL PROTECT ALL AREAS WITH SLOPES EXCEEDING 4:1 WITH EROSION CONTROL BLANKETS INSTALLED AND STAPLED IN ACCORDANCE WITH MANUFACTURER'S REQUIREMENTS. INSTALL EROSION CONTROL BLANKETS IMMEDIATELY FOLLOWING COMPLETION OF WORK, AFTER TEMPORARY OR PERMANENT SEEDING HAS BEEN COMPLETED.
5. FOR NEW STORM INLETS, CONTRACTOR SHALL INSTALL INLET PROTECTION IMMEDIATELY FOLLOWING INSTALLATION OF INLET AND BACKFILLING.

EROSION CONTROL LEGEND

- SF — SILT FENCE
- EB — EROSION CONTROL BLANKET
- IP — INLET PROTECTION
- PS — PERMANENT SEEDING

For Public Viewing Only-Not For Downloading

COMMONWEALTH ENGINEERS, INC.
A wealth of resources to master a common goal.
https://commonwealthengineers.com/

BRIAN KREED WILSON
REGISTERED
No. PE11900866
STATE OF INDIANA
PROFESSIONAL ENGINEER
Signature 8/15/2025 Date

CITY OF KOKOMO, INDIANA
HOWARD COUNTY

NORTH SIDE INTERCEPTOR
IMPROVEMENTS PROJECT

© 2025 BY COMMONWEALTH ENGINEERS, INC. ALL RIGHTS RESERVED. REPRODUCTION BY ANY METHOD IN WHOLE OR IN PART WITHOUT PERMISSION IS PROHIBITED

Indiana 811 Know what's below. Call before you dig.
Know what's below. 811 before you dig.
1-800-382-5544 (ITS THE LAW)

No.	Submittal / Revision	By	Date

Designed By:	Drawn By:	Checked By:
BW	BW/CH/EK	JH
Issue Date: 8/2025	Project No: S21082	Scale: AS SHOWN

EROSION CONTROL PLAN

Drawing No: EC11

Sheet: 109 OF 137

File: Z:\SHARED\IN CLIENTS A-L\KOKOMO\S21082 NORTH SIDE INTERCEPTOR DESIGN\06 CAD\A CURRENT FILES\1 DRAWINGS\09 - S21082 - EROSION CONTROL.DWG
Saved: 8/13/2025 10:24:09 AM Plotted: 8/13/2025 10:29:59 AM Current User: Brian Waterman LastSavedBy: bwaterman

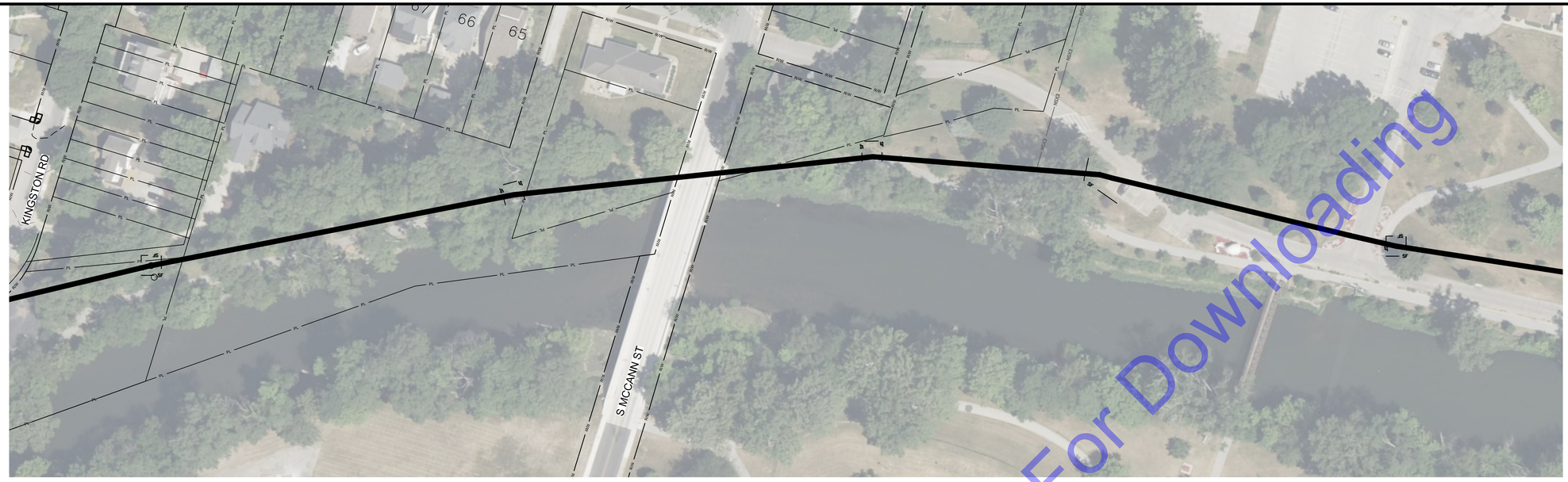

EROSION CONTROL PLAN
SCALE: 1"=60'-0"

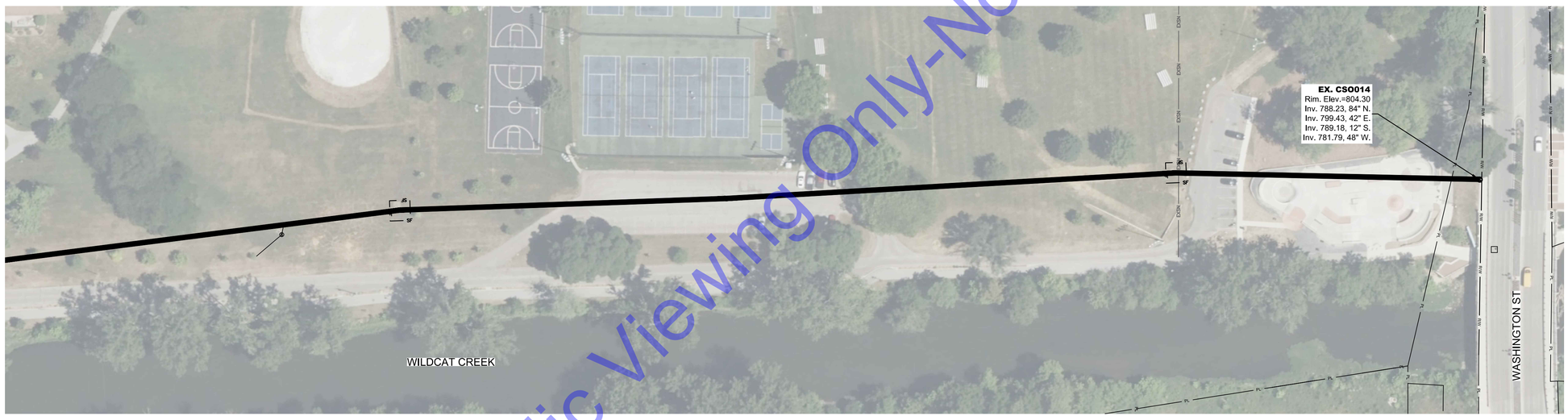

EROSION CONTROL PLAN
SCALE: 1"=60'-0"

GENERAL NOTES

1. IF CONTRACTOR SHALL PROVIDE ADDITIONAL EROSION CONTROL MEASURES, AS SPECIFIED IN THE DETAILED SPECIFICATIONS. THESE SHALL INCLUDE, BUT NOT BE LIMITED TO, CONCRETE WASHING STATIONS, TEMPORARY CONSTRUCTION ENTRANCES, TEMPORARY SEEDING, ETC. AS REQUIRED DURING THE DURATION OF THE PROJECT TO MAINTAIN COMPLIANCE WITH THE RULE 5 PERMIT AND STORM WATER POLLUTION PREVENTION PLAN. CONTRACTOR SHALL ADHERE TO ALL REQUIREMENTS OF SAID RULE 5 PERMIT, INCLUDING PROVIDING REQUIRED NOTIFICATIONS TO REQUIRED AGENCIES.
2. SEE DWG. EC13 FOR EROSION CONTROL DETAILS.
3. CONTRACTOR SHALL APPLY TEMPORARY AND PERMANENT SEEDING IN THE SEQUENCE SPECIFIED IN THE DETAILED SPECIFICATIONS.
4. CONTRACTOR SHALL PROTECT ALL AREAS WITH SLOPES EXCEEDING 4:1 WITH EROSION CONTROL BLANKETS INSTALLED AND STAPLED IN ACCORDANCE WITH MANUFACTURER'S REQUIREMENTS. INSTALL EROSION CONTROL BLANKETS IMMEDIATELY FOLLOWING COMPLETION OF WORK, AFTER TEMPORARY OR PERMANENT SEEDING HAS BEEN COMPLETED.
5. FOR NEW STORM INLETS, CONTRACTOR SHALL INSTALL INLET PROTECTION IMMEDIATELY FOLLOWING INSTALLATION OF INLET AND BACKFILLING.

EROSION CONTROL LEGEND

- (SF) SILT FENCE
- (EB) EROSION CONTROL BLANKET
- (IP) INLET PROTECTION
- (PS) PERMANENT SEEDING

SCALE: 1"=60'
60' 0 60'

SCALE: 1"=60'
60' 0 60'

For Public Viewing Only-Not For Downloading

COMMONWEALTH ENGINEERS, INC.
A wealth of resources to master a common goal.
https://commonwealthengineers.com/

BRIAN KREED WILSON
REGISTERED
No. PE11900866
STATE OF INDIANA
PROFESSIONAL ENGINEER
Brian Wilson
Signature
8/15/2025
Date

CITY OF KOKOMO, INDIANA
HOWARD COUNTY

NORTH SIDE INTERCEPTOR
IMPROVEMENTS PROJECT

© 2025 BY COMMONWEALTH ENGINEERS, INC. ALL RIGHTS RESERVED. REPRODUCTION BY ANY METHOD IN WHOLE OR IN PART WITHOUT PERMISSION IS PROHIBITED

Indiana 811 Know what's below. Call before you dig.
Know what's below. 811 before you dig.
1-800-382-5544
(ITS THE LAW)

No.	Submittal / Revision	By	Date

Designed By:	Drawn By:	Checked By:
BW	BW/CH/EK	JH
Issue Date:	Project No:	Scale:
8/2025	S21082	AS SHOWN

EROSION CONTROL PLAN

Drawing No:
EC12
Sheet: 110 OF 137

File: Z:\SHARED\IN CLIENTS A-L\KOKOMO\S21082 NORTH SIDE INTERCEPTOR DESIGN\06 CAD\A CURRENT FILES\1 DRAWINGS\05 - S21082 - PLAN AND PROFILE.DWG
Saved: 8/13/2025 10:35:44 AM Plotted: 8/13/2025 10:48:18 AM Current User: Brian Waterman LastSavedBy: bwaterman

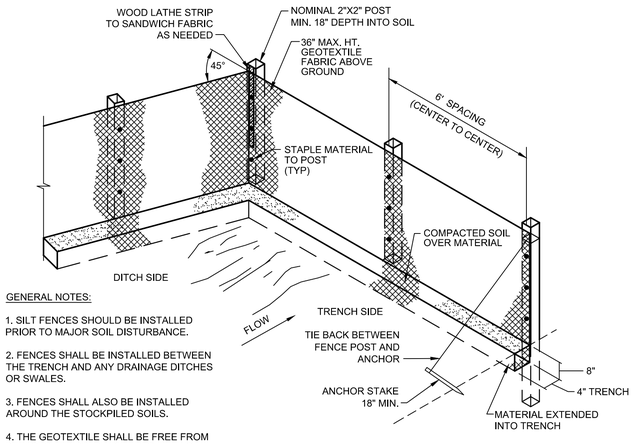

GENERAL NOTES:

1. SILT FENCES SHOULD BE INSTALLED PRIOR TO MAJOR SOIL DISTURBANCE.
2. FENCES SHALL BE INSTALLED BETWEEN THE TRENCH AND ANY DRAINAGE DITCHES OR SWALES.
3. FENCES SHALL ALSO BE INSTALLED AROUND THE STOCKPILED SOILS.
4. THE GEOTEXTILE SHALL BE FREE FROM DEFECTS, TEARS, PUNCTURES, FLAWS, DETERIORATION OR DAMAGE INCURRED DURING MANUFACTURE, TRANSPORTATION, STORAGE, OR INSTALLATION.
5. TIE BACKS SHALL BE PLACED AS REQUIRED.

SILT FENCE
NO SCALE

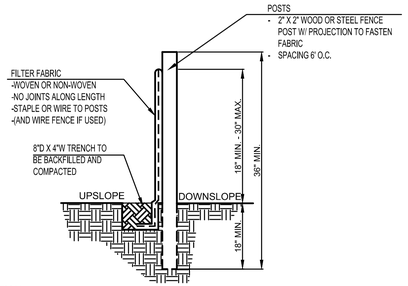

INSTALLATION:
1. THE BOTTOM 1' OF THE FENCE SHALL BE BURIED IN THE TRENCH ON THE UPSLOPE SIDE.
2. FENCE SHALL BE INSTALLED ALONG LEVEL GRADES, NOT ACROSS FLOW CHANNELS.
3. IF OPTIONAL SUPPORT WIRE FENCE IS USED, POST SPACING MAY BE EXTENDED TO 8' O.C.

MAINTENANCE:
1. INSPECT SILT FENCE PERIODICALLY (WEEKLY) AND AFTER EACH STORM EVENT.
2. IF FABRIC IS TORN OR DAMAGED OR IN ANY WAY BECOMES INEFFECTIVE, REPLACE THE AFFECTED PORTION IMMEDIATELY.
3. REMOVE DEPOSITED SEDIMENT WHEN IT REACHES HALF THE HEIGHT OF THE FENCE, OR IT IS CAUSING THE FABRIC TO BULGE.
4. TAKE CARE NOT TO UNDERMINE THE FENCE DURING SEDIMENT REMOVAL.
5. AFTER THE CONTRIBUTING AREA HAS BEEN STABILIZED, REMOVE THE FENCE AND REMAINING SEDIMENT, BRING THE DISTURBED AREA TO GRADE, AND STABILIZE.

SILT FENCE SECTION
NO SCALE

A. RESIDENTIAL/COMMERCIAL SEED MIXTURE

1. 35 PARTS KENTUCKY BLUEGRASS
2. 30 PARTS PERENNIAL RYE
3. 30 PARTS KENTUCKY FESCUE

B. MULCH

1. GOOD QUALITY DRY STORM
2. WOOD CELTULOSE OR CANE FIBER
3. MANUFACTURED EROSION CONTROL BRACKET NORTH AMERICA GREEN S-75 OR EQUAL

C. FERTILIZER AND LIME

1. AGRICULTURAL HYDRATED LIME
2. FERTILIZER 10-20-10

D. ROADSIDE BANK STABILIZATION MIXTURE (INDOT)

1. SEED MIXTURE CV WITH SUPPLEMENTAL
2. COLOR MIX PER INDOT SEED AND SODDING SPECIFICATION (LATEST EDITION)

NOTE: SEE DETAILED SPECIFICATION SECTION 12 - FINAL GRADING AND SEEDING FOR INSTALLATION REQUIREMENTS.

FINAL SEEDING AND GRADING

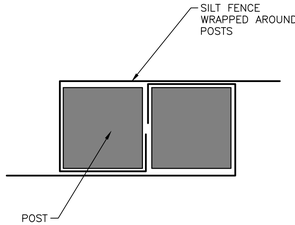

SILT FENCE - JOINT DETAIL
NO SCALE

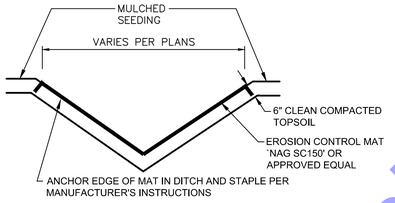

DITCH/SWALE RESTORATION DETAIL
N.T.S.

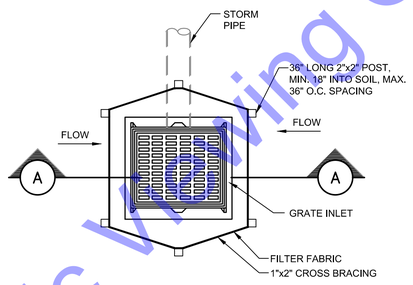

PLAN VIEW

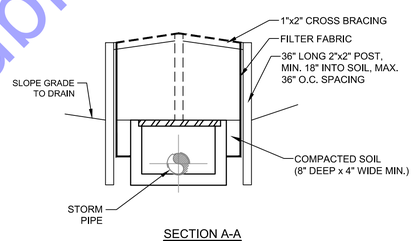

SECTION A-A

STORM INLET WITH SILT FENCE EROSION DETAIL

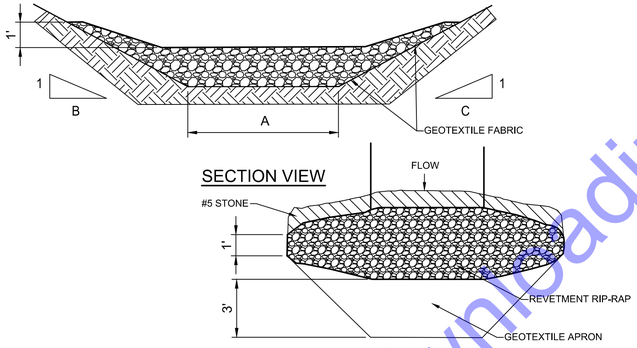

PLAN VIEW

GENERAL NOTES:

1. TO BE INSTALLED DOWNSTREAM OF ALL EXCAVATIONS ACROSS DITCHES.
2. AFTER COMPLETION OF CONTRACT, OR AS REQUESTED BY OWNER, THE CONTRACTOR SHALL REMOVE ALL TEMPORARY EROSION CONTROL ITEMS, REMOVE ALL ACCUMULATED DEPOSITS AND, AS REQUIRED, SEED AND MULCH OR SOD AS REQUIRED TO ESTABLISH AREA TO CONDITION PRIOR TO CONSTRUCTION.
3. CONTRACTOR SHALL BE RESPONSIBLE TO COMPLY WITH ALL ASPECTS OF "327 IAC 15-5" AND THE INDIANA STORM WATER QUALITY MANUAL.

TEMPORARY RIP-RAP CHECK DAM DETAIL
NO SCALE

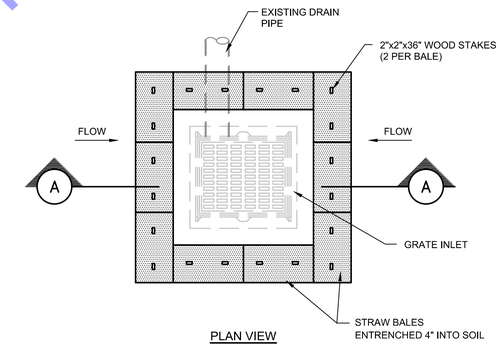

PLAN VIEW

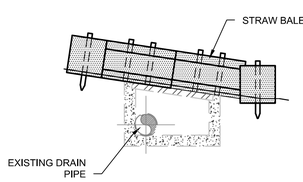

SECTION A-A

STORM INLET IN TURFED AREAS PROTECTION DETAILS
NO SCALE

MAINTENANCE:
1. INSPECT DAILY, AND AFTER EACH STORM EVENT OR HEAVY USE.
2. RESHAPE AS NEEDED FOR DRAINAGE AND RUNOFF CONTROL.
3. TOPDRESS WITH CLEAN STONE AS REQUIRED. MAINTAIN MINIMUM DEPTH THROUGHOUT CONSTRUCTION.
4. IMMEDIATELY REMOVE MUD AND SEDIMENT TRACKED OR WASHED ONTO PUBLIC ROADS BY SWEEPING OR BRUSHING. (DO NOT FLUSH AREA WITH WATER UNLESS WATER IS CONVEYED TO SEDIMENT TRAP.)
5. REPAIR ANY BROKEN PAVEMENT IMMEDIATELY.

PROJECT NOTIFICATION

A. CONTRACTOR SHALL PROVIDE CONSTRUCTION SIGN AND NOTICE AT A PUBLICLY ACCESSIBLE LOCATION NEAR THE PROJECT THAT DISPLAYS THE FOLLOWING INFORMATION:

1. A COPY OF THE NOI LETTER AND THE NPDES NUMBER.
2. LOCATION OF THE CONSTRUCTION PLANS.
3. NAME, COMPANY NAME, TELEPHONE NUMBER, EMAIL ADDRESS (IF APPLICABLE) AND ADDRESS OF THE PROJECT SITE OWNER.
4. NAME OF THE CONSTRUCTION PROJECT AND AN ADDRESS OR GENERAL LOCATION OF THE PROJECT.
5. NAME OF THE RECEIVING WATER(S).
6. CONTACT INFORMATION (PHONE AND EMAIL) OF CONTRACTOR WHERE QUESTIONS MAY BE DIRECTED.
7. DATE THE NOTICE WAS POSTED.
8. BE LEGIBLE AND ON AN 8 ½" X 11" SHEET AT A MINIMUM.
9. CONTRACTOR SHALL BE RESPONSIBLE FOR CONTACTING THE LOCAL SWCD, MS4 OR LOCAL JURISDICTION, PRIOR TO START OF CONSTRUCTION.

PROJECT DOCUMENTATION

B. CONTRACTOR SHALL MAINTAIN A PROJECT MANAGEMENT LOG THAT CONTAINS:

1. LOCATION OF EACH ACTIVITY RELATED TO ALL OFF-SITE BORROW SITES, DISPOSAL AREAS, AND STAGING AREAS THAT ARE OFF-SITE AND MEET CRITERIA NOTED IN CONSTRUCTION STORMWATER GENERAL PERMIT.
2. INFORMATION RELATED TO ALL PROJECT ACTIVITIES INCLUDING, BUT NOT LIMITED TO:
   a. SELF-MONITORING (SMP) REPORTS
   b. SMP REPORTS MUST BE COMPLETED BY A TRAINED INDIVIDUAL AS DESCRIBED IN THE CONSTRUCTION STORMWATER GENERAL PERMIT. CONTRACTOR SHALL RETAIN A COPY OF THE RESUME OF THE TRAINED INDIVIDUAL COMPLETING THE REPORTS WITHIN THE PROJECT MANAGEMENT LOG.
3. REGULATORY INSPECTIONS
4. RESPONSES TO A COMPLIANCE ACTION OR ENFORCEMENT ACTION.
5. RECORDS SHOWING THE DATES OF ALL STORMWATER POLLUTION PREVENTION PLAN (SWP3) MODIFICATIONS. THE RECORDS MUST INCLUDE THE NAME OF THE PERSON AUTHORIZING EACH CHANGE AND SEND A SUMMARY OF ALL CHANGES.

C. CONTRACTOR SHALL ENSURE SWP3 AND ALL SUPPORTING DOCUMENTATION ASSOCIATED WITH THE SMP AND PROJECT MANAGEMENT LOG ARE ACCESSIBLE AT THE PROJECT SITE OFFICE OR IN THE POSSESSION OF ON-SITE INDIVIDUALS WITH RESPONSIBILITY FOR THE OVERALL PROJECT MANAGEMENT OR ASSOCIATED WITH THE MANAGEMENT AND OPERATIONS OF CONSTRUCTION ACTIVITIES. ALL INFORMATION MUST BE PROVIDED TO IDEM OR THE INSPECTING AUTHORITY WITHIN 48 HOURS OF A REQUEST.

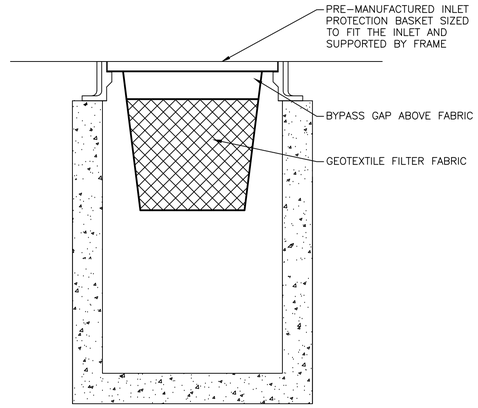

INSERT (BASKET) INLET PROTECTION
N.T.S.

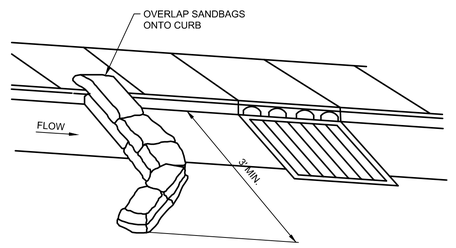

IN PAVED AREAS

SANDBAG DIVERSION AT CURB INLET
NO SCALE

For Public Viewing Only-Not For Downloading

COMMONWEALTH ENGINEERS, INC.
A wealth of resources to master a common goal.
https://commonwealthengineers.com/
BRIAN KREED WILSON REGISTERED No. PE11900866 STATE OF INDIANA PROFESSIONAL ENGINEER
Brian Wilson 8/15/2025
Signature Date

CITY OF KOKOMO, INDIANA
HOWARD COUNTY

NORTH SIDE INTERCEPTOR IMPROVEMENTS PROJECT

© 2025 BY COMMONWEALTH ENGINEERS, INC. ALL RIGHTS RESERVED. REPRODUCTION BY ANY METHOD IN WHOLE OR IN PART WITHOUT PERMISSION IS PROHIBITED

Know what's below. Call before you dig. 1-800-382-5544 (ITS THE LAW)

No.	Submittal Revision	By	Date

Designed By:	Drawn By:	Checked By:
BW	BW/CH/EK	JH
Issue Date: 8/2025	Project No: S21082	Scale: AS SHOWN

EROSION CONTROL DETAILS

Drawing No: EC13

Sheet: 111 OF 137

File: Z:\SHARED\IN CLIENTS A-L\KOKOMO\S21082 NORTH SIDE INTERCEPTOR DESIGN\06 CAD\A CURRENT FILES\1 DRAWINGS\09 - S21082 - EROSION CONTROL.DWG
Saved: 8/7/2025 10:15:28 AM Plotted: 8/7/2025 5:40:44 PM Current User: Bryce Persinger LastSavedBy: bpersinger

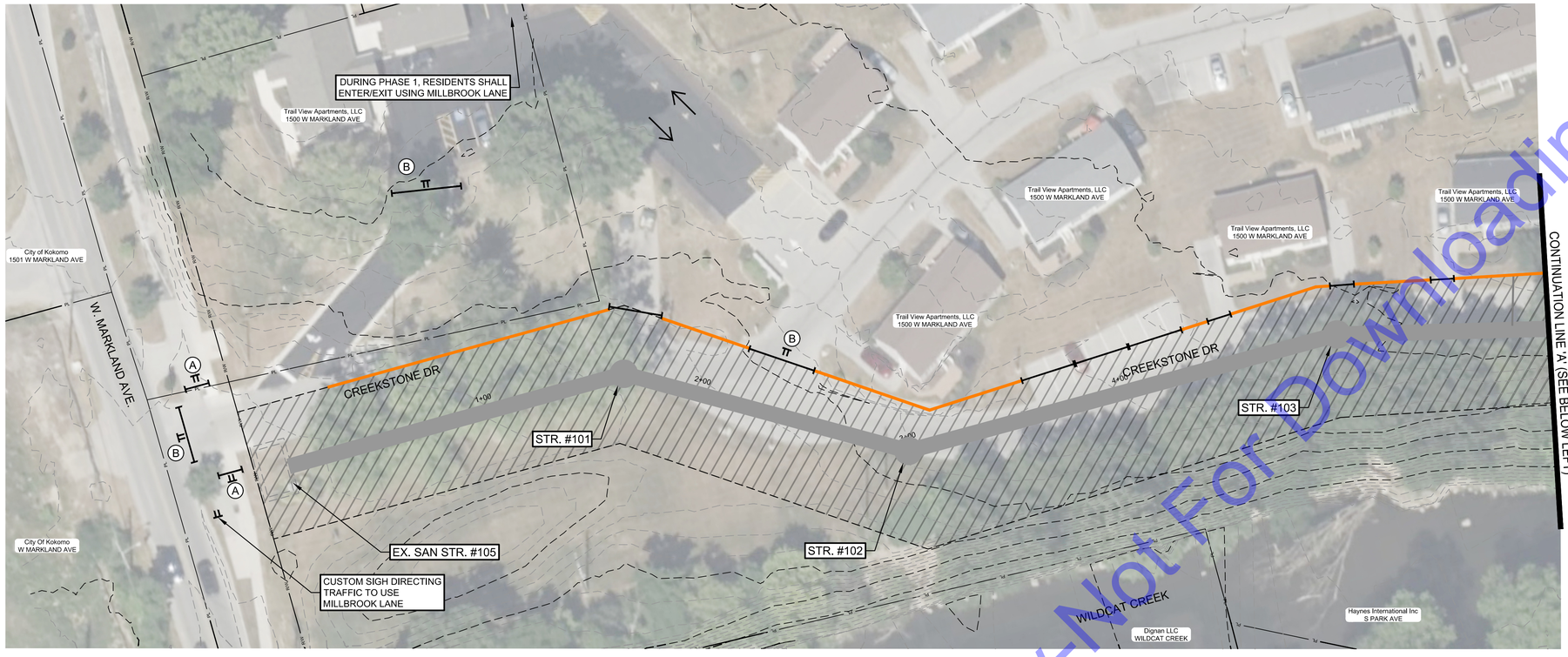

PLAN VIEW
SCALE: 1"=30'-0"

GENERAL NOTES:

1. ALL SIGNS, BARRICADES, AND OTHER TRAFFIC CONTROL DEVICES SHALL BE PLACED IN ACCORDANCE WITH THE LATEST ADDITION OF THE INDIANA MUTCD AND INDOT STANDARDS.
2. CONTRACTOR IS RESPONSIBLE FOR PROPER IMPLEMENTATION AND MAINTENANCE OF THE TRAFFIC CONTROL PLAN.
3. MAINTAIN ACCESS TO RESIDENCES AT ALL TIMES AND COORDINATE CLOSURE WITH RESIDENT.
4. DRIVEWAYS AND SIDEWALKS WILL NEED TO BE CLOSED FOR THIS WORK. CLOSELY SPACED DRUMS OR SIMILAR DEVICES SHOULD BE USED FOR THIS. ACCESS TO BUSINESSES AND RESIDENCES MUST BE MAINTAINED AT ALL TIMES, OR CLOSURES COORDINATED WITH LANDOWNER(S).
5. CONTRACTOR IS REQUIRED TO COORDINATE ROADWAY CLOSURES WITH THE LOCAL FIRE DEPARTMENT PRIOR TO IMPLEMENTATION.

SCALE: 1"=30'
30' 0 30'

Ⓐ SIDEWALK CLOSED (R9-9)
Ⓑ ROAD CLOSED R11-2
Ⓒ ROAD CLOSED TO THRU TRAFFIC R11-4

For Public Viewing Only-Not For Downloading

SCALE: 1"=30'
30' 0 30'

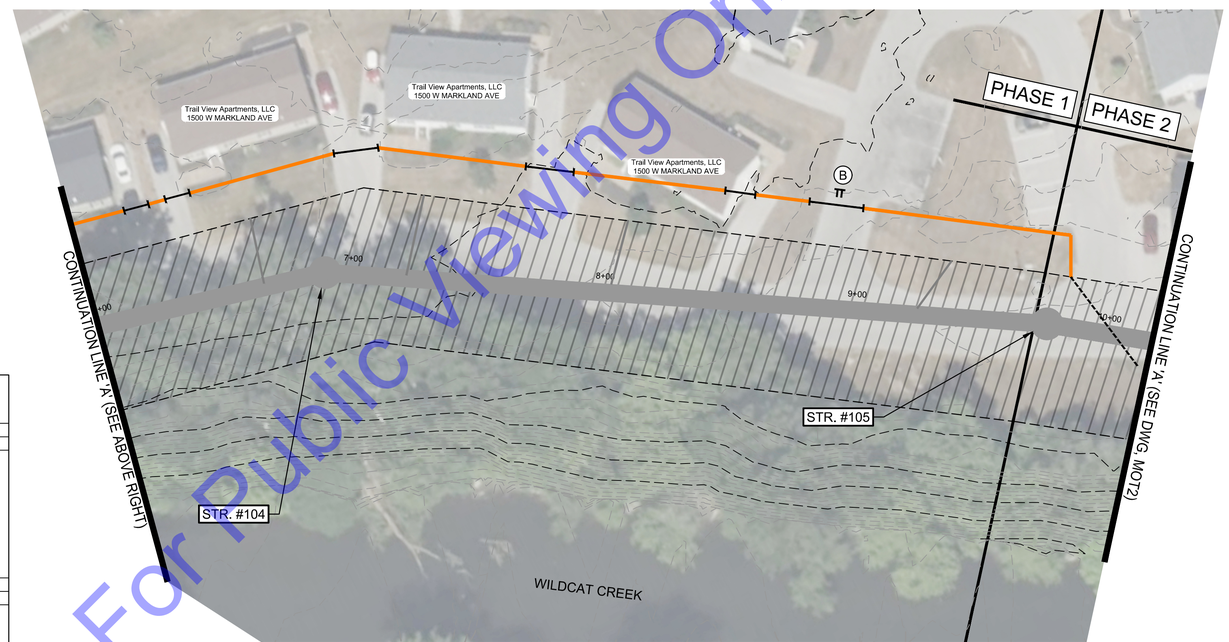

PLAN VIEW
SCALE: 1"=30'-0"

SIDEWALK CROSSING CLOSURE DETAIL
NO SCALE

GENERAL MOT PHASING NOTES:

1. OPEN ROAD SEGMENTS, AS POSSIBLE, TO ALLOW PROPERTY OWNER'S ACCESS.
2. EACH PHASE SHALL BE COMPLETED ENOUGH TO ALLOW TRAFFIC USE PRIOR TO STARTING A NEW PHASE UNLESS EXPRESSLY APPROVED BY THE CITY.
3. SIDEWALK CLOSURES DEPICTED HEREIN MAY NOT BE NEEDED FOR THE DURATION OF THE PHASE SHOWN. IN GENERAL, SIDEWALKS SHOULD BE CLOSED WHEN PEDESTRIAN TRAFFIC WILL BE WITHIN 20 FEET OF THE EXCAVATION OR WHERE CROSSING WILL RESULT IN BEING WITHIN 20 FEET OF THE EXCAVATION.
4. PHASE LINES ARE NOT INTENDED TO BE EXACT LOCATIONS, BUT TO DEPICT NECESSARY TRAFFIC ALLOWANCES. CONTRACTORS MAY ADJUST LOCATION WHILE MAINTAINING ACCESS SHOWN.

LEGEND:

- TYPE III BARRICADE
- CONSTRUCTION SIGN
- TRAFFIC FLOW
- WORK ZONE
- EASEMENT LIMITS FOR WORK ZONE
- CONCRETE WALL (TCB)
- DRUMS
- SNOW FENCING WITH CAUTION TAPE (OR SIMILAR DEVICE TO INDICATE WORK ZONE TO PROTECT PUBLIC AND RESTRICT ACCESS)

COMMONWEALTH ENGINEERS, INC.
A wealth of resources to master a common goal.
https://commonwealthengineers.com/

ROBIN LYNN MATHEWS
REGISTERED
PE10100897
STATE OF INDIANA
PROFESSIONAL ENGINEER
Signature 8/15/2025 Date

CITY OF KOKOMO, INDIANA
HOWARD COUNTY

NORTH SIDE INTERCEPTOR
IMPROVEMENTS PROJECT

© 2025 BY COMMONWEALTH ENGINEERS, INC. ALL RIGHTS RESERVED. REPRODUCTION BY ANY METHOD IN WHOLE OR IN PART WITHOUT PERMISSION IS PROHIBITED

Know what's below. Call before you dig. 1-800-382-5544 (ITS THE LAW)

No.	Submittal / Revision	By	Date

Designed By:	Drawn By:	Checked By:
RM	BW/CH/EK	JH
Issue Date: 8/2025	Project No: S21082	Scale: AS SHOWN

MAINTENANCE OF TRAFFIC - PHASE 1

Drawing No: MOT1
Sheet: 112 OF 137

File: Z:\SHARED\IN CLIENTS A-L\KOKOMO\S21082 NORTH SIDE INTERCEPTOR DESIGN\06 CAD\A CURRENT FILES\1 DRAWINGS\05 - S21082 - MOT PLAN.DWG
Saved: 8/8/2025 11:19:54 AM Plotted: 8/8/2025 11:46:19 AM Current User: Bryce Persinger LastSavedBy: bpersinger

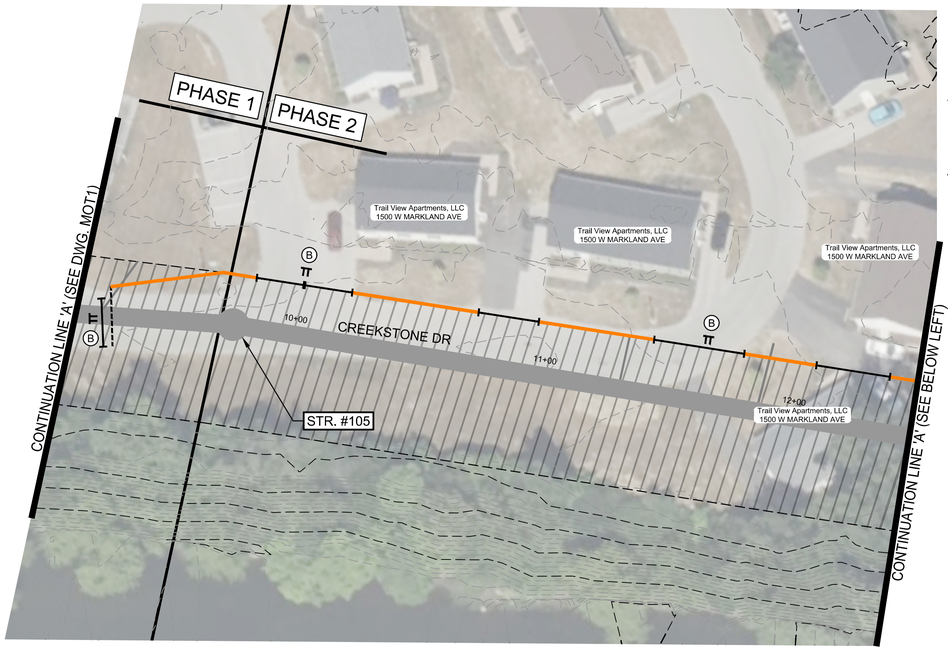

SCALE: 1"=30'

30' 0 30'

PLAN VIEW

SCALE: 1"=30'-0"

GENERAL MOT PHASING NOTES:

1. OPEN ROAD SEGMENTS, AS POSSIBLE, TO ALLOW PROPERTY OWNER'S ACCESS.
2. EACH PHASE SHALL BE COMPLETED ENOUGH TO ALLOW TRAFFIC USE PRIOR TO STARTING A NEW PHASE UNLESS EXPRESSLY APPROVED BY THE CITY.
3. SIDEWALK CLOSURES DEPICTED HEREIN MAY NOT BE NEEDED FOR THE DURATION OF THE PHASE SHOWN. IN GENERAL, SIDEWALKS SHOULD BE CLOSED WHEN PEDESTRIAN TRAFFIC WILL BE WITHIN 20 FEET OF THE EXCAVATION OR WHERE CROSSING WILL RESULT IN BEING WITHIN 20 FEET OF THE EXCAVATION.
4. PHASE LINES ARE NOT INTENDED TO BE EXACT LOCATIONS, BUT TO DEPICT NECESSARY TRAFFIC ALLOWANCES. CONTRACTORS MAY ADJUST LOCATION WHILE MAINTAINING ACCESS SHOWN.



PHASE 2 NOTES:

1. POST TRAIL CLOSED AHEAD AT KINGSTON ROAD.
2. POST TRAIL CLOSED AHEAD WHERE TRAIL CONNECTS TO TRAIL SYSTEM NEAR CARTER ST.
3. ONLY CLOSE ENTRANCE WHEN NECESSARY.
4. CLOSE TRAIL WHEN NECESSARY. ADVANCE NOTICE SHOULD BE PROVIDED AT MAPLE ST. TRAILHEAD.

LEGEND:

- TYPE III BARRICADE
- CONSTRUCTION SIGN
- TRAFFIC FLOW
- WORK ZONE
- EASEMENT LIMITS FOR WORK ZONE
- CONCRETE WALL (TCB)
- DRUMS
- SNOW FENCING WITH CAUTION TAPE (OR SIMILAR DEVICE TO INDICATE WORK ZONE TO PROTECT PUBLIC AND RESTRICT ACCESS)

GENERAL NOTES:

1. ALL SIGNS, BARRICADES, AND OTHER TRAFFIC CONTROL DEVICES SHALL BE PLACED IN ACCORDANCE WITH THE LATEST ADDITION OF THE INDIANA MUTCD AND INDOT STANDARDS.
2. CONTRACTOR IS RESPONSIBLE FOR PROPER IMPLEMENTATION AND MAINTENANCE OF THE TRAFFIC CONTROL PLAN.
3. MAINTAIN ACCESS TO RESIDENCES AT ALL TIMES AND COORDINATE CLOSURE WITH RESIDENT.
4. DRIVEWAYS AND SIDEWALKS WILL NEED TO BE CLOSED FOR THIS WORK. CLOSELY SPACED DRUMS OR SIMILAR DEVICES SHOULD BE USED FOR THIS. ACCESS TO BUSINESSES AND RESIDENCES MUST BE MAINTAINED AT ALL TIMES, OR CLOSURES COORDINATED WITH LANDOWNER(S).
5. CONTRACTOR IS REQUIRED TO COORDINATE ROADWAY CLOSURES WITH THE LOCAL FIRE DEPARTMENT PRIOR TO IMPLEMENTATION.

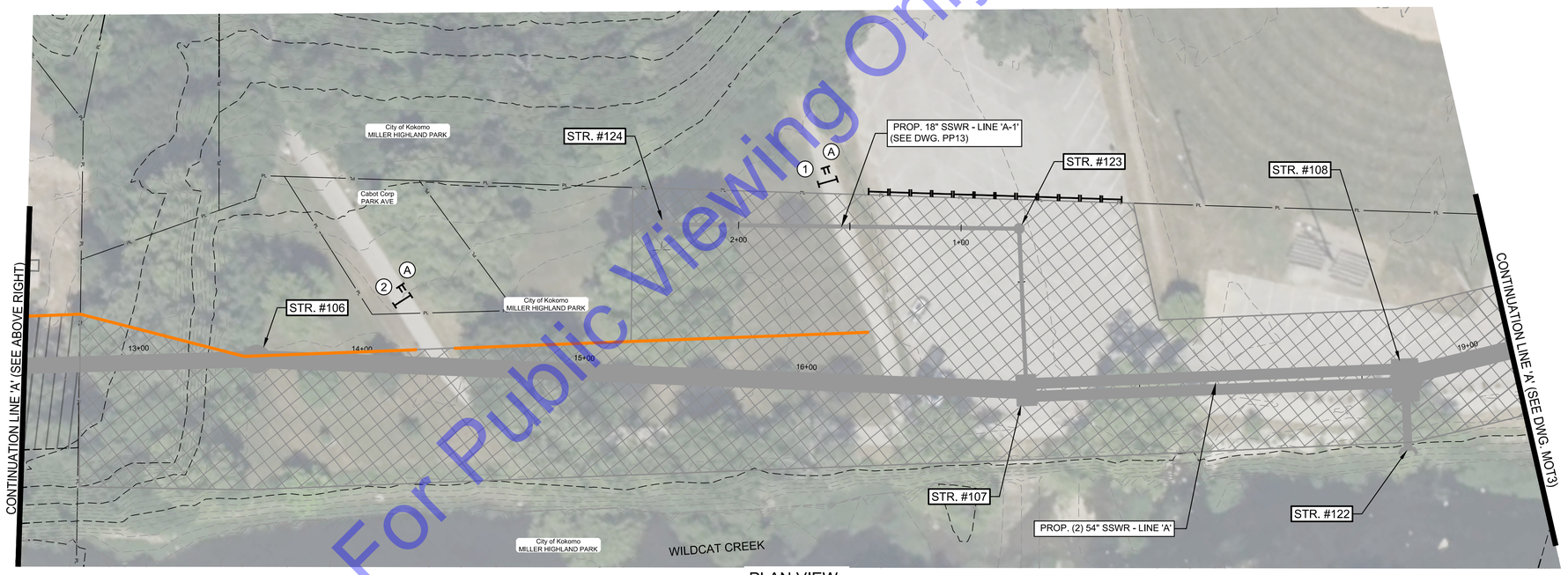

PLAN VIEW

SCALE: 1"=30'-0"

SCALE: 1"=30'

30' 0 30'

For Public Viewing Only-Not For Downloading

COMMONWEALTH ENGINEERS, INC.
A wealth of resources to master a common goal.
https://commonwealthengineers.com/

ROBIN LYNN MATHEWS
REGISTERED
PE10100897
STATE OF INDIANA
PROFESSIONAL ENGINEER
Signature 8/15/2025 Date

CITY OF KOKOMO, INDIANA
HOWARD COUNTY

NORTH SIDE INTERCEPTOR IMPROVEMENTS PROJECT

© 2025 BY COMMONWEALTH ENGINEERS, INC. ALL RIGHTS RESERVED. REPRODUCTION BY ANY METHOD IN WHOLE OR IN PART WITHOUT PERMISSION IS PROHIBITED

Know what's below. Call before you dig.
1-800-382-5544 (ITS THE LAW)

No.	Submittal Revision	By	Date

Designed By:	Drawn By:	Checked By:
RM	BW/CH/EK	JH
Issue Date: 8/2025	Project No: S21082	Scale: AS SHOWN

MAINTENANCE OF TRAFFIC - PHASE 2

Drawing No:
MOT2

Sheet: 113 OF 137

File: Z:\SHARED\IN CLIENTS A-L\KOKOMO\S21082 NORTH SIDE INTERCEPTOR DESIGN\06 CAD\A CURRENT FILES\1 DRAWINGS\05 - S21082 - MOT PLAN.DWG
Saved: 8/8/2025 11:19:54 AM Plotted: 8/8/2025 11:47:57 AM Current User: Bryce Persinger LastSavedBy: bpersinger

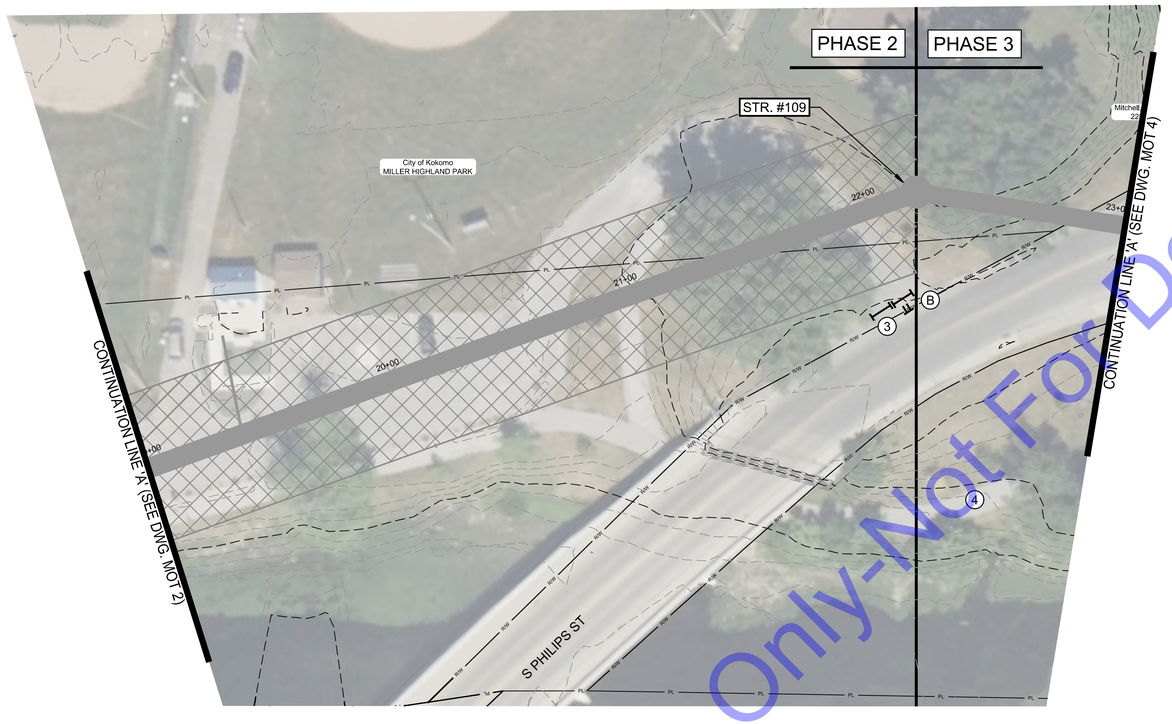

PLAN VIEW
SCALE: 1"=30'-0"

SCALE: 1"=30'

30' 0 30'

LEGEND:

- TYPE III BARRICADE
- CONSTRUCTION SIGN
- TRAFFIC FLOW
- WORK ZONE
- EASEMENT LIMITS FOR WORK ZONE
- CONCRETE WALL (TCB)
- DRUMS
- SNOW FENCING WITH CAUTION TAPE (OR SIMILAR DEVICE TO INDICATE WORK ZONE TO PROTECT PUBLIC AND RESTRICT ACCESS)

Ⓐ SIDEWALK CLOSED (R9-9)

Ⓑ ROAD CLOSED R11-2

Ⓒ ROAD CLOSED TO THRU TRAFFIC R11-4

GENERAL MOT PHASING NOTES:

1. OPEN ROAD SEGMENTS, AS POSSIBLE, TO ALLOW PROPERTY OWNER'S ACCESS.
2. EACH PHASE SHALL BE COMPLETED ENOUGH TO ALLOW TRAFFIC USE PRIOR TO STARTING A NEW PHASE UNLESS EXPRESSLY APPROVED BY THE CITY.
3. SIDEWALK CLOSURES DEPICTED HEREIN MAY NOT BE NEEDED FOR THE DURATION OF THE PHASE SHOWN. IN GENERAL, SIDEWALKS SHOULD BE CLOSED WHEN PEDESTRIAN TRAFFIC WILL BE WITHIN 20 FEET OF THE EXCAVATION OR WHERE CROSSING WILL RESULT IN BEING WITHIN 20 FEET OF THE EXCAVATION.
4. PHASE LINES ARE NOT INTENDED TO BE EXACT LOCATIONS, BUT TO DEPICT NECESSARY TRAFFIC ALLOWANCES. CONTRACTORS MAY ADJUST LOCATION WHILE MAINTAINING ACCESS SHOWN.

GENERAL NOTES:

1. ALL SIGNS, BARRICADES, AND OTHER TRAFFIC CONTROL DEVICES SHALL BE PLACED IN ACCORDANCE WITH THE LATEST ADDITION OF THE INDIANA MUTCD AND INDOT STANDARDS.
2. CONTRACTOR IS RESPONSIBLE FOR PROPER IMPLEMENTATION AND MAINTENANCE OF THE TRAFFIC CONTROL PLAN.
3. MAINTAIN ACCESS TO RESIDENCES AT ALL TIMES AND COORDINATE CLOSURE WITH RESIDENT.
4. DRIVEWAYS AND SIDEWALKS WILL NEED TO BE CLOSED FOR THIS WORK. CLOSELY SPACED DRUMS OR SIMILAR DEVICES SHOULD BE USED FOR THIS. ACCESS TO BUSINESSES AND RESIDENCES MUST BE MAINTAINED AT ALL TIMES, OR CLOSURES COORDINATED WITH LANDOWNER(S).
5. CONTRACTOR IS REQUIRED TO COORDINATE ROADWAY CLOSURES WITH THE LOCAL FIRE DEPARTMENT PRIOR TO IMPLEMENTATION.

PHASE 2 NOTES:

1. POST TRAIL CLOSED AHEAD AT KINGSTON ROAD.
2. POST TRAIL CLOSED AHEAD WHERE TRAIL CONNECTS TO TRAIL SYSTEM NEAR CARTER ST.
3. ONLY CLOSE ENTRANCE WHEN NECESSARY.
4. CLOSE TRAIL WHEN NECESSARY. ADVANCE NOTICE SHOULD BE PROVIDED AT MAPLE ST. TRAILHEAD.

For Public Viewing Only-Not For Downloading

COMMONWEALTH ENGINEERS, INC.
A wealth of resources to master a common goal.
https://commonwealthengineers.com/

ROBIN LYNN MATHEWS
REGISTERED
PE10100897
STATE OF INDIANA
PROFESSIONAL ENGINEER
Signature 8/15/2025 Date

CITY OF KOKOMO, INDIANA
HOWARD COUNTY

NORTH SIDE INTERCEPTOR IMPROVEMENTS PROJECT

© 2025 BY COMMONWEALTH ENGINEERS, INC. ALL RIGHTS RESERVED. REPRODUCTION BY ANY METHOD IN WHOLE OR IN PART WITHOUT PERMISSION IS PROHIBITED

Indiana 811 Know what's below. Call before you dig.
Know what's below. 811 before you dig.
1-800-382-5544 (IT'S THE LAW)

No.	Submittal / Revision	By	Date

Designed By:	Drawn By:	Checked By:
RM	BW/CH/EK	JH
Issue Date:	Project No:	Scale:
8/2025	S21082	AS SHOWN

MAINTENANCE OF TRAFFIC - PHASE 2

Drawing No: MOT3

Sheet: 114 OF 137

File: Z:\SHARED\IN CLIENTS A-L\KOKOMO\S21082 NORTH SIDE INTERCEPTOR DESIGN\06 CAD\A CURRENT FILES\1 DRAWINGS\05 - S21082 - MOT PLAN.DWG
Saved: 8/6/2025 11:19:54 AM Plotted: 8/6/2025 11:49:14 AM Current User: Bryce Persinger LastSavedBy: bpersinger

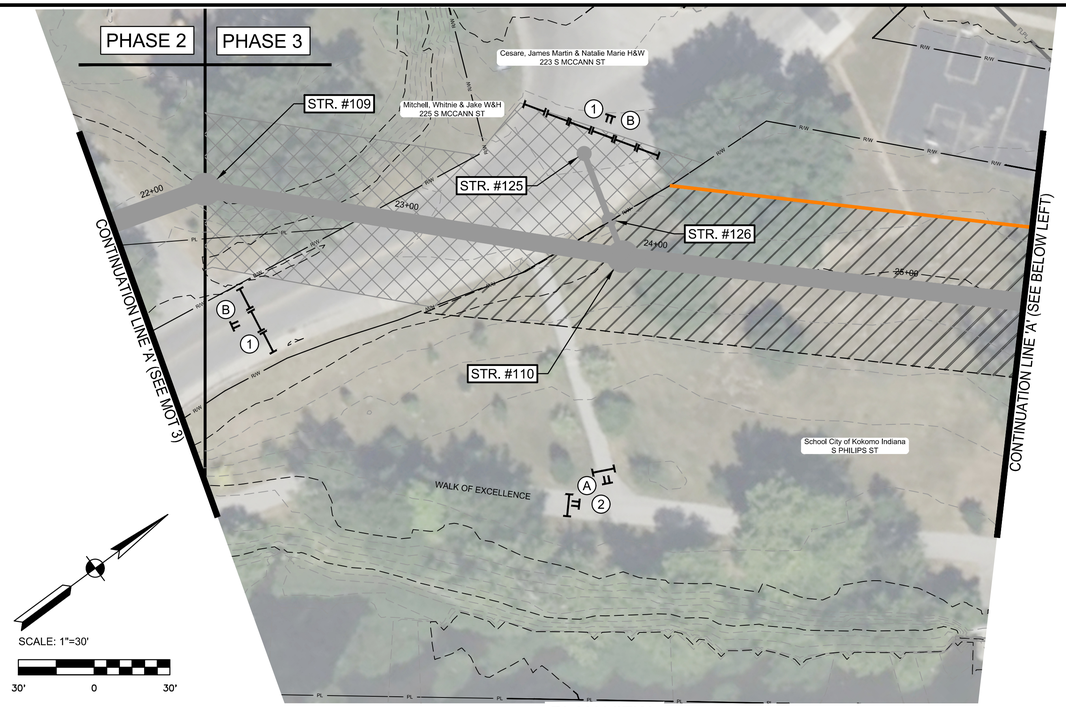

PLAN VIEW
SCALE: 1"=30'-0"

GENERAL MOT PHASING NOTES:

1. OPEN ROAD SEGMENTS, AS POSSIBLE, TO ALLOW PROPERTY OWNER'S ACCESS.
2. EACH PHASE SHALL BE COMPLETED ENOUGH TO ALLOW TRAFFIC USE PRIOR TO STARTING A NEW PHASE UNLESS EXPRESSLY APPROVED BY THE CITY.
3. SIDEWALK CLOSURES DEPICTED HEREIN MAY NOT BE NEEDED FOR THE DURATION OF THE PHASE SHOWN. IN GENERAL, SIDEWALKS SHOULD BE CLOSED WHEN PEDESTRIAN TRAFFIC WILL BE WITHIN 20 FEET OF THE EXCAVATION OR WHERE CROSSING WILL RESULT IN BEING WITHIN 20 FEET OF THE EXCAVATION.
4. PHASE LINES ARE NOT INTENDED TO BE EXACT LOCATIONS, BUT TO DEPICT NECESSARY TRAFFIC ALLOWANCES. CONTRACTORS MAY ADJUST LOCATION WHILE MAINTAINING ACCESS SHOWN.

PHASE 3 NOTES:

1. SEE DETOUR ROUTE PLANS FOR THIS PHASE. ALLOW ACCESS TO BALLFIELDS WHEN POSSIBLE.
2. CLOSE TRAIL WHEN NECESSARY. ADVANCE NOTICE SHOULD BE PROVIDED AT MAPLE ST. TRAILHEAD.
3. TEMPORARY ACCESS DRIVE. SEE MISCELLANEOUS DETAILS.
4. COORDINATE WITH CITY TO PROVIDE TEMPORARY PARKING. SEE CONTRACT SPECIFICATIONS FOR MORE INFORMATION.

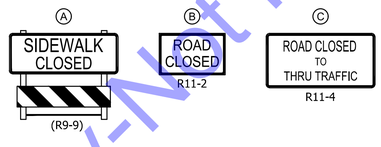

LEGEND:

- TYPE III BARRICADE
- CONSTRUCTION SIGN
- TRAFFIC FLOW
- WORK ZONE
- EASEMENT LIMITS FOR WORK ZONE
- CONCRETE WALL (TCB)
- DRUMS
- SNOW FENCING WITH CAUTION TAPE (OR SIMILAR DEVICE TO INDICATE WORK ZONE TO PROTECT PUBLIC AND RESTRICT ACCESS)

GENERAL NOTES:

1. ALL SIGNS, BARRICADES, AND OTHER TRAFFIC CONTROL DEVICES SHALL BE PLACED IN ACCORDANCE WITH THE LATEST ADDITION OF THE INDIANA MUTCD AND INDOT STANDARDS.
2. CONTRACTOR IS RESPONSIBLE FOR PROPER IMPLEMENTATION AND MAINTENANCE OF THE TRAFFIC CONTROL PLAN.
3. MAINTAIN ACCESS TO RESIDENCES AT ALL TIMES AND COORDINATE CLOSURE WITH RESIDENT.
4. DRIVEWAYS AND SIDEWALKS WILL NEED TO BE CLOSED FOR THIS WORK. CLOSELY SPACED DRUMS OR SIMILAR DEVICES SHOULD BE USED FOR THIS. ACCESS TO BUSINESSES AND RESIDENCES MUST BE MAINTAINED AT ALL TIMES, OR CLOSURES COORDINATED WITH LANDOWNER(S).
5. CONTRACTOR IS REQUIRED TO COORDINATE ROADWAY CLOSURES WITH THE LOCAL FIRE DEPARTMENT PRIOR TO IMPLEMENTATION.

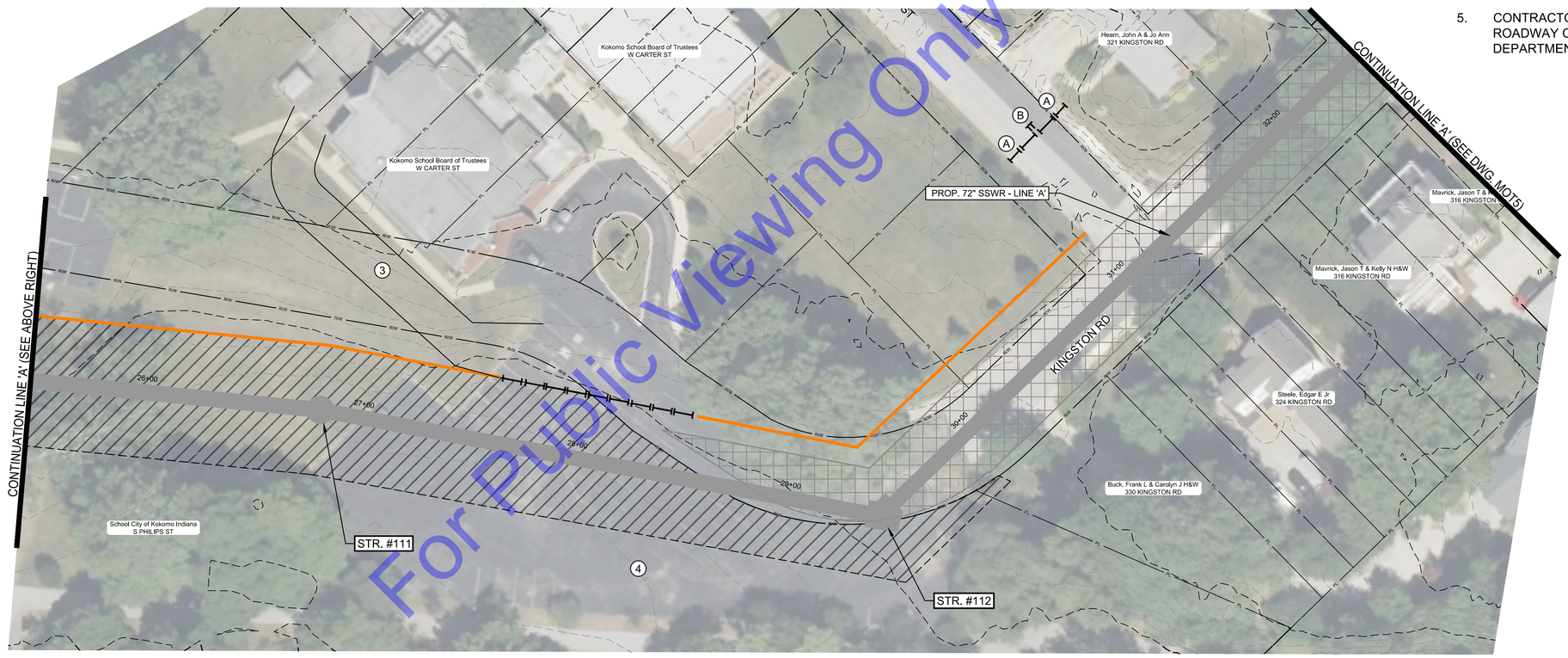

PLAN VIEW
SCALE: 1"=30'-0"

For Public Viewing Only-Not For Downloading

COMMONWEALTH ENGINEERS, INC.
A wealth of resources to master a common goal.
https://commonwealthengineers.com/

ROBIN LYNN MATHEWS
REGISTERED
PE10100897
STATE OF INDIANA
PROFESSIONAL ENGINEER

Signature 8/15/2025 Date

CITY OF KOKOMO, INDIANA
HOWARD COUNTY

NORTH SIDE INTERCEPTOR IMPROVEMENTS PROJECT

© 2025 BY COMMONWEALTH ENGINEERS, INC. ALL RIGHTS RESERVED. REPRODUCTION BY ANY METHOD IN WHOLE OR IN PART WITHOUT PERMISSION IS PROHIBITED

Know what's below. Call before you dig.
1-800-382-5544 (IT'S THE LAW)

No.	Submittal/Revision	By	Date

Designed By:	Drawn By:	Checked By:
RM	BW/CH/EK	JH
Issue Date:	Project No:	Scale:
8/2025	S21082	AS SHOWN

MAINTENANCE OF TRAFFIC - PHASE 3

Drawing No:
MOT4
Sheet: 115 OF 137

File: Z:\SHARED\IN CLIENTS A-L\KOKOMO\S21082 NORTH SIDE INTERCEPTOR DESIGN\06 CAD\A CURRENT FILES\1 DRAWINGS\05 - S21082 - MOT PLAN.DWG
Saved: 8/8/2025 11:19:54 AM Plotted: 8/8/2025 11:51:02 AM Current User: Bryce Persinger LastSavedBy: bpersinger

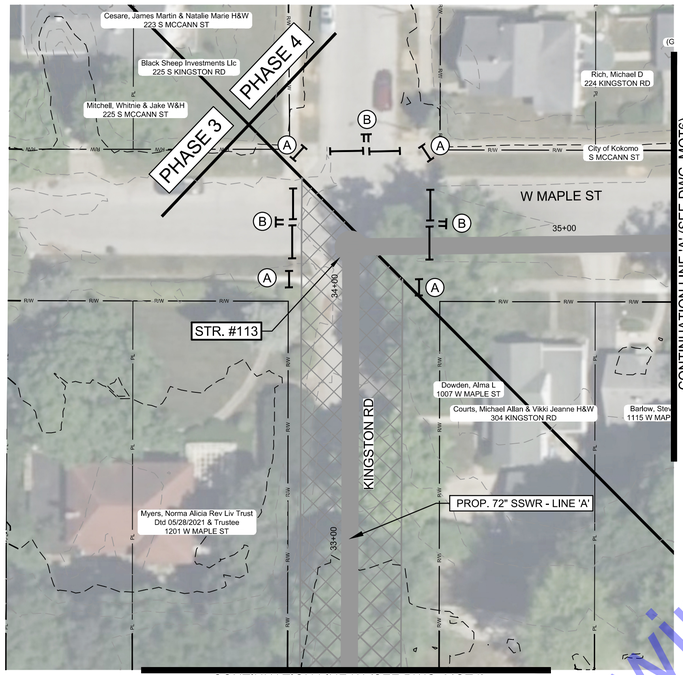

PLAN VIEW
SCALE: 1"=30'-0"

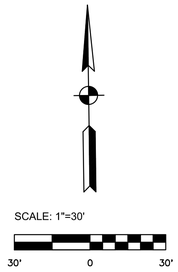

LEGEND:

- TYPE III BARRICADE
- CONSTRUCTION SIGN
- TRAFFIC FLOW
- WORK ZONE
- EASEMENT LIMITS FOR WORK ZONE
- CONCRETE WALL (TCB)
- DRUMS
- SNOW FENCING WITH CAUTION TAPE (OR SIMILAR DEVICE TO INDICATE WORK ZONE TO PROTECT PUBLIC AND RESTRICT ACCESS)



PHASE 3 NOTES:

1. SEE DETOUR ROUTE PLANS FOR THIS PHASE. ALLOW ACCESS TO BALLFIELDS WHEN POSSIBLE.
2. CLOSE TRAIL WHEN NECESSARY. ADVANCE NOTICE SHOULD BE PROVIDED AT MAPLE ST. TRAILHEAD.
3. TEMPORARY ACCESS DRIVE. SEE MISCELLANEOUS DETAILS.

GENERAL MOT PHASING NOTES:

1. OPEN ROAD SEGMENTS, AS POSSIBLE, TO ALLOW PROPERTY OWNER'S ACCESS.
2. EACH PHASE SHALL BE COMPLETED ENOUGH TO ALLOW TRAFFIC USE PRIOR TO STARTING A NEW PHASE UNLESS EXPRESSLY APPROVED BY THE CITY.
3. SIDEWALK CLOSURES DEPICTED HEREIN MAY NOT BE NEEDED FOR THE DURATION OF THE PHASE SHOWN. IN GENERAL, SIDEWALKS SHOULD BE CLOSED WHEN PEDESTRIAN TRAFFIC WILL BE WITHIN 20 FEET OF THE EXCAVATION OR WHERE CROSSING WILL RESULT IN BEING WITHIN 20 FEET OF THE EXCAVATION.
4. PHASE LINES ARE NOT INTENDED TO BE EXACT LOCATIONS, BUT TO DEPICT NECESSARY TRAFFIC ALLOWANCES. CONTRACTORS MAY ADJUST LOCATION WHILE MAINTAINING ACCESS SHOWN.

GENERAL NOTES:

1. ALL SIGNS, BARRICADES, AND OTHER TRAFFIC CONTROL DEVICES SHALL BE PLACED IN ACCORDANCE WITH THE LATEST ADDITION OF THE INDIANA MUTCD AND INDOT STANDARDS.
2. CONTRACTOR IS RESPONSIBLE FOR PROPER IMPLEMENTATION AND MAINTENANCE OF THE TRAFFIC CONTROL PLAN.
3. MAINTAIN ACCESS TO RESIDENCES AT ALL TIMES AND COORDINATE CLOSURE WITH RESIDENT.
4. DRIVEWAYS AND SIDEWALKS WILL NEED TO BE CLOSED FOR THIS WORK. CLOSELY SPACED DRUMS OR SIMILAR DEVICES SHOULD BE USED FOR THIS. ACCESS TO BUSINESSES AND RESIDENCES MUST BE MAINTAINED AT ALL TIMES, OR CLOSURES COORDINATED WITH LANDOWNER(S).
5. CONTRACTOR IS REQUIRED TO COORDINATE ROADWAY CLOSURES WITH THE LOCAL FIRE DEPARTMENT PRIOR TO IMPLEMENTATION.

For Public Viewing Only-Not For Download

COMMONWEALTH ENGINEERS, INC.
A wealth of resources to master a common goal.
https://commonwealthengineers.com/

ROBIN LYNN MATTHEWS
REGISTERED
PE10100897
STATE OF INDIANA
PROFESSIONAL ENGINEER

Signature 8/15/2025 Date

CITY OF KOKOMO, INDIANA
HOWARD COUNTY

NORTH SIDE INTERCEPTOR IMPROVEMENTS PROJECT

© 2025 BY COMMONWEALTH ENGINEERS, INC. ALL RIGHTS RESERVED. REPRODUCTION BY ANY METHOD IN WHOLE OR IN PART WITHOUT PERMISSION IS PROHIBITED

Indiana 811 Know what's below. Call before you dig.
Know what's below. 811 before you dig.
1-800-382-5544 (ITS THE LAW)

No.	Submittal / Revision	By	Date

Designed By:	Drawn By:	Checked By:
RM	BW/CH/EK	JH
Issue Date: 8/2025	Project No: S21082	Scale: AS SHOWN

MAINTENANCE OF TRAFFIC - PHASE 3

Drawing No:
MOT5
Sheet: 116 OF 137

File: Z:\SHARED\IN CLIENTS A-L\KOKOMO\S21082 NORTH SIDE INTERCEPTOR DESIGN\06 CAD\A CURRENT FILES\1 DRAWINGS\05 - S21082 - MOT PLAN.DWG
Saved: 8/8/2025 11:19:54 AM Plotted: 8/8/2025 11:52:21 AM Current User: Bryce Persinger LastSavedBy: bpersinger

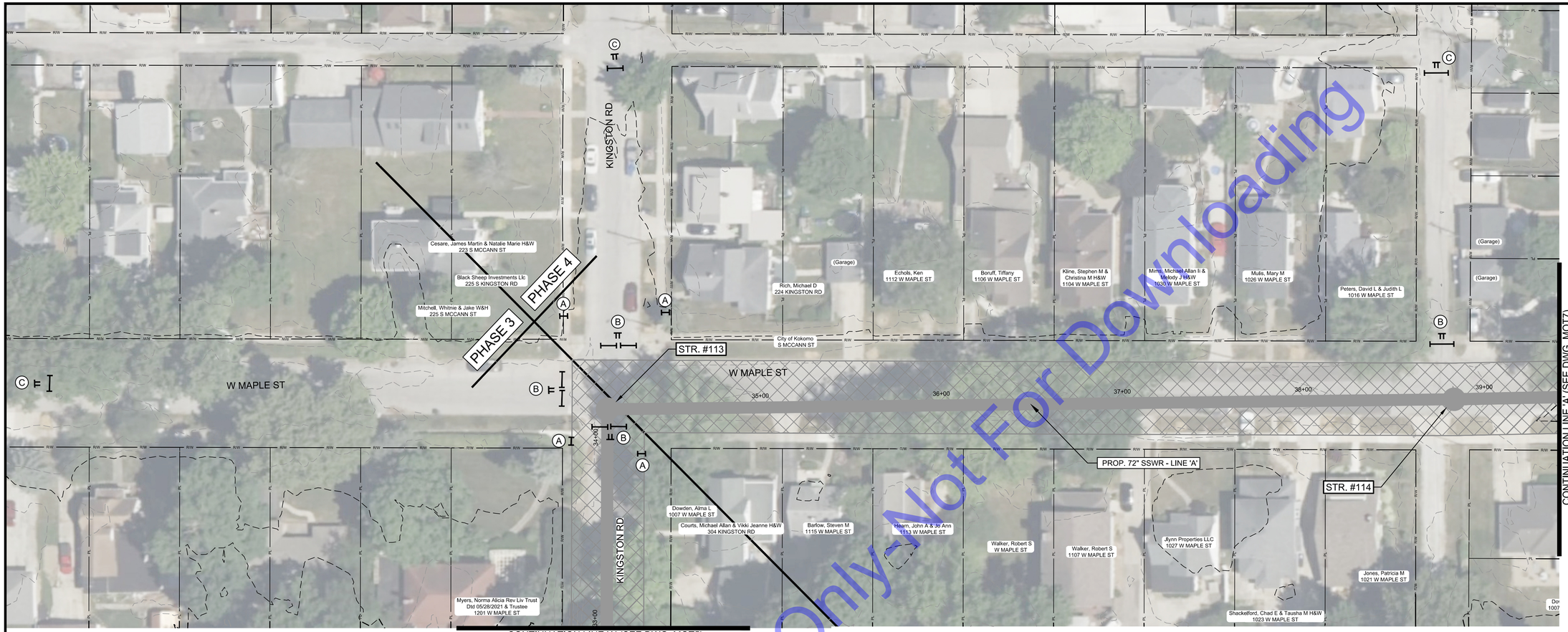

PLAN VIEW

SCALE: 1"=30'-0"

SCALE: 1"=30'

30' 0 30'

LEGEND:

- TYPE III BARRICADE
- CONSTRUCTION SIGN
- TRAFFIC FLOW
- WORK ZONE
- EASEMENT LIMITS FOR WORK ZONE
- CONCRETE WALL (TCB)
- DRUMS
- SNOW FENCING WITH CAUTION TAPE (OR SIMILAR DEVICE TO INDICATE WORK ZONE TO PROTECT PUBLIC AND RESTRICT ACCESS)

(A) SIDEWALK CLOSED (R9-9)

(B) ROAD CLOSED R11-2

(C) ROAD CLOSED TO THRU TRAFFIC R11-4

GENERAL MOT PHASING NOTES:

1. OPEN ROAD SEGMENTS, AS POSSIBLE, TO ALLOW PROPERTY OWNER'S ACCESS.
2. EACH PHASE SHALL BE COMPLETED ENOUGH TO ALLOW TRAFFIC USE PRIOR TO STARTING A NEW PHASE UNLESS EXPRESSLY APPROVED BY THE CITY.
3. SIDEWALK CLOSURES DEPICTED HEREIN MAY NOT BE NEEDED FOR THE DURATION OF THE PHASE SHOWN. IN GENERAL, SIDEWALKS SHOULD BE CLOSED WHEN PEDESTRIAN TRAFFIC WILL BE WITHIN 20 FEET OF THE EXCAVATION OR WHERE CROSSING WILL RESULT IN BEING WITHIN 20 FEET OF THE EXCAVATION.
4. PHASE LINES ARE NOT INTENDED TO BE EXACT LOCATIONS, BUT TO DEPICT NECESSARY TRAFFIC ALLOWANCES. CONTRACTORS MAY ADJUST LOCATION WHILE MAINTAINING ACCESS SHOWN.

GENERAL NOTES:

1. ALL SIGNS, BARRICADES, AND OTHER TRAFFIC CONTROL DEVICES SHALL BE PLACED IN ACCORDANCE WITH THE LATEST ADDITION OF THE INDIANA MUTCD AND INDOT STANDARDS.
2. CONTRACTOR IS RESPONSIBLE FOR PROPER IMPLEMENTATION AND MAINTENANCE OF THE TRAFFIC CONTROL PLAN.
3. MAINTAIN ACCESS TO RESIDENCES AT ALL TIMES AND COORDINATE CLOSURE WITH RESIDENT.
4. DRIVEWAYS AND SIDEWALKS WILL NEED TO BE CLOSED FOR THIS WORK. CLOSELY SPACED DRUMS OR SIMILAR DEVICES SHOULD BE USED FOR THIS. ACCESS TO BUSINESSES AND RESIDENCES MUST BE MAINTAINED AT ALL TIMES, OR CLOSURES COORDINATED WITH LANDOWNER(S).
5. CONTRACTOR IS REQUIRED TO COORDINATE ROADWAY CLOSURES WITH THE LOCAL FIRE DEPARTMENT PRIOR TO IMPLEMENTATION.

PHASE 4 NOTES:

1. CLOSE ALLEY AS NEEDED.
2. CLOSE MAPLE ST. AFTER MCCANN ST. IS OPEN TO TRAFFIC.
3. CLOSE MAPLE ST. WHEN NEEDED.
4. CLOSE ENTRANCE TO PARKING LOT AS NEEDED.
5. BEGIN PHASE 5 MOT WHEN ENCROACHING WITHIN 20 FT. OF W. SUPERIOR ST.

For Public Viewing Only-Not For Downloading

COMMONWEALTH ENGINEERS, INC.
A wealth of resources to master a common goal.
https://commonwealthengineers.com/

ROBIN LYNN MATHEWS
REGISTERED
PE10100897
STATE OF INDIANA
PROFESSIONAL ENGINEER

Signature 8/15/2025 Date

CITY OF KOKOMO, INDIANA
HOWARD COUNTY

NORTH SIDE INTERCEPTOR
IMPROVEMENTS PROJECT

© 2025 BY COMMONWEALTH ENGINEERS, INC. ALL RIGHTS RESERVED. REPRODUCTION BY ANY METHOD IN WHOLE OR IN PART WITHOUT PERMISSION IS PROHIBITED

Know what's below. Call before you dig. 811
Know what's below. 811 before you dig.
1-800-382-5544 (ITS THE LAW)

No.	Submittal / Revision	By	Date

Designed By:	Drawn By:	Checked By:
RM	BW/CH/EK	JH
Issue Date:	Project No:	Scale:
8/2025	S21082	AS SHOWN

MAINTENANCE OF TRAFFIC - PHASE 4

Drawing No: MOT6

Sheet: 117 OF 137

File: Z:\SHARED\IN CLIENTS A-L\KOKOMO\S21082 NORTH SIDE INTERCEPTOR DESIGN\06 CAD\A CURRENT FILES\1 DRAWINGS\05 - S21082 - MOT PLAN.DWG
Saved: 8/8/2025 11:19:54 AM Plotted: 8/8/2025 11:53:49 AM Current User: Bryce Persinger LastSavedBy: bpersinger



PLAN VIEW
SCALE: 1"=30'-0"

SCALE: 1"=30'
30' 0 30'

(A) SIDEWALK CLOSED (R9-9)

(B) ROAD CLOSED R11-2

(C) ROAD CLOSED TO THRU TRAFFIC R11-4

LEGEND:

- TYPE III BARRICADE
- CONSTRUCTION SIGN
- TRAFFIC FLOW
- WORK ZONE
- EASEMENT LIMITS FOR WORK ZONE
- CONCRETE WALL (TCB)
- DRUMS
- SNOW FENCING WITH CAUTION TAPE (OR SIMILAR DEVICE TO INDICATE WORK ZONE TO PROTECT PUBLIC AND RESTRICT ACCESS)

PHASE 4 NOTES:

1. CLOSE ALLEY AS NEEDED.
2. CLOSE ENTRANCE TO PARKING LOT AS NEEDED.

GENERAL MOT PHASING NOTES:

1. OPEN ROAD SEGMENTS, AS POSSIBLE, TO ALLOW PROPERTY OWNER'S ACCESS.
2. EACH PHASE SHALL BE COMPLETED ENOUGH TO ALLOW TRAFFIC USE PRIOR TO STARTING A NEW PHASE UNLESS EXPRESSLY APPROVED BY THE CITY.
3. SIDEWALK CLOSURES DEPICTED HEREIN MAY NOT BE NEEDED FOR THE DURATION OF THE PHASE SHOWN. IN GENERAL, SIDEWALKS SHOULD BE CLOSED WHEN PEDESTRIAN TRAFFIC WILL BE WITHIN 20 FEET OF THE EXCAVATION OR WHERE CROSSING WILL RESULT IN BEING WITHIN 20 FEET OF THE EXCAVATION.
4. PHASE LINES ARE NOT INTENDED TO BE EXACT LOCATIONS, BUT TO DEPICT NECESSARY TRAFFIC ALLOWANCES. CONTRACTORS MAY ADJUST LOCATION WHILE MAINTAINING ACCESS SHOWN.

GENERAL NOTES:

1. ALL SIGNS, BARRICADES, AND OTHER TRAFFIC CONTROL DEVICES SHALL BE PLACED IN ACCORDANCE WITH THE LATEST ADDITION OF THE INDIANA MUTCD AND INDOT STANDARDS.
2. CONTRACTOR IS RESPONSIBLE FOR PROPER IMPLEMENTATION AND MAINTENANCE OF THE TRAFFIC CONTROL PLAN.
3. MAINTAIN ACCESS TO RESIDENCES AT ALL TIMES AND COORDINATE CLOSURE WITH RESIDENT.
4. DRIVEWAYS AND SIDEWALKS WILL NEED TO BE CLOSED FOR THIS WORK. CLOSELY SPACED DRUMS OR SIMILAR DEVICES SHOULD BE USED FOR THIS. ACCESS TO BUSINESSES AND RESIDENCES MUST BE MAINTAINED AT ALL TIMES, OR CLOSURES COORDINATED WITH LANDOWNER(S).
5. CONTRACTOR IS REQUIRED TO COORDINATE ROADWAY CLOSURES WITH THE LOCAL FIRE DEPARTMENT PRIOR TO IMPLEMENTATION.

For Public Viewing Only-Not For Download

COMMONWEALTH ENGINEERS, INC.
A wealth of resources to master a common goal.
https://commonwealthengineers.com/

ROBIN LYNN MATTHEWS
REGISTERED
PE10100897
STATE OF INDIANA
PROFESSIONAL ENGINEER

Signature 8/15/2025 Date

CITY OF KOKOMO, INDIANA
HOWARD COUNTY

NORTH SIDE INTERCEPTOR
IMPROVEMENTS PROJECT

© 2025 BY COMMONWEALTH ENGINEERS, INC. ALL RIGHTS RESERVED. REPRODUCTION BY ANY METHOD IN WHOLE OR IN PART WITHOUT PERMISSION IS PROHIBITED

Know what's below. Call before you dig. 811 Indiana
Know what's below. 811 before you dig.
1-800-382-5544
(ITS THE LAW)

No.	Submittal / Revision	By	Date

Designed By:	Drawn By:	Checked By:
RM	BW/CH/EK	JH
Issue Date: 8/2025	Project No: S21082	Scale: AS SHOWN

MAINTENANCE OF TRAFFIC - PHASE 4

Drawing No: MOT7

Sheet: 118 OF 137

File: Z:\SHARED\IN CLIENTS A-L\KOKOMO\S21082 NORTH SIDE INTERCEPTOR DESIGN\06 CAD\A CURRENT FILES\1 DRAWINGS\05 - S21082 - MOT PLAN.DWG
Saved: 8/8/2025 11:19:54 AM Plotted: 8/8/2025 11:55:05 AM Current User: Bryce Persinger LastSavedBy: bpersinger



PLAN VIEW
SCALE: 1"=30'-0"

SCALE: 1"=30'
30' 0 30'

GENERAL MOT PHASING NOTES:

1. OPEN ROAD SEGMENTS, AS POSSIBLE, TO ALLOW PROPERTY OWNER'S ACCESS.
2. EACH PHASE SHALL BE COMPLETED ENOUGH TO ALLOW TRAFFIC USE PRIOR TO STARTING A NEW PHASE UNLESS EXPRESSLY APPROVED BY THE CITY.
3. SIDEWALK CLOSURES DEPICTED HEREIN MAY NOT BE NEEDED FOR THE DURATION OF THE PHASE SHOWN. IN GENERAL, SIDEWALKS SHOULD BE CLOSED WHEN PEDESTRIAN TRAFFIC WILL BE WITHIN 20 FEET OF THE EXCAVATION OR WHERE CROSSING WILL RESULT IN BEING WITHIN 20 FEET OF THE EXCAVATION.
4. PHASE LINES ARE NOT INTENDED TO BE EXACT LOCATIONS, BUT TO DEPICT NECESSARY TRAFFIC ALLOWANCES. CONTRACTORS MAY ADJUST LOCATION WHILE MAINTAINING ACCESS SHOWN.

GENERAL NOTES:

1. ALL SIGNS, BARRICADES, AND OTHER TRAFFIC CONTROL DEVICES SHALL BE PLACED IN ACCORDANCE WITH THE LATEST ADDITION OF THE INDIANA MUTCD AND INDOT STANDARDS.
2. CONTRACTOR IS RESPONSIBLE FOR PROPER IMPLEMENTATION AND MAINTENANCE OF THE TRAFFIC CONTROL PLAN.
3. MAINTAIN ACCESS TO RESIDENCES AT ALL TIMES AND COORDINATE CLOSURE WITH RESIDENT.
4. DRIVEWAYS AND SIDEWALKS WILL NEED TO BE CLOSED FOR THIS WORK. CLOSELY SPACED DRUMS OR SIMILAR DEVICES SHOULD BE USED FOR THIS. ACCESS TO BUSINESSES AND RESIDENCES MUST BE MAINTAINED AT ALL TIMES, OR CLOSURES COORDINATED WITH LANDOWNER(S).
5. CONTRACTOR IS REQUIRED TO COORDINATE ROADWAY CLOSURES WITH THE LOCAL FIRE DEPARTMENT PRIOR TO IMPLEMENTATION.

LEGEND:

- TYPE III BARRICADE
- CONSTRUCTION SIGN
- TRAFFIC FLOW
- WORK ZONE
- EASEMENT LIMITS FOR WORK ZONE
- CONCRETE WALL (TCB)
- DRUMS
- SNOW FENCING WITH CAUTION TAPE (OR SIMILAR DEVICE TO INDICATE WORK ZONE TO PROTECT PUBLIC AND RESTRICT ACCESS)

Ⓐ SIDEWALK CLOSED (R9-9)

Ⓑ ROAD CLOSED R11-2

Ⓒ ROAD CLOSED TO THRU TRAFFIC R11-4

PHASE 4 NOTES:

① CLOSE ALLEY AS NEEDED.

② CLOSE ENTRANCE TO PARKING LOT AS NEEDED.

For Public Viewing Only-Not For Downloading

COMMONWEALTH ENGINEERS, INC.
A wealth of resources to master a common goal.
https://commonwealthengineers.com/

ROBIN LYNN MATHEWS
REGISTERED
PE10100897
STATE OF INDIANA
PROFESSIONAL ENGINEER
Signature 8/15/2025 Date

CITY OF KOKOMO, INDIANA
HOWARD COUNTY

NORTH SIDE INTERCEPTOR IMPROVEMENTS PROJECT

© 2025 BY COMMONWEALTH ENGINEERS, INC. ALL RIGHTS RESERVED. REPRODUCTION BY ANY METHOD IN WHOLE OR IN PART WITHOUT PERMISSION IS PROHIBITED

Know what's below. Call before you dig. 811
Know what's below. 811 before you dig.
1-800-382-5544 (IYS THE LAW)

No.	Submittal Revision	By	Date

Designed By:	Drawn By:	Checked By:
RM	BW/CH/EK	JH
Issue Date: 8/2025	Project No: S21082	Scale: AS SHOWN

MAINTENANCE OF TRAFFIC - PHASE 4

Drawing No: MOT8

Sheet: 119 OF 137

File: Z:\SHARED\IN CLIENTS A-L\KOKOMO\S21082 NORTH SIDE INTERCEPTOR DESIGN\06 CAD\A CURRENT FILES\1 DRAWINGS\05 - S21082 - MOT PLAN.DWG
Saved: 8/8/2025 11:19:54 AM Plotted: 8/8/2025 11:56:22 AM Current User: Bryce Persinger LastSavedBy: bpersinger

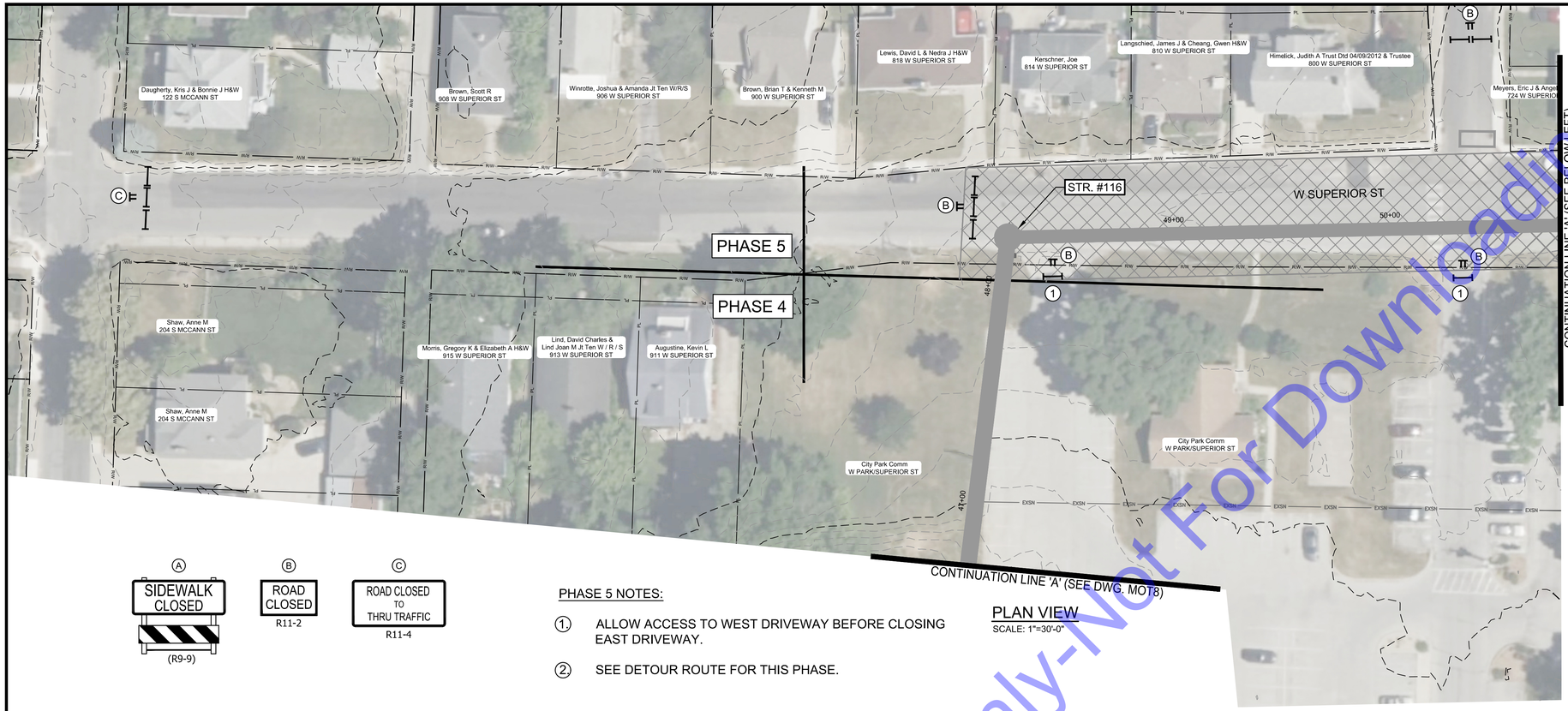

PLAN VIEW
SCALE: 1"=30'-0"

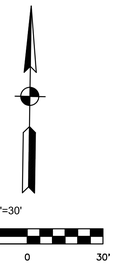

Ⓐ SIDEWALK CLOSED (R9-9)

Ⓑ ROAD CLOSED R11-2

Ⓒ ROAD CLOSED TO THRU TRAFFIC R11-4

PHASE 5 NOTES:

① ALLOW ACCESS TO WEST DRIVEWAY BEFORE CLOSING EAST DRIVEWAY.

② SEE DETOUR ROUTE FOR THIS PHASE.

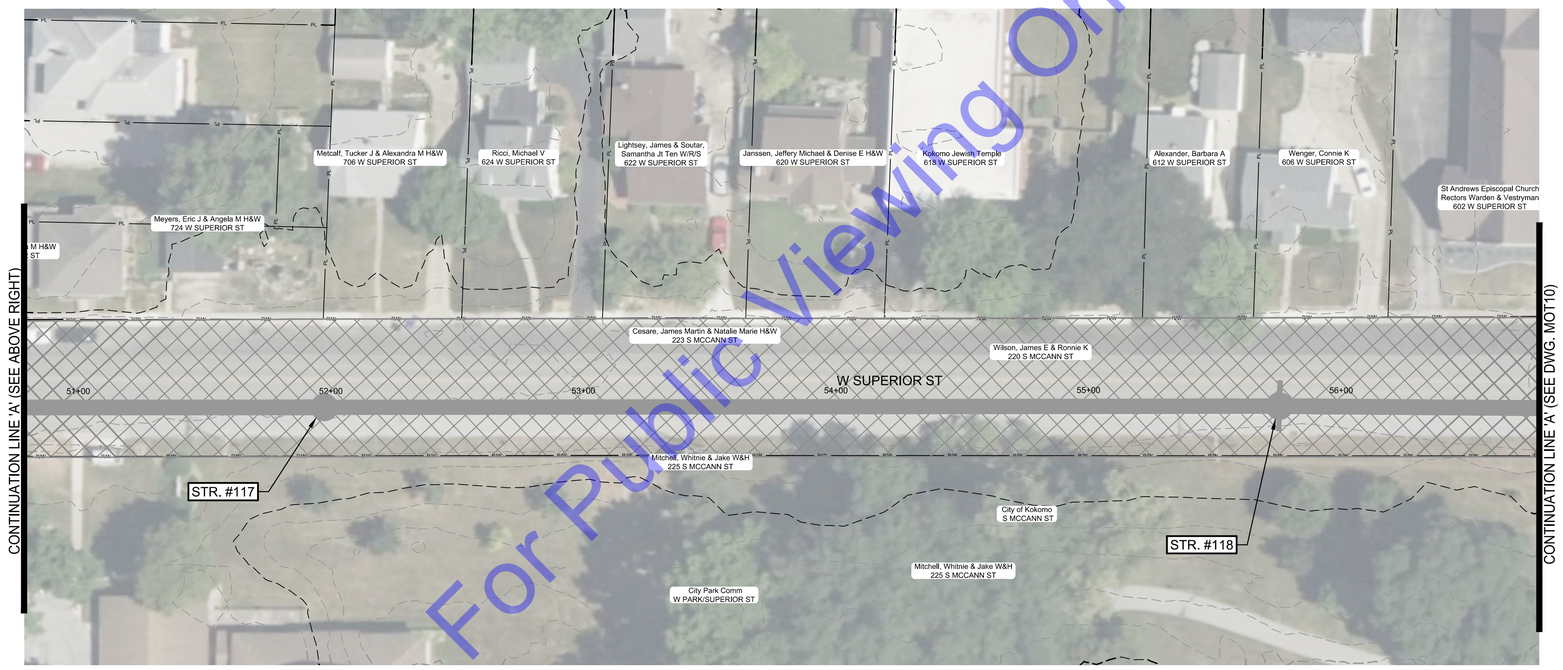

PLAN VIEW
SCALE: 1"=30'-0"

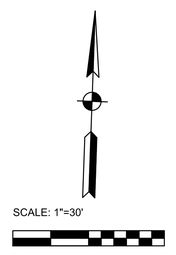

GENERAL MOT PHASING NOTES:

1. OPEN ROAD SEGMENTS, AS POSSIBLE, TO ALLOW PROPERTY OWNER'S ACCESS.
2. EACH PHASE SHALL BE COMPLETED ENOUGH TO ALLOW TRAFFIC USE PRIOR TO STARTING A NEW PHASE UNLESS EXPRESSLY APPROVED BY THE CITY.
3. SIDEWALK CLOSURES DEPICTED HEREIN MAY NOT BE NEEDED FOR THE DURATION OF THE PHASE SHOWN. IN GENERAL, SIDEWALKS SHOULD BE CLOSED WHEN PEDESTRIAN TRAFFIC WILL BE WITHIN 20 FEET OF THE EXCAVATION OR WHERE CROSSING WILL RESULT IN BEING WITHIN 20 FEET OF THE EXCAVATION.
4. PHASE LINES ARE NOT INTENDED TO BE EXACT LOCATIONS, BUT TO DEPICT NECESSARY TRAFFIC ALLOWANCES. CONTRACTORS MAY ADJUST LOCATION WHILE MAINTAINING ACCESS SHOWN.

GENERAL NOTES:

1. ALL SIGNS, BARRICADES, AND OTHER TRAFFIC CONTROL DEVICES SHALL BE PLACED IN ACCORDANCE WITH THE LATEST ADDITION OF THE INDIANA MUTCD AND INDOT STANDARDS.
2. CONTRACTOR IS RESPONSIBLE FOR PROPER IMPLEMENTATION AND MAINTENANCE OF THE TRAFFIC CONTROL PLAN.
3. MAINTAIN ACCESS TO RESIDENCES AT ALL TIMES AND COORDINATE CLOSURE WITH RESIDENT.
4. DRIVEWAYS AND SIDEWALKS WILL NEED TO BE CLOSED FOR THIS WORK. CLOSELY SPACED DRUMS OR SIMILAR DEVICES SHOULD BE USED FOR THIS. ACCESS TO BUSINESSES AND RESIDENCES MUST BE MAINTAINED AT ALL TIMES, OR CLOSURES COORDINATED WITH LANDOWNER(S).
5. CONTRACTOR IS REQUIRED TO COORDINATE ROADWAY CLOSURES WITH THE LOCAL FIRE DEPARTMENT PRIOR TO IMPLEMENTATION.

LEGEND:

- TYPE III BARRICADE
- CONSTRUCTION SIGN
- TRAFFIC FLOW
- WORK ZONE
- EASEMENT LIMITS FOR WORK ZONE
- CONCRETE WALL (TCB)
- DRUMS
- SNOW FENCING WITH CAUTION TAPE (OR SIMILAR DEVICE TO INDICATE WORK ZONE TO PROTECT PUBLIC AND RESTRICT ACCESS)

For Public Viewing Only-Not For Downloading

COMMONWEALTH ENGINEERS, INC.
A wealth of resources to master a common goal.
https://commonwealthengineers.com/

ROBIN LYNN MATHEWS
REGISTERED
PE10100897
STATE OF INDIANA
PROFESSIONAL ENGINEER
Signature 8/15/2025 Date

CITY OF KOKOMO, INDIANA
HOWARD COUNTY

NORTH SIDE INTERCEPTOR
IMPROVEMENTS PROJECT

© 2025 BY COMMONWEALTH ENGINEERS, INC. ALL RIGHTS RESERVED. REPRODUCTION BY ANY METHOD IN WHOLE OR IN PART WITHOUT PERMISSION IS PROHIBITED

Know what's below. Call before you dig.
Know what's below. 811 before you dig.
1-800-382-5544 (ITS THE LAW)

No.	Submittal / Revision	By	Date

Designed By:	Drawn By:	Checked By:
RM	BW/CH/EK	JH
Issue Date: 8/2025	Project No: S21082	Scale: AS SHOWN

MAINTENANCE OF TRAFFIC - PHASE 5

Drawing No:
MOT9
Sheet: 120 OF 137

File: Z:\SHARED\IN CLIENTS A-L\KOKOMO\S21082 NORTH SIDE INTERCEPTOR DESIGN\06 CAD\A CURRENT FILES\1 DRAWINGS\05 - S21082 - MOT PLAN.DWG
Saved: 8/8/2025 11:19:54 AM Plotted: 8/8/2025 11:58:03 AM Current User: Bryce Persinger LastSavedBy: bpersinger

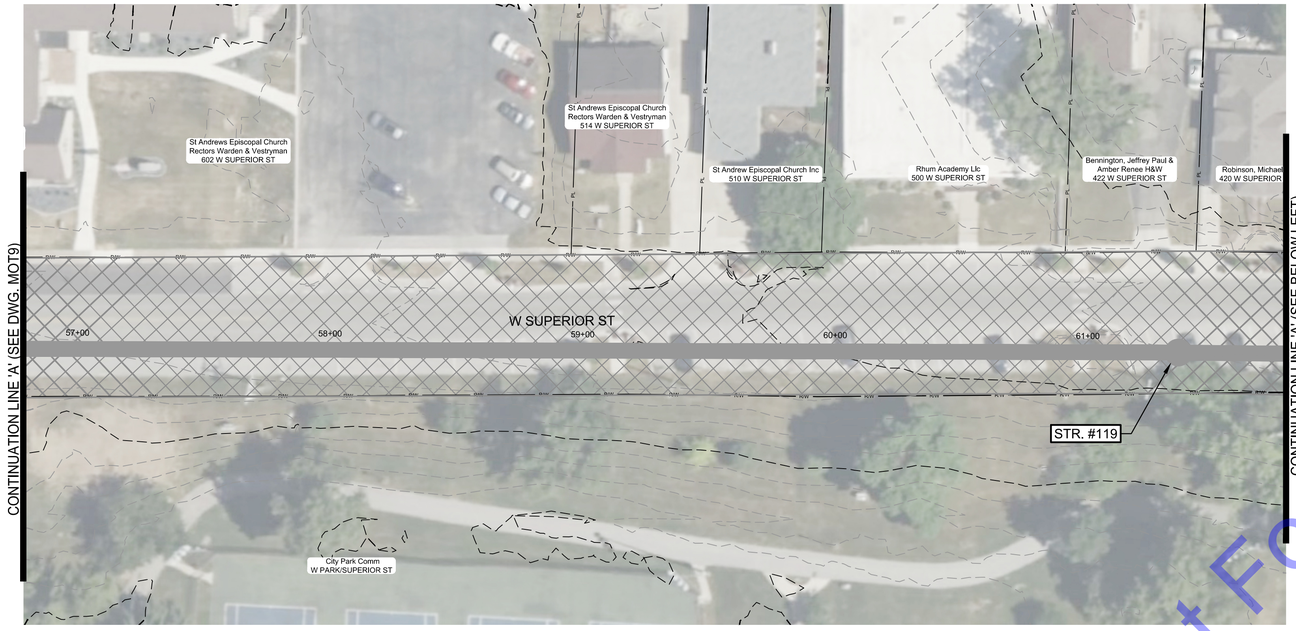

PLAN VIEW
SCALE: 1"=30'-0"

SCALE: 1"=30'
30' 0 30'



PLAN VIEW
SCALE: 1"=30'-0"

DIRECT THRU TRAFFIC TO RIGHT TURN LANE THROUGH THE USE OF DRUMS. ALLOW ACCESS TO LEFT TURN LANE.

CLOSE ACCESS TO LEFT TURN LANE. COVER LEFT TURN SIGNAL HEADS OR OTHERWISE MAKE PHASE INOPERABLE.

GENERAL MOT PHASING NOTES:

1. OPEN ROAD SEGMENTS, AS POSSIBLE, TO ALLOW PROPERTY OWNER'S ACCESS.
2. EACH PHASE SHALL BE COMPLETED ENOUGH TO ALLOW TRAFFIC USE PRIOR TO STARTING A NEW PHASE UNLESS EXPRESSLY APPROVED BY THE CITY.
3. SIDEWALK CLOSURES DEPICTED HEREIN MAY NOT BE NEEDED FOR THE DURATION OF THE PHASE SHOWN. IN GENERAL, SIDEWALKS SHOULD BE CLOSED WHEN PEDESTRIAN TRAFFIC WILL BE WITHIN 20 FEET OF THE EXCAVATION OR WHERE CROSSING WILL RESULT IN BEING WITHIN 20 FEET OF THE EXCAVATION.
4. PHASE LINES ARE NOT INTENDED TO BE EXACT LOCATIONS, BUT TO DEPICT NECESSARY TRAFFIC ALLOWANCES. CONTRACTORS MAY ADJUST LOCATION WHILE MAINTAINING ACCESS SHOWN.

GENERAL NOTES:

1. ALL SIGNS, BARRICADES, AND OTHER TRAFFIC CONTROL DEVICES SHALL BE PLACED IN ACCORDANCE WITH THE LATEST ADDITION OF THE INDIANA MUTCD AND INDOT STANDARDS.
2. CONTRACTOR IS RESPONSIBLE FOR PROPER IMPLEMENTATION AND MAINTENANCE OF THE TRAFFIC CONTROL PLAN.
3. MAINTAIN ACCESS TO RESIDENCES AT ALL TIMES AND COORDINATE CLOSURE WITH RESIDENT.
4. DRIVEWAYS AND SIDEWALKS WILL NEED TO BE CLOSED FOR THIS WORK. CLOSELY SPACED DRUMS OR SIMILAR DEVICES SHOULD BE USED OR THIS. ACCESS TO BUSINESSES AND RESIDENCES MUST BE MAINTAINED AT ALL TIMES, OR CLOSURES COORDINATED WITH LANDOWNER(S).
5. CONTRACTOR IS REQUIRED TO COORDINATE ROADWAY CLOSURES WITH THE LOCAL FIRE DEPARTMENT PRIOR TO IMPLEMENTATION.

LEGEND:

- TYPE III BARRICADE
- CONSTRUCTION SIGN
- TRAFFIC FLOW
- WORK ZONE
- EASEMENT LIMITS FOR WORK ZONE
- CONCRETE WALL (TCB)
- DRUMS
- SNOW FENCING WITH CAUTION TAPE (OR SIMILAR DEVICE TO INDICATE WORK ZONE TO PROTECT PUBLIC AND RESTRICT ACCESS)

Ⓐ SIDEWALK CLOSED (R9-9)

Ⓑ ROAD CLOSED R11-2

Ⓒ ROAD CLOSED TO THRU TRAFFIC R11-4

PHASE 5 NOTES:

1. ALLOW ACCESS TO WEST DRIVEWAY BEFORE CLOSING EAST DRIVEWAY.
2. SEE DETOUR ROUTE FOR THIS PHASE.
3. CLOSE DRIVEWAYS OFF FROM THE WORK ZONE WHEN ACCESS FROM OTHER DRIVEWAYS IS POSSIBLE.

For Public Viewing Only-Not For Downloading

COMMONWEALTH ENGINEERS, INC.
A wealth of resources to master a common goal.
https://commonwealthengineers.com/

ROBYN LYNN MATTHEWS
REGISTERED
PE10100897
STATE OF INDIANA
PROFESSIONAL ENGINEER
Signature 8/15/2025 Date

CITY OF KOKOMO, INDIANA
HOWARD COUNTY

NORTH SIDE INTERCEPTOR
IMPROVEMENTS PROJECT

© 2025 BY COMMONWEALTH ENGINEERS, INC. ALL RIGHTS RESERVED. REPRODUCTION BY ANY METHOD IN WHOLE OR IN PART WITHOUT PERMISSION IS PROHIBITED

Indiana 811 Know what's below. Call before you dig.
Know what's below. 811 before you dig.
1-800-382-5544 (ITS THE LAW)

No.	Submittal / Revision	By	Date

Designed By:	Drawn By:	Checked By:
RM	BW/CH/EK	JH
Issue Date: 8/2025	Project No: S21082	Scale: AS SHOWN

MAINTENANCE OF TRAFFIC - PHASE 5 AND PHASE 6

Drawing No: MOT10
Sheet: 121 OF 137

File: Z:\SHARED\N CLIENTS A-L\KOKOMO\S21082 NORTH SIDE INTERCEPTOR DESIGN\06 CAD\A CURRENT FILES\1 DRAWINGS\05 - S21082 - MOT PLAN.DWG
Saved: 8/8/2025 11:19:54 AM Plotted: 8/8/2025 11:59:41 AM Current User: Bryce Persinger LastSavedBy: bpersinger



DETOUR PHASE 3
NO SCALE

For Public Viewing Only-Not For Downloading

GENERAL NOTES:

1. ALL SIGNS, BARRICADES, AND OTHER TRAFFIC CONTROL DEVICES SHALL BE PLACED IN ACCORDANCE WITH THE LATEST ADDITION OF THE INDIANA MUTCD AND INDOT STANDARDS.
2. CONTRACTOR IS RESPONSIBLE FOR PROPER IMPLEMENTATION AND MAINTENANCE OF THE TRAFFIC CONTROL PLAN.
3. MAINTAIN ACCESS TO RESIDENCES AT ALL TIMES AND COORDINATE CLOSURE WITH RESIDENT.
4. DRIVEWAYS AND SIDEWALKS WILL NEED TO BE CLOSED FOR THIS WORK. CLOSELY SPACED DRUMS OR SIMILAR DEVICES SHOULD BE USED FOR THIS. ACCESS TO BUSINESSES AND RESIDENCES MUST BE MAINTAINED AT ALL TIMES, OR CLOSURES COORDINATED WITH LANDOWNER(S).
5. CONTRACTOR IS REQUIRED TO COORDINATE ROADWAY CLOSURES WITH THE LOCAL FIRE DEPARTMENT PRIOR TO IMPLEMENTATION.

PHASE 3 DETOUR NOTES:

1. DURING PHASE 3, USE THIS SPACE AS AN ALTERNATE FOR PARKING FOR BASEBALL FIELDS AND THE BRIDGE AS A PEDESTRIAN BRIDGE.

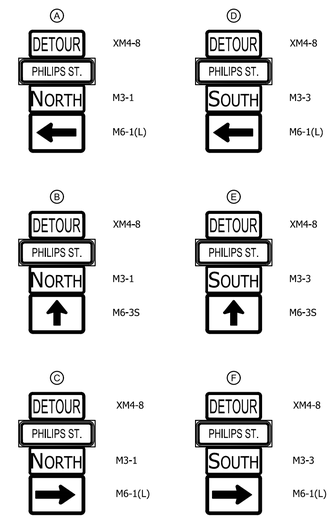

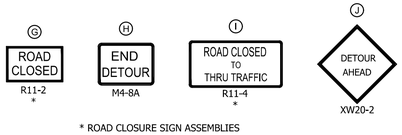

* ROAD CLOSURE SIGN ASSEMBLIES

LEGEND:

- TYPE III BARRICADE
- CONSTRUCTION SIGN
- TRAFFIC FLOW
- WORK ZONE
- DETOUR ROUTE

COMMONWEALTH ENGINEERS, INC.
A wealth of resources to master a common goal.
https://commonwealthengineers.com/

ROBIN LYNN MATHEWS
REGISTERED
PE10100897
STATE OF INDIANA
PROFESSIONAL ENGINEER

Signature 8/15/2025 Date

CITY OF KOKOMO, INDIANA
HOWARD COUNTY

NORTH SIDE INTERCEPTOR
IMPROVEMENTS PROJECT

© 2025 BY COMMONWEALTH ENGINEERS, INC. ALL RIGHTS RESERVED. REPRODUCTION BY ANY METHOD IN WHOLE OR IN PART WITHOUT PERMISSION IS PROHIBITED

Know what's below. Call before you dig. Indiana 811
Know what's below. 811 before you dig.
1-800-382-5544 (ITS THE LAW)

No.	Submittal / Revision	By	Date

Designed By:	Drawn By:	Checked By:
RM	BW/CH/EK	JH
Issue Date:	Project No:	Scale:
8/2025	S21082	AS SHOWN

MAINTENANCE OF TRAFFIC

Drawing No:
MOT11
Sheet: 122 OF 137

File: Z:\SHARED\IN CLIENTS A-L\KOKOMO\S21082 NORTH SIDE INTERCEPTOR DESIGN\06 CAD\A CURRENT FILES\1 DRAWINGS\05 - S21082 - MOT PLAN.DWG
Saved: 8/8/2025 11:19:54 AM Plotted: 8/8/2025 12:00:58 PM Current User: Bryce Persinger LastSavedBy: bpersinger



For Public Viewing Only-Not For Downloading

DETOUR PHASE 5
NO SCALE

GENERAL NOTES:

1. ALL SIGNS, BARRICADES, AND OTHER TRAFFIC CONTROL DEVICES SHALL BE PLACED IN ACCORDANCE WITH THE LATEST ADDITION OF THE INDIANA MUTCD AND INDOT STANDARDS.
2. CONTRACTOR IS RESPONSIBLE FOR PROPER IMPLEMENTATION AND MAINTENANCE OF THE TRAFFIC CONTROL PLAN.
3. MAINTAIN ACCESS TO RESIDENCES AT ALL TIMES AND COORDINATE CLOSURE WITH RESIDENT.
4. DRIVEWAYS AND SIDEWALKS WILL NEED TO BE CLOSED FOR THIS WORK. CLOSELY SPACED DRUMS OR SIMILAR DEVICES SHOULD BE USED FOR THIS. ACCESS TO BUSINESSES AND RESIDENCES MUST BE MAINTAINED AT ALL TIMES, OR CLOSURES COORDINATED WITH LANDOWNER(S).
5. CONTRACTOR IS REQUIRED TO COORDINATE ROADWAY CLOSURES WITH THE LOCAL FIRE DEPARTMENT PRIOR TO IMPLEMENTATION.

PHASE 5 DETOUR NOTES:

1. CONSTRUCTION AND USE OF THIS DETOUR IS PROHIBITED BETWEEN JUNE AND SEPTEMBER.

(A) DETOUR / SUPERIOR ST. / EAST — XM4-8, M3-2, M6-1(L)

(D) DETOUR / SUPERIOR ST. / WEST — XM4-8, M3-4, M6-1(L)

(B) DETOUR / SUPERIOR ST. / EAST — XM4-8, M3-2, M6-3S

(E) DETOUR / SUPERIOR ST. / WEST — XM4-8, M3-4, M6-3S

(C) DETOUR / SUPERIOR ST. / EAST — XM4-8, M3-2, M6-1(R)

(F) DETOUR / SUPERIOR ST. / WEST — XM4-8, M3-4, M6-1(R)

(G) ROAD CLOSED — R11-2 *

(H) END DETOUR — M4-8A

(I) ROAD CLOSED TO THRU TRAFFIC — R11-4 *

(J) DETOUR AHEAD — XW20-2

* ROAD CLOSURE SIGN ASSEMBLIES

LEGEND:

- TYPE III BARRICADE
- CONSTRUCTION SIGN
- TRAFFIC FLOW
- WORK ZONE
- DETOUR ROUTE

COMMONWEALTH ENGINEERS, INC.
A wealth of resources to master a common goal.
https://commonwealthengineers.com/

ROBIN LYNN MATHEWS
REGISTERED
PE10100897
STATE OF INDIANA
PROFESSIONAL ENGINEER

Signature 8/15/2025 Date

CITY OF KOKOMO, INDIANA
HOWARD COUNTY

NORTH SIDE INTERCEPTOR
IMPROVEMENTS PROJECT

© 2025 BY COMMONWEALTH ENGINEERS, INC. ALL RIGHTS RESERVED. REPRODUCTION BY ANY METHOD IN WHOLE OR IN PART WITHOUT PERMISSION IS PROHIBITED

Indiana 811 Know what's below. Call before you dig.
Know what's below. 811 before you dig.
1-800-382-5544 (ITS THE LAW)

No.	Submittal / Revision	By	Date

Designed By:	Drawn By:	Checked By:
RM	BW/CH/EK	JH
Issue Date:	Project No:	Scale:
8/2025	S21082	AS SHOWN

MAINTENANCE OF TRAFFIC

Drawing No:
MOT12
Sheet: 123 OF 137

File: Z:\SHARED\IN CLIENTS A-L\KOKOMO\S21082 NORTH SIDE INTERCEPTOR DESIGN\06 CAD\A CURRENT FILES\1 DRAWINGS\05 - S21082 - MOT PLAN.DWG
Saved: 8/8/2025 11:19:54 AM Plotted: 8/8/2025 12:02:14 PM Current User: Bryce Persinger LastSavedBy: bpersinger



DETOUR PHASE 6
NO SCALE

For Public Viewing Only-Not For Downloading

GENERAL NOTES:

1. ALL SIGNS, BARRICADES, AND OTHER TRAFFIC CONTROL DEVICES SHALL BE PLACED IN ACCORDANCE WITH THE LATEST ADDITION OF THE INDIANA MUTCD AND INDOT STANDARDS.
2. CONTRACTOR IS RESPONSIBLE FOR PROPER IMPLEMENTATION AND MAINTENANCE OF THE TRAFFIC CONTROL PLAN.
3. MAINTAIN ACCESS TO RESIDENCES AT ALL TIMES AND COORDINATE CLOSURE WITH RESIDENT.
4. DRIVEWAYS AND SIDEWALKS WILL NEED TO BE CLOSED FOR THIS WORK. CLOSELY SPACED DRUMS OR SIMILAR DEVICES SHOULD BE USED FOR THIS. ACCESS TO BUSINESSES AND RESIDENCES MUST BE MAINTAINED AT ALL TIMES, OR CLOSURES COORDINATED WITH LANDOWNER(S).
5. CONTRACTOR IS REQUIRED TO COORDINATE ROADWAY CLOSURES WITH THE LOCAL FIRE DEPARTMENT PRIOR TO IMPLEMENTATION.

PHASE 6 DETOUR NOTES:

1. CONSTRUCTION AND USE OF THIS DETOUR IS PROHIBITED BETWEEN JUNE AND SEPTEMBER.
2. TRAFFIC SIGNAL SHALL BE NON-FUNCTIONING WHEN ALL 4 APPROACHES TO THE INTERSECTION OF WASHINGTON STREET AND SUPERIOR STREET ARE CLOSED.

(A) DETOUR / WASHINGTON ST / NORTH — XM4-8, M3-1, M6-1(L)

(D) DETOUR / WASHINGTON ST / SOUTH — XM4-8, M3-3, M6-1(L)

(B) DETOUR / WASHINGTON ST / NORTH — XM4-8, M3-1, M6-3S

(E) DETOUR / WASHINGTON ST / SOUTH — XM4-8, M3-3, M6-3S

(C) DETOUR / WASHINGTON ST / NORTH — XM4-8, M3-1, M6-1(R)

(F) DETOUR / WASHINGTON ST / SOUTH — XM4-8, M3-3, M6-1(R)

(G) ROAD CLOSED — R11-2 *

(H) END DETOUR — M4-8A

(I) ROAD CLOSED TO THRU TRAFFIC — R11-4 *

(J) DETOUR AHEAD — XW20-2

* ROAD CLOSURE SIGN ASSEMBLIES

LEGEND:

- TYPE III BARRICADE
- CONSTRUCTION SIGN
- TRAFFIC FLOW
- WORK ZONE
- DETOUR ROUTE

COMMONWEALTH ENGINEERS, INC.
A wealth of resources to master a common goal.
https://commonwealthengineers.com/

ROBIN LYNN MATHEWS
REGISTERED
PE10100897
STATE OF INDIANA
PROFESSIONAL ENGINEER
Signature 8/15/2025 Date

CITY OF KOKOMO, INDIANA
HOWARD COUNTY

NORTH SIDE INTERCEPTOR
IMPROVEMENTS PROJECT

© 2025 BY COMMONWEALTH ENGINEERS, INC. ALL RIGHTS RESERVED. REPRODUCTION BY ANY METHOD IN WHOLE OR IN PART WITHOUT PERMISSION IS PROHIBITED

Indiana 811 — Know what's below. Call before you dig. 1-800-382-5544 (ITS THE LAW)

No.	Submittal / Revision	By	Date

Designed By:	Drawn By:	Checked By:
RM	BW/CH/EK	JH
Issue Date: 8/2025	Project No: S21082	Scale: AS SHOWN

MAINTENANCE OF TRAFFIC

Drawing No: MOT13

Sheet: 124 OF 137

File: Z:\SHARED\IN CLIENTS A-L\KOKOMO\S21082 NORTH SIDE INTERCEPTOR DESIGN\06 CAD\A CURRENT FILES\1 DRAWINGS\05 - S21082 - MOT PLAN.DWG
Saved: 8/15/2025 1:48:40 PM Plotted: 8/18/2025 9:01:22 AM Current User: Brian Waterman LastSavedBy: bwaterman

For Public Viewing Only Not For Downloading

GENERAL

1. The structure has been designed for the in-service loads only. The methods, procedures, and sequences of construction are the responsibility of the Contractor. Supporting formwork for the concrete construction shall not be removed before the concrete has gained sufficient strength to safely support the dead and superimposed loads which will be subsequently applied. The Contractor shall take all necessary precautions to maintain and ensure the integrity of the structure at all stages of construction.
2. All work shall be performed in accordance with the Indiana Building Code, 2014 Edition (2012 International Building Code, first printing, with Indiana Amendments).
3. Where new work is to be fitted to old work, the Contractor shall check all dimensions and conditions in the field, and report any errors or discrepancies to the Structural Engineer prior to the fabrication and erection of any new members.
4. Do not determine dimensions by "scaling" off the plans. The Contractor shall accept all risk associated with "scaling" and shall be responsible for all inadequate work resulting therefrom. Questions regarding missing or conflicting dimensions shall be directed, in writing, to the Structural Engineer.
5. Existing materials to be removed and reinstalled as part of this contract, but become damaged, shall be replaced with approved new material of equivalent quality and appearance at the Contractor's expense.
6. All work shall be performed without damage to adjacent retained work. Adequate protection of areas nearby work against dust, dirt and debris accumulation shall be maintained at all times.
7. Principal openings in the structure are indicated on the structural drawings. Refer to the architectural, mechanical, electrical, and plumbing drawings for sleeves, curbs, inserts, etc. not herein indicated. Openings in slabs with a maximum side dimension or diameter of 10 inches or less shall not require additional framing or reinforcement, unless noted otherwise. The location of sleeves or openings not shown in structural members shall be approved by the Structural Engineer.
8. The location of sleeves or openings not shown in structural members shall be approved by the Structural Engineer.
9. The Contractor shall relocate all mechanical piping, ducts, equipment, electrical conduits, wiring and plumbing that interfere with the proposed construction. Service shall be maintained to all equipment that is served by mechanical, electrical or plumbing conduit being relocated.
10. The Contractor shall relocate all utilities which interfere with the proposed construction. Service shall be maintained at all times during utility relocation unless otherwise noted.

FOUNDATIONS

1. Exterior footings shall bear "see shown on plan" minimum below finish grade and shall bear on undisturbed soil.
2. Foundation excavation and all other soils related work shall be performed in accordance with the geotechnical engineering report prepared by SME Project No. 087521.03 dated March 12, 2025 and all associated supplements.
3. Foundation and soils related work shall be performed under the direct supervision of a qualified Geotechnical Engineer.
4. Foundation excavations shall be made to plan elevations. The soil conditions beneath foundations shall then be inspected by a qualified Geotechnical Engineer. If the underlying soils are found to be unacceptable, one of the following procedures shall be followed:
   A. Remove the unacceptable soil and backfill with an engineered structural fill in accordance with the geotechnical engineering report or inspecting Geotechnical Engineer.
   B. Lower the footing to an acceptable soil. Contact the Structural Engineer for potential modifications to the foundation system.
5. Subgrade structural elements subjected to differential lateral soil pressure shall be adequately braced until the structural elements which provide lateral restraint have been placed and allowed to cure for a minimum of 7 days.
6. Excavations for spread footings, combined footings, continuous footings and/or mat foundations shall be cleaned and hand tamped to a uniform surface. Foundation excavations shall be adequately protected against detrimental change in condition from disturbance, rain, freezing, etc. Surface runoff shall not be allowed to enter the excavation.
7. Foundation conditions noted during construction, which differ from those described in the geotechnical report shall be reported to the Structural Engineer and Geotechnical Engineer before further construction is attempted.

CONCRETE

1. Reinforced concrete has been designed in accordance with the latest editions of the Building Code Requirements for Reinforced Concrete (ACI 318) and Environmental Engineering Concrete Structures (ACI 350R) by the American Concrete Institute (ACI).
2. Slabs-on-grade shall be constructed in accordance with the latest edition of the Guide for Concrete Floor and Slab Construction (ACI 302.1R).
3. Mixing, transporting, and placing of concrete shall conform to the latest edition of the Standard Practice for Selecting Proportions for Normal, Heavyweight, and Mass Concrete (ACI 211.1) and the Standard Specifications for Structural Concrete (ACI 301). The special provisions of ACI 211.1 Appendix 5 (Mass Concrete Mix Proportioning) shall be used in proportioning the concrete mixture for the mat foundation to control temperature rise during hydration. In addition, the provisions of ACI 207.1R (Mass Concrete) shall apply. Concrete curing shall conform to the latest editions of the Standard Practice for Concrete Curing (ACI 308) and the Standard Specification for Curing Concrete (ACI 308.1). In case of a discrepancy, the plans and specifications shall govern.
4. Unless noted otherwise, concrete shall have natural sand fine aggregate and normal weight coarse aggregates conforming to ASTM C33, and Type I or III Portland Cement conforming to ASTM C150. Type III Portland Cement shall not be used in mass concrete. The Contractor shall submit a mix design for each proposed class of concrete. Mix designs shall indicate proportions by weight, water-cement ratio, slump, air content, synthetic fiber size and quantity, sieve analyses of fine and coarse aggregates, standard deviation analysis, and required average strength and documentation of average strength verifying compliance with ACI 318. The Contractor shall not vary from the mix design without approval from the Structural Engineer.
5. Unless noted otherwise, fly ash may be used as a pozzolan to replace a portion of the Portland Cement in a concrete mix. Fly ash, when used, shall conform to ASTM C618, Type C (except in mass concrete, ASTM C618, Type F shall be used). Concrete mixes using fly ash shall be proportioned to account for the properties of the specific fly ash used and to account for the specific properties of the fly ash concrete thus resulting. The ratio of the amount of the fly ash to the total amount of fly ash plus cement in the mix shall not exceed 20 percent.
6. Water-reducing admixtures conforming to ASTM C494 may be used in the concrete mix design. Maximum slump shall be 5 inches for mixes containing water-reducing admixtures and 5 to 8 inches for mixes containing high range water-reducing admixtures.
7. Concrete compressive strength tests shall be performed in accordance with ASTM C39. Copies of the test results shall be forwarded to the Structural Engineer. One set of specimens shall be taken for each day's pour of appreciable size and for each 50 cubic yards (100 cubic yards for mass concrete) in accordance with the latest edition of ASTM C31. Each set shall include one specimen tested at 7 days, 2 specimens tested at 28 days and one specimen retained in reserve. Two additional reserve specimens shall be retained for all mass concrete pours. These test cylinders shall be laboratory cured. For mass concrete pours, these test cylinders shall remain on-site for 48 hours before being transported to the testing lab.
8. When the ambient temperature is expected to fall below 40 degrees during the course of a concrete pour or subsequent curing period, it shall be placed and cured in accordance with the latest edition of Cold Weather Concreting (ACI 306R) and an additional set of concrete test cylinders shall be made. For mass concrete, this set of additional test cylinders shall consist of four specimens for each 200 cubic yards of concrete placed. These cylinders shall be stored immediately adjacent to, and cured under the same conditions as the building concrete. Special curing boxes are not permitted for these test cylinders.
9. Concrete mixed, transported, placed, and cured under conditions of high ambient temperature, low humidity, solar radiation, or high winds shall conform to the latest edition of Hot Weather Concreting (ACI 305R) and an additional set of concrete test cylinders shall be made. For mass concrete, this set of additional test cylinders shall consist of four specimens for each 200 cubic yards of concrete placed. These cylinders shall be stored immediately adjacent to, and cured under the same conditions as the building concrete. Special curing boxes are not permitted for these test cylinders.
10. Slump tests shall be made prior to and following the addition of plasticizers. Where concrete is placed by pumping methods, concrete for test cylinders and slump tests shall be taken at the point of final placement.
11. Water shall not be added to the concrete at the job site. The Contractor is responsible for coordinating a pumpable and workable mix without the addition of water at the job site. The use of plasticizers, retardants and other additives shall be at the option of the Contractor subject to the approval of the Structural Engineer. Follow the recommendations of the manufacturer for the proper use of additives. Use of calcium chloride or other chloride bearing salts is prohibited.
12. Place concrete in a manner so as to prevent segregation of the mix. Delay floating and trowelling operations until the concrete has lost surface water sheen or all free water. Do not sprinkle free cement on the slab surface. Finishing of slab surfaces shall conform to the latest editions of ACI 302.1R and ACI 304R (Guide for Measuring, Mixing, Transporting and Placing Concrete).
13. Where an epoxy adhesive is specified for bonding plastic concrete to hardened concrete, it shall conform to the latest edition of the Standard Specification for Bonding Plastic Concrete to Hardened Concrete with a Multi-Component Epoxy Adhesive (ACI 503.2).
14. Maintain concrete in a moist condition for at least 5 days at ambient temperatures above 70 degrees, and at least 7 days at ambient temperatures above 50 degrees. Curing compounds or moisture retention covers shall be used for all non-formed surfaces. Formed surfaces shall be cured by leaving forms in place. During hot, dry weather, keep forms moist by sprinkling. When forms are removed prior to the end of the curing period, apply curing compound to the exposed surfaces.
15. All interior slabs shall receive a hard “troweled finish”. Exterior slabs, sidewalks, and stoops shall receive a “broom (or other type of slip resistant) finish”. All formed surfaces not exposed to public view shall receive a “rough form finish”, exposed surfaces shall receive a “smooth form finish”. Concrete finishes shall be as defined in ACI 301.
16. Protect finished concrete surfaces from damage, rain, hail, running water, other injurious effects.
17. Protect the concrete surface between finishing operations on hot, dry days or any time plastic shrinkage cracks could develop by using wet burlap, plastic membranes or fogging.
18. Horizontal and vertical joints are not permitted in concrete construction except where indicated.
19. Construction joints and/or contraction joints at locations other than where indicated shall be submitted to the Structural Engineer for approval.
20. Construction joints shall be prepared by roughening the contact surface in an approved manner to a full amplitude of approximately 1/4 inch leaving the contact surface clean and free of laitance.
21. Control joints shall be made in concrete slabs-on-grade at major column centerlines, at points of discontinuity, at reentrant corners, and at other locations shown on the plans.
22. Provide 3/4 inch chamfers on all exposed corners of concrete except those abutting masonry.
23. The Contractor shall verify the location of sleeves, openings, embedded items, etc. and shall ensure that they are in place prior to the placement of the concrete.
24. Earth cuts shall not be used as forms (“bank forming”) for vertical or sloping surfaces unless otherwise approved by the Structural Engineer. Where bank forming is permitted, the concrete element shall be increased at least 3 inches on all sides exposed to earth to account for possible soil contamination during concrete placement.

CONCRETE SCHEDULE

CONCRETE SCHEDULE						
CLASS	f'_c	AIR CONTENT	MIN. CEMENT: LB/CY (SACKS/CY)	MAX. WATER/ CEMENT: RATIO	CONCRETE PLACEMENT	REMARKS
A	4,500 psi	6% ± 1.5%	611 (6.5)	0.45	mat foundations, tank structural elevated slabs, beams, walls	crystalline waterproofing admixture
B	4,500 psi	6% ± 1.5%	611 (6.5)	0.40	exterior slabs-on-grade, stoops, curbs, & sidewalks exposed to de-icers	synthetic fibers (1.5 lbs/cys)

REINFORCING STEEL

1. Reinforcing bar detailing, fabricating, and placing shall conform to the latest edition of the following standards: Specifications for Structural Concrete for Buildings (ACI 301), ACI Detailing Manual (SP66). The latest editions of Concrete Reinforcing Steel Institute's Reinforcing Bar Detailing and Placing Reinforcing Bars may also be used.
2. Provide standard bar chairs, slab bolsters, spacers, etc. as required to maintain concrete protection specified. Reinforcing steel shall be tied to prevent displacement during concrete placement.
3. Reinforcement bars shall not be tack welded, welded, heated or cut unless otherwise indicated or approved by the Structural Engineer.
4. Welding of reinforcement bars, when approved by the Structural Engineer, shall conform to the latest edition of American Welding Society Standard D1.4. Electrodes for shop and field welding of reinforcement bars shall conform to ASTM A233, Class E90XX.
5. Synthetic fibers shall be used for temperature and shrinkage reinforcement in concrete slabs-on-grade. Synthetic fibers shall be virgin (non-recycled) nylon or polypropylene fibers conforming to ASTM C1116, Type III. Fibers shall be introduced into the mix at the plant in accordance with the manufacturer's recommendations. The Contractor shall submit the mix design, including the fiber size and quantity, to the Structural Engineer for approval prior to construction. The Contractor shall take adequate measures to manage any difficulty in concrete finishing associated with the use of the fibers.
6. Concrete cover over reinforcement, unless otherwise noted, shall be as specified in the latest editions of ACI 318 and ACI 350 with the most stringent requirements governing.
7. Unless noted otherwise, splicing of reinforcing bars shall conform to the latest edition of ACI 318.
8. Horizontal bars in walls, masonry bond beams, and continuous wall footings shall be bent at corners and intersections in such a way that continuity is provided through the joint. Separate corner bars of the same size and spacing as the horizontal reinforcing may be substituted for the bent portion of the continuous bars.
9. Unless noted otherwise, provide 2-#5 bars (one each face) around unframed openings and diagonally at reentrant corners of vertical height offsets in concrete walls. Place bars parallel to the sides of the opening and extend 24 inches beyond corners.
10. The Contractor shall prepare detailed working or shop drawings to enable him to fabricate, erect and construct all parts of the work in accordance with the drawings and specifications and shall submit one reproducible copy and one blue line copy to the Structural Engineer for review prior to fabrication. These shop drawings will be reviewed for design concepts only. The Contractor shall be responsible for all dimensions, accuracy, and fit of work.

CONCRETE REINFORCING STEEL LAP SPLICE SCHEDULE			
BAR SIZE	TENSION SPLICE		COMPRESSION SPLICE
	TOP BAR	OTHER	
#3	21"	16"	12"
#4	28"	24"	15"
#5	35"	30"	19"
#6	42"	36"	23"
#7	49"	42"	26"
#8	56"	48"	30"
#9	63"	57"	34"
#10	76"	66"	38"
#11	93"	72"	42"

POST-INSTALLED EXPANSION/ADHESIVE ANCHORS

1. Post-installed anchors shall only be used where specified on the Construction Documents. The Contractor shall obtain approval from the Structural Engineer prior to installing the post-installed anchors in place of missing or misplaced cast-in-placed anchors.
2. Care shall be taken in placing post-installed anchors to avoid conflicts with existing reinforcing steel.
3. Post-installed anchors shall be installed by qualified personnel in accordance with the drawings and specifications.
4. Post-installed anchors shall be installed by qualified personnel in accordance with the Manufacturer’s Printed Installation Instructions (MPII), the drawings and specifications. Installation of adhesive anchors shall be performed by personnel trained to install adhesive anchors. Contractor shall submit installer training cards with anchor package.
5. Post-installed anchors shall be HILTI type as manufactured by HILTI Fastening Systems or approved equivalent. Substitution requests must be submitted by the Contractor to the Structural Engineer for review. Provide back-up technical data that demonstrates that the substituted product is capable of achieving the equivalent performance values (minimum) of the specified products using the appropriate design procedure and/or standard(s) as required by the building code.
6. Masonry cores receiving post-installed anchors shall be filled with course grout. Grout must comply with IBC Section 2103.12 or IRC Section R609.1.1, as applicable. Alternatively, the grout must have a minimum compressive strength, when tested in accordance with ASTM C1019, equal to its specified strength, but not less than 2,000 psi. Post-installed anchors shall not be installed in a masonry mortar joints.
7. The Contractor shall inspect the masonry or concrete surface at each proposed post-installed anchor location prior to installation. If the anchor locations align with mortar joints or the masonry or concrete is honeycombed, cracked or otherwise unsound, the post-installed anchors shall be repositioned so as to be located in sound material and be in accordance with the manufacturer’s minimum spacing and edge distance requirements.
8. Adhesive anchors shall be subject to the following additional requirements:
   A. Anchors shall meet the requirements of ACI 355.2 (mechanical anchors) and ACI 355.4 (adhesive anchors).
   B. Proof loading of adhesive anchors is not required.
   C. Anchors shall not be installed in concrete cured less than 21-days
   D. Anchors shall not be installed until the concrete has reached a minimum compressive strength of 2,500 psi.
   E. Concrete temperature must be greater than 50 ˚F and less than 80 ˚F prior to installation of the anchors unless otherwise permitted by the MPII.
   F. Anchors shall be installed in holes drilled with the HILTI Hollow Drill Bit (TE-CD (SDS Plus) or TE-YD (SDS Max)) and HILTI VC 20/40 Vacuum (VC 20-U or VC 40-U). Follow the MPII for size and depth of holes required.
   G. The acceptability of certification other than the ACI/CRSI Adhesive Anchor Installer Certification shall be the responsibility of the Structural Engineer.
   H. Adhesive anchors installed in horizontal or upwardly inclined orientations to resist sustained tension loads shall be continuously inspected during installation by an inspector specially approved for that purpose by the building official. The special inspector shall furnish a report to the licensed design professional and building official that the work covered by the report has been performed and that the materials used and the installation procedures used conform to the approved contract documents and MPII.

REINFORCING STEEL EPOXY DOWEL SCHEDULE						
BAR SIZE	#3	#4	#5	#6	#7	#8
STANDED EFFECTIVE EMBED, h_{ef}	3-3/8"	4-1/2"	5-5/8"	6-3/4"	7-7/8"	9"
MINIMUM EDGE DISTANCE, c_{min}	2"	2-1/2"	3-1/8"	3-3/4"	4-3/8"	5"

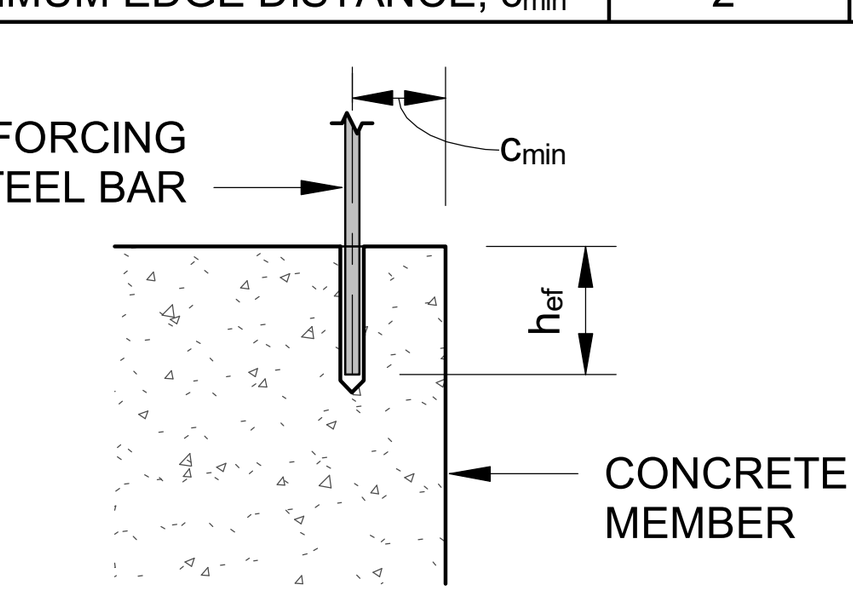

TYPICAL EPOXY DOWEL

NOTES:

1. EPOXY DOWELS SHALL UTILIZE HILTI HIT-HY 200 ADHESIVE SYSTEM OR APPROVED EQUIVALENT
2. STANDARD EMBED DEPTH AND MIN EDGE DISTANCES PROVIDED IN THIS SCHEDULE APPLY AT ALL LOCATIONS UNLESS OTHERWISE NOTED ON SECTIONS AND DETAILS.

NON-SHRINK GROUT

1. Grout shall be a high early strength, non-metallic, shrinkage resistant (when tested in accordance with the latest edition of ASTM C827 or CRD-C621), premixed, non-corrosive, non-staining product conforming to the requirements of the latest edition of ASTM C1107 and containing Portland Cement, silica sands, shrinkage compensating agents and fluidity improving compounds.
2. Grout compressive strength tests shall be performed in accordance with the latest edition of ASTM C109, with a restraining plate placed over the molds.
3. Grout shall be installed in accordance with the manufacturer's instructions.
4. Grout shall be placed in a non-sag flowable state and shall have forms built around it for confinement. Grout shall be cured according to manufacturer's recommendations.

COORDINATION WITH OTHER TRADES

1. The Contractor shall coordinate and check all dimensions relating to architectural finishes, structural framing, mechanical openings, equipment, etc. The Structural Engineer shall be notified of any discrepancies before proceeding with work in an area under question.

DESIGN

1. Building Code: Indiana Building Code, 2014 Edition (2012 International Building Code, first printing, with Indiana Amendments).
2. Soil information:

Allowable net bearing pressure:	
Mat Foundation	4000 psf
Unit weight of soil	110 pcf
Equivalent fluid pressure on tank walls	95 psf / ft
Coefficient of friction between soil and concrete footing	0.30 (assumed)

3. Concrete:

28 day compressive strength (f'c)	See Schedule

4. Reinforcing steel (deformed bars of new billet steel):

Stirrup and tie	ASTM A615, Grade 60
Weldable (Low-Alloy)	ASTM A706, Grade 60
Otherwise	ASTM A615, Grade 60
Welded wire fabric (smooth)	ASTM A185

5. Non-shrink grout:

28 day compressive strength	5,000 psi

6. Seismic loads:

Seismic importance factor, Ie	1.25
Mapped Spectral Response Acceleration at Short Periods, Ss	13.4% g
Mapped Spectral Response Acceleration at 1 Second, S1	7.5% g
Site Class	D (assumed)
Design Spectral Response Acceleration at Short Periods, Sds	14.3% g
Design Spectral Response Acceleration at 1 Second, Sd1	12.0% g
Seismic Design Category	B

7. Applied Live Loading

Structure 112, 122, 107, 108	HS-20 Truck

COMMONWEALTH ENGINEERS, INC.
A wealth of resources to master a common goal.
https://commonwealthengineers.com/
OFFICE LOCATIONS IN:
INDIANAPOLIS, IN. (2)
EVANSVILLE, IN.
FORT WAYNE, IN.
CROWN POINT, IN.
BOWLING GREEN, KY.
SOUTH BEND, IN.

JOHN DAVID TAYLOR REGISTERED No. PE19900097 STATE OF INDIANA PROFESSIONAL ENGINEER

Signature 08.19.25 Date

CE Solutions structural engineers
8770 North St., Ste. 100 Fishers, IN 46038 317.818.1912 cesolutionsinc.com

CITY OF KOKOMO, INDIANA
HOWARD COUNTY

NORTH SIDE INTERCEPTOR IMPROVEMENTS PROJECT

© 2025 BY COMMONWEALTH ENGINEERS, INC. ALL RIGHTS RESERVED. REPRODUCTION BY ANY METHOD IN WHOLE OR IN PART WITHOUT PERMISSION IS PROHIBITED

Indiana811 Know what's below. Call before you dig. 1-800-382-5544 (ITS THE LAW)

No.	Submittal / Revision	By	Date

Designed By:	Drawn By:	Checked By:
JRS	JRS	NDB
Issue Date:	Project No:	Scale:
08/19/2025	25-105	NO SCALE

GENERAL STRUCTURAL NOTES

Drawing No:
S1-1

Saved: 8/19/2025 1:19:40 PM Current Local File: C:\Users\jrstone\Documents\25-105 North Side Interceptor Imprv.v24_jrstoneQ4993.rvt

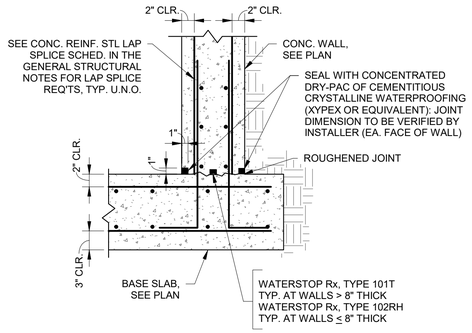

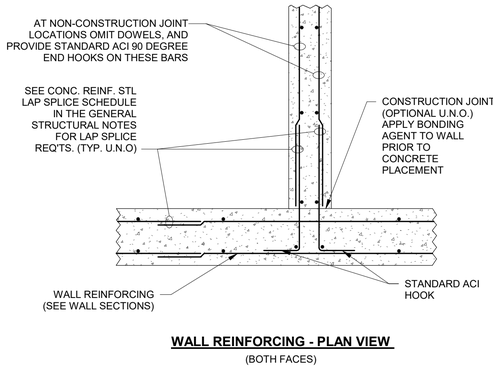

WALL REINFORCING - PLAN VIEW

(BOTH FACES)

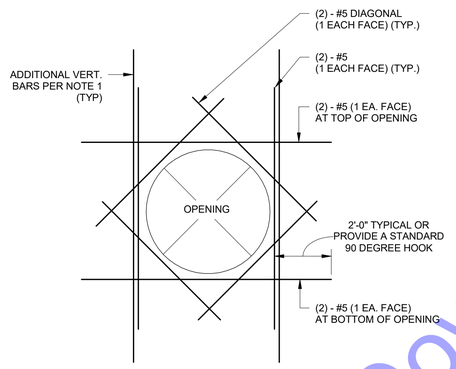

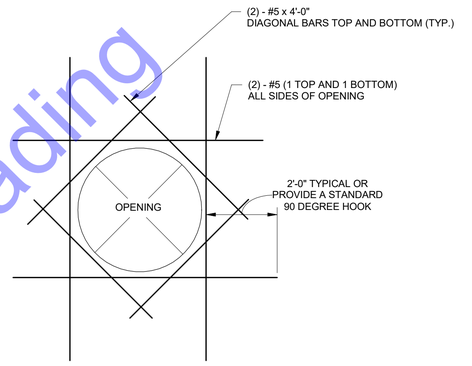

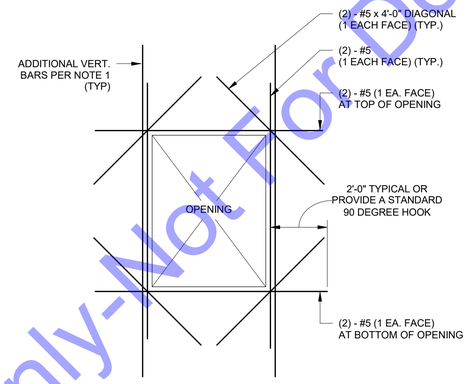

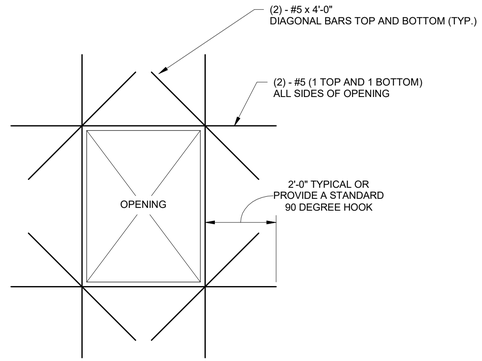

8 S1-2 TYP. WALL TO BASE SLAB

1" = 1'-0"

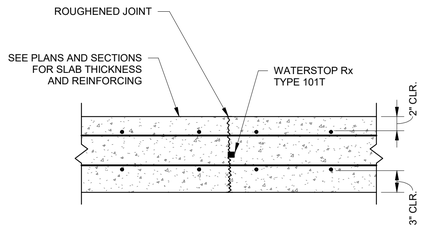

NOTES:
1. ALL REINFORCING TO BE CONTINUOUS THRU JOINT.
2. CONSTRUCTION JOINT SPACING NOT TO EXCEED 75'-0".
3. SEE SOIL REPORT FOR UNDERSLAB PREPARATION AND COMPACTION.
4. SEE GENERAL STRUCTURAL NOTES FOR LAP SPLICE REQUIREMENTS.

5 S1-2 TYP. CONC. WALL INTERSECTION

1/8" = 1'-0"

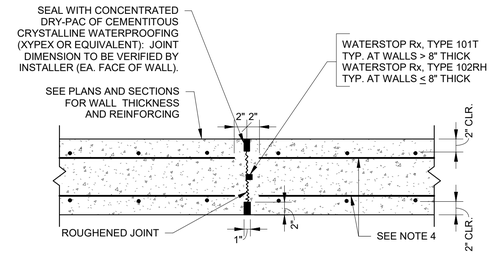

NOTES:
1. CONSTRUCTION JOINTS SHALL BE LOCATED AT JOINTS MARKED CJ.
2. WATERSTOPS AND DRY-PAC REQUIRED AT WATER RETAINING WALLS ONLY.
3. UNLESS NOTED OTHERWISE, CONSTRUCTION JOINT SPACING NOT TO EXCEED 75 FEET.
4. 50% OF THE HORIZ. REINF. STEEL SHALL BE CONTINUOUS THRU JOINT. HORIZONTAL BARS THAT STOP SHORT OF JOINT SHALL BE FABRICATED ACCORDINGLY AND SHALL NOT BE FIELD CUT. CONTINUOUS AND DISCONTINUOUS HORIZ. BARS SHALL BE ALTERNATED ALONG WALL HEIGHT.
5. SEE SPECIFIC DETAILS AT NOTED STRUCTURES WHERE 100% OF THE HORIZONTAL REINFORCING STEEL IS CONTINUOUS THRU JOINT.
6. CONSTRUCTION JOINTS SHALL NOT OCCUR WITHIN 5'-0" OF A CORNER.
7. SEE GENERAL STRUCTURAL NOTES FOR LAP SPLICE REQUIREMENTS.

NOTES:
1. WHERE VERTICAL REINFORCING IS INTERRUPTED BY THE OPENING, ONE HALF OF THE INTERRUPTED STEEL SHALL BE ADDED TO EACH SIDE OF THE OPENING. USE FULL LENGTH BARS.
2. THIS DETAIL APPLIES TO ALL OPENINGS IN CONCRETE WALLS UNLESS DETAILED OTHERWISE ON THE PLANS.

NOTES:
1. WHEREok REINFORCING IS INTERRUPTED BY THE OPENING, ONE HALF OF THE INTERRUPTED STEEL SHALL BE ADDED TO EACH SIDE OF THE OPENING. USE FULL LENGTH BARS.
2. THIS DETAIL APPLIES TO ALL OPENINGS IN CONCRETE SLABS UNLESS DETAILED OTHERWISE ON THE PLANS.

9 S1-2 TYP. BASE SLAB CONSTRUCTION JT.

1" = 1'-0"

6 S1-2 TYP. WALL CONSTRUCTION JOINT

1" = 1'-0"

3 S1-2 TYP. OPENING IN CONCRETE WALL

1/8" = 1'-0"

1 S1-2 TYP. OPENING IN CONCRETE SLAB

1/8" = 1'-0"

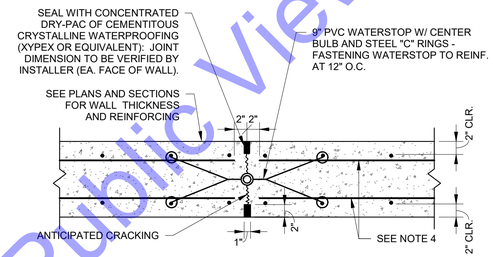

NOTES:
1. CONTRACTION JOINTS SHALL BE LOCATED AT JOINTS MARKED CT.
2. WATERSTOPS AND DRY-PAC REQUIRED AT WATER RETAINING WALLS ONLY.
3. UNLESS NOTED OTHERWISE, CONTRACTION JOINT SPACING NOT TO EXCEED 25 FEET.
4. 50% OF THE HORIZ. REINF. STEEL SHALL BE CONTINUOUS THRU JOINT. HORIZONTAL BARS THAT STOP SHORT OF JOINT SHALL BE FABRICATED ACCORDINGLY AND SHALL NOT BE FIELD CUT. CONTINUOUS AND DISCONTINUOUS HORIZ. BARS SHALL BE ALTERNATED ALONG WALL HEIGHT.
5. SEE SPECIFIC DETAILS AT NOTED STRUCTURES WHERE 100% OF THE HORIZONTAL REINFORCING STEEL IS CONTINUOUS THRU JOINT.
6. CONTRACTION JOINTS SHALL NOT OCCUR WITHIN 5'-0" OF A CORNER.
7. SEE GENERAL STRUCTURAL NOTES FOR LAP SPLICE REQUIREMENTS.

7 S1-2 TYP. WALL CONTRACTION JOINT

1" = 1'-0"

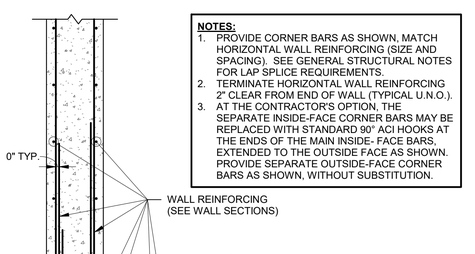

NOTES:
1. PROVIDE CORNER BARS AS SHOWN, MATCH HORIZONTAL WALL REINFORCING (SIZE AND SPACING). SEE GENERAL STRUCTURAL NOTES FOR LAP SPLICE REQUIREMENTS.
2. TERMINATE HORIZONTAL WALL REINFORCING 2" CLEAR FROM END OF WALL (TYPICAL U.N.O.).
3. AT THE CONTRACTOR'S OPTION, THE SEPARATE INSIDE-FACE CORNER BARS MAY BE REPLACED WITH STANDARD 90° ACI HOOKS AT THE ENDS OF THE MAIN INSIDE- FACE BARS, EXTENDED TO THE OUTSIDE FACE AS SHOWN. PROVIDE SEPARATE OUTSIDE-FACE CORNER BARS AS SHOWN, WITHOUT SUBSTITUTION.

WALL REINFORCING - PLAN VIEW

(BOTH FACES)

4 S1-2 TYPICAL CONCRETE WALL CORNER REINFORCEMENT - PLAN VIEW

3/4" = 1'-0"

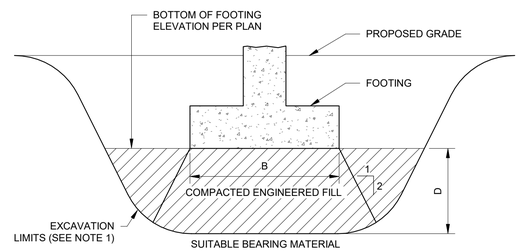

NOTES:
1. DEWATER EXCAVATION AS REQUIRED.
2. WIDTH OF EXCAVATION SHALL EQUAL WIDTH OF FOOTING PLUS DEPTH OF UNDERCUT (W=B+D).

2 S1-2 TYP. FOOTING IN UNDERCUT AREA

1" = 1'-0"

For Public Viewing Only-Not For Downloading

COMMONWEALTH ENGINEERS, INC.
A wealth of resources to master a common goal.
https://commonwealthengineers.com/
OFFICE LOCATIONS IN:
INDIANAPOLIS, IN. (2)
EVANSVILLE, IN.
FORT WAYNE, IN.
CROWN POINT, IN.
BOWLING GREEN, KY.
SOUTH BEND, IN.

JOHN DAVID TAYLOR REGISTERED No. PE19900097 STATE OF INDIANA PROFESSIONAL ENGINEER

Signature 08.19.25 Date

CE Solutions
structural engineers
317.663.3333
8888 Keystone Crossing, Suite 1300
Indianapolis, IN 46240
ceindystructural.com

CITY OF KOKOMO, INDIANA
HOWARD COUNTY

NORTH SIDE INTERCEPTOR IMPROVEMENTS PROJECT

© 2025 BY COMMONWEALTH ENGINEERS, INC. ALL RIGHTS RESERVED. REPRODUCTION BY ANY METHOD IN WHOLE OR IN PART WITHOUT PERMISSION IS PROHIBITED

IndianaMap
Know what's below. Call before you dig.
1-800-382-5544 (ITS THE LAW)

No.	Submittal / Revision	By	Date

Designed By:	Drawn By:	Checked By:
JRS	JRS	NDB
Issue Date:	Project No:	Scale:
08/19/2025	25-105	As indicated

TYPICAL STRUCTURAL DETAILS - CONCRETE

Drawing No:

S1-2

Sheet: 126 OF 137

Saved: 8/19/2025 1:19:41 PM Current Local File: C:\Users\jtstone\Documents\25-105 North Side Interceptor Imprv.v24_jrstoneD4993.rvt

NOTE:

1. TEMPORARY WALL SHORING NOT REQUIRED FOR LEAK TESTS

NOTE - BACKFILL BEHIND CONCRETE WALLS:

1. BACKFILL MAY BE PLACED THE FULL HEIGHT OF THE TANK (8' 2") BEFORE THE TOP SLAB IS IN PLACE. THE CONCRETE WALLS SHALL BE ALLOWED TO CURE AT LEAST 7 DAYS WITH A MINIMUM CONCRETE COMPRESSIVE STRENGTH OF 3,000 PSI.
2. WALL BACKFILL SHALL BE FREE DRAINING GRANULAR MATERIAL EXTENDING FROM THE BASE OF THE WALL AT A 45-DEGREE ANGLE FROM VERTICAL TO FINISHED GRADE.
3. SEE THE GEOTECHNICAL REPORT FOR BACKFILL COMPACTION REQUIREMENTS.

FOUNDATION PLAN NOTES

◯ INDICATES NOTE REFERENCED IN PLAN

1. SEE THE S1-SERIES SHEETS FOR GENERAL STRUCTURAL NOTES AND TYPICAL STRUCTURAL DETAILS.
2. GENERAL CONTRACTOR TO COORDINATE ALL OPENING, PIPE SLEEVES, EMBEDDED ITEMS, HANDRAILS, GRATING, ETC. WITH THE PROCESS DRAWINGS.
3. ALL DIMENSIONS AND ELEVATIONS SHALL BE VERIFIED PRIOR TO FABRICATION, CONSTRUCTION OR ERECTION. THE GENERAL CONTRACTOR SHALL ASSUME RESPONSIBILITY FOR ANY DISCREPANCIES.
4. SEE SITE PLAN FOR ALL FINAL GRADE ELEVATIONS.
5. SEE GEOTECHNICAL REPORT FOR ALL BACKFILLING AND COMPACTION REQUIREMENTS BEHIND WALLS AND UNDER BASE SLABS.
6. GENERAL CONTRACTOR SHALL SUBMIT A CONSTRUCTION JOINT (CJ) AND CONTRACTION JOINT (CT) LOCATION PLAN TO THE STRUCTURAL ENGINEER FOR REVIEW PRIOR TO CONCRETE PLACEMENT.
7. SEE DETAILS 6/S1-2 AND 7/S1-2 FOR WALL CONSTRUCTION JOINT AND WALL CONTRACTION JOINT REQUIREMENTS.
8. MAINTAIN STRUCTURAL SLAB THICKNESSES AT ALL FLOOR SLOPES AND DEPRESSIONS.
9. CONTRACTOR SHALL CONFIRM LOCATION AND SIZE OF FLOOR HATCHES AND MANHOLE FRAMES PRIOR TO POURING CONCRETE
10. SHADED AREA REQUIRES HEAVIER REINFORCEMENT. SEE SECTION FOR ADDITIONAL INFORMATION

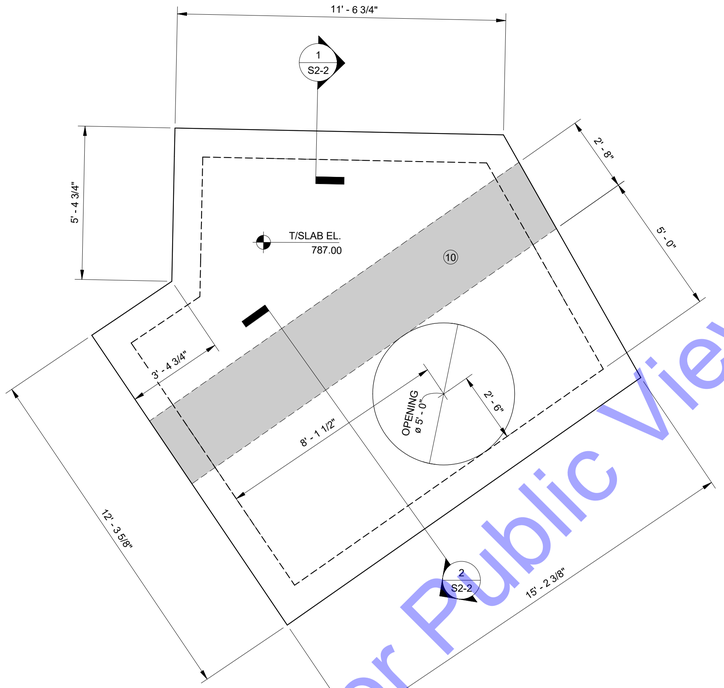

3 S2-1 STRUCTURE 112 UPPER SLAB PLAN
3/8" = 1'-0"

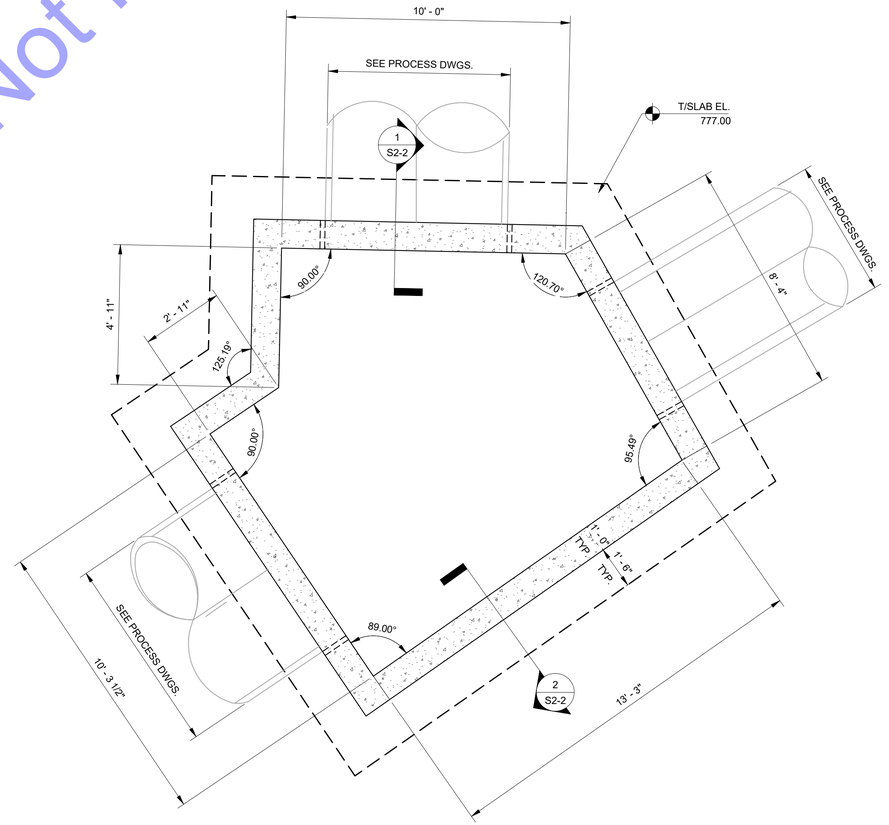

1 S2-1 STRUCTURE 112 FOUNDATION PLAN
3/8" = 1'-0"

For Public Viewing Only-Not For Downloading

COMMONWEALTH ENGINEERS, INC.
A wealth of resources to master a common goal.
https://commonwealthengineers.com/
OFFICE LOCATIONS IN:
INDIANAPOLIS, IN. (2)
EVANSVILLE, IN.
FORT WAYNE, IN.
CROWN POINT, IN.
BOWLING GREEN, KY.
SOUTH BEND, IN.

JOHN DAVID TAYLOR
REGISTERED
No. PE19900097
STATE OF INDIANA
PROFESSIONAL ENGINEER
Signature 08.19.25 Date

CE Solutions
structural engineers
317.844.1434 | 317.844.1435
9775 Crosspoint Blvd, Suite 300
Fishers, IN 46038
ceindianainc.com

CITY OF KOKOMO, INDIANA
HOWARD COUNTY

NORTH SIDE INTERCEPTOR
IMPROVEMENTS PROJECT

© 2025 BY COMMONWEALTH ENGINEERS, INC. ALL RIGHTS RESERVED. REPRODUCTION BY ANY METHOD IN WHOLE OR IN PART WITHOUT PERMISSION IS PROHIBITED

IndianaOne-Call
Know what's below. Call before you dig.
1-800-382-5544
(ITS THE LAW)

No.	Submittal / Revision	By	Date

Designed By:	Drawn By:	Checked By:
JRS	JRS	NDB
Issue Date:	Project No:	Scale:
08/19/2025	25-105	As indicated

STRUCTURE 112
FOUNDATION AND
UPPER SLAB PLAN

Drawing No:
S2-1
Sheet: 127 OF 137

Saved: 8/19/2025 1:19:41 PM Current Local File: C:\Users\jrstone\Documents\25-105 North Side Interceptor Imprv.v24_jrstone04993.rvt

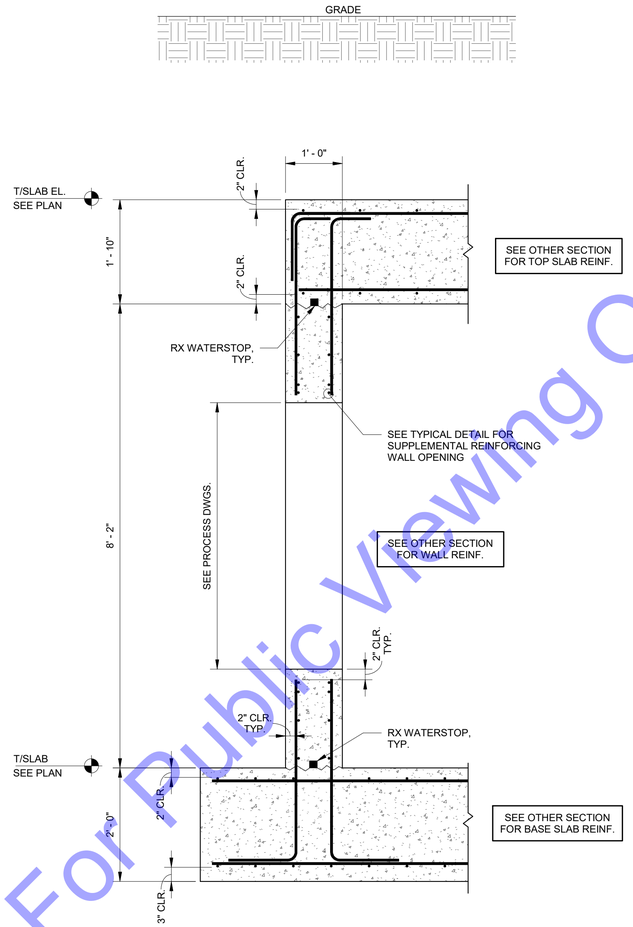

1 S2-2 SECTION
3/4" = 1'-0"

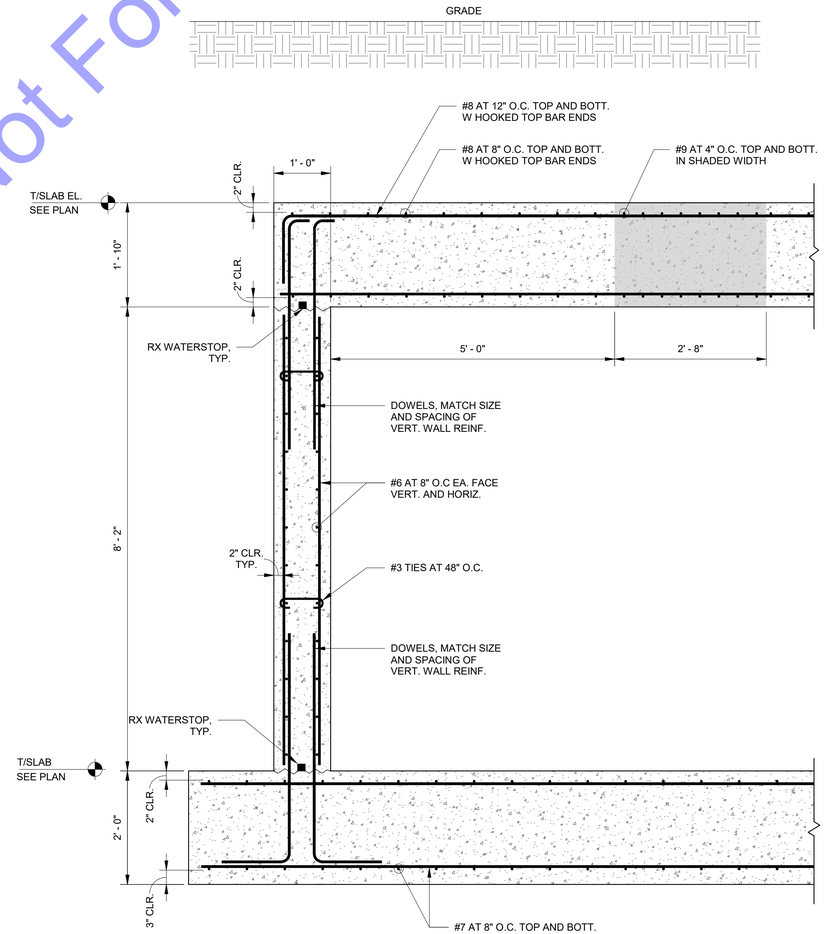

2 S2-2 SECTION
3/4" = 1'-0"

For Public Viewing Only-Not For Downloading

COMMONWEALTH ENGINEERS, INC.
A wealth of resources to master a common goal.
https://commonwealthengineers.com/
OFFICE LOCATIONS IN:
INDIANAPOLIS, IN. (2)
EVANSVILLE, IN.
FORT WAYNE, IN.
CROWN POINT, IN.
BOWLING GREEN, KY.
SOUTH BEND, IN.

JOHN DAVID TAYLOR
REGISTERED
No. PE19900097
STATE OF INDIANA
PROFESSIONAL ENGINEER

Signature 08.19.25 Date

CE Solutions
structural engineers
317.566.1313
317.566.1300
Fishers, IN 46038
ceisolutionsinc.com

CITY OF KOKOMO, INDIANA
HOWARD COUNTY

NORTH SIDE INTERCEPTOR
IMPROVEMENTS PROJECT

© 2025 BY COMMONWEALTH ENGINEERS, INC. ALL RIGHTS RESERVED. REPRODUCTION BY ANY METHOD IN WHOLE OR IN PART WITHOUT PERMISSION IS PROHIBITED

IndianaOne Call 811 Know what's below. Call before you dig.
1-800-382-5544 (ITS THE LAW)

No.	Submittal / Revision	By	Date

Designed By:	Drawn By:	Checked By:
JRS	JRS	NDB
Issue Date:	Project No:	Scale:
08/19/2025	25-105	3/4" = 1'-0"

STRUCTURE 112
UPPER LEVEL PLAN

Drawing No:
S2-2
Sheet: 128 OF 137

Saved: 8/19/2025 1:19:41 PM Current Local File: C:\Users\jrstone\Documents\25-105 North Side Interceptor Imprv.v24_jrstoneQ4993.rvt

NOTE:

1. PROVIDE TEMPORARY WALL SHORING FOR LEAK TESTING IF TOP SLAB IS NOT YET PLACED.

NOTE - BACKFILL BEHIND CONCRETE WALLS:

1. THE MAXIMUM PERMISSIBLE HEIGHT THE CONCRETE WALLS CAN BE BACKFILLED WITHOUT BRACING BEFORE THE TOP SLAB IS IN PLACE SHALL BE 15-FT. THE CONCRETE WALLS SHALL BE ALLOWED TO CURE AT LEAST 7 DAYS WITH A MINIMUM CONCRETE COMPRESSIVE STRENGTH OF 3,000 PSI.
2. THE TOP SLAB SHALL BE IN PLACE PRIOR TO FINISHING THE REST OF THE BACKFILLING BEHIND WALLS ABOVE THE 15-FT LIMIT UNLESS WALL BRACING IS PROVIDED. THE CONCRETE WALLS SHALL HAVE ATTAINED THE DESIGN MINIMUM CONCRETE COMPRESSIVE STRENGTH OF 3,000 PSI PRIOR TO FINISHING THE REST OF THE BACKFILLING ABOVE THE 15-FT LIMIT.
3. AFTER THE TOP SLAB IS IN PLACE, BACKFILL SHALL BE PLACED SIMULTANEOUSLY ON OPPOSING SIDES OF THE RESERVOIR STRUCTURE WHILE BACKFILLING.
4. WALL BACKFILL SHALL BE FREE DRAINING GRANULAR MATERIAL EXTENDING FROM THE BASE OF THE WALL AT A 45-DEGREE ANGLE FROM VERTICAL TO FINISHED GRADE.
5. SEE THE GEOTECHNICAL REPORT FOR BACKFILL COMPACTION REQUIREMENTS.

FOUNDATION PLAN NOTES

(○) INDICATES NOTE REFERENCED IN PLAN

1. SEE THE S1-SERIES SHEETS FOR GENERAL STRUCTURAL NOTES AND TYPICAL STRUCTURAL DETAILS.
2. GENERAL CONTRACTOR TO COORDINATE ALL OPENING, PIPE SLEEVES, EMBEDDED ITEMS, HANDRAILS, GRATING, ETC. WITH THE PROCESS DRAWINGS.
3. ALL DIMENSIONS AND ELEVATIONS SHALL BE VERIFIED PRIOR TO FABRICATION, CONSTRUCTION OR ERECTION. THE GENERAL CONTRACTOR SHALL ASSUME RESPONSIBILITY FOR ANY DISCREPANCIES.
4. SEE SITE PLAN FOR ALL FINAL GRADE ELEVATIONS.
5. SEE GEOTECHNICAL REPORT FOR ALL BACKFILLING AND COMPACTION REQUIREMENTS BEHIND WALLS AND UNDER BASE SLABS.
6. GENERAL CONTRACTOR SHALL SUBMIT A CONSTRUCTION JOINT (CJ) AND CONTRACTION JOINT (CT) LOCATION PLAN TO THE STRUCTURAL ENGINEER FOR REVIEW PRIOR TO CONCRETE PLACEMENT.
7. SEE DETAILS 6/S1-2 AND 7/S1-2 FOR WALL CONSTRUCTION JOINT AND WALL CONTRACTION JOINT REQUIREMENTS.
8. MAINTAIN STRUCTURAL SLAB THICKNESSES AT ALL FLOOR SLOPES AND DEPRESSIONS.
9. CONTRACTOR SHALL CONFIRM LOCATION AND SIZE OF FLOOR HATCHES AND MANHOLE FRAMES PRIOR TO POURING CONCRETE
10. (10) SHADED AREA REQUIRES HEAVIER REINFORCEMENT. SEE SECTION FOR ADDITIONAL INFORMATION

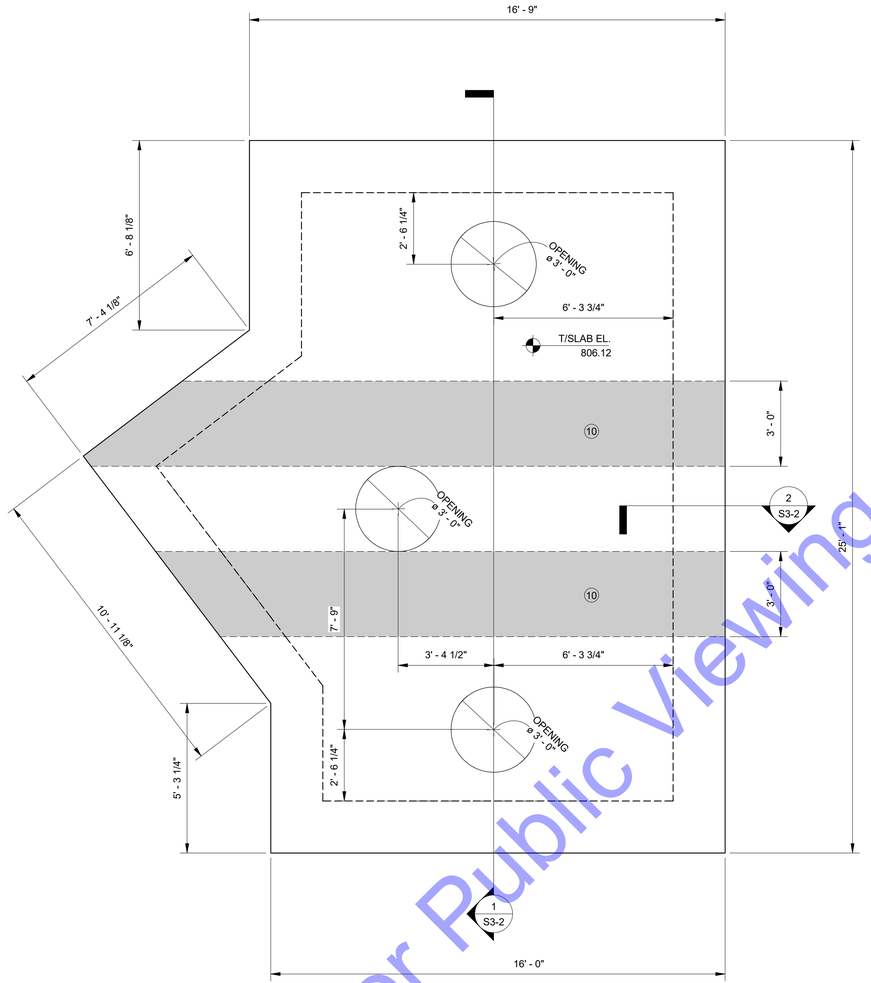

2 S3-1 STRUCTURE 121 UPPER SLAB PLAN
3/8" = 1'-0"

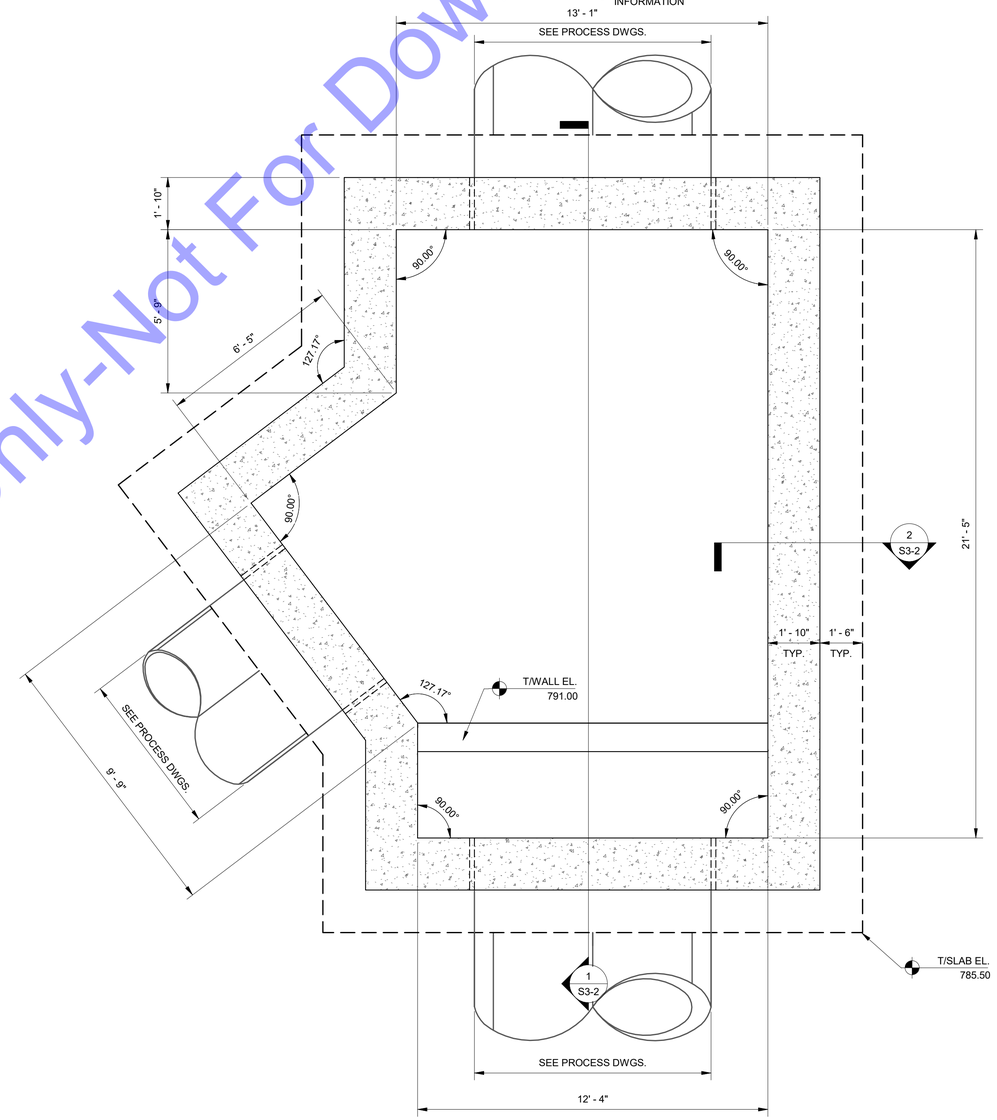

1 S3-1 STRUCTURE 121 FOUNDATION PLAN
3/8" = 1'-0"

For Public Viewing Only-Not For Download

COMMONWEALTH ENGINEERS, INC.
A wealth of resources to master a complex goal.
https://commonwealthengineers.com/
OFFICE LOCATIONS IN:
INDIANAPOLIS, IN. (2)
EVANSVILLE, IN.
FORT WAYNE, IN.
CROWN POINT, IN.
BOWLING GREEN, KY.
SOUTH BEND, IN.

JOHN DAVID TAYLOR
REGISTERED
No. PE19900097
STATE OF INDIANA
PROFESSIONAL ENGINEER
Signature 08.19.25 Date

CE Solutions
structural engineers
3777 West 131st Avenue, Suite 300
Fishers, IN 46038
317.588.5130
cesolutionsinc.com

CITY OF KOKOMO, INDIANA
HOWARD COUNTY

NORTH SIDE INTERCEPTOR
IMPROVEMENTS PROJECT

© 2025 BY COMMONWEALTH ENGINEERS, INC. ALL RIGHTS RESERVED. REPRODUCTION BY ANY METHOD IN WHOLE OR IN PART WITHOUT PERMISSION IS PROHIBITED

Indiana811 Know what's below. Call before you dig. 1-800-382-5544 (ITS THE LAW)

No.	Submittal / Revision	By	Date

Designed By:	Drawn By:	Checked By:
JRS	JRS	NDB
Issue Date:	Project No:	Scale:
08/19/2025	25-105	As indicated

STRUCTURE 121
FOUNDATION AND
UPPER SLAB PLAN

Drawing No:
S3-1
Sheet: 129 OF 137

Saved: 8/19/2025 1:19:41 PM Current Local File: C:\Users\jrstone\Documents\25-105 North Side Interceptor Imprv.v24_jrstone04983.rvt

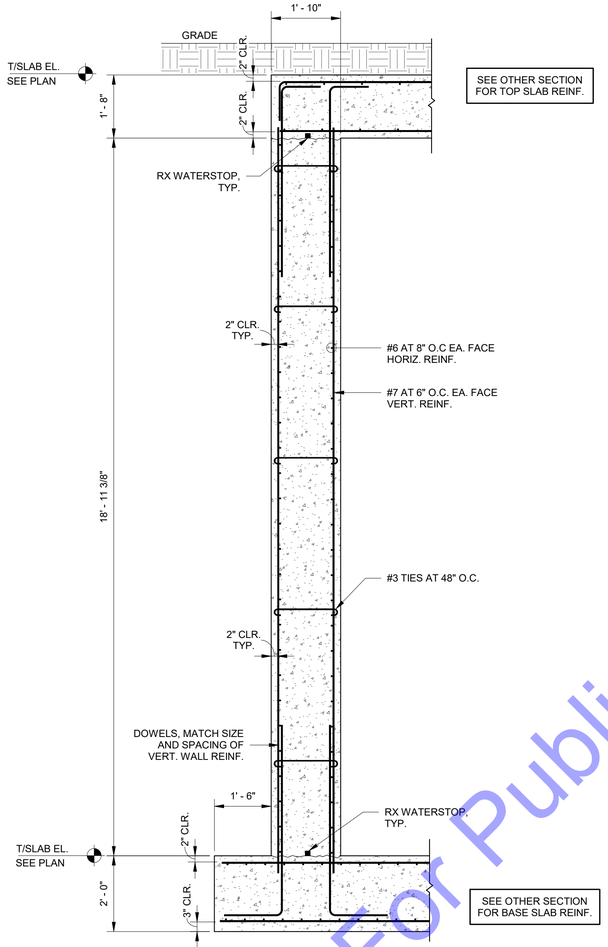

2 S3-2 SECTION
1/2" = 1'-0"

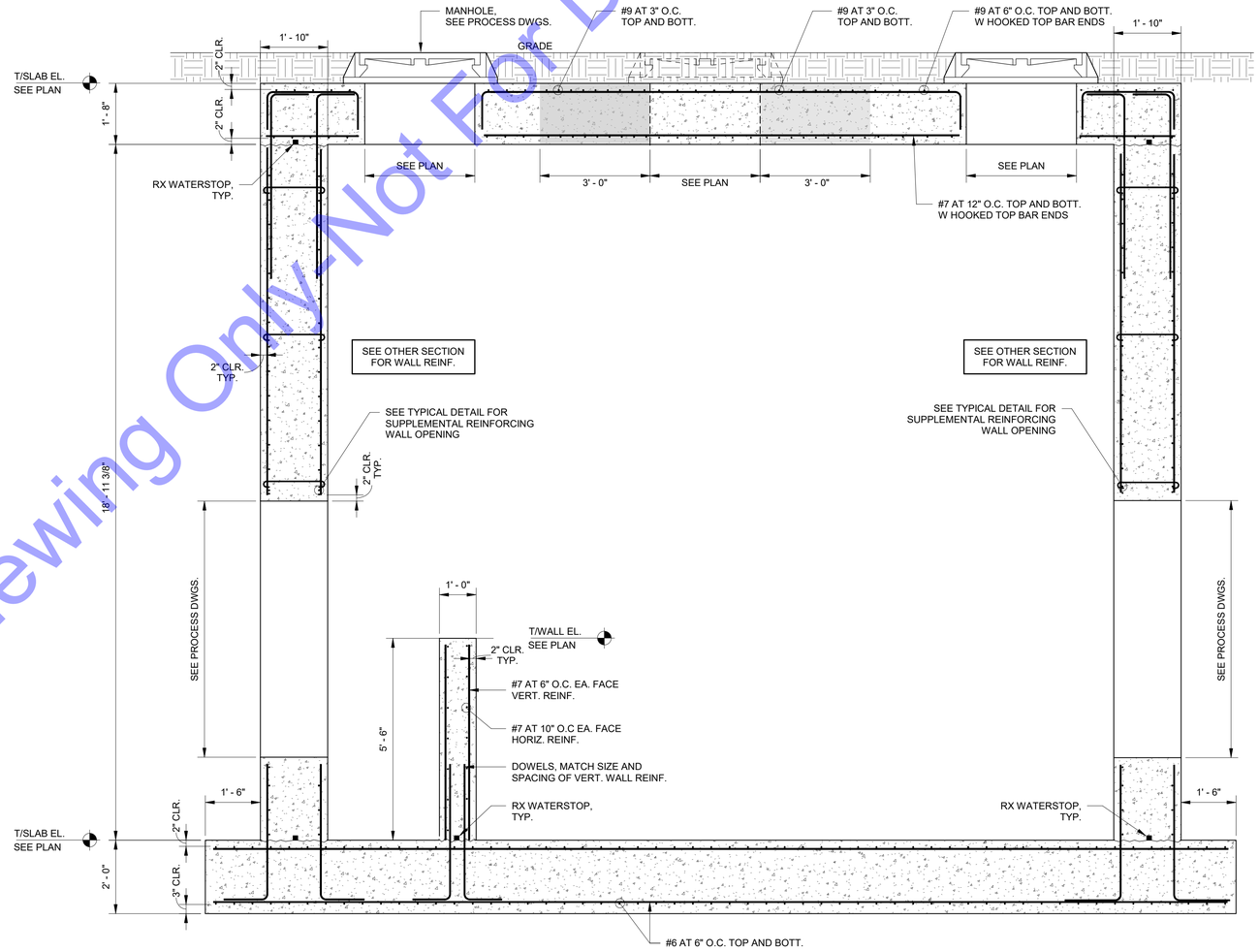

1 S3-2 SECTION
1/2" = 1'-0"

For Public Viewing Only - Not For Downloading

COMMONWEALTH ENGINEERS, INC.
A wealth of resources to master a common goal.
https://commonwealthengineers.com/
OFFICE LOCATIONS IN:
INDIANAPOLIS, IN. (2)
EVANSVILLE, IN.
FORT WAYNE, IN.
CROWN POINT, IN.
BOWLING GREEN, KY.
SOUTH BEND, IN.

JOHN DAVID TAYLOR
REGISTERED
No. PE19900097
STATE OF INDIANA
PROFESSIONAL ENGINEER

Signature 08.19.25 Date

CE Solutions
structural engineers
317.660.5555
317.660.5500
Fishers, IN 46038
ceisolutionsllc.com

CITY OF KOKOMO, INDIANA
HOWARD COUNTY

NORTH SIDE INTERCEPTOR IMPROVEMENTS PROJECT

© 2025 BY COMMONWEALTH ENGINEERS, INC. ALL RIGHTS RESERVED. REPRODUCTION BY ANY METHOD IN WHOLE OR IN PART WITHOUT PERMISSION IS PROHIBITED

IndianaOne-Call
Know what's below. Call before you dig.
1-800-382-5544
(ITS THE LAW)

No.	Submittal / Revision	By	Date

Designed By:	Drawn By:	Checked By:
JRS	JRS	NDB
Issue Date:	Project No:	Scale:
08/19/2025	25-105	1/2" = 1'-0"

STRUCTURE 121
SECTIONS AND DETAILS

Drawing No:
S3-2
Sheet: 130 OF 137

Saved: 8/19/2025 1:19:42 PM Current Local File: C:\Users\jrstone\Documents\25-105 North Side Interceptor Imprv.v24_jrstone04993.rvt

NOTE:

1. TEMPORARY WALL SHORING NOT REQUIRED FOR LEAK TESTS

NOTE - BACKFILL BEHIND CONCRETE WALLS:

1. BACKFILL MAY BE PLACED THE FULL HEIGHT OF THE TANK (9' 6") BEFORE THE TOP SLAB IS IN PLACE. THE CONCRETE WALLS SHALL BE ALLOWED TO CURE AT LEAST 7 DAYS WITH A MINIMUM CONCRETE COMPRESSIVE STRENGTH OF 3,000 PSI.
2. WALL BACKFILL SHALL BE FREE DRAINING GRANULAR MATERIAL EXTENDING FROM THE BASE OF THE WALL AT A 45-DEGREE ANGLE FROM VERTICAL TO FINISHED GRADE.
3. SEE THE GEOTECHNICAL REPORT FOR BACKFILL COMPACTION REQUIREMENTS.

FOUNDATION PLAN NOTES

◯ INDICATES NOTE REFERENCED IN PLAN

1. SEE THE S1-SERIES SHEETS FOR GENERAL STRUCTURAL NOTES AND TYPICAL STRUCTURAL DETAILS.
2. GENERAL CONTRACTOR TO COORDINATE ALL OPENING, PIPE SLEEVES, EMBEDDED ITEMS, HANDRAILS, GRATING, ETC. WITH THE PROCESS DRAWINGS.
3. ALL DIMENSIONS AND ELEVATIONS SHALL BE VERIFIED PRIOR TO FABRICATION, CONSTRUCTION OR ERECTION. THE GENERAL CONTRACTOR SHALL ASSUME RESPONSIBILITY FOR ANY DISCREPANCIES.
4. SEE SITE PLAN FOR ALL FINAL GRADE ELEVATIONS.
5. SEE GEOTECHNICAL REPORT FOR ALL BACKFILLING AND COMPACTION REQUIREMENTS BEHIND WALLS AND UNDER BASE SLABS.
6. GENERAL CONTRACTOR SHALL SUBMIT A CONSTRUCTION JOINT (CJ) AND CONTRACTION JOINT (CT) LOCATION PLAN TO THE STRUCTURAL ENGINEER FOR REVIEW PRIOR TO CONCRETE PLACEMENT.
7. SEE DETAILS 6/S1-2 AND 7/S1-2 FOR WALL CONSTRUCTION JOINT AND WALL CONTRACTION JOINT REQUIREMENTS.
8. MAINTAIN STRUCTURAL SLAB THICKNESSES AT ALL FLOOR SLOPES AND DEPRESSIONS.
9. CONTRACTOR SHALL CONFIRM LOCATION AND SIZE OF FLOOR HATCHES AND MANHOLE FRAMES PRIOR TO POURING CONCRETE
10. ⑩ SHADED AREA REQUIRES HEAVIER REINFORCEMENT. SEE SECTION FOR ADDITIONAL INFORMATION

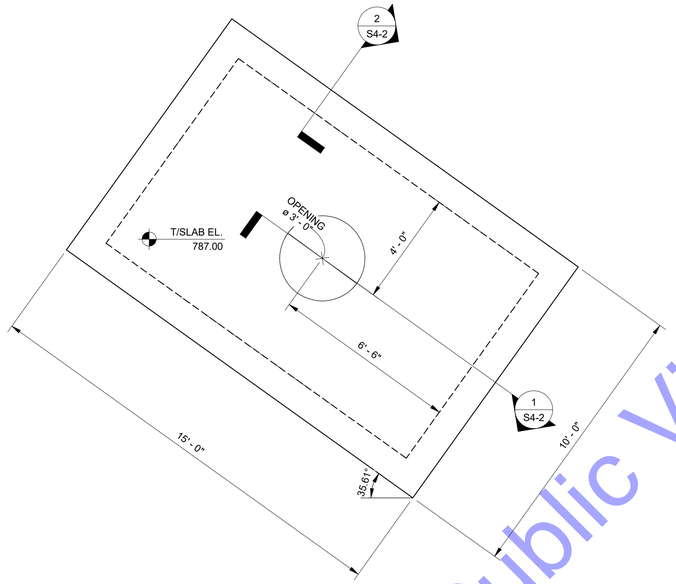

2 S4-1 STRUCTURE 107 UPPER SLAB PLAN
3/8" = 1'-0"

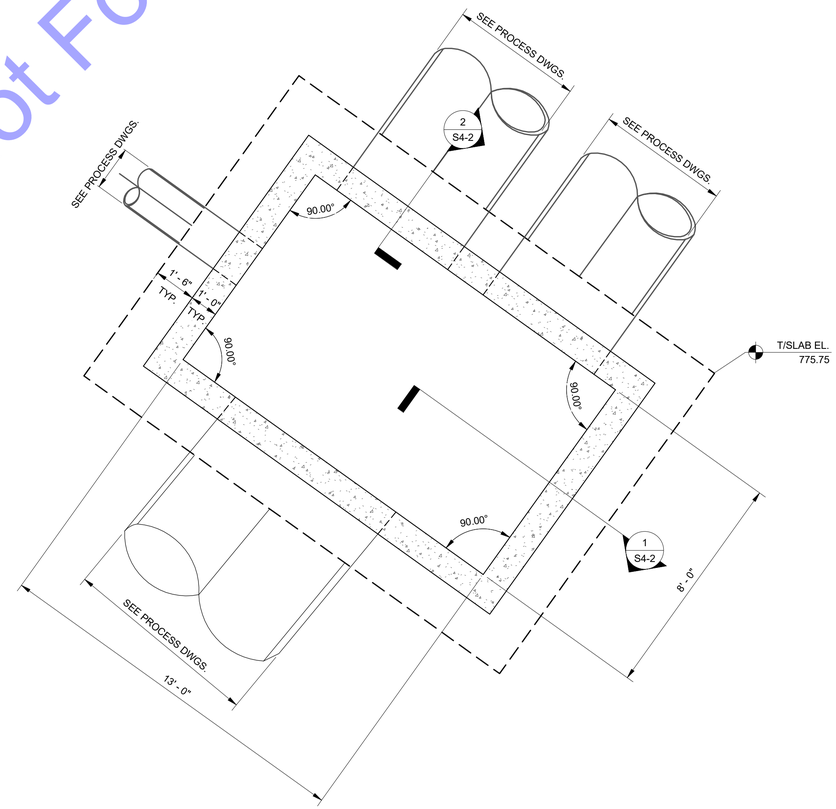

1 S4-1 STRUCTURE 107 FOUNDATION PLAN
3/8" = 1'-0"

For Public Viewing Only-Not For Download

COMMONWEALTH ENGINEERS, INC.
A wealth of resources to master a country's past.
https://commonwealthengineers.com/
OFFICE LOCATIONS IN:
INDIANAPOLIS, IN. (2)
EVANSVILLE, IN.
FORT WAYNE, IN.
CROWN POINT, IN.
BOWLING GREEN, KY.
SOUTH BEND, IN.

JOHN DAVID TAYLOR
REGISTERED
No. PE19900097
STATE OF INDIANA
PROFESSIONAL ENGINEER
Signature 08.19.25 Date

CE Solutions
structural engineers
3737 Glen Pkwy, Suite 300
Fishers, IN 46038
317.588.1121
cesolutionsinc.com

CITY OF KOKOMO, INDIANA
HOWARD COUNTY

NORTH SIDE INTERCEPTOR
IMPROVEMENTS PROJECT

© 2025 BY COMMONWEALTH ENGINEERS, INC. ALL RIGHTS RESERVED. DUPLICATION BY ANY METHOD IN WHOLE OR IN PART WITHOUT PERMISSION IS PROHIBITED

Indiana 811 Know what's below. Call before you dig.
1-800-382-5544 (ITS THE LAW)

No.	Submittal / Revision	By	Date

Designed By:	Drawn By:	Checked By:
JRS	JRS	NDB
Issue Date:	Project No:	Scale:
08/19/2025	25-105	As indicated

STRUCTURE 107
FOUNDATION AND
UPPER SLAB PLAN

Drawing No:
S4-1
Sheet: 131 OF 137

Saved: 8/19/2025 1:19:42 PM Current Local File: C:\Users\jrstone\Documents\25-105 North Side Interceptor Imprv.v24_jrstoneQ4993.rvt

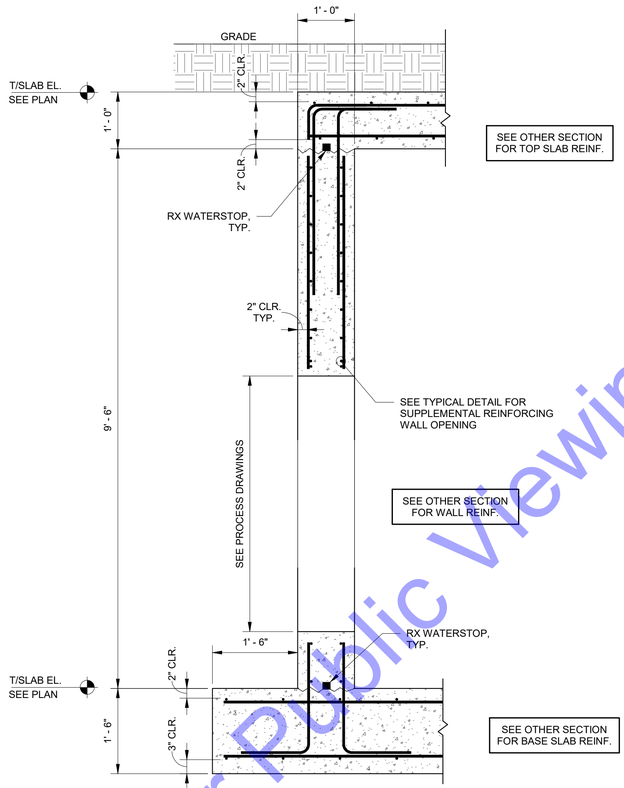

2 S4-2 SECTION
3/4" = 1'-0"

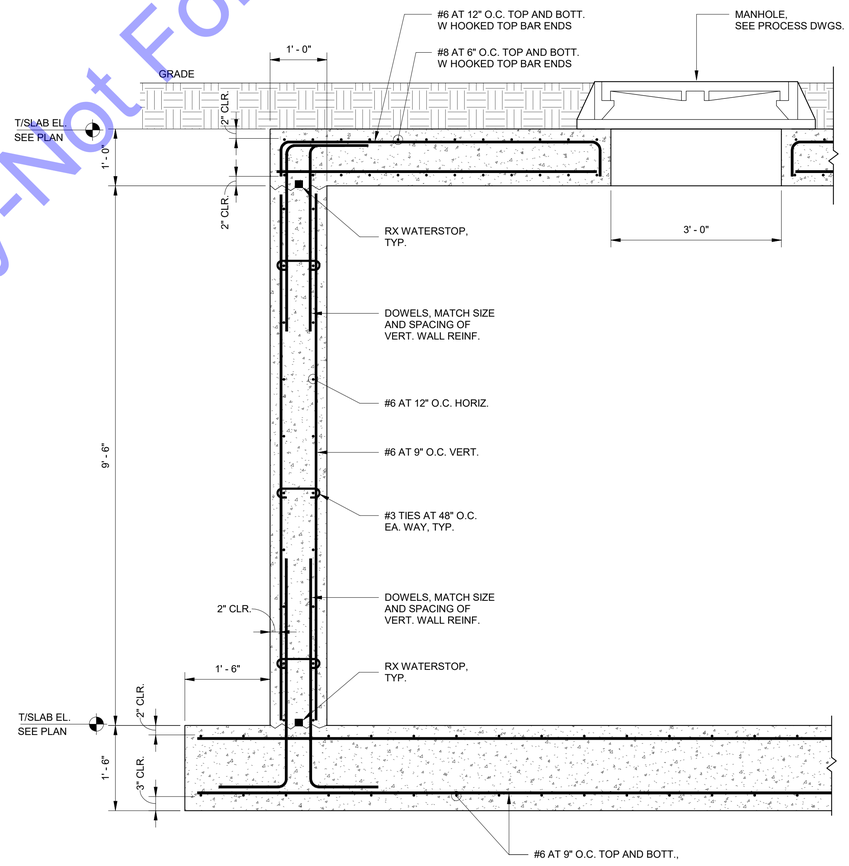

1 S4-2 SECTION
3/4" = 1'-0"

For Public Viewing Only-Not For Downloading

COMMONWEALTH ENGINEERS, INC.
A wealth of resources to master a common goal.
https://commonwealthengineers.com/
OFFICE LOCATIONS IN:
INDIANAPOLIS, IN. (2)
EVANSVILLE, IN.
FORT WAYNE, IN.
CROWN POINT, IN.
BOWLING GREEN, KY.
SOUTH BEND, IN.

JOHN DAVID TAYLOR
REGISTERED
No. PE19900097
STATE OF INDIANA
PROFESSIONAL ENGINEER

Signature 08.19.25 Date

CE Solutions
structural engineers
317.660.4130 | 10333 N. Meridian St. Suite 300 | Fishers, IN 46038
ceisolutionsllc.com

CITY OF KOKOMO, INDIANA
HOWARD COUNTY

NORTH SIDE INTERCEPTOR
IMPROVEMENTS PROJECT

© 2025 BY COMMONWEALTH ENGINEERS, INC. ALL RIGHTS RESERVED. REPRODUCTION BY ANY METHOD IN WHOLE OR IN PART WITHOUT PERMISSION IS PROHIBITED

IndianaOne-Call
Know what's below. Call before you dig.
1-800-382-5544
(ITS THE LAW)

No.	Submittal / Revision	By	Date

Designed By:	Drawn By:	Checked By:
JRS	JRS	NDB
Issue Date:	Project No:	Scale:
08/19/2025	25-105	3/4" = 1'-0"

STRUCTURE 107
SECTIONS AND DETAILS

Drawing No:
S4-2
Sheet: 132 OF 137

Saved: 8/19/2025 1:19:42 PM Current Local File: C:\Users\jrstone\Documents\25-105 North Side Interceptor Imprv.v24_jrstone04993.rvt

NOTE:

1. TEMPORARY WALL SHORING NOT REQUIRED FOR LEAK TESTS

NOTE - BACKFILL BEHIND CONCRETE WALLS:

1. BACKFILL MAY BE PLACED THE FULL HEIGHT OF THE TANK (10' 1") BEFORE THE TOP SLAB IS IN PLACE. THE CONCRETE WALLS SHALL BE ALLOWED TO CURE AT LEAST 7 DAYS WITH A MINIMUM CONCRETE COMPRESSIVE STRENGTH OF 3,000 PSI.
2. WALL BACKFILL SHALL BE FREE DRAINING GRANULAR MATERIAL EXTENDING FROM THE BASE OF THE WALL AT A 45-DEGREE ANGLE FROM VERTICAL TO FINISHED GRADE.
3. SEE THE GEOTECHNICAL REPORT FOR BACKFILL COMPACTION REQUIREMENTS.

FOUNDATION PLAN NOTES

(○) INDICATES NOTE REFERENCED IN PLAN

1. SEE THE S1-SERIES SHEETS FOR GENERAL STRUCTURAL NOTES AND TYPICAL STRUCTURAL DETAILS.
2. GENERAL CONTRACTOR TO COORDINATE ALL OPENING, PIPE SLEEVES, EMBEDDED ITEMS, HANDRAILS, GRATING, ETC. WITH THE PROCESS DRAWINGS.
3. ALL DIMENSIONS AND ELEVATIONS SHALL BE VERIFIED PRIOR TO FABRICATION, CONSTRUCTION OR ERECTION. THE GENERAL CONTRACTOR SHALL ASSUME RESPONSIBILITY FOR ANY DISCREPANCIES.
4. SEE SITE PLAN FOR ALL FINAL GRADE ELEVATIONS.
5. SEE GEOTECHNICAL REPORT FOR ALL BACKFILLING AND COMPACTION REQUIREMENTS BEHIND WALLS AND UNDER BASE SLABS.
6. GENERAL CONTRACTOR SHALL SUBMIT A CONSTRUCTION JOINT (CJ) AND CONTRACTION JOINT (CT) LOCATION PLAN TO THE STRUCTURAL ENGINEER FOR REVIEW PRIOR TO CONCRETE PLACEMENT.
7. SEE DETAILS 6/S1-2 AND 7/S1-2 FOR WALL CONSTRUCTION JOINT AND WALL CONTRACTION JOINT REQUIREMENTS.
8. MAINTAIN STRUCTURAL SLAB THICKNESSES AT ALL FLOOR SLOPES AND DEPRESSIONS.
9. CONTRACTOR SHALL CONFIRM LOCATION AND SIZE OF FLOOR HATCHES AND MANHOLE FRAMES PRIOR TO POURING CONCRETE
10. SHADED AREA REQUIRES HEAVIER REINFORCEMENT. SEE SECTION FOR ADDITIONAL INFORMATION

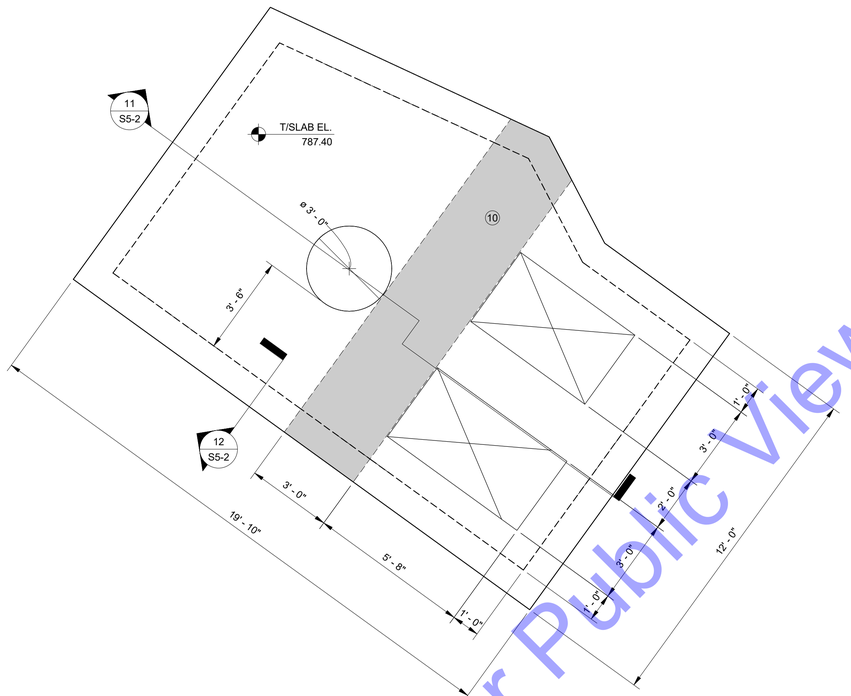

2 S5-1 STRUCTURE 108 UPPER SLAB PLAN
3/8" = 1'-0"

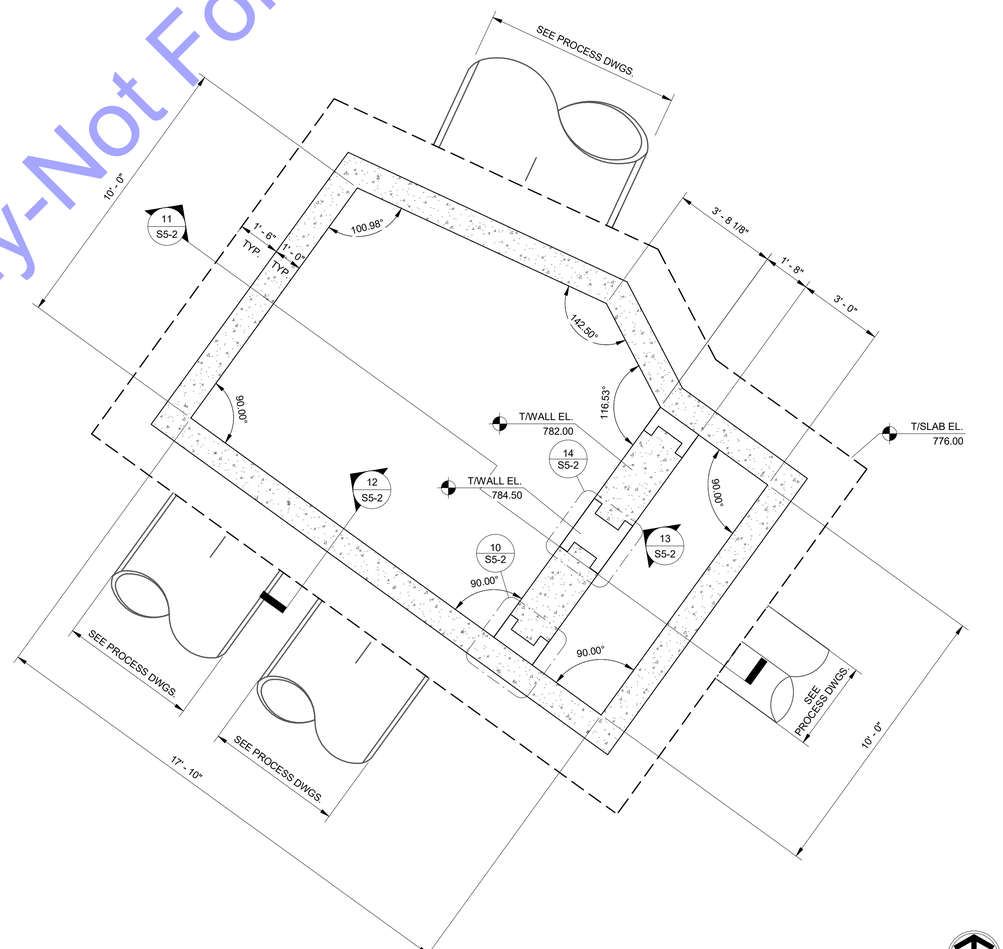

1 S5-1 STRUCTURE 108 FOUNDATION PLAN
3/8" = 1'-0"

For Public Viewing Only-Not For Download!!!

COMMONWEALTH ENGINEERS, INC.
A wealth of resources to master a common goal.
https://commonwealthengineers.com/
OFFICE LOCATIONS IN:
INDIANAPOLIS, IN. (2)
EVANSVILLE, IN.
FORT WAYNE, IN.
CROWN POINT, IN.
BOWLING GREEN, KY.
SOUTH BEND, IN.

JOHN DAVID TAYLOR
REGISTERED
No. PE19900097
STATE OF INDIANA
PROFESSIONAL ENGINEER
Signature 08.19.25 Date

CE Solutions
structural engineers
317.566.1444
3737 Woodland Ave. Suite 300
Zionsville, IN 46038
ceindystruct.com

CITY OF KOKOMO, INDIANA
HOWARD COUNTY

NORTH SIDE INTERCEPTOR IMPROVEMENTS PROJECT

© 2025 BY COMMONWEALTH ENGINEERS, INC. ALL RIGHTS RESERVED. REPRODUCTION BY ANY METHOD IN WHOLE OR IN PART WITHOUT PERMISSION IS PROHIBITED

Indiana 811 Know what's below. Call before you dig. 1-800-382-5544 (ITS THE LAW)

No.	Submittal / Revision	By	Date

Designed By:	Drawn By:	Checked By:
JRS	JRS	NDB
Issue Date:	Project No:	Scale:
08/19/2025	25-105	As indicated

STRUCTURE 108
FOUNDATION AND
UPPER SLAB PLAN

Drawing No:
S5-1
Sheet: 133 OF 137

Saved: 8/19/2025 1:19:43 PM Current Local File: C:\Users\jrstone\Documents\25-105 North Side Interceptor Imprv.v24_jrstoneQ4993.rvt

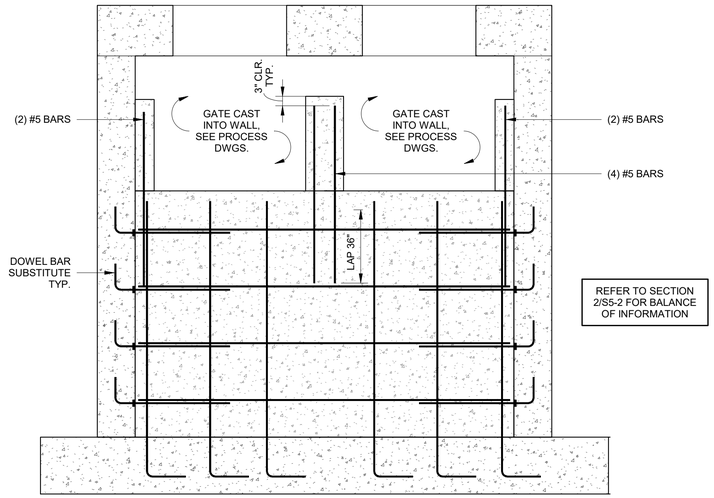

13 S5-2 **SECTION**
1/2" = 1'-0"

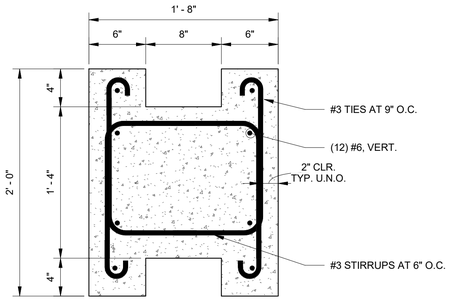

14 S5-2 **STOP LOG SUPPORT DETAILS**
1 1/2" = 1'-0"

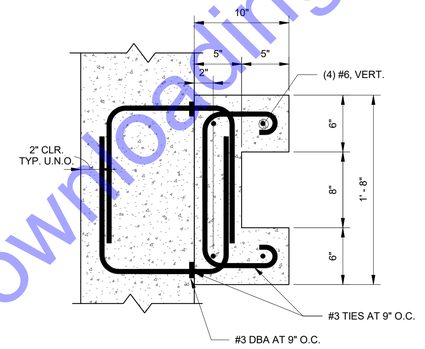

10 S5-2 **STOP LOG SUPPORT DETAILS**
1 1/2" = 1'-0"

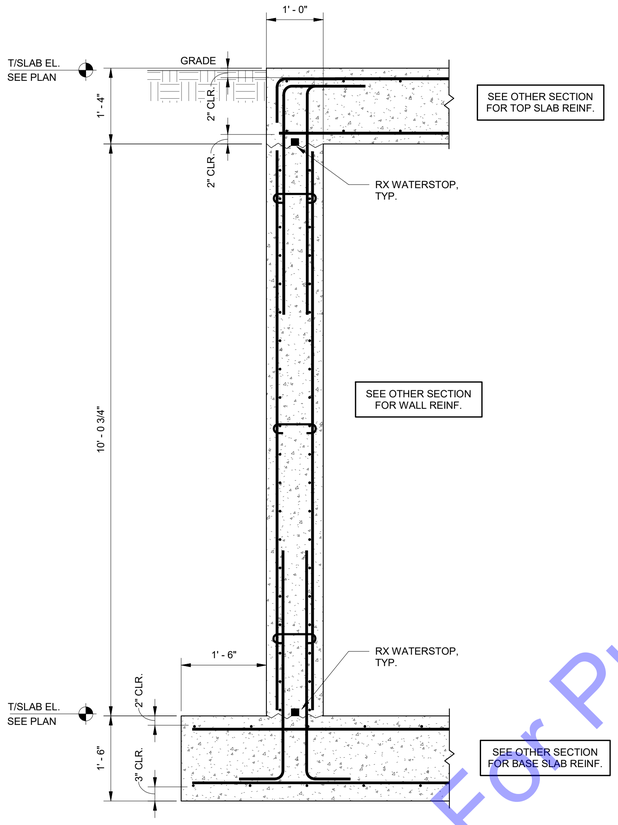

12 S5-2 **SECTION**
3/4" = 1'-0"

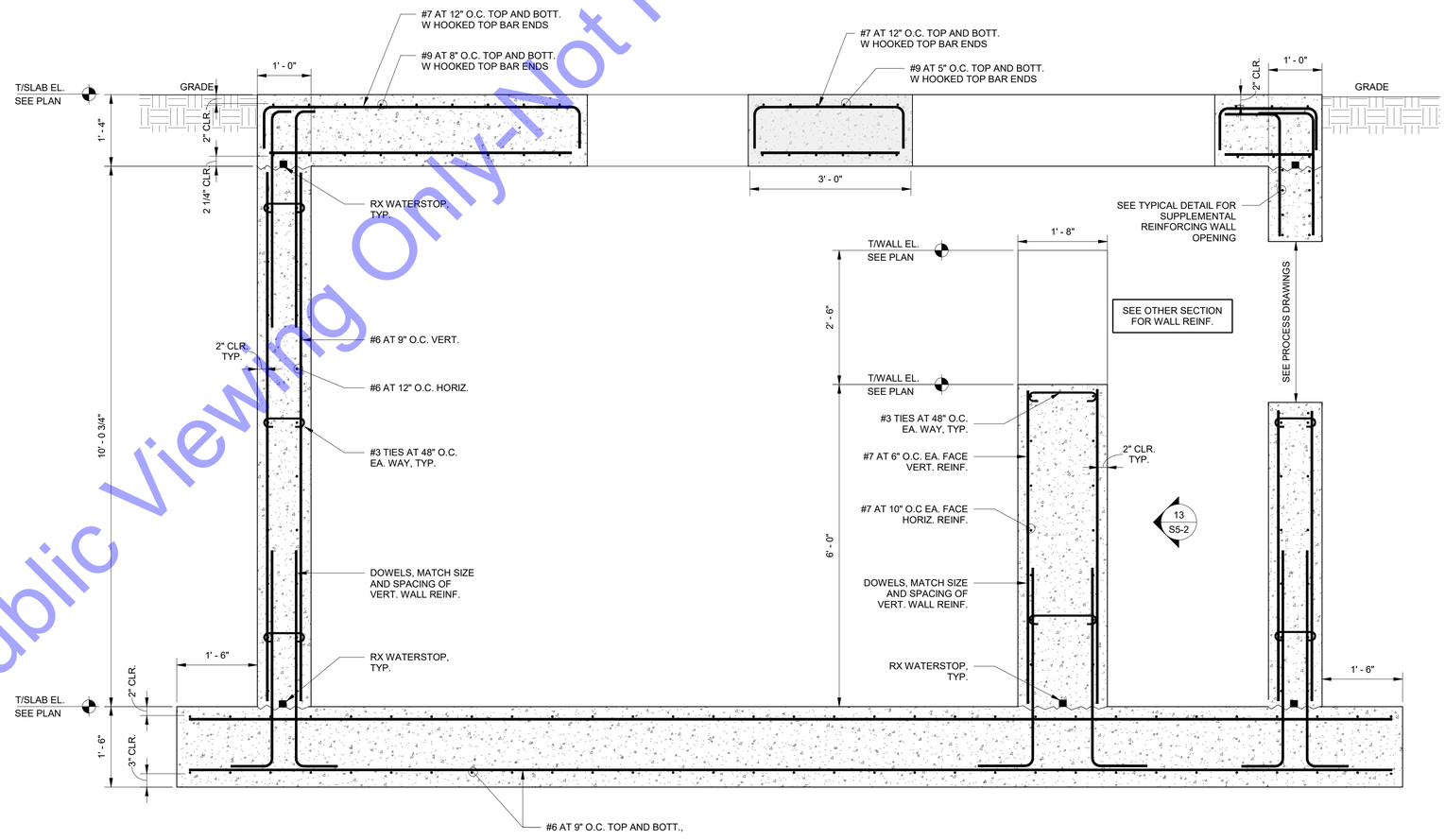

11 S5-2 **SECTION**
3/4" = 1'-0"

For Public Viewing Only-Not For Downloading

COMMONWEALTH ENGINEERS, INC.
A wealth of resources to master a common goal.
https://commonwealthengineers.com/
OFFICE LOCATIONS IN:
INDIANAPOLIS, IN. (2)
EVANSVILLE, IN.
FORT WAYNE, IN.
CROWN POINT, IN.
BOWLING GREEN, KY.
SOUTH BEND, IN.

JOHN DAVID TAYLOR REGISTERED No. PE19900097 STATE OF INDIANA PROFESSIONAL ENGINEER
Signature 08.19.25 Date

CE Solutions
structural engineers
317.580.1433 | 317.580.1435
Fishers, IN 46038 | 300
ceisolutionsinc.com

CITY OF KOKOMO, INDIANA
HOWARD COUNTY

NORTH SIDE INTERCEPTOR
IMPROVEMENTS PROJECT

© 2025 BY COMMONWEALTH ENGINEERS, INC. ALL RIGHTS RESERVED. REPRODUCTION BY ANY METHOD IN WHOLE OR IN PART WITHOUT PERMISSION IS PROHIBITED

Indiana 811 Know what's below. Call before you dig. 1-800-382-5544 (ITS THE LAW)

No.	Submittal / Revision	By	Date

Designed By:	Drawn By:	Checked By:
JRS	JRS	NDB
Issue Date:	Project No:	Scale:
08/19/2025	25-105	As indicated

STRUCTURE 108
SECTIONS AND DETAILS

Drawing No:
S5-2
Sheet: 134 OF 137

Saved: 8/19/2025 1:19:43 PM Current Local File: C:\Users\jrstone\Documents\25-105 North Side Interceptor Imprv.v24_jrstone04993.rvt

TUNNEL NOTES

1. THE TUNNELING METHOD, EXCAVATED TUNNEL BORE DIAMETER, AND CASING PIPE (TYPICAL SECTION 1) SUPPORT TYPE ARE TO BE SELECTED AND DESIGNED BY THE CONTRACTOR IN ACCORDANCE WITH DETAILED SPECIFICATIONS. THE CONTRACTOR SHALL PREPARE A POST-BID SUBMITTAL THAT INCLUDES SHOP DRAWINGS AND SUPPORTING CALCULATIONS FOR THEIR PROPOSED SYSTEM. THE SHOP DRAWINGS AND SUPPORTING CALCULATIONS SHALL BE SEALED BY A PROFESSIONAL ENGINEER LICENSED IN THE STATE OF INDIANA.

2. THE TUNNELING METHOD AND CASING PIPE SUPPORT SHALL MEET THE CRITERIA INCLUDED IN THE DRAWINGS AND SPECIFICATIONS, AND THEIR DESIGN SHALL BE REVIEWED AND APPROVED BY THE OWNER'S ENGINEER.

3. THE FINISHED SEWER SHALL CONSIST OF A 72-INCH INTERNAL DIAMETER PIPE HAVING HORIZONTAL AND VERTICAL ALIGNMENT THAT MATCHES THE PLAN AND PROFILE SHEETS WITH SUFFICIENT THICKNESS AND REINFORCEMENT FOR THE REQUIRED DEPTHS AND LOADING CONDITIONS.

4. THE PIPE MATERIAL AND DESIGN PROPOSED BY THE CONTRACTOR SHALL BE PROVIDED TO THE OWNER IN THE FORM OF A POST-BID SUBMITTAL.

5. MINIMUM THICKNESS OF ANNULAR GROUT (TYPICAL SECTION 1) SHALL FOLLOW CASING AND PRODUCTION PIPE MANUFACTURER'S RECOMMENDATIONS AND CONTRACTOR'S PROPOSED BORE METHOD AND DIAMETER.

6. THE CONTRACTOR SHALL PROPOSE AND PROVIDE THE METHOD OF GRADE CONTROL AND BLOCKING (TYPICAL SECTION 1) TO SUPPORT THE CARRIER PIPE TO PREVENT FLOTATION OR MOVEMENT WHILE PLACING ANNULAR GROUT, AND TO ENSURE FINISHED GRADES MEET THE SPECIFIED TOLERANCES.

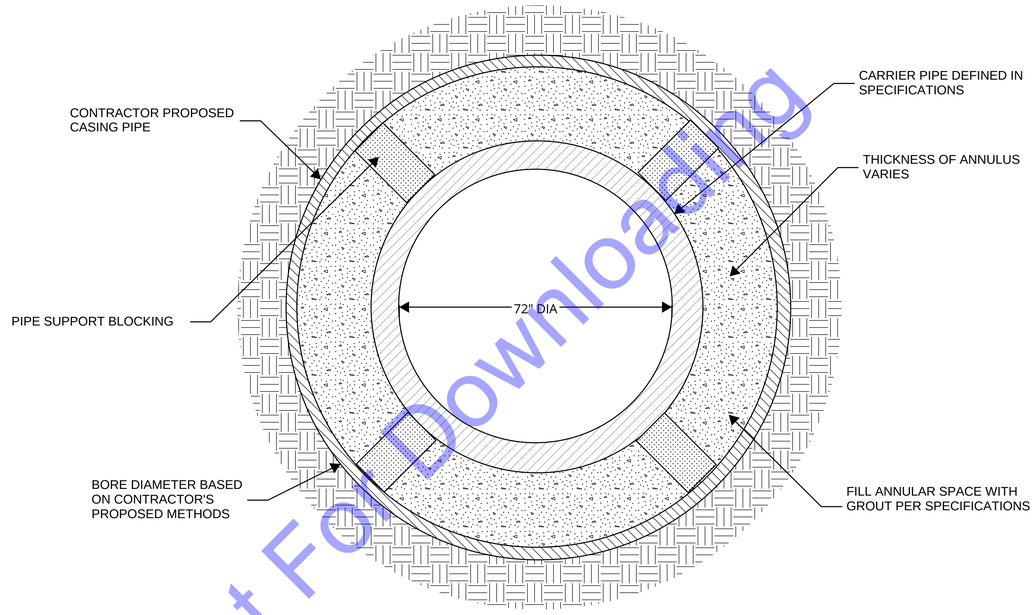

TYPICAL SECTION 1
CONTRACTOR PROPOSED CASING WITH CARRIER PIPE DEFINED IN PART 8 DETAILED SPECIFICATIONS

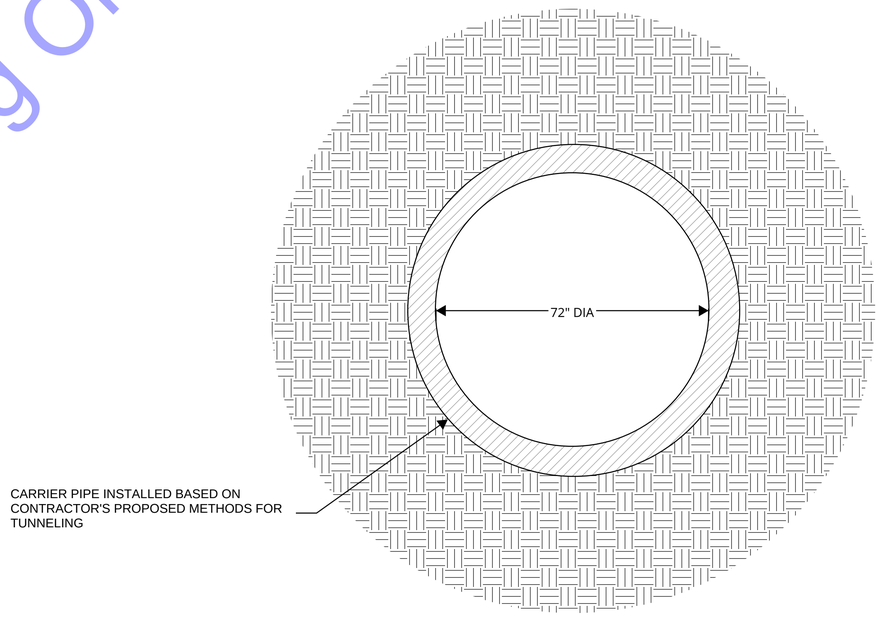

TYPICAL SECTION 2
TUNNELING WITH CARRIER PIPE DEFINED IN PART 8 DETAILED SPECIFICATIONS

For Public Viewing Only-Not For Downloading

COMMONWEALTH ENGINEERS, INC.
A wealth of resources to master a common goal.
https://commonwealthengineers.com/

JAMIE MICHELLE BATES
REGISTERED
No. 12000694
STATE OF INDIANA
PROFESSIONAL ENGINEER
Signature 8/15/2025 Date

SME
www.sme-usa.com

CITY OF KOKOMO, INDIANA
HOWARD COUNTY

NORTH SIDE INTERCEPTOR IMPROVEMENTS PROJECT

© 2025 BY COMMONWEALTH ENGINEERS, INC. ALL RIGHTS RESERVED. REPRODUCTION BY ANY METHOD IN WHOLE OR IN PART WITHOUT PERMISSION IS PROHIBITED

Indiana 811 Know what's below. Call before you dig.
Know what's below. 811 before you dig.
1-800-382-5544 (ITS THE LAW)

No.	Submittal / Revision	By	Date

Designed By:	Drawn By:	Checked By:
JMB	MNR	THB
Issue Date: 8/2025	Project No: S21082	Scale: AS SHOWN

TUNNELING SECTION AND NOTES

Drawing No: **GT1**

Sheet: 135 OF 137

File: \\SME-INC\P2\WIP\087521.03\CAD\DESIGN FILES\GEO\REVT\087521.03-MONITORING.DWG
Saved: 7/30/2025 12:03:41 PM Plotted: 8/11/2025 11:30:52 AM Current User: Matt Nowak-Rochford LastSavedBy: matt.nowakrochford

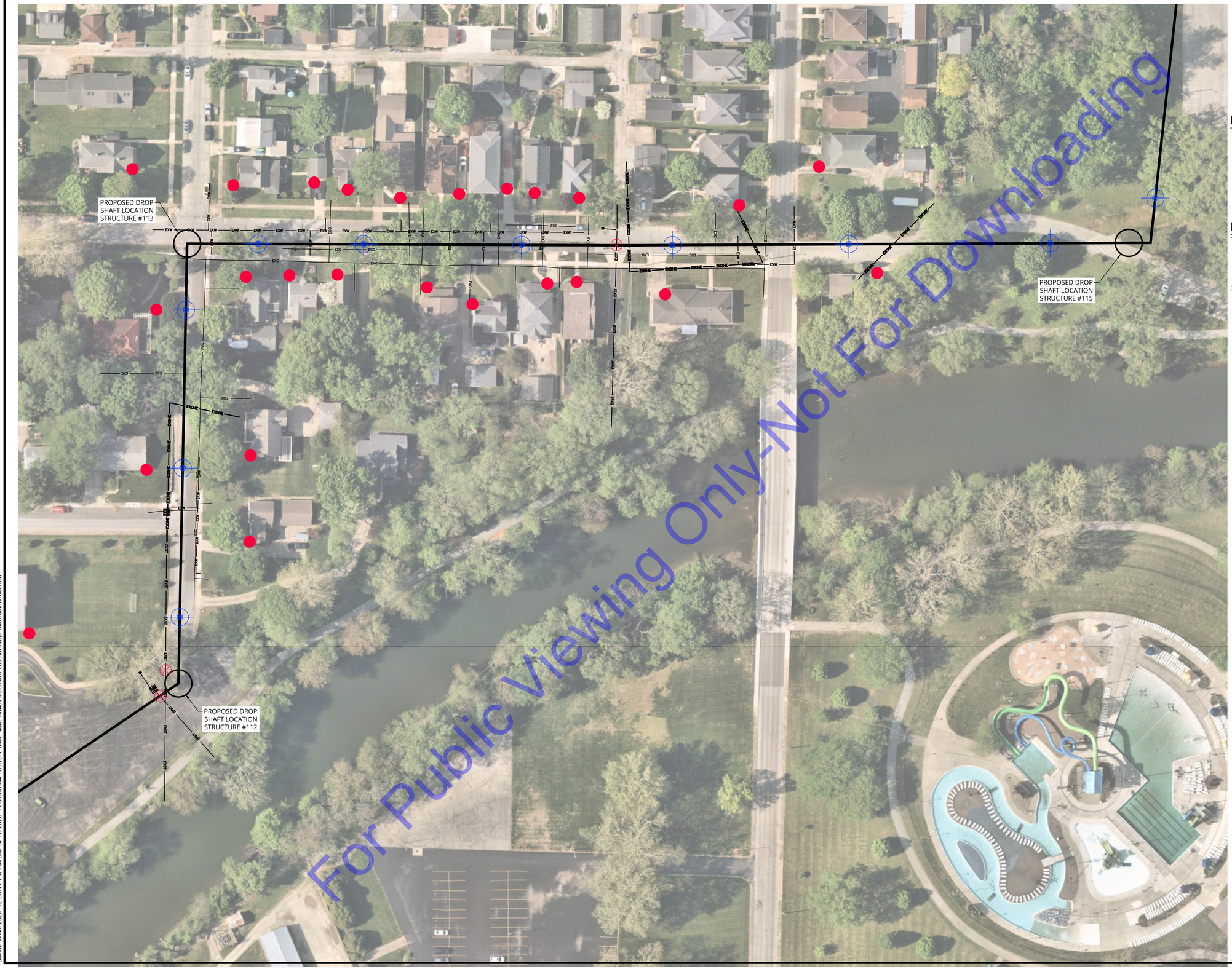

For Public Viewing Only-Not For Downloading

N
W E
S

0' 50' 100'

GRAPHIC SCALE: 1" = 50'

LEGEND

- SURFACE MONITORING POINT (SMP)
- GROUND MONITORING POINT (GMP)
- TELL TALE MONITORING POINT
- PROPOSED ROUTE

NOTES

1. BASE DRAWING INFORMATION TAKEN FROM A DRAWING TITLED "GENERAL LOCATION PLAN AND CONTROL" (SHEET G4) WITH A LATEST REVISION DTE OF 12-20-2023, PREPARED BY COMMONWEALTH ENGINEERS, INC.
2. AERIAL IMAGE TAKEN FROM NEARMAP WITH AN IMAGE DATE OF 5-31-2023.

COMMONWEALTH ENGINEERS, INC.
A wealth of resources to master a common goal.
https://commonwealthengineers.com/

JAMIE MICHELLE BATES
REGISTERED
No. 12000694
STATE OF INDIANA
PROFESSIONAL ENGINEER

Signature 8/15/2025 Date

SME
www.sme-usa.com

CITY OF KOKOMO, INDIANA
HOWARD COUNTY

NORTH SIDE INTERCEPTOR
IMPROVEMENTS PROJECT

© 2025 BY COMMONWEALTH ENGINEERS, INC. ALL RIGHTS RESERVED. REPRODUCTION BY ANY METHOD IN WHOLE OR IN PART WITHOUT PERMISSION IS PROHIBITED

Indiana 811 Know what's below. Call before you dig.
1-800-382-5544 (ITS THE LAW)

No.	Submittal / Revision	By	Date

Designed By:	Drawn By:	Checked By:
JMB	MNR	THB
Issue Date: 8/2025	Project No: S21082	Scale: AS SHOWN

GEOTECHNICAL INSTRUMENTATION PLAN

Drawing No:
GT2
Sheet: 136 OF 137

File: \\SME-INC\PZ\WIP\087521.03\CAD\DESIGN FILES\GEO\REV1\087521.03-MONITORING.DWG
Saved: 7/30/2025 12:03:41 PM Plotted: 8/11/2025 11:31:38 AM Current User: Matt Nowak-Rochford LastSavedBy: matt.nowakrochford

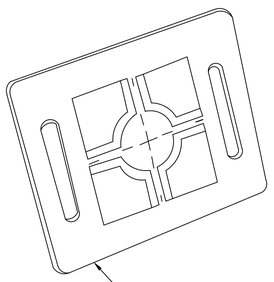

REFLECTIVE SURVEY TARGET FIXED TO SHEET PILES AND STRUCTURES WITH EPOXY OR ANCHORS

REFLECTIVE TARGET

NOT TO SCALE

NOTES

FOR SMPS LOCATED ON HARD VERTICAL SURFACES, ADHERE SURVEY TARGET TO SURFACE USING EPOXY OR ANCHORS.

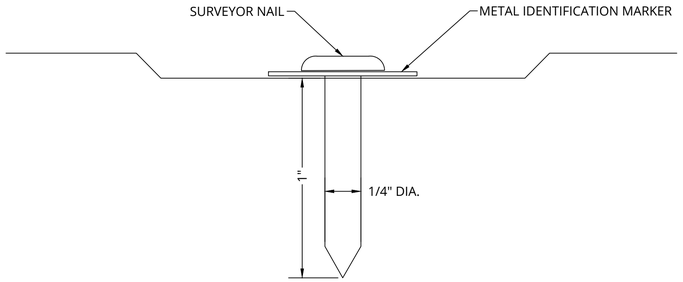

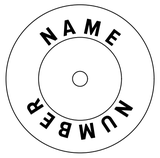

METAL IDENTIFICATION MARKER

SURFACE MONITORING POINT

NOT TO SCALE

NOTES

SURFACE MONITORING POINT WILL BE SURVEYOR'S NAILS INSTALLED IN PAVEMENT AREAS. THE PURPOSES OF THE SURFACE MONITORING POINT IS TO MEASURE VERTICAL ELEVATION CHANGES HORIZONTAL MOVEMENT OF THE GROUND SURFACE.

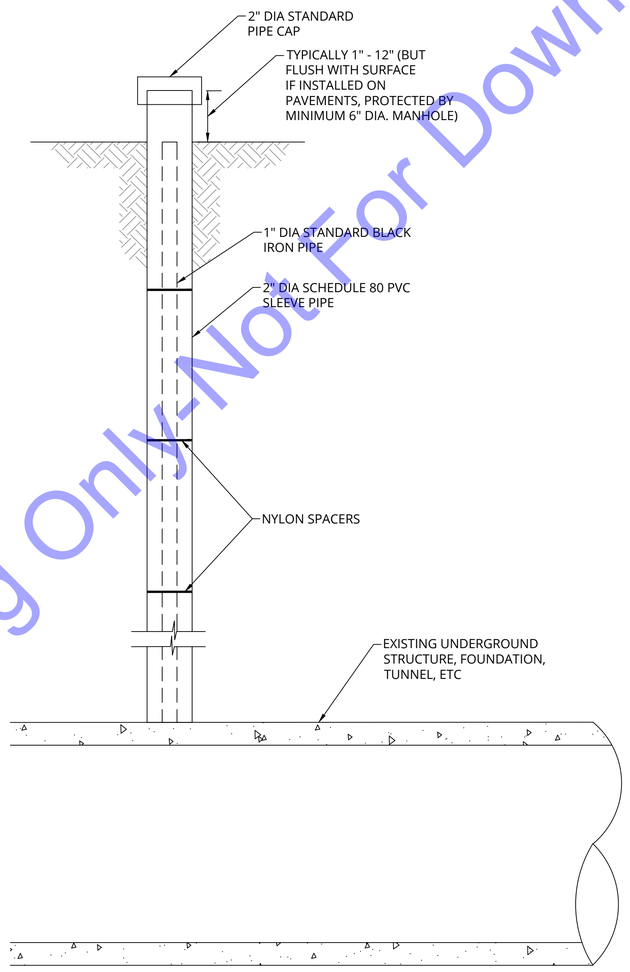

TYPICAL TELL TALE CONFIGURATION

NOT TO SCALE

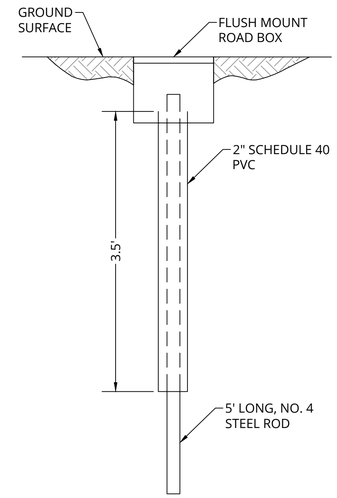

GROUND MONTORING POINT

NOT TO SCALE

INSTALLATION NOTES

1. IF GMP IS LOCATED IN PAVEMENT, CORE 8-INCH HOLE PRIOR TO DRILLING BOREHOLE.
2. DRILL OR HAND-AUGER BOREHOLE TO 4 FEET DEEP.
3. INSTALL PVC SLEEVE AND BACKFILL AROUND PVC SLEEVE WITH SOIL CUTTINGS.
4. INSTALL 5-FOOT LONG NO. 4 STEEL ROD INSIDE PVC SLEEVE.
5. SET FLUSH MOUNT ROAD BOX.

For Public Viewing Only-Not For Downloading

COMMONWEALTH ENGINEERS, INC.
A wealth of resources to master a common goal.
https://commonwealthengineers.com/

JAMIE MICHELLE BATES
REGISTERED
No. 12000694
STATE OF INDIANA
PROFESSIONAL ENGINEER
Signature
8/15/2025
Date

SME
www.sme-usa.com

CITY OF KOKOMO, INDIANA
HOWARD COUNTY

NORTH SIDE INTERCEPTOR IMPROVEMENTS PROJECT

© 2025 BY COMMONWEALTH ENGINEERS, INC. ALL RIGHTS RESERVED. REPRODUCTION BY ANY METHOD IN WHOLE OR IN PART WITHOUT PERMISSION IS PROHIBITED

Indiana 811
Know what's below. Call before you dig.
Know what's below. 811 before you dig.
1-800-382-5544
(ITS THE LAW)

No.	Submittal / Revision	By	Date

Designed By:	Drawn By:	Checked By:
JMB	MNR	THB
Issue Date: 8/2025	Project No: S21082	Scale: AS SHOWN

GEOTECHNICAL INSTRUMENTATION DETAILS

Drawing No:
GT3
Sheet: 137 OF 137

File: \\SME-INC\PZ\WIP\087521.03\CAD\DESIGN FILES\GEO\REV1\087521.03-MONITORING.DWG
Saved: 7/30/2025 12:03:41 PM Plotted: 8/11/2025 11:32:23 AM Current User: Matt Nowak-Rochford LastSavedBy: matt.nowakrochford