SET NO.

CITY OF RENSSELAER
JASPER COUNTY, INDIANA

7TH STREET IMPROVEMENTS

JULY 2025

For Public Viewing Only - Not for Downloading

BOARD OF PUBLIC WORKS

JEFFREY S. PHILLIPS.....MAYOR
ERNEST WATSON JR.....MEMBER
JEFF RAYBURN.....MEMBER
SHELBY KEYS.....CLERK-TREASURER

BRYCE BLACK.....WATER-WASTEWATER SUPERINTENDENT
TODD SAMMONS.....CITY ATTORNEY

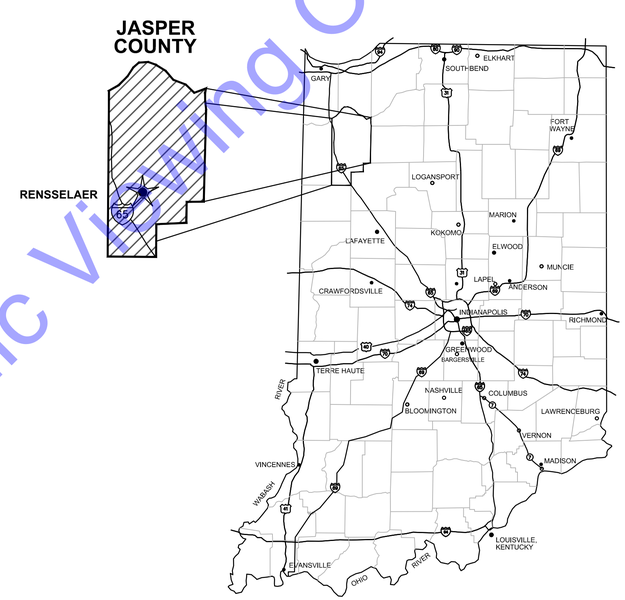

GENERAL LOCATION MAP

COMMONWEALTH™ ENGINEERS, INC.
A wealth of resources to master a common goal.

QA/QC BY : _____ 9-9-25
DATE :

CERTIFIED BY : _____ 7-7-25
RYAN M. LAREAU, P.E.
INDIANA P.E. No. 11800145
DATE :

RYAN M LAREAU REGISTERED No. 11800145 STATE OF INDIANA PROFESSIONAL ENGINEER

CONTRACT NO. : H25033

© 2025 BY COMMONWEALTH ENGINEERS, INC. ALL RIGHTS RESERVED. REPRODUCTION BY ANY METHOD IN WHOLE OR IN PART WITHOUT PERMISSION IS PROHIBITED

File: Z:\SHARED\IN CLIENTS M-Z\RENSSELAER\D H25033 - 7TH STREET IMPROVEMENTS\06 CAD\A CURRENT FILES\1 DRAWINGS\01-TITLE SHEET.DWG
Saved: 7/7/2025 2:14:31 PM Plotted: 7/7/2025 2:15:05 PM Current User: Joseph Lopez LastSavedBy: jlopez

VICINITY MAP

SCALE: 1"=1000'-0"

0 1000' 2000'

DRAWING SET INDEX

SHEET NO.	DRAWING NO.	SHEET TITLE
GENERAL DRAWINGS		
01	G1	TITLE SHEET
02	G2	VICINITY MAP AND DRAWING SET INDEX
03	G3	GENERAL ABBREVIATIONS, LEGENDS, SYMBOLS, AND NOTES
04	G4	SURVEY DATA AND DRAWING INDEX MAP
LAYOUT DRAWINGS		
05	TS1	TYPICAL CROSS SECTION
06	GL1	GEOMETRIC LAYOUT PLAN
DEMOLITION AND EROSION CONTROL DRAWINGS		
07	DR1	DEMOLITION, RESTORATION AND EROSION CONTROL PLAN VIEWS
08	EC1	EROSION CONTROL DETAILS
09	EC2	EROSION CONTROL DETAILS
WATER MAIN DRAWINGS		
10	C1-1	PLAN AND PROFILE VIEWS - LINE "WM-1"
11	C1-2	PLAN AND PROFILE VIEWS - LINE "WM-1"
12	C1-3	WATER MAIN DETAILS
13	C1-4	WATER MAIN DETAILS
14	C1-5	WATER MAIN DETAILS
SANITARY SEWER DRAWINGS		
15	C2-1	PLAN AND PROFILE VIEWS - LINE "SS-1"
16	C2-2	PLAN AND PROFILE VIEWS - LINE "SS-1"
17	C2-3	SANITARY SEWER DETAILS
18	C2-4	SANITARY SEWER DETAILS
STORM SEWER DRAWINGS		
19	C3-1	PLAN AND PROFILE VIEWS - LINE "ST-1" AND "ST-2"
20	C3-2	PLAN AND PROFILE VIEWS - LINE "ST-1"
21	C3-3	STORM SEWER DETAILS
ROAD CONSTRUCTION DRAWINGS		
22	C4-1	PLAN AND PROFILE VIEWS - LINE "RD-1"
23	C4-2	PLAN AND PROFILE VIEWS - LINE "RD-1"
24	C4-3	ROAD CONSTRUCTION DETAILS
25	C4-4	INTERSECTION DETAILS
MAINTAINANCE OF TRAFFIC DRAWINGS		
26	MOT1	MAINTENANCE OF TRAFFIC

*ALL WORK SHOWN HEREIN RELATED TO WATER MAIN, SANITARY SEWER, OR STORM SEWER IS TO BE COMPLETED BY OTHERS. THESE ITEMS ARE SHOWN FOR INFORMATIONAL PURPOSES ONLY.

For Public Viewing Only - Not for Downloading

COMMONWEALTH ENGINEERS, INC.
A wealth of resources to create a common goal.
https://commonwealthengineers.com/

RYAN M. LAREAU
REGISTERED No. 11800145 STATE OF INDIANA
PROFESSIONAL ENGINEER

Signature 7-7-25 Date

CITY OF RENSSELAER
JASPER COUNTY, IN

7TH STREET IMPROVMENTS

© 2025 BY COMMONWEALTH ENGINEERS, INC. ALL RIGHTS RESERVED. REPRODUCTION BY ANY METHOD IN WHOLE OR IN PART WITHOUT PERMISSION IS PROHIBITED

Indiana811 Know what's below. 811 before you dig. 1-800-382-5544 (ITS THE LAW)

No.	Submittal / Revision	By	Date

Designed By:	Drawn By:	Checked By:
RML	JML	RM
Issue Date:	Project No:	Scale:
---	H25033	AS SHOWN

VICINITY MAP AND DRAWING SET INDEX

Drawing No:
G2

Sheet: 02 OF 26

File: Z:\SHAREDIN CLIENTS M-Z\RENSSELLAERO H25033 - 7TH STREET IMPROVEMENTS\06 CAD\A CURRENT FILES\1 DRAWINGS\02-GENERAL DRAWINGS.DWG
Saved: 7/7/2025 1:53:18 PM Plotted: 7/7/2025 2:08:18 PM Current User: Joseph Lopez LastSavedBy: jlopez

GENERAL ABBREVIATIONS

A	AIR
AB	ANCHOR BOLT
AFF	ABOVE FINISH FLOOR
ALT	ALTERNATE
ALUM	ALUMINUM
@	AT
APP.	APPARENT
ATT	AERATION TANK TRANSFER
AUTO	AUTOMATIC
AVG	AVERAGE
B	BAFFLE
BLDG	BUILDING
BM	BENCH MARK
BOT	BOTTOM
BRG	BEARING
CFM	CUBIC FEET PER MINUTE
CL	CENTERLINE
CO	CLEAN OUT
COL/C	COLUMN
CONC	CONCRETE
COP	COPPER
CJ	CONSTRUCTION JOINT
CW	COLD WATER
CY	CUBIC YARD
D	DRAIN
DEC	DECANT
DIA	DIAMETER
DIM	DIMENSION
DI	DUCTILE IRON PIPE
DL	DEAD LOAD
DSPT	DOWN SPOUT
DWG	DRAWING
E	ELECTRICAL CONDUIT
EA	EACH
EF	EACH FACE
EFFL	EFFLUENT
EL	ELEVATION
EW	EACH WAY
EX	EXISTING
EXF	EXHAUST FAN
EXP JP	EXPANSION JOINT
F	FILTER
FCAR	FLANGED COUPLING ADAPTER, RESTRAINED
FD	FLOOR DRAIN
FDN	FOUNDATION
FH	FIRE HYDRANT
FLD	FILTRATE DRAIN
FLG	FLANGE
FL	FLUSHING LINE
FLR	FLOOR
FM	FORCE MAIN
FRP	FIBER REINFORCED PLASTIC
FT	FEET OR FOOT
FTG	FOOTING
FW	FINISHED WATER
G	GAS
GALV	GALVANIZED
GEN	GENERAL
GRD	GROUND OR GRADE
HB	HOSE BIBB
HORIZ	HORIZONTAL
HP	HORSEPOWER
HW	HOT WATER
ID	INSIDE DIAMETER
IJ	ISOLATION JOINT
INV	INVERT
IP	IRON PIN
LAV	LAVATORY
LB	POUND
LL	LIVE LOAD
LLV	LONG LEG VERTICAL
LTG	LIGHTING
MAX	MAXIMUM
MCC	MOTOR CONTROL CENTER
MGD	MILLIONS GALLONS PER DAY
MH	MANHOLE
MIN	MINIMUM, MINUTE
MJ	MECHANICAL JOINT
NC	NORMALLY CLOSED
NG	NATURAL GAS
NIC	NOT IN CONTRACT
NO	NORMALLY OPEN
NO.	NUMBER
NPW	NON-POTABLE WATER
OC	ON CENTER
OD	OUTSIDE DIAMETER
OPG	OPENING
OPP	OPPOSITE
PB	PULL BOX
PE	POLYETHYLENE EXP. JT.
	MATERIAL
P/L	PROPERTY LINE
POJ	PUSH ON JOINT
PSF	POUNDS PER SQUARE FOOT
PSI	POUNDS PER SQUARE INCH
PVC	POLYVINYL CHLORIDE
PW	POTABLE WATER
R	RECIRULCATION
RAD	RADIUS
RAS	RETURN ACTIVATED SLUDGE
RCP	REINFORCED CONCRETE PIPE
RD	ROOF DRAIN
REINF	REINFORCING
REQ'D	REQUIRED
R/W (ROW)	RIGHT-OF-WAY
SAN	SANITARY
SAS	SANITARY SEWER
SCH	SCHEDULE
SECT	SECTION
SF	SQUARE FEET
SHT	SHEET
SL	SAMPLE LINE
SOS	STORM SEWER
SP	STOP PLATE
SQ	SQUARE
STD	STANDARD
S STL, SS	STAINLESS STEEL
STL	STEEL
SUP	SUPERNATANT
SY	SQUARE YARD
TOS	TOP OF SLAB
TOW	TOP OF WALL
TW	TERTIARY WATER
TYP	TYPICAL
V	VACUUM OR VALVE
VAR	VARIES
VERT	VERTICAL
W	WEIR
W/	WITH
W/O	WITHOUT
WAS	WASTE ACTIVATED SLUDGE
WC	WATER CLOSET
WH	WATER HEATER
WL	WATER LINE
WWF	WELDED WIRE FABRIC
YH	YARD HYDRANT

GENERAL NOTES

1. ALL PROPERTY AND RIGHT-OF-WAY LINE INFORMATION SHOWN IN DRAWING SET ARE APPARENT AND SHALL NOT BE DEEMED EXACT LOCATIONS, UNLESS OTHERWISE NOTED. INFORMATION WAS OBTAINED VIA "INDIANA ON-LINE" GIS SHAPE FILES.
2. EXISTING UTILITY INFORMATION SHOWN IN DRAWING SET, MEETS "ASCE 36-02" QUALITY LEVEL **"C"**, UNLESS OTHERWISE NOTED.

   UTILITY COORDINATION AND PROJECT DEPICTION OF EXISTING SUBSURFACE UTILITY DATA:

   UTILITY QUALITY LEVEL DESCRIPTIONS:

   UTILITY QUALITY LEVEL A - PRECISE HORIZONTAL AND VERTICAL LOCATION OF UTILITIES OBTAINED BY THE ACTUAL EXPOSURE (OR VERIFICATIONS OF PREVIOUSLY EXPOSED AND SURVEYED UTILITIES) AND SUBSEQUENT MEASUREMENT OF SUBSURFACE UTILITIES, USUALLY AT A SPECIFIC POINT. ACCURACY OF LOCATION MATCHES PROJECT SURVEY TOLERANCE.

   UTILITY QUALITY LEVEL B - INFORMATION OBTAINED THROUGH THE APPLICATION OF APPROPRIATE SURFACE GEOPHYSICAL METHODS TO DETERMINE THE EXISTENCE AND APPROXIMATE HORIZONTAL POSITION SUBSURFACE UTILITIES. THE RELIABILITY OF THIS INFORMATION IS SURVEYED TO PROJECT CONTROL AND SUBJECT TO ACCURACY LEVELS OF THE GEOPHYSICAL TOLERANCE DEFINED BY THE PROJECT.

   UTILITY QUALITY LEVEL C - INFORMATION OBTAINED BY SURVEYING AND PLOTTING VISIBLE ABOVE GROUND UTILITY FEATURES AND CORRELATING QUALITY LEVEL "D" INFORMATION.

   UTILITY QUALITY LEVEL D - INFORMATION DERIVED FROM EXISTING RECORDS OR VERBAL RECOLLECTIONS.
3. NORTHING AND EASTING COORDINATES SHOWN ON ALL MANHOLE, INLETS, ETC. ARE SHOWN FROM CENTER OF STRUCTURE NOT CASTING, UNLESS OTHERWISE NOTED.
4. ALL MANHOLES THAT HAVE PIPE INVERT DIFFERENTIAL OF 2' OR GREATER, SHALL BE CONSIDERED A DROP MANHOLE. CONTRACTOR SHALL REFER TO MISCELLANEOUS DETAILS AND DETAILED SPECIFICATIONS FOR MORE INFORMATION.

HATCHING SYMBOLS

- -CMU WALL (PLAN VIEW)
  -GRANULAR BACKFILL (PROFILE VIEW)
- DEMOLITION (CONTRACTOR SHALL REFER TO DETAILED SPECIFICATIONS)
- GROUT
- CONCRETE
- STEEL
- COMPACTED GRANULAR BACKFILL OR COMPACTED FOUNDATION
- ABANDONED IN PLACE

DRAWING SET LEGEND

- SANITARY SEWER (EXST.)
- SANITARY SEWER (EXST.)
- SANITARY SEWER (RECORD)
- STORM SEWER (EXST.)
- STORM SEWER (EXST.)
- STORM SEWER (RECORD)
- OVERHEAD ELECTRIC LINE (EXST.)
- OVERHEAD ELECTRIC LINE (RECORD)
- UNDERGROUND PRIMARY ELECTRIC LINE (EXST.)
- UNDERGROUND PRIMARY ELECTRIC LINE (RECORD)
- UNDERGROUND ELECTRIC LINE (EXST.)
- UNDERGROUND ELECTRIC LINE (RECORD)
- OVERHEAD UTILITY- MULTIPLE SVCS. (EXST.)
- OVERHEAD UTILITY- MULTIPLE SVCS. (RECORD)
- UNDERGROUND UTILITY- MULTIPLE SVCS. (EXST.)
- UNDERGROUND UTILITY- MULTIPLE SVCS. (RECORD)
- OVERHEAD TELECOM/DATA LINE (EXST.)
- OVERHEAD TELECOM/DATA LINE (RECORD.)
- UNDERGROUND TELECOM/DATA LINE (EXST.)
- UNDERGROUND TELECOM/DATA LINE (RECORD)
- OVERHEAD FIBER OPTIC LINE (EXST.)
- OVERHEAD FIBER OPTIC LINE (RECORD)
- UNDERGROUND FIBER OPTIC LINE (EXST.)
- UNDERGROUND FIBER OPTIC LINE (RECORD)
- GAS LINE (EXST.)
- GAS LINE (RECORD)
- WATER LINE (EXST.)
- WATER LINE (RECORD)
- CHILLED WATER LINE (EXST.)
- CHILLED WATER LINE (RECORD)
- HOT WATER LINE (EXST.)
- HOT WATER LINE (RECORD)
- IRRIGATION LINE (EXST.)
- IRRIGATION LINE (RECORD)
- HAND RAIL
- FENCE LINE (TYP.)
- CHAIN-LINK FENCE LINE
- FARM FIELD TYPE FENCE
- EDGE OF LANDSCAPING
- GUARDRAIL
- APPARENT RIGHT-OF-WAY
- APPARENT PROPERTY LINE
- EDGE OF ROAD
- EDGE OF ROAD WITH CURB
- EXISTING MAJOR CONTOUR LINE
- EXISTING MINOR CONTOUR LINE
- **NEW WATER LINE**
- **PROPOSED MAJOR CONTOUR LINE**
- **PROPOSED MINOR CONTOUR LINE**
- COMMUNICATION UTILITIES VAULT
- COMMUNICATION BOX
- COMMUNICATION UTILITIES PEDESTAL
- COMMUNICATION UTILITIES MANHOLE
- BURIED LINE - WARNING RISER
- GAS METER
- GAS VALVE (TYP.)
- GAS CURB STOP
- GAS UTILITIES VAULT
- WATER METER
- WATER VALVE (TYP.)
- WATER CURB STOP
- FIRE HYDRANT
- POST INDICATOR VALVE
- IRRIGATION CONTROL VALVE
- YARD HYDRANT
- WATER UTILITIES MANHOLE
- WATER UTILITIES VAULT
- WELL
- IRRIGATION SIDEWALK CROSSING
- LAWN SPRINKLER HEAD
- POWER POLE/ UTILITY POLE
- LIGHT POLE
- TRANSFORMER PAD
- ELECTRICAL BOX
- AIR CONDITIONING UNIT
- ELECTRICAL METER
- GUY ANCHOR
- ELECTRICAL UTILITIES MANHOLE
- ELECTRICAL PANEL
- ELECTRIC UTILITIES VAULT
- YARD LIGHT
- STORM DRAINAGE MANHOLE
- ROUND STORM DRAINAGE INLET
- SQUARE/RECTANGULAR STORM INLET
- YARD DRAIN
- DOWNSPOUT
- SANITARY SEWER MANHOLE
- LIFT STATION MANHOLE
- CLEANOUT
- DECIDUOUS TREE
- CONIFEROUS TREE
- BUSH (DECIDUOUS)
- BUSH (CONIFEROUS)
- BOULDER
- HORIZONTAL CONTROL POINT
- BENCHMARK
- BOUNDARY MONUMENT
- ADA SYMBOL
- FINISHED FLOOR ELEVATION
- POST/FENCE GATE
- BOLLARD
- MAILBOX
- SINGLE-POST SIGN
- RIGHT OF WAY MARKER
- SOIL BORING
- FLAGPOLE
- WATER LEVEL
- CONCRETE MATERIAL
- PAVEMENT MATERIAL
- GRAVEL/STONE MATERIAL
- BUILDING (ENCLOSED)
- BUILDING (OPEN-AIR CANOPY)
- **NEW VALVE**
- **NEW FIRE HYDRANT**
- **NEW FLUSH HYDRANT**
- **NEW WET SADDLE AND VALVE BODY**
- **NEW PLUG**
- **NEW LINE STOP**
- **NEW CUT AND CAP**
- **NEW SANITARY MH**
- **NEW METER PIT**

For Public Viewing Only - Not for Downloading

COMMONWEALTH ENGINEERS, INC.
A wealth of resources to create a common goal.
https://commonwealthengineers.com/

RYAN M. LAREAU REGISTERED No. 11800145 STATE OF INDIANA PROFESSIONAL ENGINEER

Signature 7-7-25 Date

CITY OF RENSSELAER
JASPER COUNTY, IN

7TH STREET IMPROVMENTS

© 2025 BY COMMONWEALTH ENGINEERS, INC. ALL RIGHTS RESERVED. REPRODUCTION BY ANY METHOD IN WHOLE OR IN PART WITHOUT PERMISSION IS PROHIBITED

Indiana811 Know what's below. 811 before you dig. 1-800-382-5544 (ITS THE LAW)

No.	Submittal / Revision	By	Date

Designed By:	Drawn By:	Checked By:
RML	JML	RM
Issue Date:	Project No:	Scale:
---	H25033	AS SHOWN

GENERAL ABBREVIATIONS, LEGENDS, SYMBOLS, AND NOTES

Drawing No: G3

Sheet: 03 OF 26

File: Z:\SHARED\IN CLIENTS M-Z\RENSSELAER\D H25033 - 7TH STREET IMPROVEMENTS\06 CAD\A CURRENT FILES\1 DRAWINGS\02-GENERAL DRAWINGS.DWG
Saved: 7/7/2025 1:53:18 PM Plotted: 7/7/2025 2:08:21 PM Current User: Joseph Lopez LastSavedBy: jlopez

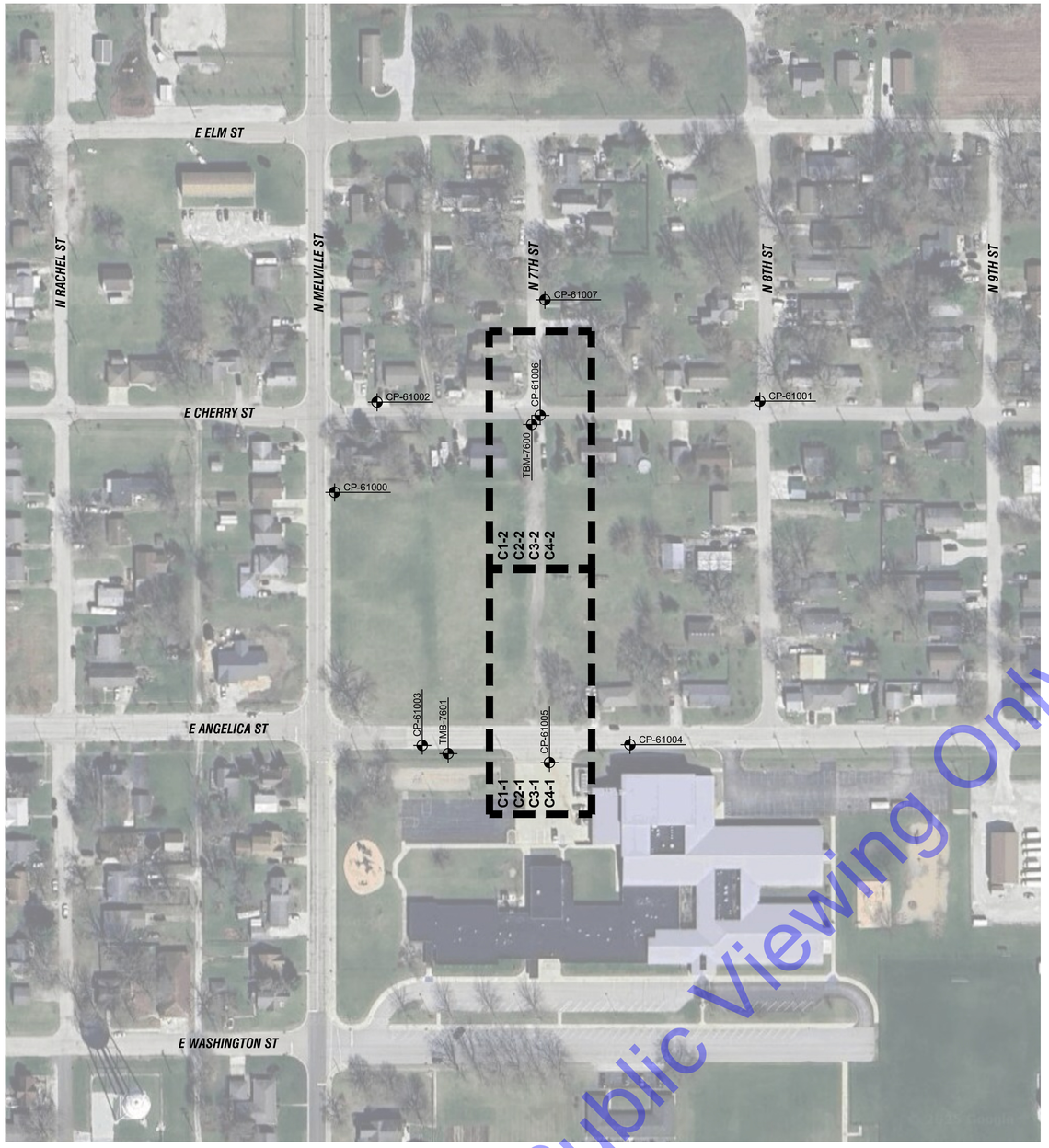

PLAN VIEW

SCALE: 1"=200'-0"

0 200' 400'

CONTROL POINT INFORMATION

IDENTIFIER	NORTHING	EASTING	DESCRIPTION
CP-61000	2073267.206	2936630.137	MAG NAIL
CP-61001	2073397.981	2937239.985	CUT "X"
CP-61002	2073396.661	2936691.044	MAG NAIL
CP-61003	2072904.025	2936755.785	MAG NAIL
CP-61004	2072904.949	2937053.777	MAG NAIL
CP-61005	2072879.242	2936938.306	CUT "X"
CP-61006	2073377.451	2936925.014	MAG NAIL
CP-61007	2073543.436	2936931.846	MAG NAIL

TEMPORARY BENCHMARK INFORMATION

IDENTIFIER	ELEVATION	DESCRIPTION
TBM-7600	663.706	TMB / CHISEL X NORTH BOLT FIRE HYDRANT SOUTHWEST INTERSECTION OF 7TH ST AND CHERRY ST
TBM-7601	661.468	TBM / RAILROAD SPIKE N SIDE OF POWER POLE 0305

Project coordinates are based on the following:
HORIZONTAL-US State plane coordinates: NAD83 *(North American Datum)* Indiana West Zone (1302)
VERTICAL- USGS 1988 NAVD (North American Vertical Datum)-per GPS observations (Not verified by physical location of published USGS monuments)

For Public Viewing Only - Not for Downloading

COMMONWEALTH ENGINEERS, INC.
A wealth of resources to make a common goal.
https://commonwealthengineers.com/

RYAN M. LAREAU
REGISTERED
No. 11800145
STATE OF INDIANA
PROFESSIONAL ENGINEER

Signature 7-7-25 Date

CITY OF RENSSELAER
JASPER COUNTY, IN

7TH STREET IMPROVMENTS

© 2025 BY COMMONWEALTH ENGINEERS, INC. ALL RIGHTS RESERVED. REPRODUCTION BY ANY METHOD IN WHOLE OR IN PART WITHOUT PERMISSION IS PROHIBITED

Indiana 811
Know what's below. 811 before you dig.
1-800-382-5544
(ITS THE LAW)

No.	Submittal / Revision	By	Date

Designed By:	Drawn By:	Checked By:
RML	JML	RM
Issue Date:	Project No:	Scale:
---	H25033	AS SHOWN

SURVEY DATA AND DRAWING INDEX MAP

Drawing No:
G4

Sheet: 04 OF 26

File: Z:\SHAREDIN CLIENTS M-Z\RENSSELAER\H25033 - 7TH STREET IMPROVEMENTS\06 CADA CURRENT FILES\1 DRAWINGS\02-GENERAL DRAWINGS.DWG
Saved: 7/7/2025 1:53:18 PM Plotted: 7/7/2025 2:08:25 PM Current User: Joseph Lopez LastSavedBy: jlopez

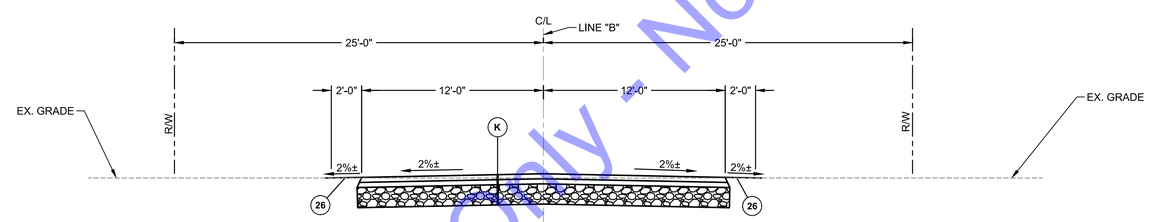

TYPICAL CROSS SECTION

STA. 10+37.00 TO 14+30.00 LINE "B"

Scale: 1"=5'

LEGEND:

(K1) 1.5" 165#/SYD HMA SURFACE, TYPE B, ON
2.5" 275#/SYD HMA BASE, TYPE B, ON
8" COMPACTED AGGREGATE BASE NO. 53

(26) MULCHED SEEDING, U

For Public Viewing Only - Not for Downloading

COMMONWEALTH ENGINEERS, INC.
A wealth of resources to make a common goal.
https://commonwealthengineers.com/

RYAN M. LAREAU
REGISTERED
No. 11800145
STATE OF INDIANA
PROFESSIONAL ENGINEER

Signature 7-7-25 Date

CITY OF RENSSELAER
JASPER COUNTY, IN

7TH STREET IMPROVMENTS

© 2025 BY COMMONWEALTH ENGINEERS, INC. ALL RIGHTS RESERVED. REPRODUCTION BY ANY METHOD IN WHOLE OR IN PART WITHOUT PERMISSION IS PROHIBITED

Indiana811
Know what's below. 811 before you dig.
1-800-382-5544
(ITS THE LAW)

No.	Submittal / Revision	By	Date

Designed By:	Drawn By:	Checked By:
RML	JML	RM
Issue Date: ---	Project No: H25033	Scale: AS SHOWN

TYPICAL CROSS SECTION

Drawing No:
TS1

Sheet: 05 OF 26

File: Z:\SHAREDIN CLIENTS MAZ\RENSSELAER\H25033 - 7TH STREET IMPROVEMENTS\06 CADA CURRENT FILES\1 DRAWINGS\03- EROSION CONTROL DRAWINGS.DWG
Saved: 7/7/2025 1:53:14 PM Plotted: 7/7/2025 2:06:35 PM Current User: Joseph Lopez LastSavedBy: jlopez

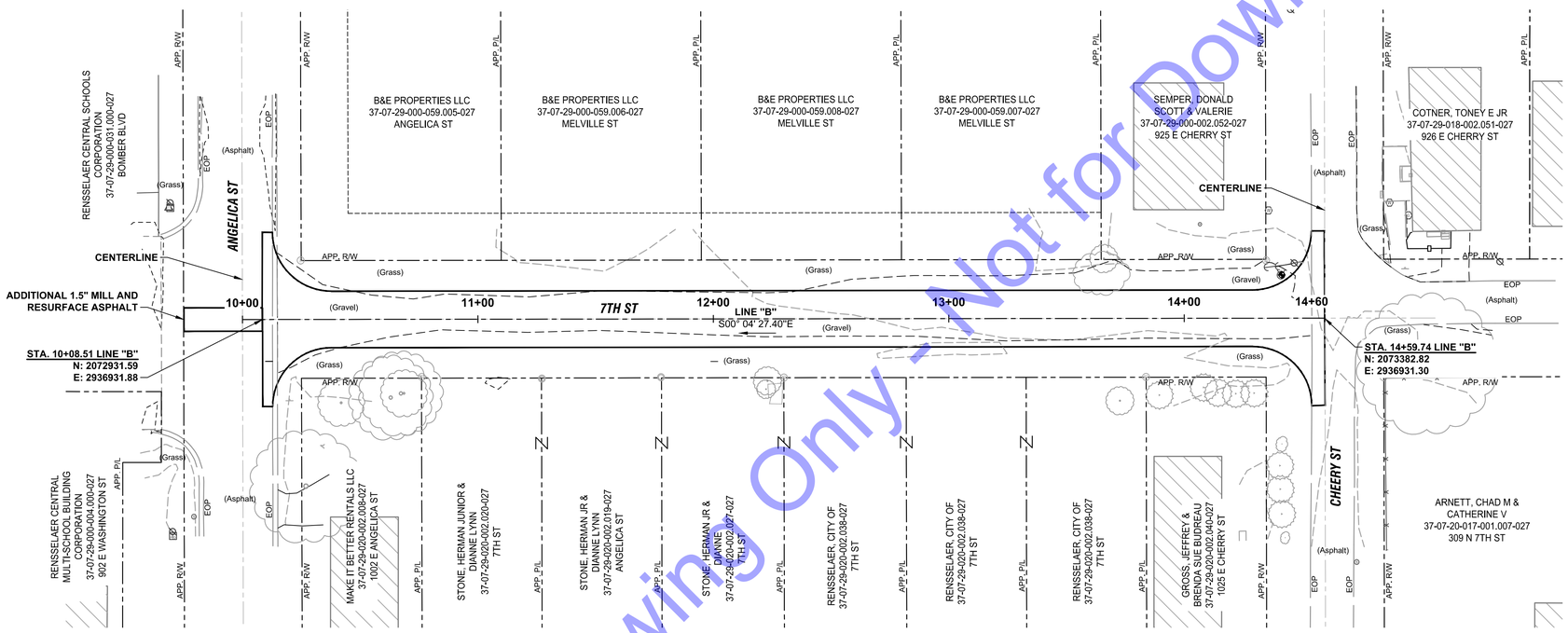

PLAN VIEW

SCALE: 1"=30'-0"

0 30' 60'

For Public Viewing Only - Not for Downloading

File: Z:\SHAREDIN CLIENTS IN-Z\RENSSELAER\D H25033 - 7TH STREET IMPROVEMENTS\06 CAD\A CURRENT FILES\1 DRAWINGS\03- EROSION CONTROL DRAWINGS.DWG
Saved: 7/7/2025 1:53:14 PM Plotted: 7/7/2025 2:08:44 PM Current User: Joseph Lopez LastSavedBy: jlopez

COMMONWEALTH ENGINEERS, INC.
A wealth of resources to create a common goal.
https://commonwealthengineers.com/

RYAN M. LAREAU
REGISTERED No. 11800145 STATE OF INDIANA
PROFESSIONAL ENGINEER

Signature 7-7-25 Date

CITY OF RENSSELAER
JASPER COUNTY, IN

7TH STREET IMPROVMENTS

© 2025 BY COMMONWEALTH ENGINEERS, INC. ALL RIGHTS RESERVED. REPRODUCTION BY ANY MEANS WHOLE OR IN PART WITHOUT PERMISSION IS PROHIBITED

Indiana811
Know what's below. 811 before you dig.
1-800-382-5544
(ITS THE LAW)

No.	Submittal / Revision	By	Date

Designed By:	Drawn By:	Checked By:
RML	JML	RM
Issue Date:	Project No:	Scale:
---	H25033	AS SHOWN

GEOMETRIC LAYOUT PLAN

Drawing No:
GL1

Sheet: 06 OF 26

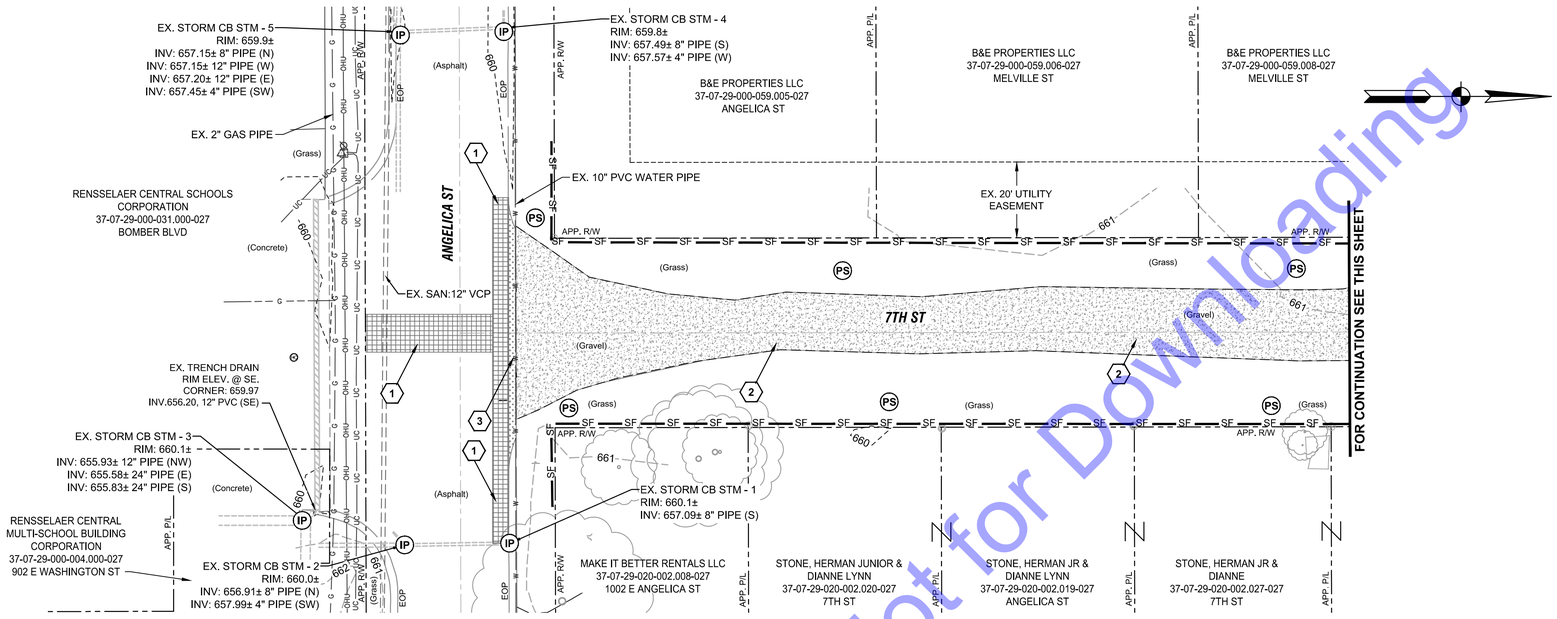

PLAN VIEW

SCALE: 1"=20'-0"

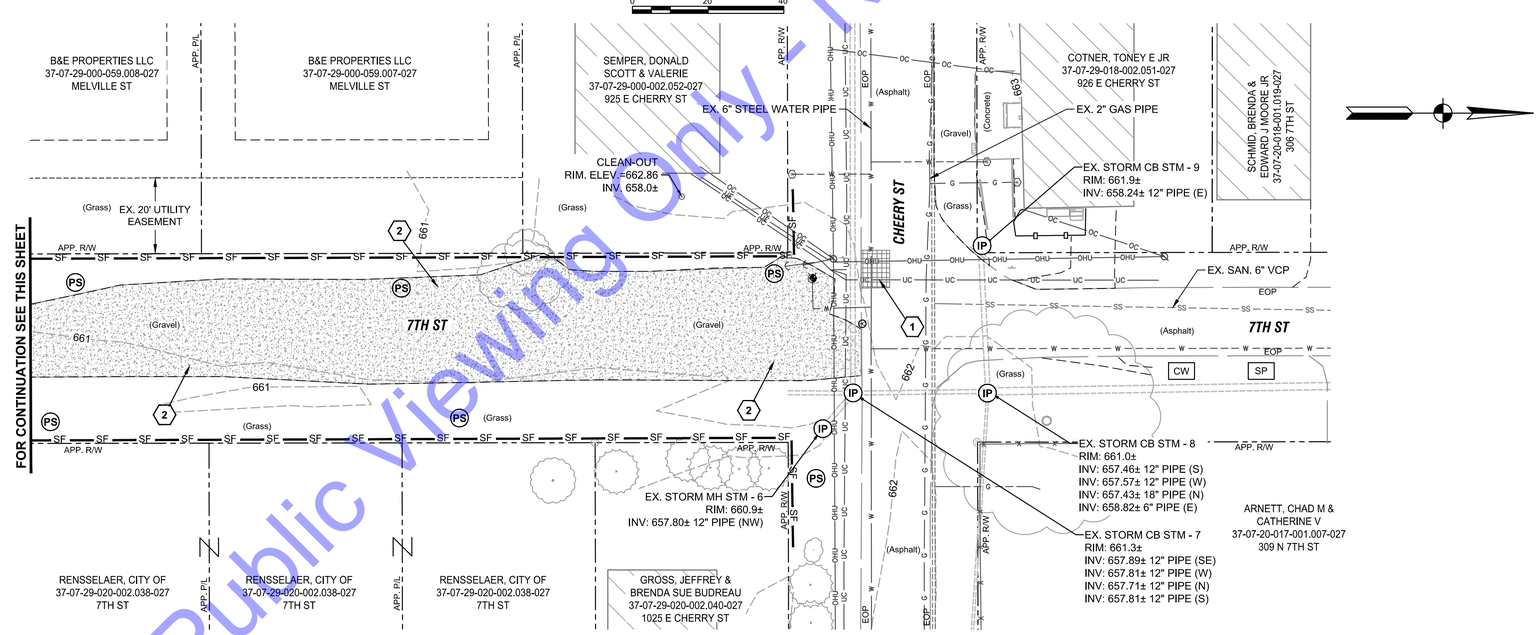

PLAN VIEW

SCALE: 1"=20'-0"

DEMOLITION AND RESTORATION KEYNOTES:

1. REMOVE ASPHALT PAVEMENT, TRENCH RESTORATION, AGGREGATE BASE AND ASPHALT BASE REPLACEMENT - STANDARD DUTY (SEE DETAIL, DWG. C4-3).
2. REMOVE GRAVEL SURFACE
3. REMOVE CONCRETE CURB

EROSION CONTROL LEGEND:

- IP — STORM INLET PROTECTION
- PS — PERMANENT SEEDING
- SF — SILT FENCE
- CW — CONCRETE WASHOUT
- SP — STOCKPILE

GENERAL NOTES:

1. CONTRACTOR SHALL PROVIDE ADDITIONAL EROSION CONTROL MEASURES AS SPECIFIED IN THE DETAILED SPECIFICATIONS, INCLUDING BUT NOT LIMITED TO CONCRETE WASHOUT STATIONS, TEMPORARY CONSTRUCTION ENTRANCES, TEMPORARY SEEDING, ETC. AS REQUIRED DURING THE DURATION OF THE PROJECT TO MAINTAIN COMPLIANCE WITH THE GENERAL STORM WATER CONSTRUCTION PERMIT. CONTRACTOR SHALL ADHERE TO ALL REQUIREMENTS OF THE GENERAL STORM WATER CONSTRUCTION PERMIT, INCLUDING PROVIDING REQUIRED NOTIFICATIONS TO THE REQUIRED AGENCIES.
2. SEE DRAWING EC1 & EC2 FOR EROSION CONTROL DETAILS.

For Public Viewing Only - Not for Downloading

COMMONWEALTH ENGINEERS, INC.
A wealth of resources to create a common goal.
https://commonwealthengineers.com/

REGISTERED No. 11800145 STATE OF INDIANA
RYAN M. LAREAU
PROFESSIONAL ENGINEER
Signature 7-7-25 Date

CITY OF RENSSELAER
JASPER COUNTY, IN

7TH STREET IMPROVMENTS

© 2025 BY COMMONWEALTH ENGINEERS, INC. ALL RIGHTS RESERVED. REPRODUCTION OR DISTRIBUTION, IN WHOLE OR IN PART WITHOUT PERMISSION IS PROHIBITED

Indiana811 Know what's below. 811 before you dig. 1-800-382-5544 (ITS THE LAW)

No.	Submittal / Revision	By	Date

Designed By:	Drawn By:	Checked By:
RML	JML	RM
Issue Date:	Project No:	Scale:
---	H25033	AS SHOWN

DEMOLITION, RESTORATION AND EROSION CONTROL PLAN VIEWS

Drawing No: DR1

Sheet: 07 OF 26

File: Z:\SHARED\IN CLIENTS M-Z\RENSSELAER\D H25033 - 7TH STREET IMPROVEMENTS\06 CAD\A CURRENT FILES\1 DRAWINGS\05- EROSION CONTROL DRAWINGS.DWG
Saved: 7/7/2025 1:53:14 PM Plotted: 7/7/2025 2:09:02 PM Current User: Joseph Lopez LastSavedBy: jlopez

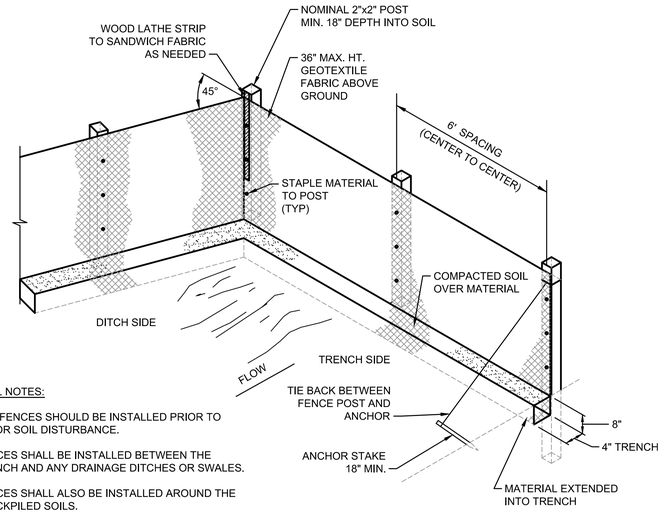

GENERAL NOTES:

1. SILT FENCES SHOULD BE INSTALLED PRIOR TO MAJOR SOIL DISTURBANCE.
2. FENCES SHALL BE INSTALLED BETWEEN THE TRENCH AND ANY DRAINAGE DITCHES OR SWALES.
3. FENCES SHALL ALSO BE INSTALLED AROUND THE STOCKPILED SOILS.
4. THE GEOTEXTILE SHALL BE FREE FROM DEFECTS, TEARS, PUNCTURES, FLAWS, DETERIORATION OR DAMAGE INCURRED DURING MANUFACTURE, TRANSPORTATION, STORAGE, OR INSTALLATION.
5. TIE BACKS SHALL BE PLACED AS REQUIRED.

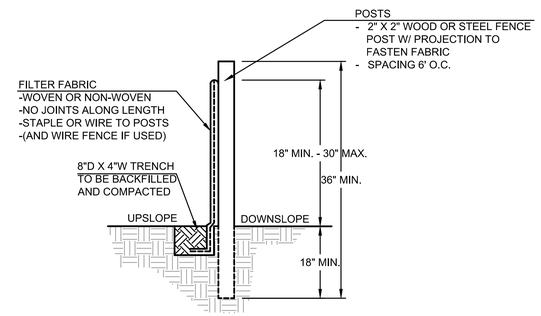

INSTALLATION:
1. THE BOTTOM 1' OF THE FENCE SHALL BE BURIED IN THE TRENCH ON THE UPSLOPE SIDE.
2. FENCE SHALL BE INSTALLED ALONG LEVEL GRADES, NOT ACROSS FLOW CHANNELS.
3. IF OPTIONAL SUPPORT WIRE FENCE IS USED, POST SPACING MAY BE EXTENDED TO 8' O.C.

MAINTENANCE:
1. INSPECT SILT FENCE PERIODICALLY (WEEKLY) AND AFTER EACH STORM EVENT.
2. IF FABRIC IS TORN OR DAMAGED OR IN ANY WAY BECOMES INEFFECTIVE, REPLACE THE AFFECTED PORTION IMMEDIATELY.
3. REMOVE DEPOSITED SEDIMENT WHEN IT REACHES HALF THE HEIGHT OF THE FENCE, OR IT IS CAUSING THE FABRIC TO BULGE.
4. TAKE CARE NOT TO UNDERMINE THE FENCE DURING SEDIMENT REMOVAL.
5. AFTER THE CONTRIBUTING AREA HAS BEEN STABILIZED, REMOVE THE FENCE AND REMAINING SEDIMENT, BRING THE DISTURBED AREA TO GRADE, AND STABILIZE.

SILT FENCE DETAIL

NOT TO SCALE

GENERAL EROSION AND SEDIMENT CONTROL NOTES

1. ALL EROSION AND SEDIMENT CONTROL PRACTICES SHALL BE IN ACCORDANCE WITH THE INDIANA STORM WATER QUALITY MANUAL FROM THE INDIANA DEPARTMENT OF ENVIRONMENTAL MANAGEMENT AND LOCAL EROSION AND SEDIMENT CONTROL ORDINANCE, OR SWCD.
2. THE NOTICE OF INTENT (NOI) AND PUBLIC NOTICE FOR THE PROJECT SHALL BE POSTED ON A SIGN INSTALLED AT OR NEAR THE SITE CONSTRUCTION TRAILER. THE NOI SHALL LIST THE CONTACT INFORMATION FOR THE SITE CONTACT PERSON. THE SIGN AND INFORMATION SHALL BE MAINTAINED AND REMAIN LEGIBLE THROUGHOUT CONSTRUCTION.
3. A COPY OF THIS EROSION AND SEDIMENT CONTROL PLAN AND THE EROSION AND SEDIMENT CONTROL REPORT SHALL BE AVAILABLE AT THE PROJECT SITE THROUGHOUT THE ENTIRE CONSTRUCTION PERIOD.
4. THE CONTRACTOR SHALL CONTROL WASTE, GARBAGE, DEBRIS, WASTEWATER, AND OTHER SUBSTANCES ON THE SITE SO THEY WILL NOT BE TRANSPORTED FROM THE SITE BY THE ACTION OF WIND, STORM WATER RUNOFF, OR OTHER FORCES. PROPER DISPOSAL OR MANAGEMENT OF ALL WASTES AND UNUSED BUILDING MATERIAL APPROPRIATE TO THE NATURE OF THE WASTE OR MATERIAL IS REQUIRED.
5. PUBLIC OR PRIVATE ROADWAYS SHALL BE KEPT CLEAR OF ACCUMULATED SEDIMENT. ALL SEDIMENT THAT IS CLEARED MUST BE RETURNED TO THE LIKELY POINT OF ORIGIN OR OTHER SUITABLE LOCATION. CLEARING OF LARGE AMOUNTS OF SEDIMENT SHALL NOT INCLUDE FLUSHING THE AREA WITH WATER.
6. MINIMIZE THE EXPOSURE OF BARE EARTH BY LIMITING THE WORK AREA TO THAT NECESSARY TO PERFORM THE WORK, AND BY PROPER SCHEDULING OF MANPOWER AND EQUIPMENT.
7. ALL EROSION AND SEDIMENT CONTROL MEASURES SHALL BE INSPECTED, CLEANED, AND MAINTAINED FOLLOWING EACH STORM EVENT.
8. WHEREVER POSSIBLE, MAINTAIN EXISTING VEGETATIVE COVER. USE NON-VEGETATIVE MATERIAL INCLUDING MULCH, EROSION BLANKETS, OR STONE TO CONTROL EROSION FROM DISTURBED AREAS.
9. A LOG SHALL BE MAINTAINED OF ALL INSPECTIONS (WEEKLY, AND FOLLOWING STORM EVENTS), MAINTENANCE AND REPAIR OF EROSION AND SEDIMENT CONTROL MEASURES. THE LOG SHALL BE MAINTAINED ON SITE AND BE AVAILABLE UPON REQUEST TO THE OWNER'S REPRESENTATIVES AND THE OPERATING AUTHORITIES HAVING JURISDICTION OVER THE SITE.

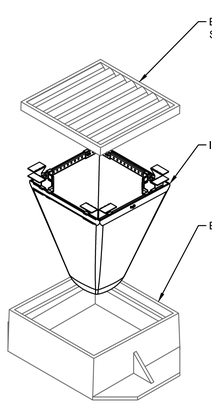

NOTE:
SEDIMENT BAG

HYDRAULIC REQUIREMENTS:
OPENING PER ASTM D-4751 -20 US STD. SIEVE
FLOW RATE ASTM D-4491 - 200 GPM/FT2

PHYSICAL PROPERTIES:
UV RESISTANCE ASTM D-4355
TENSILE STRENGTH AND ELONGATION ASTM D-4632

TYPICAL INSTALLATION UNDER INLET

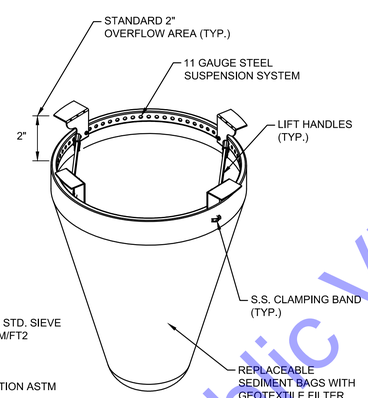

ROUND/SQUARE INLET FILTER SYSTEM

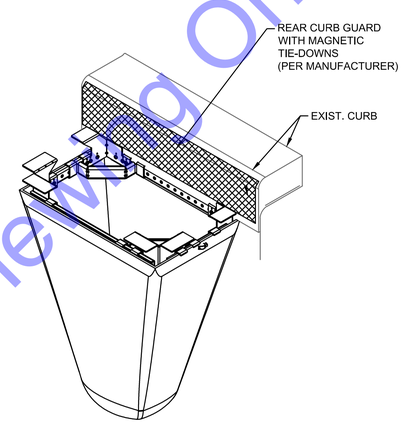

COMBINATION INLET FILTER
FOR CURB HOODS

GENERAL NOTES:

1. TO BE INSTALLED AT EXISTING STANDARD INLET GRATES IN PAVED AREAS DOWNSTREAM OF EXCAVATION.
2. INSTALL INLET FILTER ONTO LOAD BEARING LIP OF CASTING OR CONCRETE STRUCTURE AND PER MANUFACTURER'S RECOMMENDATIONS.
3. FOR CURB BOX INLETS, CURB BACK MUST HAVE FILTER ATTACHED PER MANUFACTURER'S RECOMMENDATION OR CONTRACTOR MUST CREATE A DAM TO DIRECT RUNOFF INTO THE SEDIMENT BAG.

INLET FILTER EROSION CONTROL DETAIL FOR STANDARD SIZED STORM STRUCTURES

NOT TO SCALE

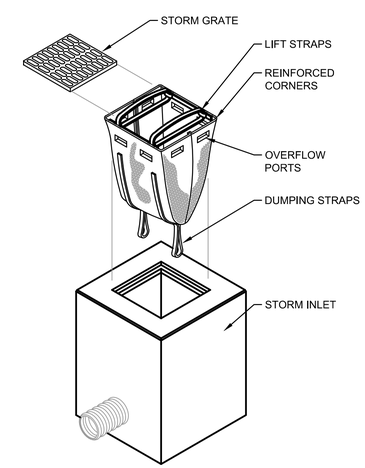

INSERT (BASKET) INLET PROTECTION DETAIL

NOT TO SCALE

For Public Viewing Only - Not for Downloading

COMMONWEALTH ENGINEERS, INC.
A wealth of resources to make a common goal.
https://commonwealthengineers.com/

RYAN M. LAREAU
REGISTERED
No. 11800145
STATE OF INDIANA
PROFESSIONAL ENGINEER

Signature 7-7-25 Date

CITY OF RENSSELAER
JASPER COUNTY, IN

7TH STREET IMPROVMENTS

© 2025 BY COMMONWEALTH ENGINEERS, INC. ALL RIGHTS RESERVED. REPRODUCTION BY ANY METHOD IN WHOLE OR IN PART WITHOUT PERMISSION IS PROHIBITED

Indiana811 Know what's below. 811 before you dig. 1-800-382-5544 (ITS THE LAW)

No.	Submittal / Revision	By	Date

Designed By:	Drawn By:	Checked By:
RML	JML	RM
Issue Date:	Project No:	Scale:
---	H25033	AS SHOWN

EROSION CONTROL DETAILS

Drawing No:
EC1

Sheet: 08 OF 26

File: Z:\SHAREDIN CLIENTS MA-Z\RENSSELAER\H25033 - 7TH STREET IMPROVEMENTS\06 CADA CURRENT FILES\1 DRAWINGS\03- EROSION CONTROL DRAWINGS.DWG
Saved: 7/7/2025 1:53:14 PM Plotted: 7/7/2025 2:09:05 PM Current User: Joseph Lopez LastSavedBy: jlopez

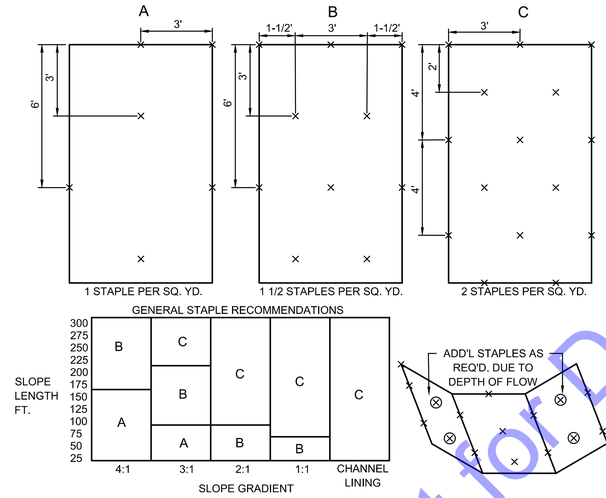

SPECIFICATIONS

EFFECTIVE LIFE

- THE FUNCTIONAL LIFE OF AN EROSION CONTROL BLANKET IS DEPENDENT ON THE MATERIALS USED.

ANCHORING

- STAPLES, PINS OR STAKES USED TO PREVENT MOVEMENT OR DISPLACEMENT OF BLANKET. (FOLLOW MANUFACTURER'S RECOMMENDATIONS FOR SPECIFIC APPLICATIONS.)

MATERIALS

- ORGANIC (STRAW, EXCELSIOR, WOVEN PAPER, COCONUT FIBER, ETC.) OR SYNTHETIC MULCH INCORPORATED WITH A POLYPROPYLENE, NATURAL FIBER OR SIMILAR NETTING MATERIAL. (THE NETTING MAY BE BIODEGRADABLE, PHOTODEGRADABLE OR PERMANENT.)

  NOTE: SOME EROSION CONTROL BLANKET NETTINGS MAY POSE A THREAT TO CERTAIN SPECIES OF WILDLIFE IF THEY BECOME ENTANGLED IN THE NETTING MATRIX.

- 6-12 INCH STAPLES, PINS, OR STAKES.

INSTALLATION

1. SELECT THE TYPE AND WEIGHT OF EROSION CONTROL BLANKET TO FIT THE SITE CONDITIONS (E.G., SLOPE, CHANNEL, FLOW VELOCITY) PER THE MANUFACTURER'S RECOMMENDATIONS.
2. PREPARE THE SEEDBED, ADD SOIL AMENDMENTS, AND PERMANENTLY SEED THE AREA IMMEDIATELY FOLLOWING SEEDBED PREPARATION.
3. LAY EROSION CONTROL BLANKETS ON THE SEEDED AREA SO THAT THEY ARE IN CONTINUOUS CONTACT WITH THE SOIL WITH EACH UP-SLOPE OR UP-STREAM BLANKET OVERLAPPING THE DOWN-SLOPE OR DOWN-STREAM BLANKET BY AT LEAST EIGHT INCHES, OR FOLLOW MANUFACTURER'S RECOMMENDATIONS.
4. TUCK THE UPPERMOST EDGE OF THE UPPER BLANKETS INTO A CHECK SLOT (SLIT TRENCH), BACKFILL WITH SOIL AND TAMP DOWN. IN CERTAIN APPLICATIONS, THE MANUFACTURER MAY REQUIRE ADDITION CHECK SLOTS AT SPECIFIC LOCATIONS DOWN SLOPE FROM THE UPPERMOST EDGE OF THE UPPER BLANKETS.
5. ANCHOR THE BLANKETS IN PLACE BY DRIVING STAPLES, PINS, OR STAKES THROUGH THE BLANKET AND INTO THE UNDERLYING SOIL. FOLLOW AN ANCHORING PATTERN APPROPRIATE FOR THE SITE CONDITIONS AND AS RECOMMENDED BY THE MANUFACTURER.

MAINTENANCE

- INSPECT WITHIN 24 HOURS OF EACH RAIN EVENT AND AT LEAST ONCE EVERY SEVEN CALENDAR DAYS.
- CHECK FOR EROSION OR DISPLACEMENT OF THE BLANKET.
- IF ANY AREA SHOWS EROSION, PULL BACK THAT PORTION OF THE BLANKET COVERING THE ERODED AREA, ADD SOIL AND TAMP, RESEED THE AREA, REPLACE AND STAPLE THE BLANKET.

NOTES

CHANNEL LININGS UTILIZE STAPLE PATTERN "C" WITH ADDITIONAL STAPLES ON SIDE SLOPES AT PROJECTED WATER LINE.

STAPLE PATTERNS APPLY TO ALL NORTH AMERICAN GREEN EROSION CONTROL BLANKETS. STAPLE PATTERNS MAY VARY DEPENDING UPON SOIL TYPE AND AVERAGE RAINFALL.

AT SLOPE LENGTHS GREATER THAN 300 FEET OR WHERE DRAINAGE OVER LARGE AREAS IS DIRECTED ONTO THE BLANKETS, STAPLE PATTERN "C" SHOULD BE UTILIZED.

EROSION CONTROL BLANKET

NOT TO SCALE

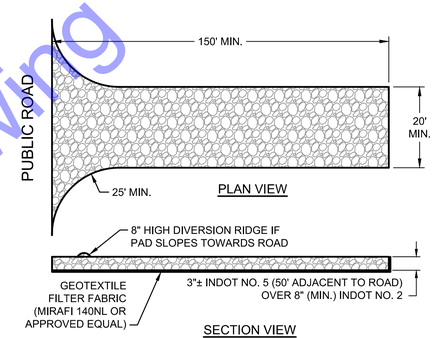

MAINTENANCE:

1. INSPECT DAILY AND AFTER EACH STORM EVENT OR HEAVY USE.
2. RESHAPE AS NEEDED FOR DRAINAGE AND RUNOFF CONTROL.
3. TOPDRESS WITH CLEAN STONE AS REQUIRED. MAINTAIN MINIMUM DEPTH THROUGHOUT CONSTRUCTION.
4. IMMEDIATELY REMOVE MUD AND SEDIMENT TRACKED OR WASHED ONTO PUBLIC ROADS BY SWEEPING OR BRUSHING. (DO NOT FLUSH AREA WITH WATER UNLESS WATER IS CONVEYED TO SEDIMENT TRAP.)
5. REPAIR ANY BROKEN PAVEMENT IMMEDIATELY.

STABILIZED CONSTRUCTION ENTRANCE DETAIL

NOT TO SCALE

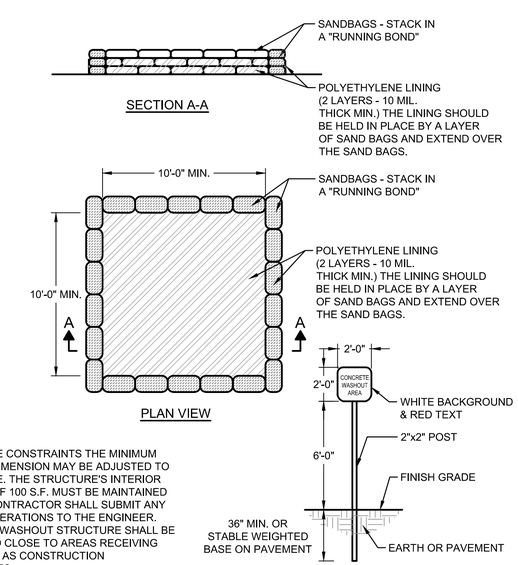

NOTE:
DUE TO SITE CONSTRAINTS THE MINIMUM INTERIOR DIMENSION MAY BE ADJUSTED TO FIT THE SITE. THE STRUCTURE'S INTERIOR FOOTAGE OF 100 S.F. MUST BE MAINTAINED AND THE CONTRACTOR SHALL SUBMIT ANY DESIGN ALTERATIONS TO THE ENGINEER. CONCRETE WASHOUT STRUCTURE SHALL BE RELOCATED CLOSE TO AREAS RECEIVING CONCRETE, AS CONSTRUCTION PROGRESSES.

CONCRETE WASHOUT PIT DETAIL

NOT TO SCALE

For Public Viewing Only - Not for Downloading

COMMONWEALTH ENGINEERS, INC.
A wealth of resources to create a common goal.
https://commonwealthengineers.com/

RYAN M. LAREAU
REGISTERED No. 11800145 STATE OF INDIANA
PROFESSIONAL ENGINEER
Signature 7-7-25 Date

CITY OF RENSSELAER
JASPER COUNTY, IN

7TH STREET IMPROVMENTS

© 2025 BY COMMONWEALTH ENGINEERS, INC. ALL RIGHTS RESERVED. REPRODUCTION BY ANY METHOD IN WHOLE OR IN PART WITHOUT PERMISSION IS PROHIBITED

Indiana 811 Know what's below. 811 before you dig. 1-800-382-5544 (ITS THE LAW)

No.	Submittal / Revision	By	Date

Designed By:	Drawn By:	Checked By:
RML	JML	RM
Issue Date: ---	Project No: H25033	Scale: AS SHOWN

EROSION CONTROL DETAILS

Drawing No: EC2

Sheet: 09 OF 26

File: Z:\SHAREDIN CLIENTS MZ\RENSSELAER\H25033 - 7TH STREET IMPROVEMENTS\06 CADA CURRENT FILES\1 DRAWINGS\03- EROSION CONTROL DRAWINGS.DWG
Saved: 7/7/2025 1:53:14 PM Plotted: 7/7/2025 2:09:18 PM Current User: Joseph Lopez LastSavedBy: jlopez

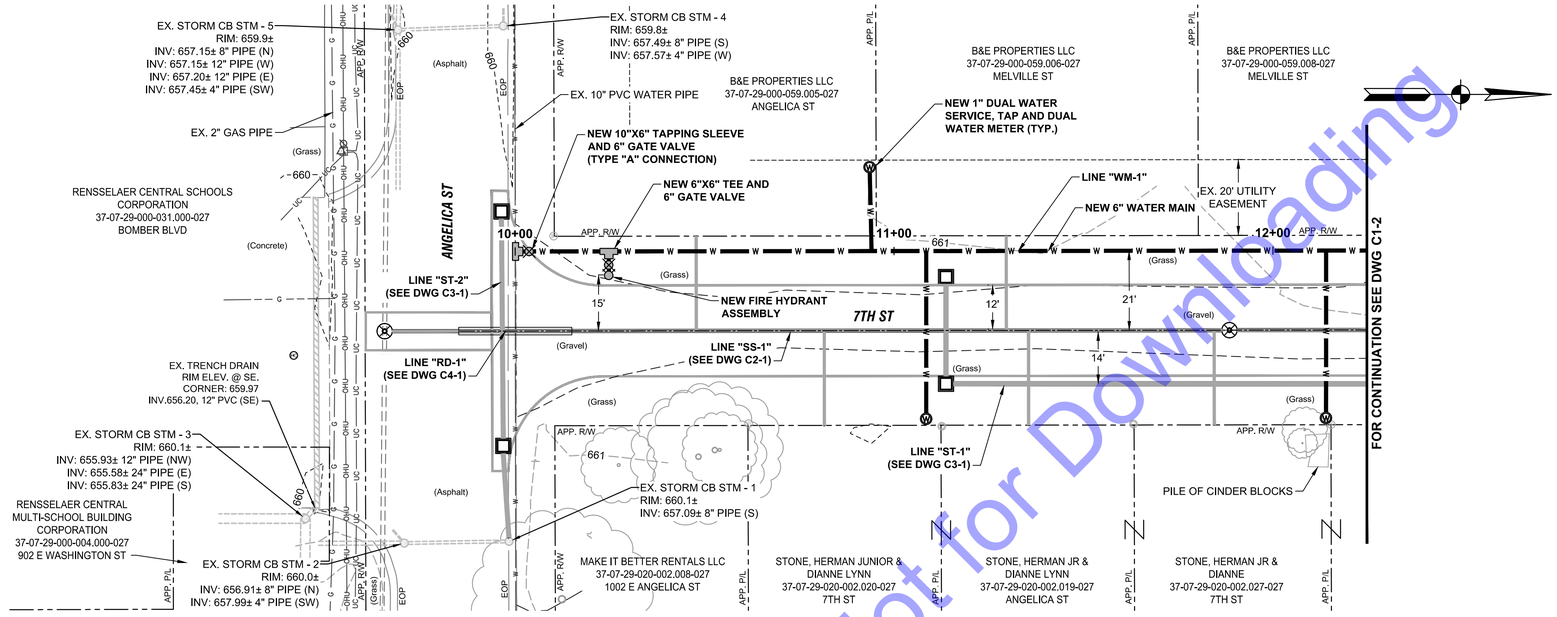

PLAN VIEW - "WM-1"

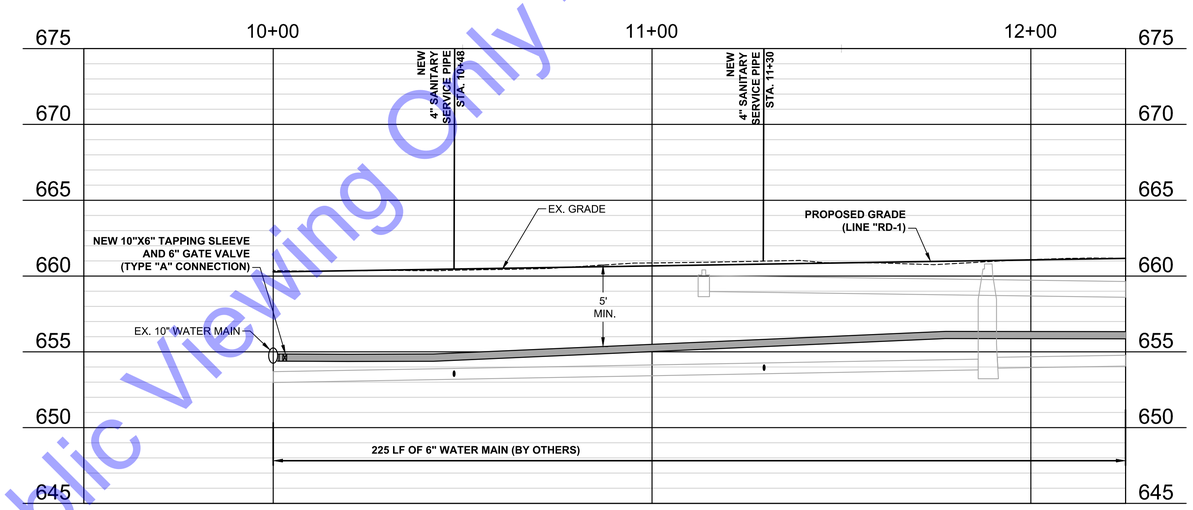

PROFILE VIEW - "WM-1"

HORIZONTAL SCALE: 1" = 20'-0"
0 10' 20' 40' 60'
VERTICAL SCALE: 1"=5'
0 5'

For Public Viewing Only - Not for Downloading

COMMONWEALTH ENGINEERS, INC.
A wealth of resources to create a common goal.
https://commonwealthengineers.com/

RYAN M. LAREAU
REGISTERED No. 11800145 STATE OF INDIANA
PROFESSIONAL ENGINEER
Signature 7-7-25 Date

CITY OF RENSSELAER
JASPER COUNTY, IN

7TH STREET IMPROVMENTS

© 2025 BY COMMONWEALTH ENGINEERS, INC. ALL RIGHTS RESERVED. REPRODUCTION OR USE OF THIS DRAWING IN WHOLE OR IN PART WITHOUT PERMISSION IS PROHIBITED

Indiana811 Know what's below. 811 before you dig. 1-800-382-5544 (ITS THE LAW)

No.	Submittal / Revision	By	Date

Designed By:	Drawn By:	Checked By:
RML	JML	RM
Issue Date:	Project No:	Scale:
---	H25033	AS SHOWN

PLAN AND PROFILE VIEWS - LINE "WM-1"

Drawing No:
C1-1
Sheet: 10 OF 26

File: Z:\SHAREDIN\CLIENTS MA\RENSSELAER\D H25033 - 7TH STREET IMPROVEMENTS\06 CADA\CURRENT FILES\1 DRAWINGS\04- PLAN AND PROFILE DRAWINGS.DWG
Saved: 7/7/2025 2:07:28 PM Plotted: 7/7/2025 2:09:45 PM Current User: Joseph Lopez LastSavedBy: jlopez

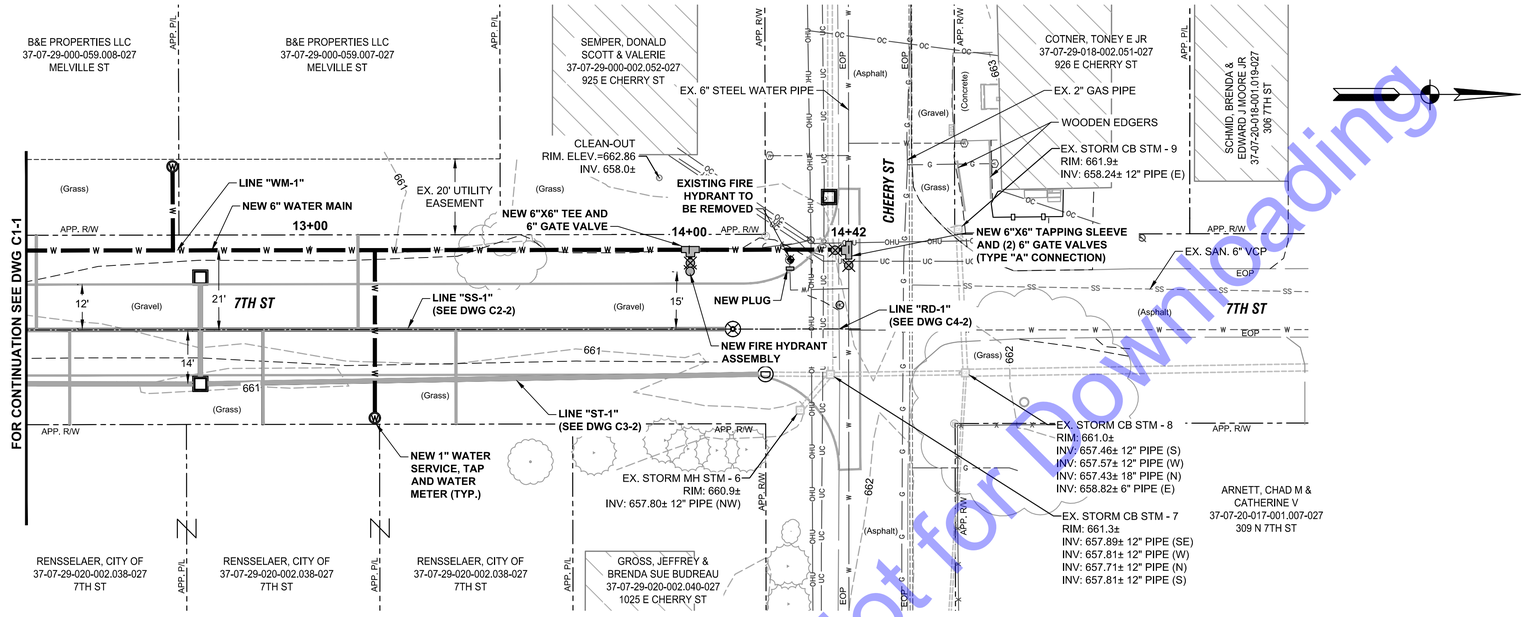

PLAN VIEW - "WM-1"

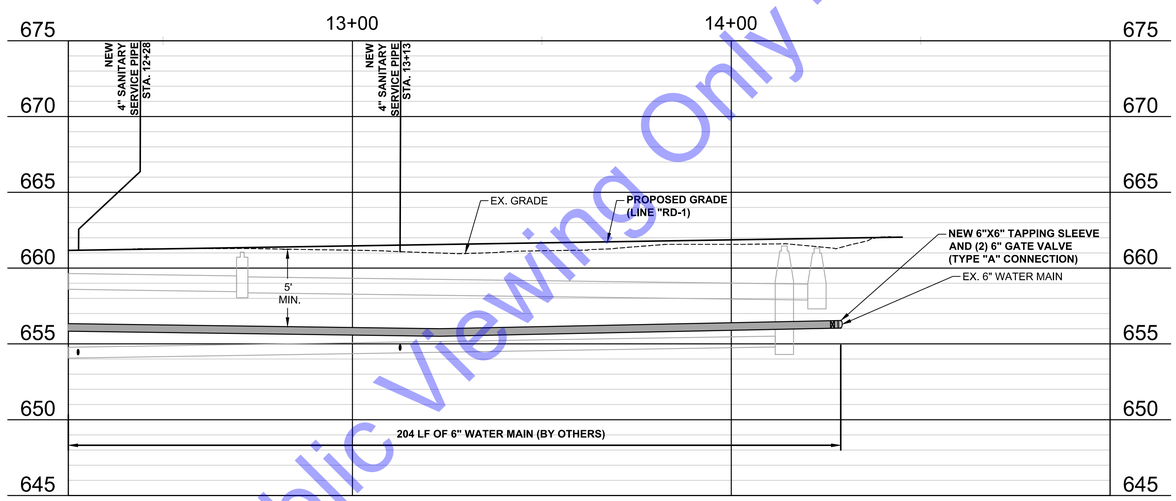

PROFILE VIEW - "WM-1"

HORIZONTAL SCALE: 1" = 20'-0"
0 10' 20' 40' 60'
VERTICAL SCALE: 1"=5'
0 5'

For Public Viewing Only - Not for Downloading

COMMONWEALTH ENGINEERS, INC.
A wealth of resources to create a common good.
https://commonwealthengineers.com/

REGISTERED No. 11800145 STATE OF INDIANA
RYAN M. LAREAU
PROFESSIONAL ENGINEER
Signature 7-7-25 Date

CITY OF RENSSELAER
JASPER COUNTY, IN

7TH STREET IMPROVMENTS

© 2025 BY COMMONWEALTH ENGINEERS, INC. ALL RIGHTS RESERVED. REPRODUCTION BY ANY METHOD IN WHOLE OR IN PART WITHOUT PERMISSION IS PROHIBITED

Indiana811 Know what's below. 811 before you dig. 1-800-382-5544 (ITS THE LAW)

No.	Submittal / Revision	By	Date

Designed By:	Drawn By:	Checked By:
RML	JML	RM
Issue Date:	Project No:	Scale:
---	H25033	AS SHOWN

PLAN AND PROFILE VIEWS - LINE "WM-1"

Drawing No:
C1-2
Sheet: 11 OF 26

File: Z:\SHAREDIN CLIENTS MA-Z\RENSSELAER\D H25033 - 7TH STREET IMPROVEMENTS\06 CADA CURRENT FILES\1 DRAWINGS\04- PLAN AND PROFILE DRAWINGS.DWG
Saved: 7/7/2025 2:16:19 PM Plotted: 7/7/2025 2:17:11 PM Current User: Joseph Lopez LastSavedBy: jlopez

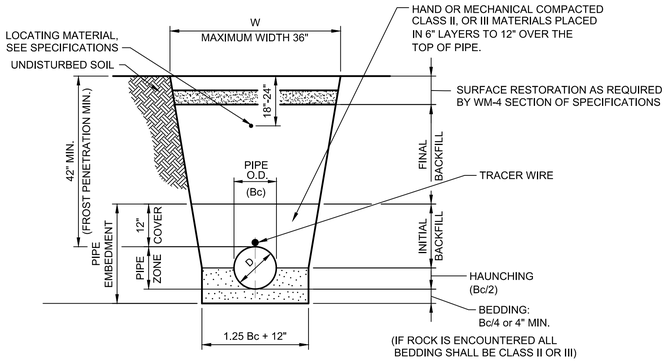

W = MAX. ALLOWABLE TRENCH WIDTH FOR PIPE SHALL NOT TO EXCEED 30 INCHES FOR 4" THROUGH 8" PIPE, 36" FOR 8" THROUGH 12" PIPE.

D = PIPE DIAMETER (INTERNAL)

Bc = PIPE DIAMETER (EXTERNAL)

APPLICATION	BEDDING & HAUNCHING INITIAL BACKFILL	FINAL BACKFILL
GRASSY AREA OR NEW PAVED AREAS	CLASS I, OR II MATERIAL (REFER TO WORKMANSHIP & MATERIALS SPECIFICATIONS	SELECTED EXCAVATED MATERIAL
PAVEMENT AREA OR ANY AREA SUBJECT TO VEHICULAR TRAFFIC	CLASS I, II OR III MATERIAL (REFER TO WORKMANSHIP & MATERIALS SPECIFICATIONS	COMPACTED GRANULAR MATERIAL

NOTES:

1. INITIAL BACKFILL STOPS AT A POINT 12" ABOVE THE TOP OF THE PIPE. BACKFILLING ABOVE THIS POINT SHALL BE IN ACCORDING WITH THE SPECIFICATIONS AND AS REQUIRED BY HEREIN.
2. BEDDING, HUNCHING AND INITIAL BACKFILL SHALL BE CLASS I, II, OR III MATERIALS ACCORDING TO THE WORKMANSHIP AND MATERIALS SPECIFICATIONS.
3. WORK FALLING UNDER THE JURISDICTION OF THE INDIANA DEPARTMENT OF TRANSPORTATION (INDOT) SHALL UTILIZE COMPACTED GRANULAR BACKFILL MATERIAL FOR INITIAL AND FINAL BACKFILL ANYWHERE WITHIN 12 FEET OF THE EDGE OF PAVEMENT.
4. WORK NOT FALLING UNDER THE JURISDICTION OF INDIANA DEPT. OF TRANSPORTATION SHALL UTILIZE COMPACTED GRANULAR BACKFILL MATERIAL FOR INITIAL AND FINAL BACKFILL ANYWHERE WITHIN 5 FEET OF THE EDGE OF PAVEMENT.

TRENCH DETAIL FOR WATER MAIN

NOT TO SCALE

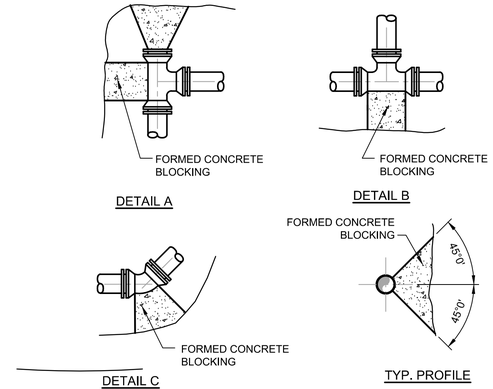

TABLE OF DIMENSIONS FOR CONCRETE BLOCKING

SIZE	TEE				PLUG					90° BEND				45° BEND				22° BEND				11° BEND			
PIPE	L	T	W	D	L	T	W	D	s	L	T	W	D	L	T	W	D	L	T	W	D	L	T	W	D
4"	18"	12"	12"	8"	18"	12"	18"	18"	2"	24"	12"	24"	8"	18"	8"	12"	8"	18"	8"	12"	8"	15"	8"	12"	6"
6"	18"	12"	12"	8"	18"	12"	18"	18"	2"	24"	15"	24"	8"	18"	10"	12"	8"	18"	10"	12"	8"	18"	10"	18"	6"
8"	30"	12"	24"	8"	30"	18"	30"	24"	4"	36"	16"	30"	8"	24"	12"	18"	8"	24"	18"	18"	8"	24"	12"	18"	8"
10"	36"	18"	30"	10"	36"	18"	36"	24"	4"	48"	20"	36"	10"	30"	14"	24"	10"	30"	14"	24"	10"	24"	14"	18"	8"
12"	48"	18"	36"	10"	42"	18"	42"	24"	4"	54"	24"	48"	10"	36"	16"	30"	10"	36"	16"	30"	10"	30"	16"	24"	10"
14"	54"	24"	42"	12"	48"	18"	48"	30"	6"	60"	28"	60"	12"	42"	16"	42"	12"	42"	16"	42"	12"	33"	16"	27"	12"
16"	60"	24"	48"	12"	54"	18"	54"	30"	6"	66"	32"	63"	12"	48"	18"	48"	12"	48"	18"	48"	12"	36"	18"	30"	12"
18"	66"	30"	60"	14"	60"	24"	60"	36"	6"	66"	36"	66"	14"	54"	18"	54"	14"	54"	18"	54"	14"	39"	18"	33"	14"
20"	72"	30"	60"	14"	66"	24"	66"	36"	8"	72"	40"	69"	14"	60"	20"	60"	14"	60"	20"	60"	14"	42"	20"	36"	14"
24"	84"	36"	72"	18"	78"	30"	78"	42"	8"	84"	48"	75"	18"	72"	22"	72"	18"	72"	22"	72"	18"	48"	22"	42"	18"
30"	96"	42"	78"	24"	96"	36"	78"	48"	10"	108"	54"	96"	24"	84"	24"	72"	24"	72"	26"	72"	24"	54"	26"	48"	24"
42"	144"	48"	96"	36"	144"	42"	96"	60"	10"	180"	66"	144"	36"	120"	36"	96"	36"	84"	34"	72"	36"	60"	34"	48"	36"

NOTES:

1. FOR TEE WITH BRANCH UNEQUAL TO RUN USE TEE TYPE KICKER WITH D, L, AND W DIMENSIONS THE SAME AS THOSE FOR PLUG WITH SAME DIAMETER AS BRANCH OF TEE, SELECT "T" DIMENSIONS FROM TEE TABLE UNDER COLUMN HEADED BY THE SIZE OF THE BRANCH
2. IF EXACT SIZE PIPE BLOCKING IS NOT SHOWN USE NEXT LARGER SIZE
3. DEPTH "D" MAY BE GREATER THAN SPECIFIED TO ALLOW WORKING SPACE
4. BLOCKING MUST BE PLACED AGAINST UNDISTURBED EARTH OR ROCK
5. CONCRETE BLOCKING SHALL BE CLASS "B"

THRUST BLOCKING DETAIL

NOT TO SCALE

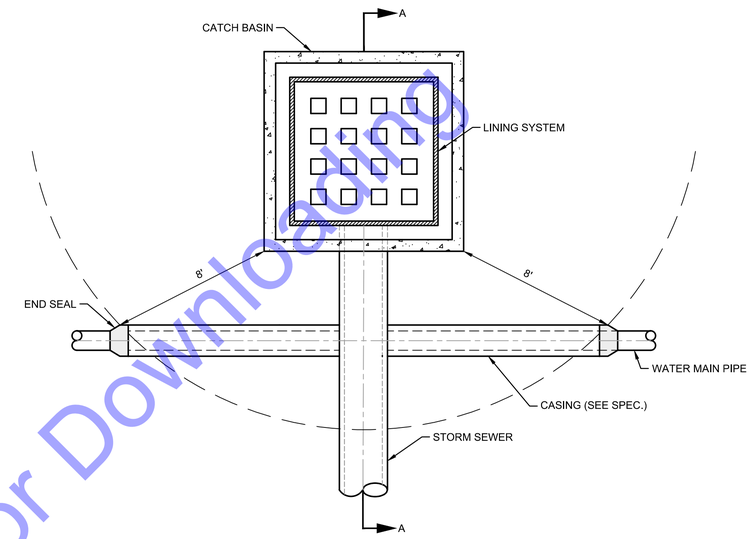

PLAN

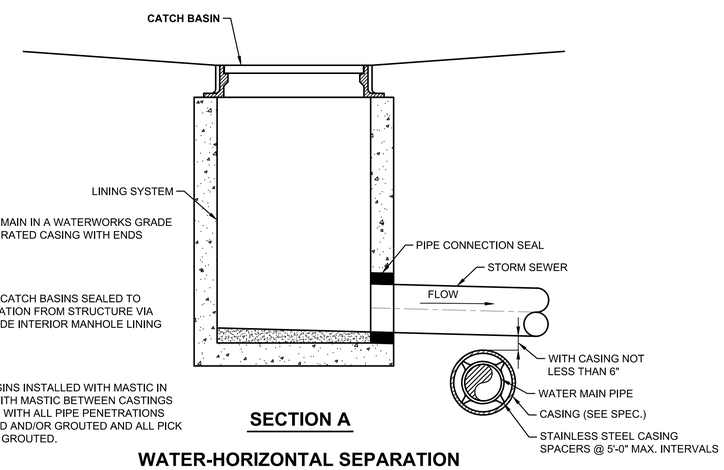

SECTION A

NOTES:

1. INSTALL WATER MAIN IN A WATERWORKS GRADE 200 psi PRESSURE RATED CASING WITH ENDS SEALED.

OR

2. EXISTING / NEW CATCH BASINS SEALED TO PREVENT EXFILTRATION FROM STRUCTURE VIA COMMERCIAL GRADE INTERIOR MANHOLE LINING SYSTEM.

OR

3. NEW CATCH BASINS INSTALLED WITH MASTIC IN ALL JOINTS AND WITH MASTIC BETWEEN CASTINGS AND STRUCTURES WITH ALL PIPE PENETRATIONS PROPERLY BOOTED AND/OR GROUTED AND ALL PICK HOLES PROPERLY GROUTED.

WATER-HORIZONTAL SEPARATION FROM STORMWATER STRUCTURES

NOT TO SCALE

ITEMS SUPPLIED & INSTALLED BY CONTRACTOR	PART NUMBERS (3/4" SINGLE SERVICE)	PART NUMBERS (1" DOUBLE SERVICE)	REMARKS
	FORD METER BOX CO.	FORD METER BOX CO.	FORD METER BOX CO.
CHECK VALVE	HA 34-313G	2 - HA 34-313G	
FRAME & COVER	NO. C-3T	NO. C-3TT	w/ CAPS
5/8" ANGLE METER VALVE	KV43-331WG	2 - KV13-331	FOR DOUBLE, U-BRANCH U48-43
SENSUS METER	5/8" x 1/2" SR	2 - 5/8" x 1/2" SR	RADIO READ PIT LID TO READ IN 100 CUBIC FEET

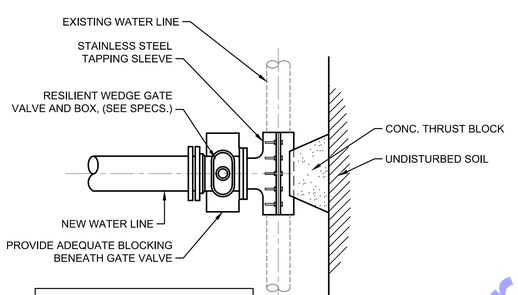

NOTE:
BENDS AND FITTINGS AS REQUIRED.

TYPE "A" CONNECTION TO EXISTING WATER MAIN

NOT TO SCALE

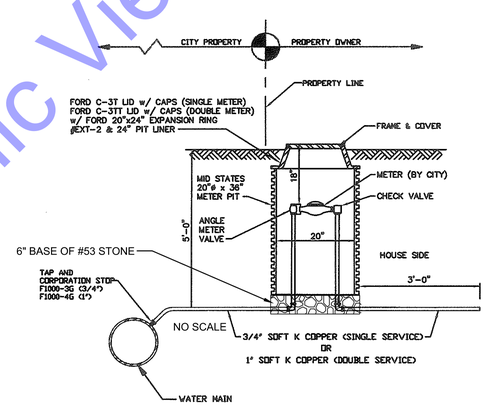

3/4" - METER INSTALLATION DETAIL

NOT TO SCALE

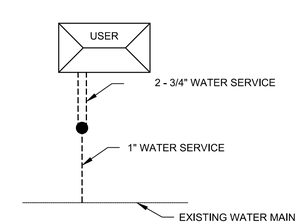

DUAL WATER SERVICE DETAIL

NOT TO SCALE

For Public Viewing Only - Not for Downloading

COMMONWEALTH ENGINEERS, INC.
A wealth of resources for matter is common gold.
https://commonwealthengineers.com/

RYAN M. LAREAU REGISTERED No. 11800145 STATE OF INDIANA PROFESSIONAL ENGINEER

Signature 7-7-25 Date

CITY OF RENSSELAER
JASPER COUNTY, IN

7TH STREET IMPROVEMENTS

© 2025 BY COMMONWEALTH ENGINEERS, INC. ALL RIGHTS RESERVED. REPRODUCTION IN ANY METHOD WHOLE OR IN PART WITHOUT PERMISSION IS PROHIBITED

Indiana811 Know what's below. 811 before you dig. 1-800-382-5544 (ITS THE LAW)

No.	Submittal / Revision	By	Date

Designed By: RML	Drawn By: JML	Checked By: RM
Issue Date: ---	Project No: H25033	Scale: AS SHOWN

WATER MAIN DETAILS

Drawing No: C1-3

Sheet: 12 OF 26

File: Z:\SHARED\IN CLIENTS M-Z\RENSSELAER\H25033 - 7TH STREET IMPROVEMENTS\06 CAD\A CURRENT FILES\1 DRAWINGS\05- MISCELLANEOUS DETAIL DRAWINGS.DWG
Saved: 7/3/2025 11:39:24 AM Plotted: 7/7/2025 2:10:15 PM Current User: Joseph Lopez LastSavedBy: jlopez

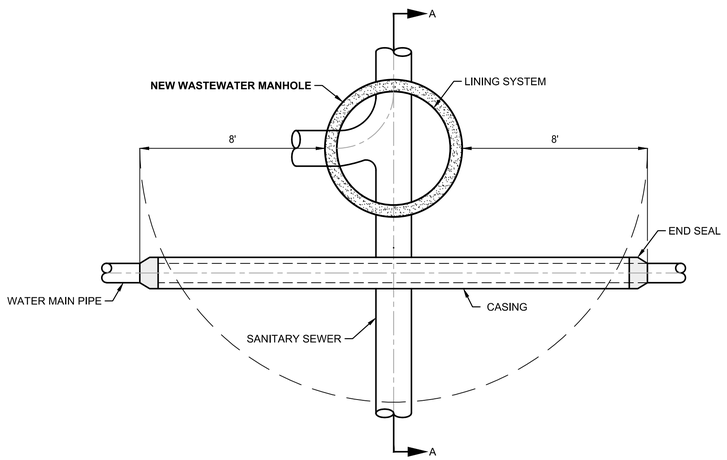

PLAN

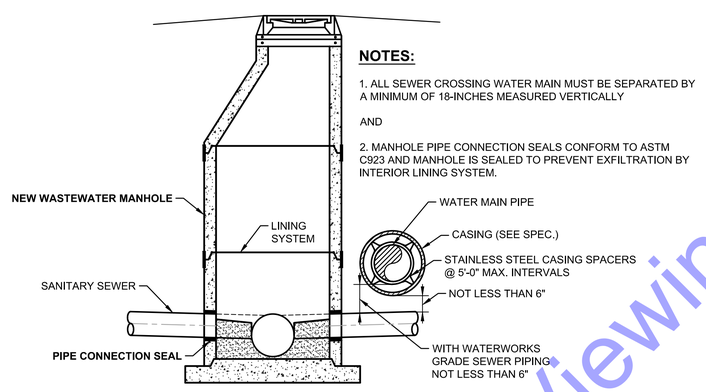

SECTION A

NOTES:

1. ALL SEWER CROSSING WATER MAIN MUST BE SEPARATED BY A MINIMUM OF 18-INCHES MEASURED VERTICALLY

AND

2. MANHOLE PIPE CONNECTION SEALS CONFORM TO ASTM C923 AND MANHOLE IS SEALED TO PREVENT EXFILTRATION BY INTERIOR LINING SYSTEM.

WATER-HORIZONTAL SEPARATION FROM NEW WASTEWATER MANHOLES

NOT TO SCALE

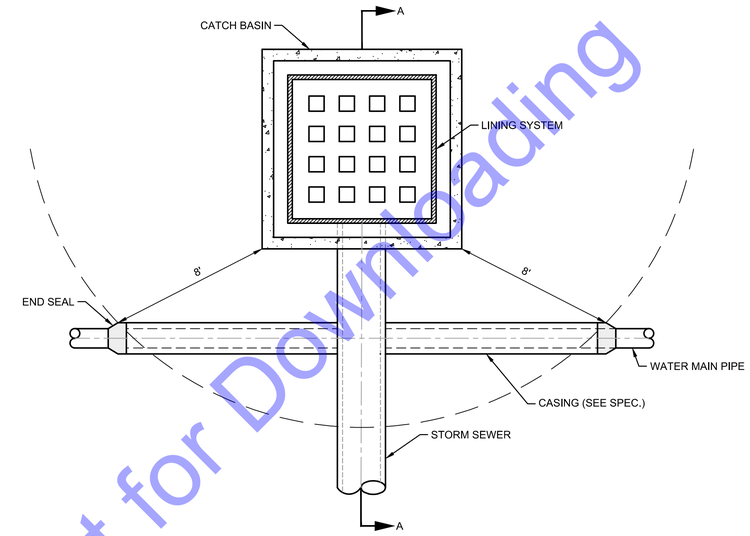

PLAN

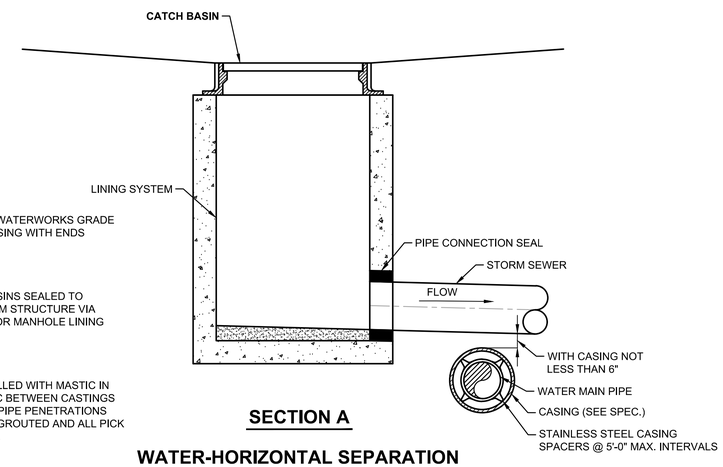

SECTION A

NOTES:

1. INSTALL WATER MAIN IN A WATERWORKS GRADE 200 psi PRESSURE RATED CASING WITH ENDS SEALED.

OR

2. EXISTING / NEW CATCH BASINS SEALED TO PREVENT EXFILTRATION FROM STRUCTURE VIA COMMERCIAL GRADE INTERIOR MANHOLE LINING SYSTEM.

OR

3. NEW CATCH BASINS INSTALLED WITH MASTIC IN ALL JOINTS AND WITH MASTIC BETWEEN CASTINGS AND STRUCTURES WITH ALL PIPE PENETRATIONS PROPERLY BOOTED AND/OR GROUTED AND ALL PICK HOLES PROPERLY GROUTED.

WATER-HORIZONTAL SEPARATION FROM STORMWATER STRUCTURES

NOT TO SCALE

For Public Viewing Only - Not for Downloading

COMMONWEALTH ENGINEERS, INC.
A wealth of resources to create a common goal.
https://commonwealthengineers.com/

RYAN M. LAREAU
REGISTERED No. 11800145 STATE OF INDIANA
PROFESSIONAL ENGINEER

Signature 7-7-25 Date

CITY OF RENSSELAER
JASPER COUNTY, IN

7TH STREET IMPROVMENTS

© 2025 BY COMMONWEALTH ENGINEERS, INC. ALL RIGHTS RESERVED. REPRODUCTION BY ANY METHOD IN WHOLE OR IN PART WITHOUT PERMISSION IS PROHIBITED

Indiana811 Know what's below. 811 before you dig. 1-800-382-5544 (ITS THE LAW)

No.	Submittal / Revision	By	Date

Designed By:	Drawn By:	Checked By:
RML	JML	RM
Issue Date:	Project No:	Scale:
---	H25033	AS SHOWN

WATER MAIN DETAILS

Drawing No:
C1-4

Sheet: 13 OF 26

File: Z:\SHREDIN CLIENTS M-Z\RENSSELAER\D H25033 - 7TH STREET IMPROVEMENTS\06 CADA CURRENT FILES\1 DRAWINGS\05- MISCELLANEOUS DETAIL DRAWINGS.DWG
Saved: 7/3/2025 11:39:24 AM Plotted: 7/7/2025 2:10:19 PM Current User: Joseph Lopez LastSavedBy: jlopez

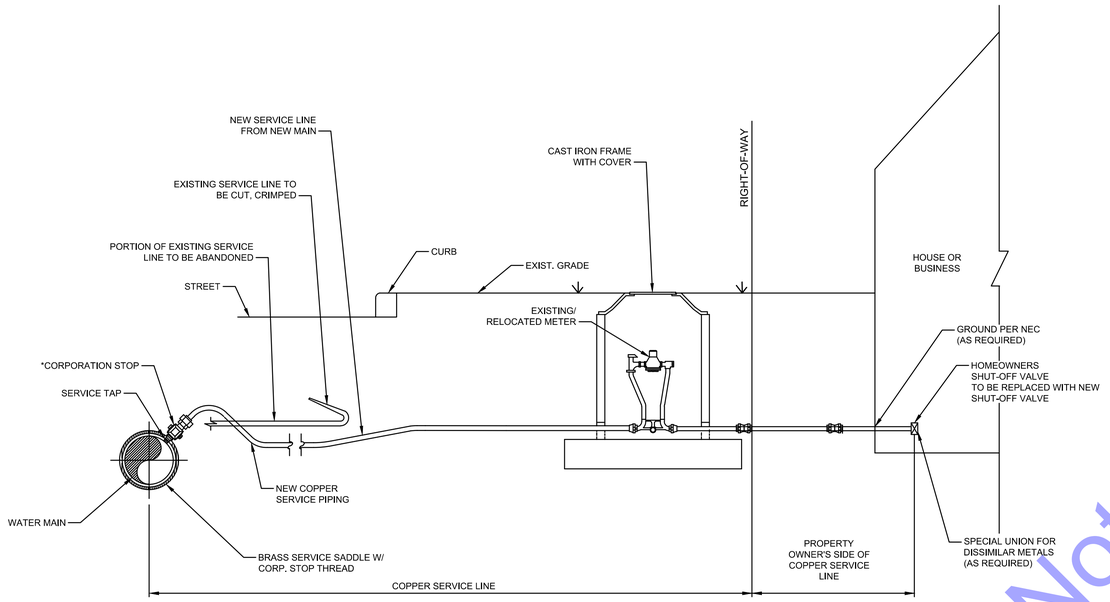

GENERAL NOTES:

1. CORPORATION STOP SHALL BE FORD.
2. NEW METER PIT SHALL HAVE ANGLE SHUT OFF ON CITY SIDE OF PIT.
3. MOVE ALL METERS OUTSIDE INTO PITS.
4. ALL ABANDONED CORP. STOPS SHALL BE PLUGGED.

TYPICAL SERVICE TAP, SERVICE LINE AND METER SETTER RECONNECTION DETAIL

NOT TO SCALE

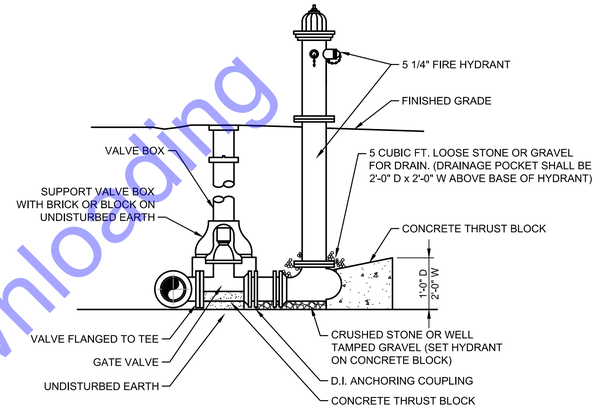

FIRE HYDRANT DETAIL

NOT TO SCALE

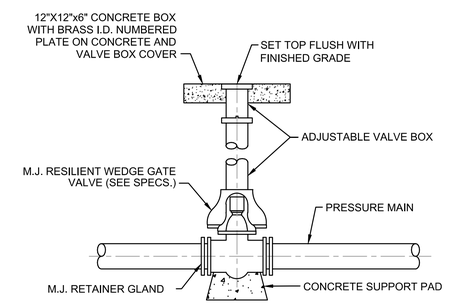

BURIED PLUG/GATE VALVE AND BOX DETAIL

NOT TO SCALE

For Public Viewing Only - Not for Downloading

COMMONWEALTH ENGINEERS, INC.
A wealth of resources to make a common goal.
https://commonwealthengineers.com/

RYAN M. LAREAU
REGISTERED No. 11800145 STATE OF INDIANA
PROFESSIONAL ENGINEER
Signature 7-7-25 Date

CITY OF RENSSELAER
JASPER COUNTY, IN

7TH STREET IMPROVMEMENTS

© 2025 BY COMMONWEALTH ENGINEERS, INC. ALL RIGHTS RESERVED. REPRODUCTION BY ANY METHOD IN WHOLE OR IN PART WITHOUT PERMISSION IS PROHIBITED

Indiana811 Know what's below. 811 before you dig. 1-800-382-5544 (ITS THE LAW)

No.	Submittal / Revision	By	Date

Designed By:	Drawn By:	Checked By:
RML	JML	RM
Issue Date: ---	Project No: H25033	Scale: AS SHOWN

WATER MAIN DETAILS

Drawing No: C1-5

Sheet: 14 OF 26

File: Z:\SHAREDIN CLIENTS MAZ\RENSSELAER\D H25033 - 7TH STREET IMPROVEMENTS\06 CADA CURRENT FILES\1 DRAWINGS\05- MISCELLANEOUS DETAIL DRAWINGS.DWG
Saved: 7/3/2025 11:39:24 AM Plotted: 7/7/2025 2:10:21 PM Current User: Joseph Lopez LastSavedBy: jlopez

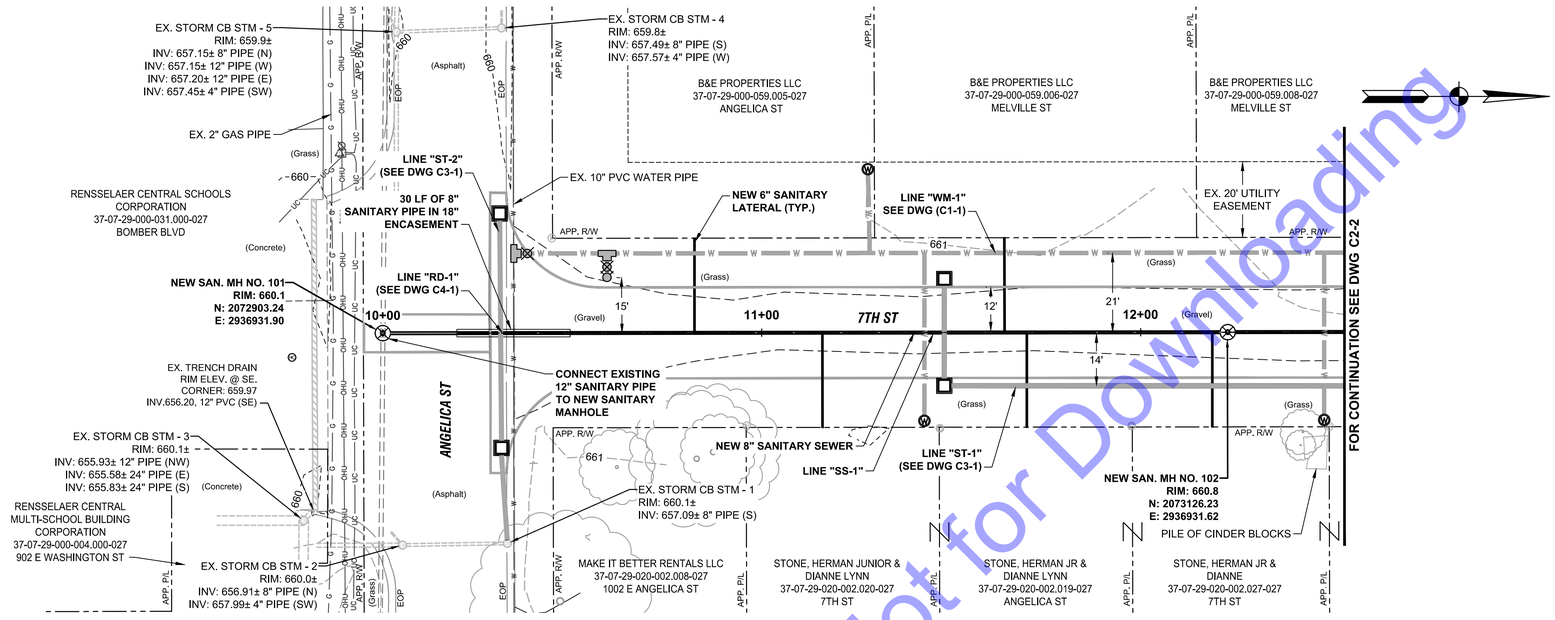

PLAN VIEW - LINE "SS-1"

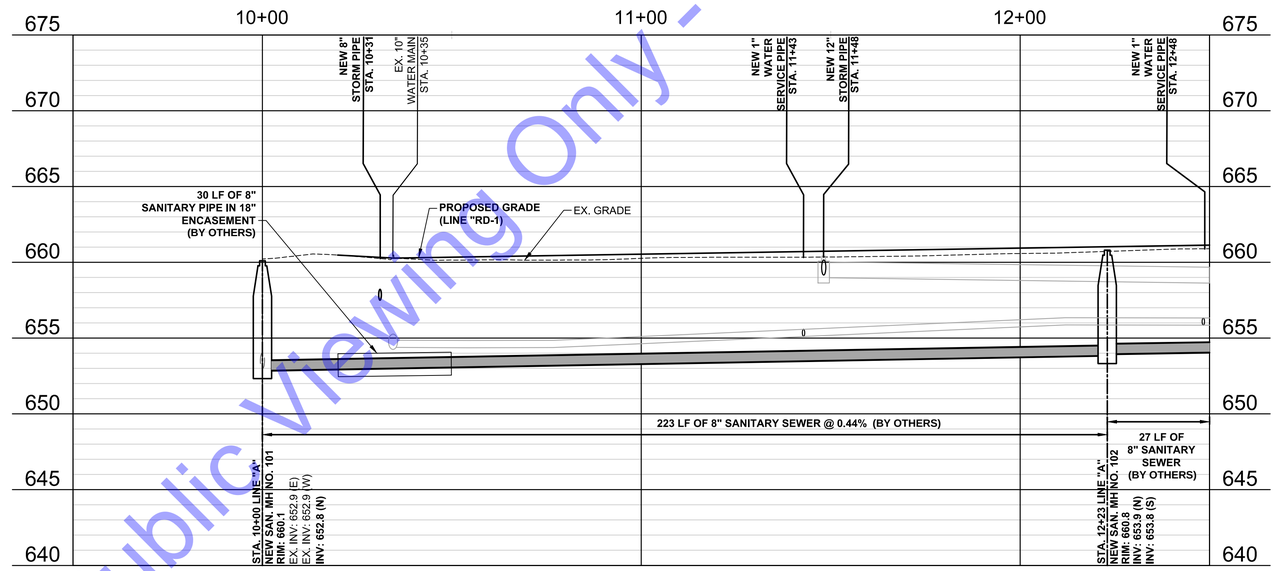

PROFILE VIEW - LINE "SS-1"

HORIZONTAL SCALE: 1" = 20'-0"
0 10' 20' 40' 60'
VERTICAL SCALE: 1"=5'
0 5'

For Public Viewing Only - Not for Downloading

COMMONWEALTH ENGINEERS, INC.
A wealth of resources to create a common goal.
https://commonwealthengineers.com/

REGISTERED RYAN M. LAREAU No. 11800145 STATE OF INDIANA PROFESSIONAL ENGINEER
Signature 7-7-25 Date

CITY OF RENSSELAER
JASPER COUNTY, IN

7TH STREET IMPROVMENTS

© 2025 BY COMMONWEALTH ENGINEERS, INC. ALL RIGHTS RESERVED. REPRODUCTION BY ANY METHOD IN WHOLE OR IN PART WITHOUT PERMISSION IS PROHIBITED

Indiana 811 Know what's below. 811 before you dig. 1-800-382-5544 (ITS THE LAW)

No.	Submittal / Revision	By	Date

Designed By:	Drawn By:	Checked By:
RML	JML	RM
Issue Date:	Project No:	Scale:
---	H25033	AS SHOWN

PLAN AND PROFILE VIEWS - LINE "SS-1"

Drawing No:
C2-1
Sheet: 15 OF 26

File: Z:\SHAREDIN CLIENTS MAZ\RENSSELAER\D H25033 - 7TH STREET IMPROVEMENTS\06 CADA CURRENT FILES\1 DRAWINGS\04- PLAN AND PROFILE DRAWINGS.DWG
Saved: 7/7/2025 2:07:28 PM Plotted: 7/7/2025 2:10:47 PM Current User: Joseph Lopez LastSavedBy: jlopez

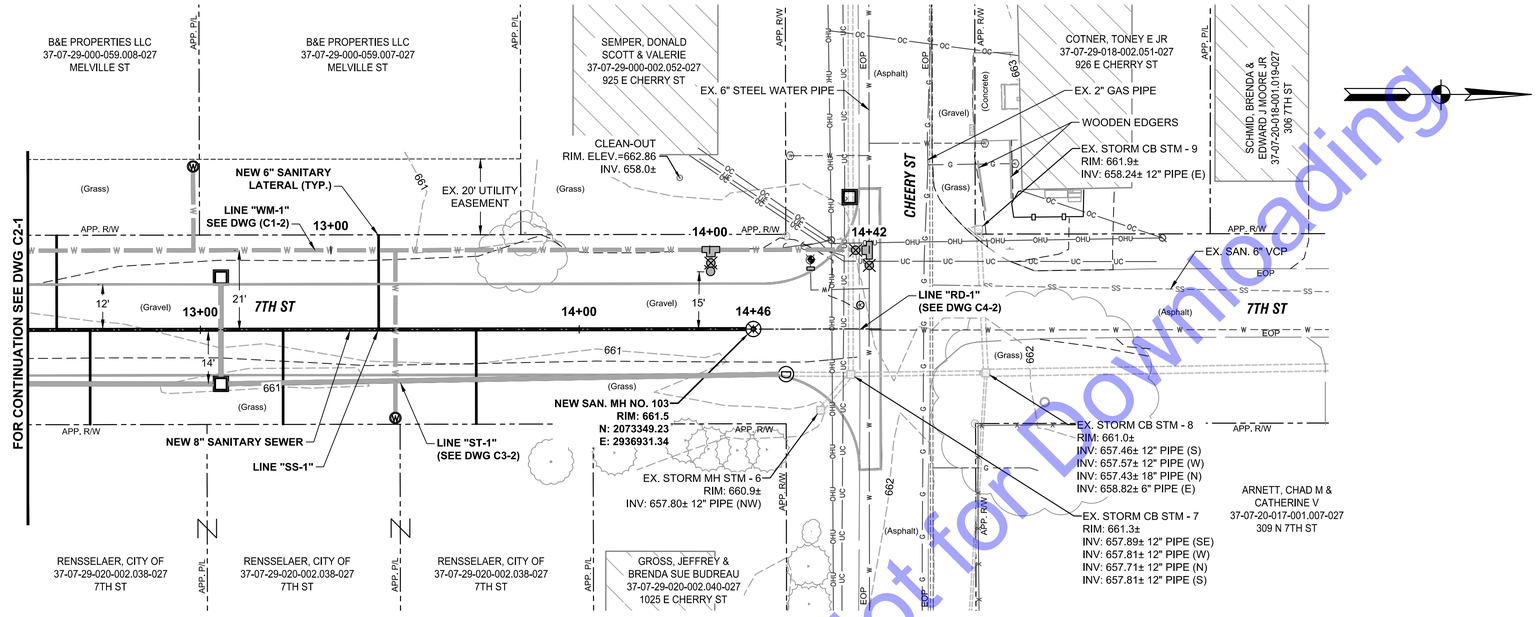

PLAN VIEW - LINE "SS-1"

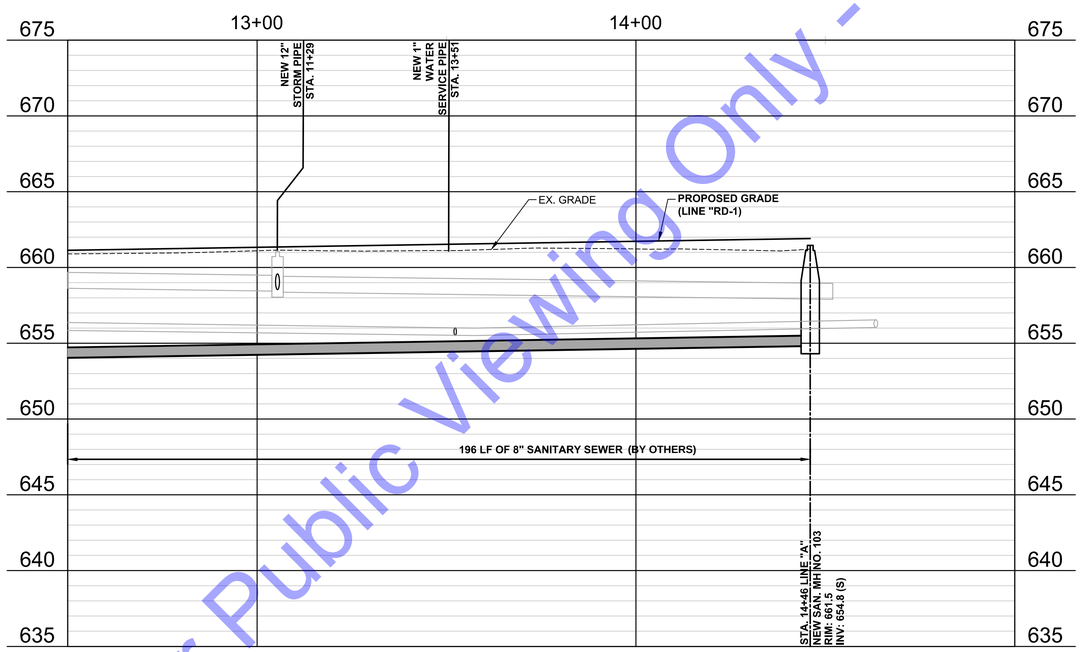

PROFILE VIEW - LINE "SS-1"

HORIZONTAL SCALE: 1" = 20'-0"
0 10' 20' 40' 60'
VERTICAL SCALE: 1"=5'
0 5'

For Public Viewing Only - Not for Downloading

COMMONWEALTH ENGINEERS, INC.
A wealth of resources to create a common goal.
https://commonwealthengineers.com/

REGISTERED No. 11800145 STATE OF INDIANA
RYAN M. LAREAU
PROFESSIONAL ENGINEER

Signature 7-7-25 Date

CITY OF RENSSELAER
JASPER COUNTY, IN

7TH STREET IMPROVMENTS

© 2025 BY COMMONWEALTH ENGINEERS, INC. ALL RIGHTS RESERVED. REPRODUCTION OR USE OF THIS DRAWING IN WHOLE OR IN PART WITHOUT PERMISSION IS PROHIBITED

Indiana811 Know what's below. 811 before you dig. 1-800-382-5544 (ITS THE LAW)

No.	Submittal / Revision	By	Date

Designed By:	Drawn By:	Checked By:
RML	JML	RM
Issue Date:	Project No:	Scale:
---	H25033	AS SHOWN

PLAN AND PROFILE VIEWS - LINE "SS-1"

Drawing No:
C2-2

Sheet: 16 OF 26

File: Z:\SHAREDIN CLIENTS MAZ\RENSSELAER\D H25033 - 7TH STREET IMPROVEMENTS\06 CADA CURRENT FILES\1 DRAWINGS\04- PLAN AND PROFILE DRAWINGS.DWG
Saved: 7/7/2025 2:07:28 PM Plotted: 7/7/2025 2:11:05 PM Current User: Joseph Lopez LastSavedBy: jlopez

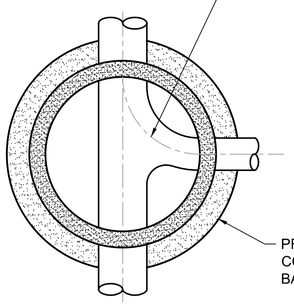

PLAN

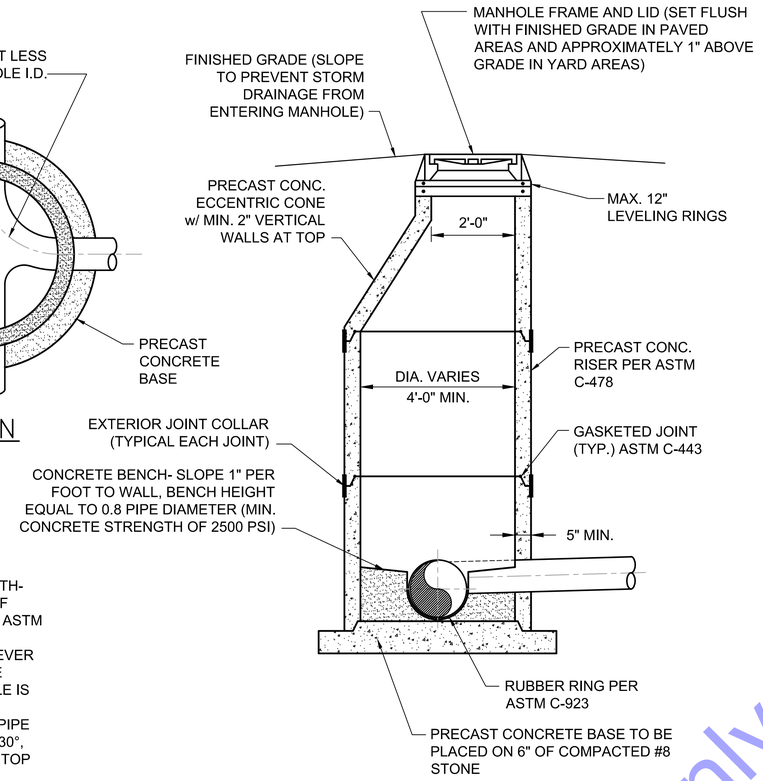

GENERAL NOTES:

1. FOR ALL MANHOLES 6'-0" OR LESS IN DEPTH- PROVIDE RISER WITH FLAT TOP IN LIEU OF ECCENTRIC CONE IN ACCORDANCE WITH ASTM C-478.
2. DROP MANHOLES SHALL BE USED WHENEVER THE DISTANCE FROM THE INVERT OF THE INCOMING LINE AND BOTTOM OF MANHOLE IS GREATER THAN TWO FEET.
3. FOR MANHOLES WHERE THE CHANGE IN PIPE ANGLE IS GREATER THAN, OR EQUAL TO 30°, REPLACE INITIAL BACKFILL TO 1'-0" OVER TOP OF PIPE WITH FLOWABLE FILL.

STANDARD SANITARY MANHOLE DETAIL

NOT TO SCALE

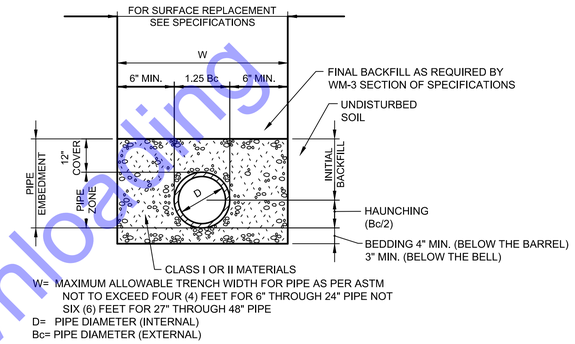

W= MAXIMUM ALLOWABLE TRENCH WIDTH FOR PIPE AS PER ASTM NOT TO EXCEED FOUR (4) FEET FOR 6" THROUGH 24" PIPE NOT SIX (6) FEET FOR 27" THROUGH 48" PIPE
D= PIPE DIAMETER (INTERNAL)
Bc= PIPE DIAMETER (EXTERNAL)

NOTES:

1. COMPACTED INITIAL BACKFILL SHALL EXTEND A MINIMUM OF 12" ABOVE THE TOP OF THE PIPE. FINAL BACKFILL ABOVE THIS POINT SHALL BE IN ACCORDANCE WITH THE SPECIFICATIONS AND AS REQUIRED HEREIN.
2. WHEN CLASS I MATERIAL IS USED FOR BEDDING, HAUNCHING AND INITIAL BACKFILL COMPACTION MAY BE ACCOMPLISHED BY HAND OR MECHANICAL TAMPING, OR BY WALKING, TO A MIN. OF 85% STANDARD PROCTOR DENSITY.
3. WHEN CLASS II MATERIAL IS USED FOR BEDDING, HAUNCHING AND INITIAL BACKFILL COMPACTION MAY BE ACCOMPLISHED BY HAND OR MECHANICAL TAMPING TO A MIN. OF 85% STANDARD PROCTOR DENSITY.
4. WORK FALLING UNDER THE JURISDICTION OF THE INDIANA DEPARTMENT OF TRANSPORTATION (INDOT) SHALL UTILIZE COMPACTED GRANULAR BACKFILL MATERIAL FOR INITIAL AND FINAL BACKFILL ANYWHERE WITHIN 21 FEET OF THE EDGE OF PAVEMENT. FOR ALL OTHER NON-INDOT PAVEMENT AREAS (INCLUDING BOTH HARD SURFACED AND COMPACTED AGGREGATE), COMPACTED GRANULAR BACKFILL MATERIAL SHALL BE USED WITHIN 5 FEET OF THE EDGE OF THE PAVEMENT.
5. TRENCH WIDTHS BELOW THE BOTTOM OF TRENCH BOX OR SHORING USED FOR TRENCH SUPPORT. BOTTOM OF TRENCH BOX OR SHORING SHALL BE PLACED NO LOWER THAN THE TOP OF PIPE.

TRENCH DETAIL FOR FLEXIBLE CONDUITS

NOT TO SCALE

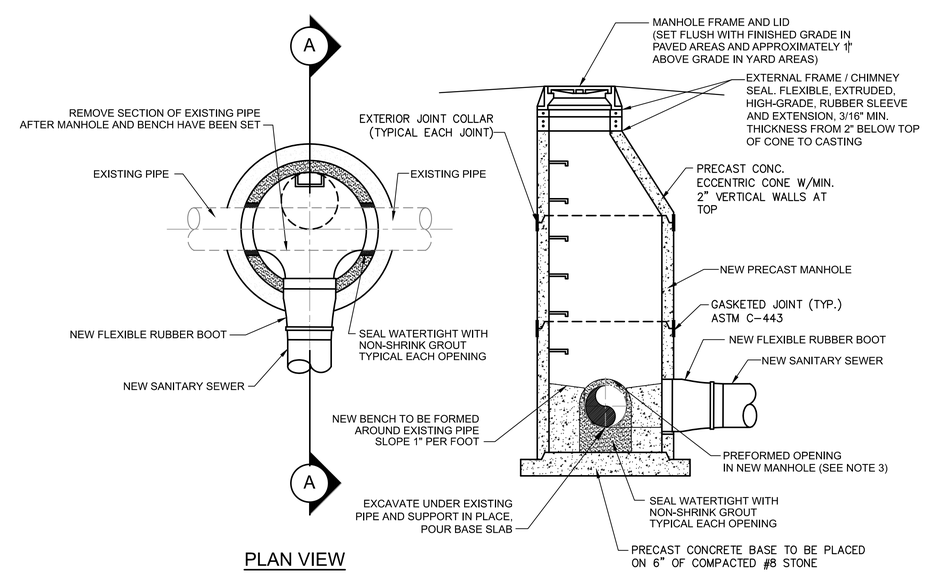

PLAN VIEW

SECTION A

GENERAL NOTES:

1. NEW "DOG-HOUSE" MANHOLE SHALL BE AS SPECIFIED FOR STANDARD MANHOLES IN WM-9 "STANDARD MANHOLES"

2. ALL REINFORCING SHALL MEET ASTM C-478

3. HOLES IN PRECAST UNITS SHALL BE 4" MIN. TO 8" MAX. LARGER THAN THE OUTSIDE DIAMETER OF THE PROPOSED PIPE

NEW MANHOLE OVER EXISTING SEWER DETAIL

NOT TO SCALE

For Public Viewing Only - Not for Downloading

COMMONWEALTH ENGINEERS, INC.
A wealth of resources to master a common goal.
https://commonwealthengineers.com/

RYAN M. LAREAU
REGISTERED
No. 11800145
STATE OF INDIANA
PROFESSIONAL ENGINEER

Signature 7-7-25 Date

CITY OF RENSSELAER
JASPER COUNTY, IN

7TH STREET IMPROVMENTS

© 2025 BY COMMONWEALTH ENGINEERS, INC. ALL RIGHTS RESERVED. REPRODUCTION BY ANY METHOD IN WHOLE OR IN PART WITHOUT PERMISSION IS PROHIBITED

Indiana811 Know what's below. 811 before you dig. 1-800-382-5544 (ITS THE LAW)

No.	Submittal / Revision	By	Date

Designed By:	Drawn By:	Checked By:
RML	JML	RM
Issue Date:	Project No:	Scale:
---	H25033	AS SHOWN

SANITARY SEWER DETAILS

Drawing No:
C2-3

Sheet: 17 OF 26

File: Z:\SHREDIN CLIENTS M-Z\RENSSELAER\H25033 - 7TH STREET IMPROVEMENTS\06 CADA CURRENT FILES\1 DRAWINGS\05- MISCELLANEOUS DETAIL DRAWINGS.DWG
Saved: 7/3/2025 11:39:24 AM Plotted: 7/7/2025 2:11:17 PM Current User: Joseph Lopez LastSavedBy: jlopez

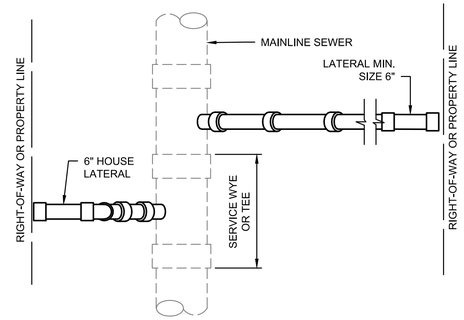

PLAN VIEW

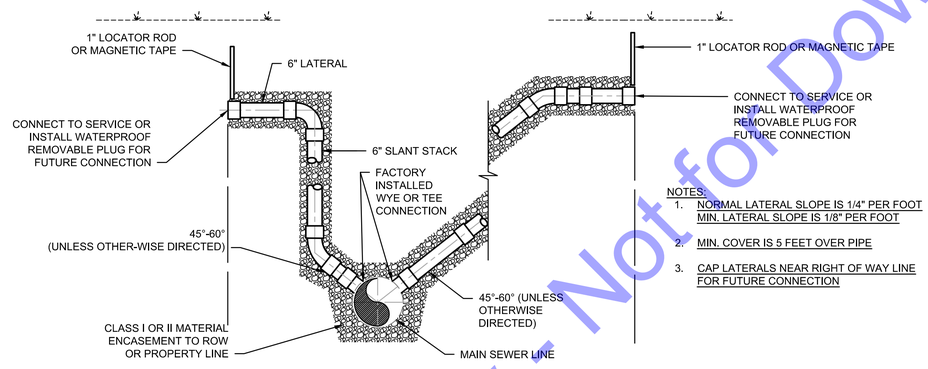

WITH SLANT STACK ELEVATION WITHOUT SLANT STACK

NOTES:
1. NORMAL LATERAL SLOPE IS 1/4" PER FOOT MIN. LATERAL SLOPE IS 1/8" PER FOOT
2. MIN. COVER IS 5 FEET OVER PIPE
3. CAP LATERALS NEAR RIGHT OF WAY LINE FOR FUTURE CONNECTION

SERVICE CONNECTION

NOT TO SCALE

CONTRACTOR SHALL PROVIDE "AS-BUILT" SERVICE CONNECTION TIES TO THE OWNER, ENGINEER, AND PROPERTY OWNER

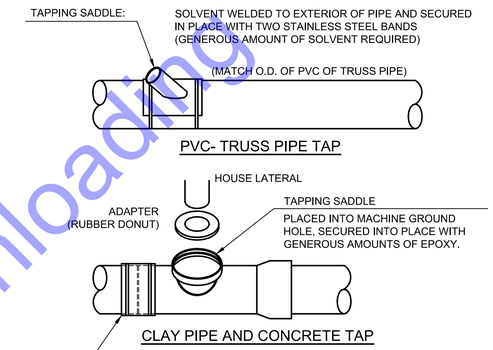

IF THE CLAY MAINLINE SEWER IS BROKEN THE DAMAGED SECTION SHALL BE REMOVED AND A REPLACEMENT SECTION INSERTED USING RUBBER ADAPTER AND 2 STAINLESS STEEL BANDS

GENERAL NOTES:

USE OF HAMMER AND CHISEL TO CUT SADDLE APPING HOLE IN CLAY PIPE IS NOT ACCEPTABLE

USE OF CONCRETE GROUT IN PLACE OF THE ABOVE SHOWN SOLVENT WIELDED TAPPING SADDLES IS NOT ACCEPTABLE

EPOXY SUPPLIED FOR SUMMER GRADE TEMPS (OVER 60°F) AND WINTER GRADE TEMPS (BELOW 60°F)

1. PLASTIC LINES: A PLASTIC SADDLE FOR PLASTIC SEWER LINES THAT CAN BE GLUED WITH TWO STAINLESS STEEL BANDS OVER A VERY NEATLY CUT HOLE IN THE MAIN LINE AS SHOWN ABOVE.
2. CLAY AND CONCRETE LINES: A CONTEX TAPPING SADDLE CAN BE TAPPED IN A SEWER LINE AS SHOWN ABOVE.

LATERAL CONNECTION INTO EXISTING SEWER

NOT TO SCALE

For Public Viewing Only - Not for Downloading

COMMONWEALTH ENGINEERS, INC.
A wealth of resources to create a common goal.
https://commonwealthengineers.com/

RYAN M. LAREAU
REGISTERED No. 11800145 STATE OF INDIANA
PROFESSIONAL ENGINEER

Signature 7-7-25 Date

CITY OF RENSSELAER
JASPER COUNTY, IN

7TH STREET IMPROVEMENTS

© 2025 BY COMMONWEALTH ENGINEERS, INC. ALL RIGHTS RESERVED. REPRODUCTION BY ANY METHOD IN WHOLE OR IN PART WITHOUT PERMISSION IS PROHIBITED

Indiana811 Know what's below. 811 before you dig. 1-800-382-5544 (ITS THE LAW)

No.	Submittal / Revision	By	Date

Designed By:	Drawn By:	Checked By:
RML	JML	RM
Issue Date:	Project No:	Scale:
---	H25033	AS SHOWN

SANITARY SEWER DETAILS

Drawing No:
C2-4

Sheet: 18 OF 26

File: Z:\SHARED\IN CLIENTS M-Z\RENSSELAER\H25033 - 7TH STREET IMPROVEMENTS\06 CADD\ CURRENT FILES\1 DRAWINGS\05- MISCELLANEOUS DETAIL DRAWINGS.DWG
Saved: 7/3/2025 11:39:24 AM Plotted: 7/7/2025 2:11:19 PM Current User: Joseph Lopez LastSavedBy: jlopez

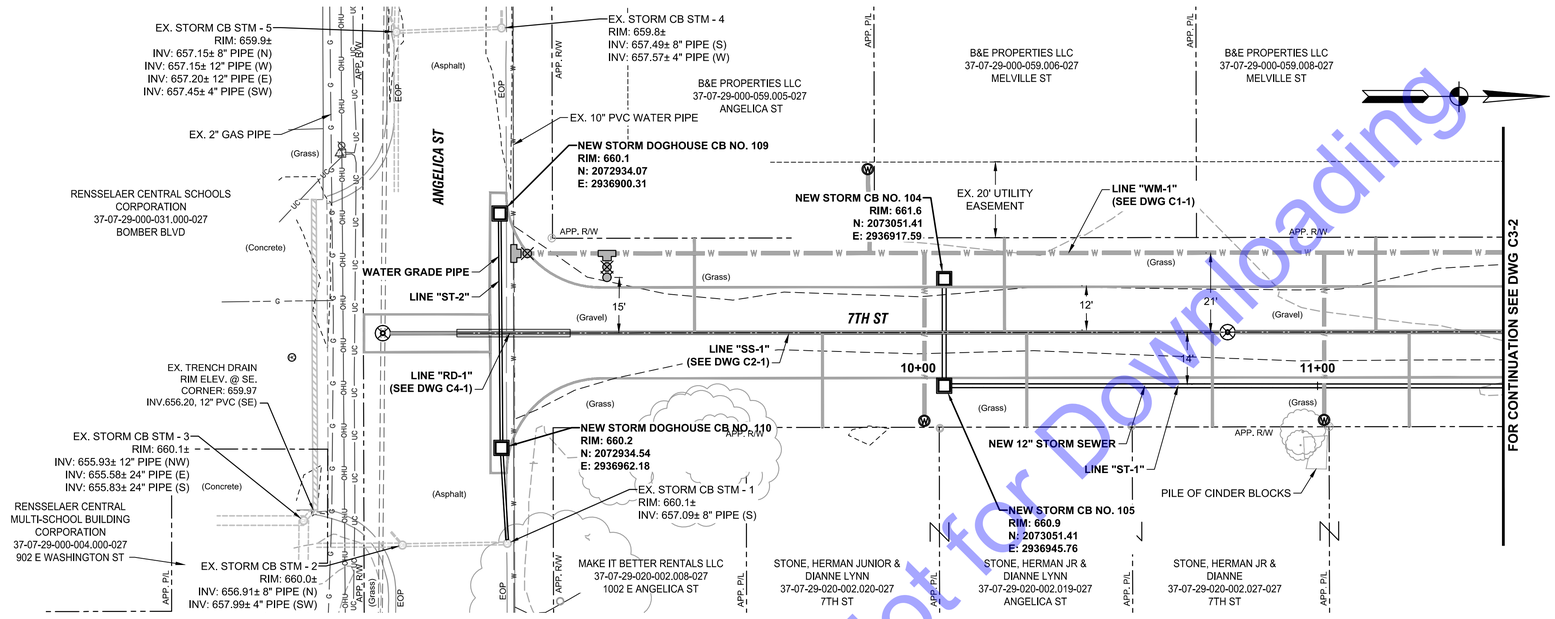

PLAN VIEW - "ST-1" & "ST-2"

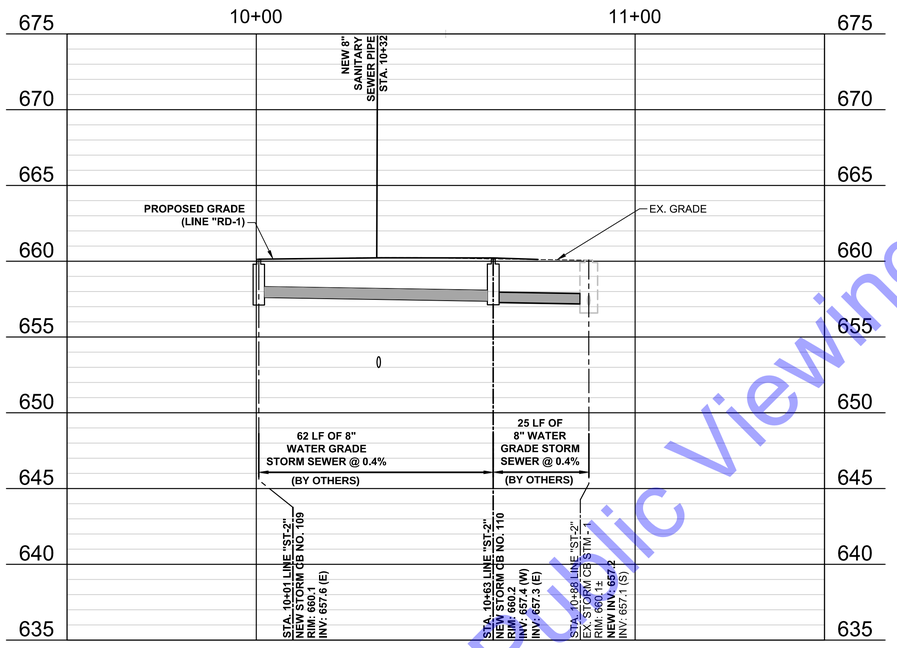

PROFILE VIEW - "ST-2"

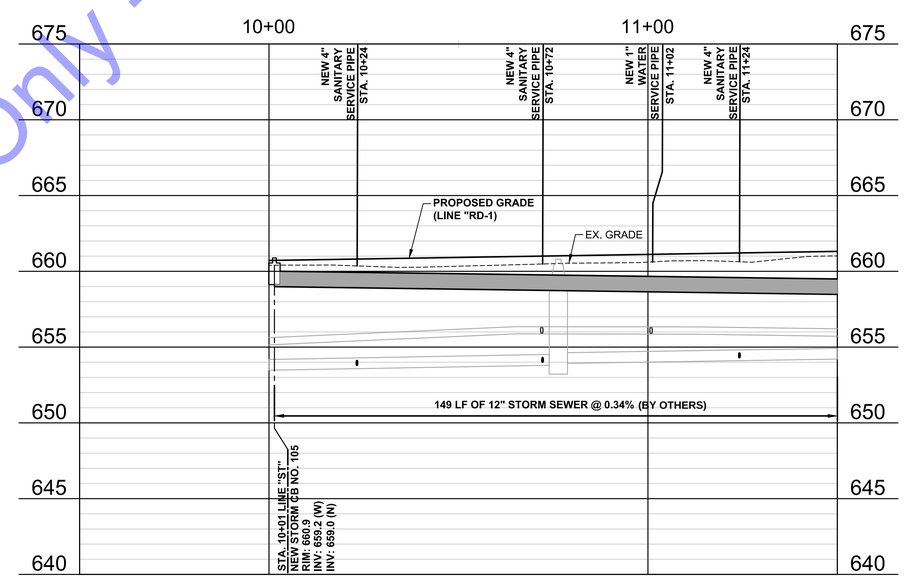

PROFILE VIEW - "ST-1"

HORIZONTAL SCALE: 1" = 20'-0"
0 10' 20' 40' 60'
VERTICAL SCALE: 1" = 5'
0 5'

For Public Viewing Only - Not for Downloading

COMMONWEALTH ENGINEERS, INC.
A wealth of resources to create a common goal.
https://commonwealthengineers.com/

RYAN M. LAREAU
REGISTERED No. 11800145 STATE OF INDIANA
PROFESSIONAL ENGINEER
Signature 7-7-25 Date

CITY OF RENSSELAER
JASPER COUNTY, IN

7TH STREET IMPROVMENTS

© 2025 BY COMMONWEALTH ENGINEERS, INC. ALL RIGHTS RESERVED. REPRODUCTION OR USE ELSEWHERE WHOLE OR IN PART WITHOUT PERMISSION IS PROHIBITED

Indiana811 Know what's below. 811 before you dig. 1-800-382-5544 (ITS THE LAW)

No.	Submittal / Revision	By	Date

Designed By:	Drawn By:	Checked By:
RML	JML	RM
Issue Date:	Project No:	Scale:
---	H25033	AS SHOWN

PLAN AND PROFILE VIEWS - LINE "ST-1" AND "ST-2"

Drawing No:
C3-1
Sheet: 19 OF 26

File: Z:\SHAREDIN CLIENTS MAZ\RENSSELAER\D H25033 - 7TH STREET IMPROVEMENTS\06 CADA CURRENT FILES\1 DRAWINGS\04- PLAN AND PROFILE DRAWINGS.DWG
Saved: 7/7/2025 2:18:41 PM Plotted: 7/7/2025 2:19:35 PM Current User: Joseph Lopez LastSavedBy: jlopez

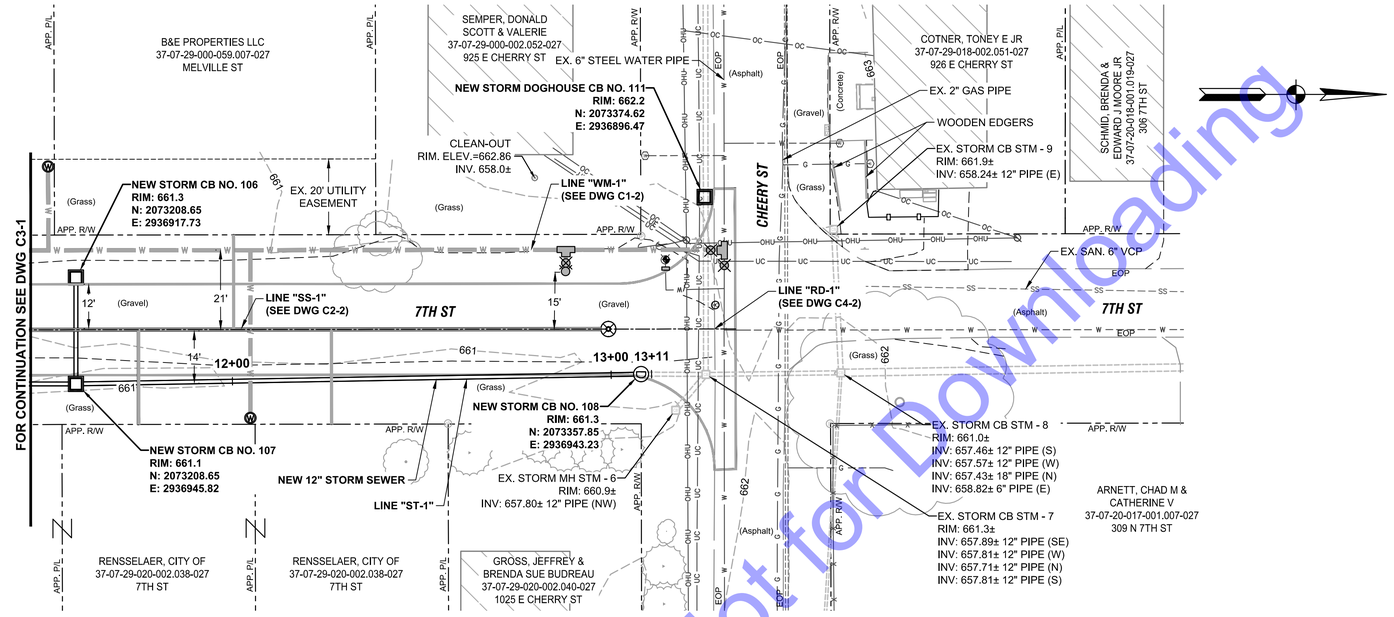

PLAN VIEW - LINE "ST-1"

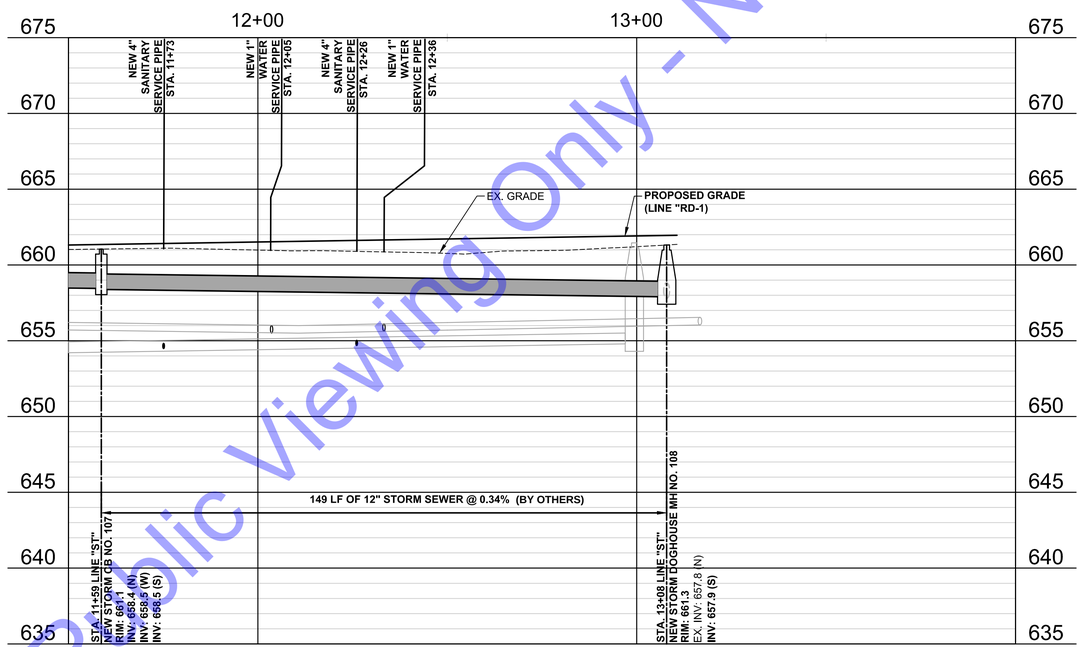

PROFILE VIEW - LINE "ST-1"

HORIZONTAL SCALE: 1" = 20'-0"
0 10' 20' 40' 60'
VERTICAL SCALE: 1" = 5'
0 5'

For Public Viewing Only - Not for Downloading

COMMONWEALTH ENGINEERS, INC.
A wealth of resources to create a common goal.
https://commonwealthengineers.com/

RYAN M. LAREAU
REGISTERED No. 11800145 STATE OF INDIANA
PROFESSIONAL ENGINEER

Signature 7-7-25 Date

CITY OF RENSSELAER
JASPER COUNTY, IN

7TH STREET IMPROVMENTS

© 2025 BY COMMONWEALTH ENGINEERS, INC. ALL RIGHTS RESERVED. REPRODUCTION BY ANY METHOD IN WHOLE OR IN PART WITHOUT PERMISSION IS PROHIBITED

Indiana811 Know what's below. 811 before you dig. 1-800-382-5544 (ITS THE LAW)

No.	Submittal / Revision	By	Date

Designed By:	Drawn By:	Checked By:
RML	JML	RM
Issue Date: ---	Project No: H25033	Scale: AS SHOWN

PLAN AND PROFILE VIEWS - LINE "ST-1"

Drawing No: C3-2

Sheet: 20 OF 26

File: Z:\SHAREDIN CLIENTS MA-Z\RENSSELAER\D H25033 - 7TH STREET IMPROVEMENTS\06 CADA CURRENT FILES\1 DRAWINGS\04- PLAN AND PROFILE DRAWINGS.DWG
Saved: 7/7/2025 2:07:28 PM Plotted: 7/7/2025 2:12:11 PM Current User: Joseph Lopez LastSavedBy: jlopez

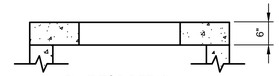

FLAT TOP DETAIL

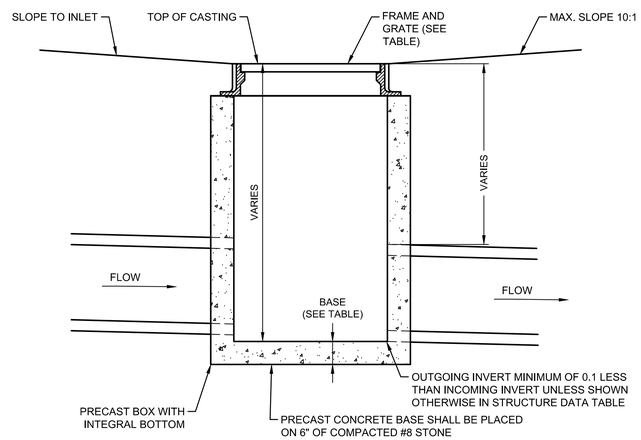

SECTION "A-A"

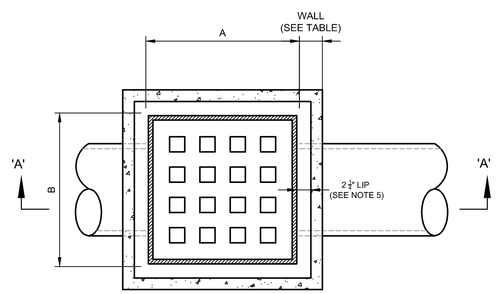

PLAN

INLET TYPE	CLASS	USAGE	CASTING TYPE (1)	A (IN)	B (IN)	WALL (IN)	MIN. BASE (IN)
A-1	HEAVY DUTY	FLAT GRATE INLET AND FRAME	N: R-3405-B E.J: V-5250	24"	24"	6"	8"
E-1	HEAVY DUTY	FLAT GRATE INLET AND FRAME	N: 3405-D4 OR EQUAL	30"	30"	6"	8"
E-7	HEAVY DUTY	BEEHIVE YARD GRATE	N: R-4215-C E: 6610	30"	30"	6"	8"
E-R	HEAVY DUTY	ROLLED CURB	N: R-3501-TR OR R3501-TL	30"	30"	6"	8"
C-1	HEAVY DUTY	FLAT GRATE INLET AND FRAME	EJ: 7585Z OR EQUAL	30"	46"	6"	8"
42 x 42	HEAVY DUTY	FLAT GRATE INLET AND FRAME	N: R-3801 OR EQUAL	42"	42"	6"	8"

NOTES:

1. N: = NEENAH FOUNDRY COMPANY AND E: = EAST JORDAN IRON WORKS, INC.
2. SEE STRUCTURE DATA TABLE FOR ADDITIONAL INFORMATION AND VARIATIONS.
3. TR OR TL FOR VANE ORIENTATION. USE FLAT TOP WITH APPROPRIATE OPENING.
4. INLET TYPE A-1 IS THE SAME AS TYPE "A" (MODIFIED)
5. LIP ONLY REQUIRED FOR INLET TYPE 'E-7'

STANDARD INLET

NOT TO SCALE

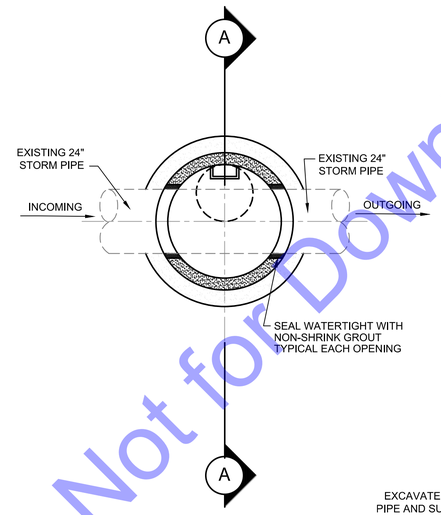

PLAN VIEW

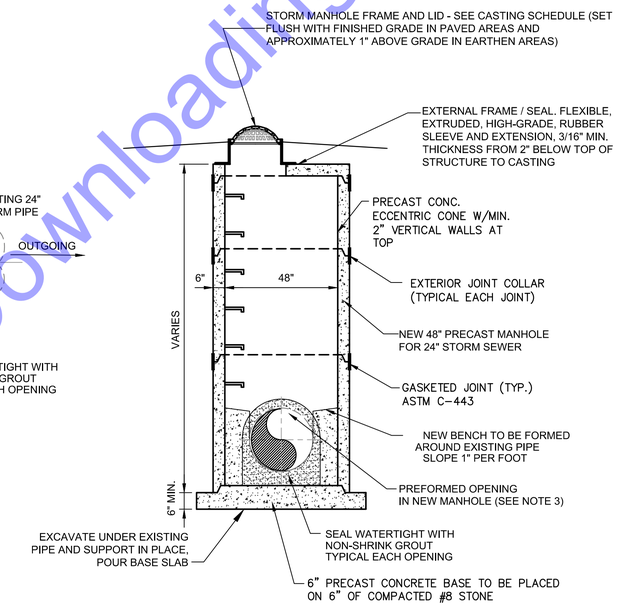

SECTION A

GENERAL NOTES:

1. NEW "DOG-HOUSE" MANHOLE SHALL BE AS SPECIFIED FOR STANDARD MANHOLES IN WM-9 "STANDARD MANHOLES"
2. ALL REINFORCING SHALL MEET ASTM C-478
3. HOLES IN PRECAST UNITS SHALL BE 4" MIN. TO 8" MAX. LARGER THAN THE OUTSIDE DIAMETER OF THE PROPOSED PIPE
4. A 3" BENCH IS REQUIRED FOR INLETS WITH DOWNSTREAM PIPE ONLY

"DOGHOUSE" STORM INLET DETAIL

NOT TO SCALE

STORM INLET FRAME AND LID SCHEDULE

CLASS	DESCRIPTION	FRAME AND LID NEENAH MODEL NO.	COMMENTS
HEAVY DUTY	ROUND FLAT OPEN GRATE FRAME AND CASTING	R-2502-G, OR EQUAL	UTILIZE IN PAVED AREAS OR AS NOTED ON PLANS
HEAVY DUTY	ROUND BEEHIVE FRAMING AND CASTING	R-2560-D8 OR EQUAL	UTILIZE IN EARTHEN AREAS OR AS NOTED ON PLANS

For Public Viewing Only - Not for Downloading

COMMONWEALTH ENGINEERS, INC.
A wealth of resources to create a common goal.
https://commonwealthengineers.com/

RYAN M. LAREAU
REGISTERED No. 11800145 STATE OF INDIANA
PROFESSIONAL ENGINEER

Signature 7-7-25 Date

CITY OF RENSSELAER
JASPER COUNTY, IN

7TH STREET IMPROVMENTS

© 2025 BY COMMONWEALTH ENGINEERS, INC. ALL RIGHTS RESERVED. REPRODUCTION IN ANY MEDIA IN WHOLE OR IN PART WITHOUT PERMISSION IS PROHIBITED

Indiana811 Know what's below. 811 before you dig. 1-800-382-5544 (IT'S THE LAW)

No.	Submittal / Revision	By	Date

Designed By:	Drawn By:	Checked By:
RML	JML	RM
Issue Date: ---	Project No: H25033	Scale: AS SHOWN

STORM SEWER DETAILS

Drawing No: C3-3

Sheet: 21 OF 26

File: Z:\SHARED\IN CLIENTS M-Z\RENSSELAER\D H25033 - 7TH STREET IMPROVEMENTS\06 CAD\A CURRENT FILES\1 DRAWINGS\05- MISCELLANEOUS DETAIL DRAWINGS.DWG
Saved: 7/3/2025 11:39:24 AM Plotted: 7/7/2025 2:12:23 PM, Current User: Joseph Lopez LastSavedBy: jlopez

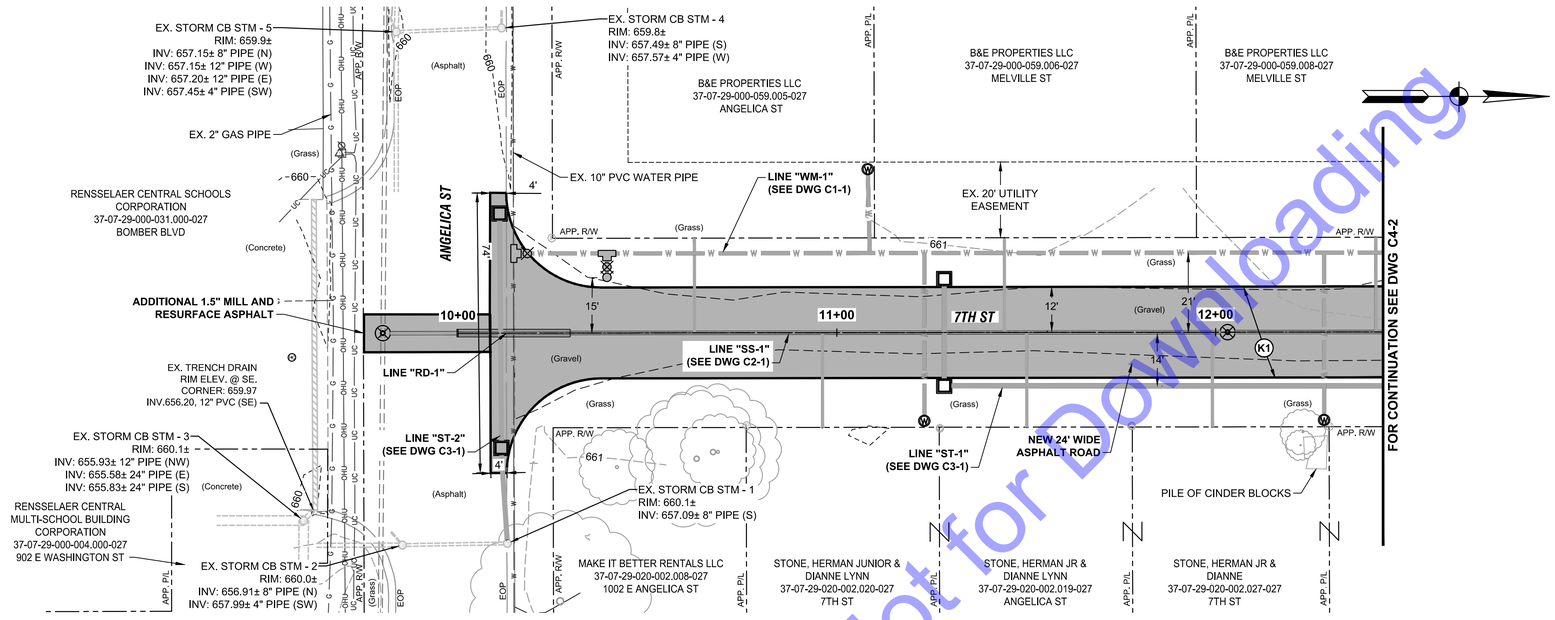

PLAN VIEW - LINE "RD-1"

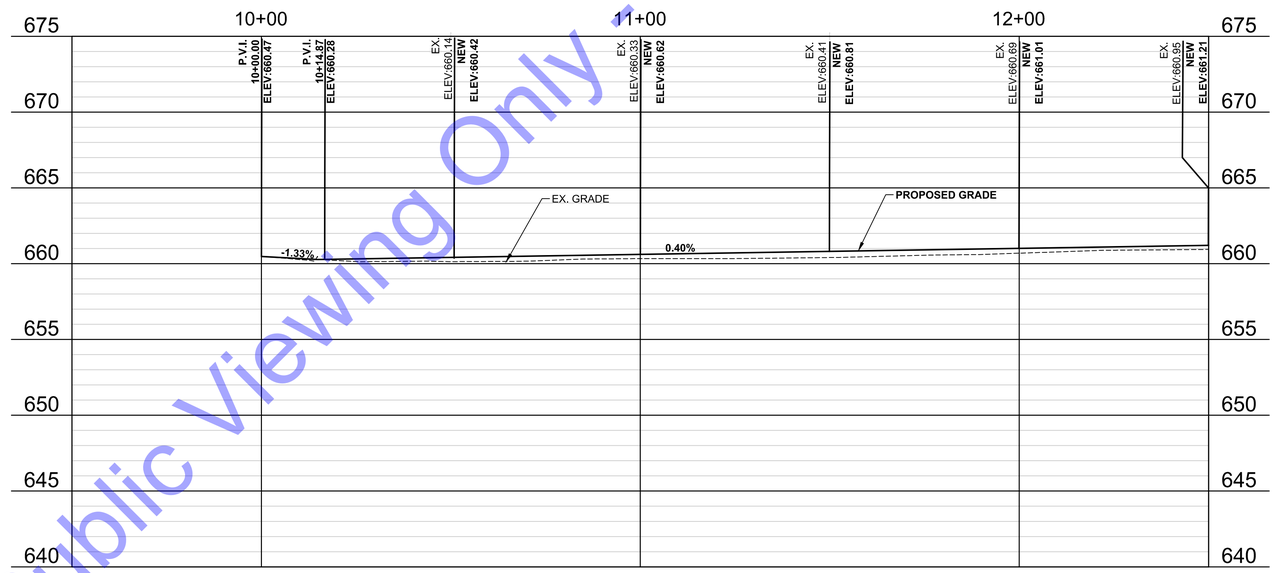

PROFILE VIEW - LINE "RD-1"

LEGEND:

(K1) 1.5" SURFACING LIMITS (SEE DWG TS1)

HORIZONTAL SCALE: 1" = 20'-0"
0 10' 20' 40' 60'

VERTICAL SCALE: 1" = 5'
0 5'

For Public Viewing Only - Not for Downloading

File: Z:\SHAREDIN CLIENTS MA\RENSSELAER\D H25033 - 7TH STREET IMPROVEMENTS\06 CADA CURRENT FILES\1 DRAWINGS\04- PLAN AND PROFILE DRAWINGS.DWG
Saved: 7/7/2025 2:07:28 PM Plotted: 7/7/2025 2:12:49 PM Current User: Joseph Lopez LastSavedBy: jlopez

COMMONWEALTH ENGINEERS, INC.
A wealth of resources to create a common goal.
https://commonwealthengineers.com/

REGISTERED No. 11800145 STATE OF INDIANA
RYAN M. LAREAU
PROFESSIONAL ENGINEER
Signature 7-7-25 Date

CITY OF RENSSELAER
JASPER COUNTY, IN

7TH STREET IMPROVMENTS

© 2025 BY COMMONWEALTH ENGINEERS, INC. ALL RIGHTS RESERVED. REPRODUCTION BY ANY METHOD IN WHOLE OR IN PART WITHOUT PERMISSION IS PROHIBITED

Indiana 811
Know what's below. 811 before you dig.
1-800-382-5544 (ITS THE LAW)

No.	Submittal / Revision	By	Date

Designed By:	Drawn By:	Checked By:
RML	JML	RM
Issue Date: ---	Project No: H25033	Scale: AS SHOWN

PLAN AND PROFILE VIEWS - LINE "RD-1"

Drawing No:
C4-1

Sheet: 22 OF 26

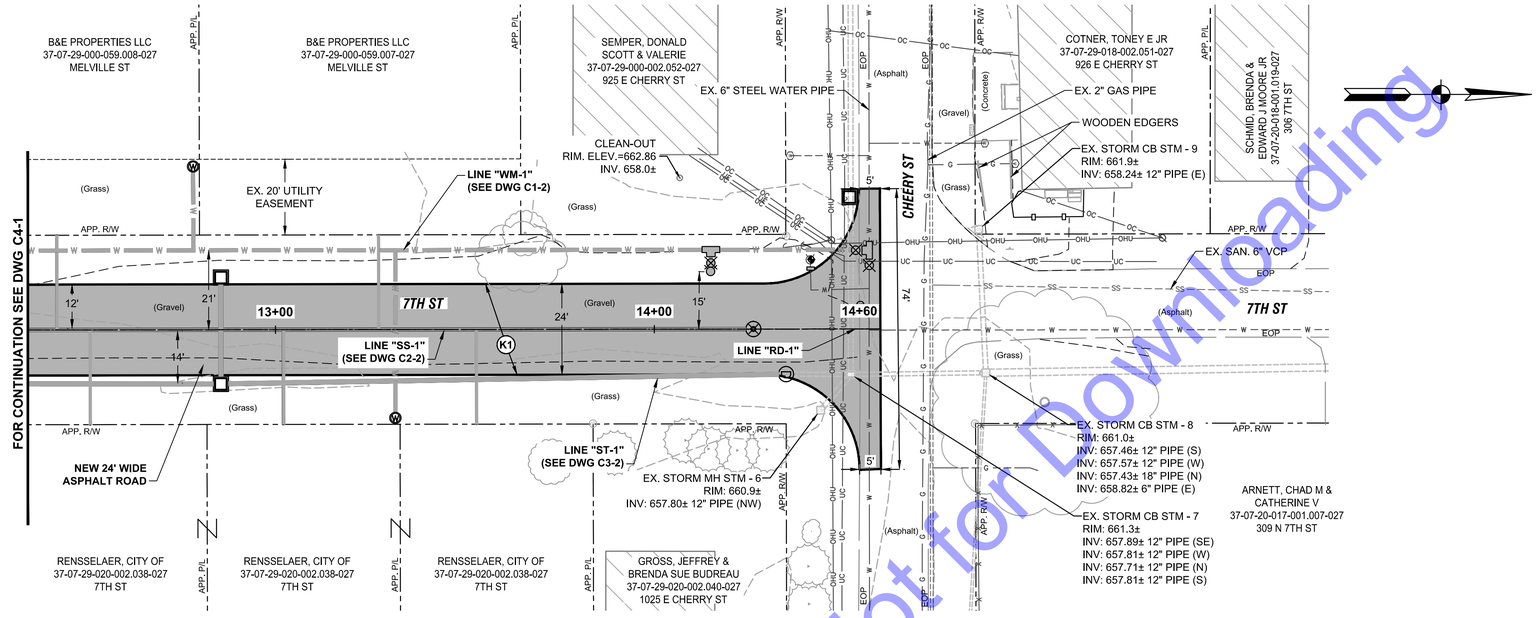

PLAN VIEW - LINE "RD-1"

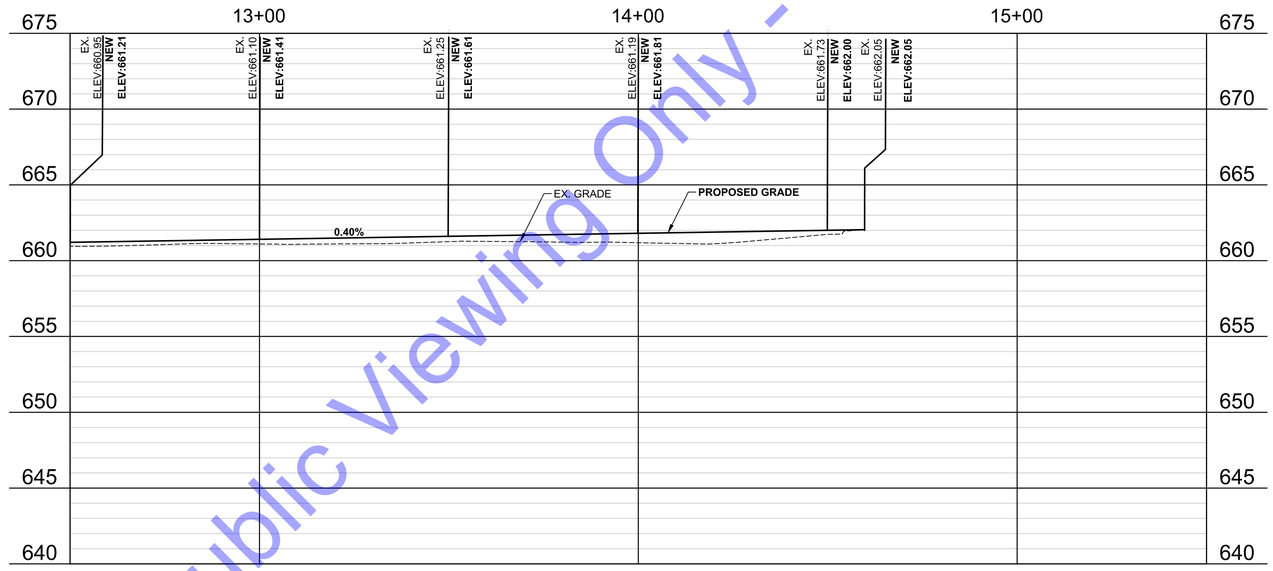

PROFILE VIEW - LINE "RD-1"

LEGEND:

(K1) **1.5" SURFACING LIMITS (SEE DWG TS1)**

HORIZONTAL SCALE: 1" = 20'-0"

0 10' 20' 40' 60'

VERTICAL SCALE: 1"=5'

0 5'

For Public Viewing Only - Not for Downloading

File: Z:\SHAREDIN CLIENTS MAZ\RENSSELAER\D H25033 - 7TH STREET IMPROVEMENTS\06 CADA CURRENT FILES\1 DRAWINGS\04- PLAN AND PROFILE DRAWINGS.DWG
Saved: 7/7/2025 2:07:28 PM Plotted: 7/7/2025 2:13:07 PM Current User: Joseph Lopez LastSavedBy: jlopez

COMMONWEALTH ENGINEERS, INC.
A wealth of resources to create a common goal.
https://commonwealthengineers.com/

REGISTERED No. 11800145 STATE OF INDIANA
RYAN M. LAREAU
PROFESSIONAL ENGINEER

Signature 7-7-25 Date

CITY OF RENSSELAER
JASPER COUNTY, IN

7TH STREET IMPROVMENTS

© 2025 BY COMMONWEALTH ENGINEERS, INC. ALL RIGHTS RESERVED. REPRODUCTION BY ANY METHOD IN WHOLE OR IN PART WITHOUT PERMISSION IS PROHIBITED

Indiana811
Know what's below. 811 before you dig.
1-800-382-5544
(ITS THE LAW)

No.	Submittal / Revision	By	Date

Designed By:	Drawn By:	Checked By:
RML	JML	RM
Issue Date:	Project No:	Scale:
---	H25033	AS SHOWN

PLAN AND PROFILE VIEWS - LINE "RD-1"

Drawing No:
C4-2

Sheet: 23 OF 26

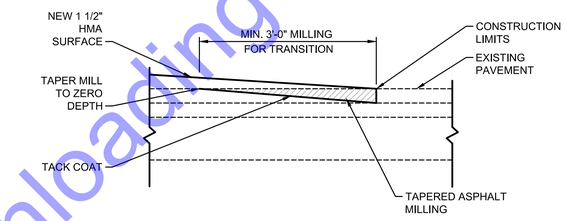

TRANSITION MILLING DETAIL

NOT TO SCALE

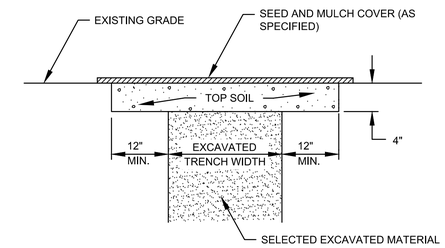

SURFACE RESTORATION DETAIL FOR GRASS AREAS

NOT TO SCALE

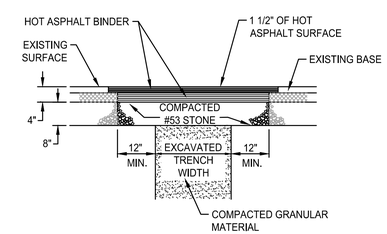

SURFACE RESTORATION DETAIL FOR ASPHALT PAVEMENT - ROAD

NOT TO SCALE

For Public Viewing Only - Not for Downloading

COMMONWEALTH ENGINEERS, INC.
A wealth of resources to make a common goal.
https://commonwealthengineers.com/

RYAN M. LAREAU
REGISTERED
No. 11800145
STATE OF INDIANA
PROFESSIONAL ENGINEER

Signature 7-7-25 Date

CITY OF RENSSELAER
JASPER COUNTY, IN

7TH STREET IMPROVMENTS

© 2025 BY COMMONWEALTH ENGINEERS, INC. ALL RIGHTS RESERVED. REPRODUCTION BY ANY METHOD WHOLE OR IN PART WITHOUT PERMISSION IS PROHIBITED

Indiana811 Know what's below. 811 before you dig. 1-800-382-5544 (ITS THE LAW)

No.	Submittal / Revision	By	Date

Designed By:	Drawn By:	Checked By:
RML	JML	RM
Issue Date: ---	Project No: H25033	Scale: AS SHOWN

ROAD CONSTRUCTION DETAILS

Drawing No:
C4-3

Sheet: 24 OF 26

File: Z:\SHAREDIN CLIENTS MAZ\RENSSELAER\D H25033 - 7TH STREET IMPROVEMENTS\06 CADA CURRENT FILES\1 DRAWINGS\05- MISCELLANEOUS DETAIL DRAWINGS.DWG
Saved: 7/3/2025 11:39:24 AM Plotted: 7/7/2025 2:13:19 PM Current User: Joseph Lopez LastSavedBy: jlopez

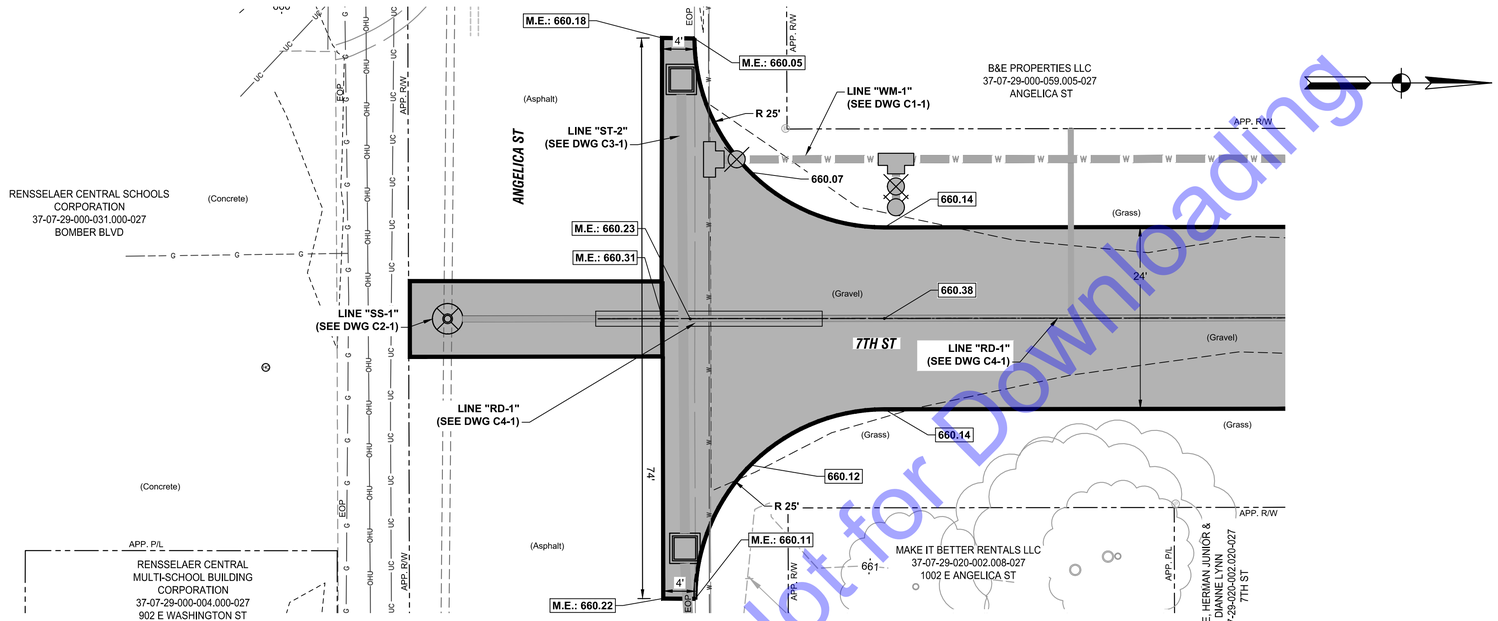

7TH ST AND ANGELICA ST

SCALE: 1"=10'-0"

0 10' 20'

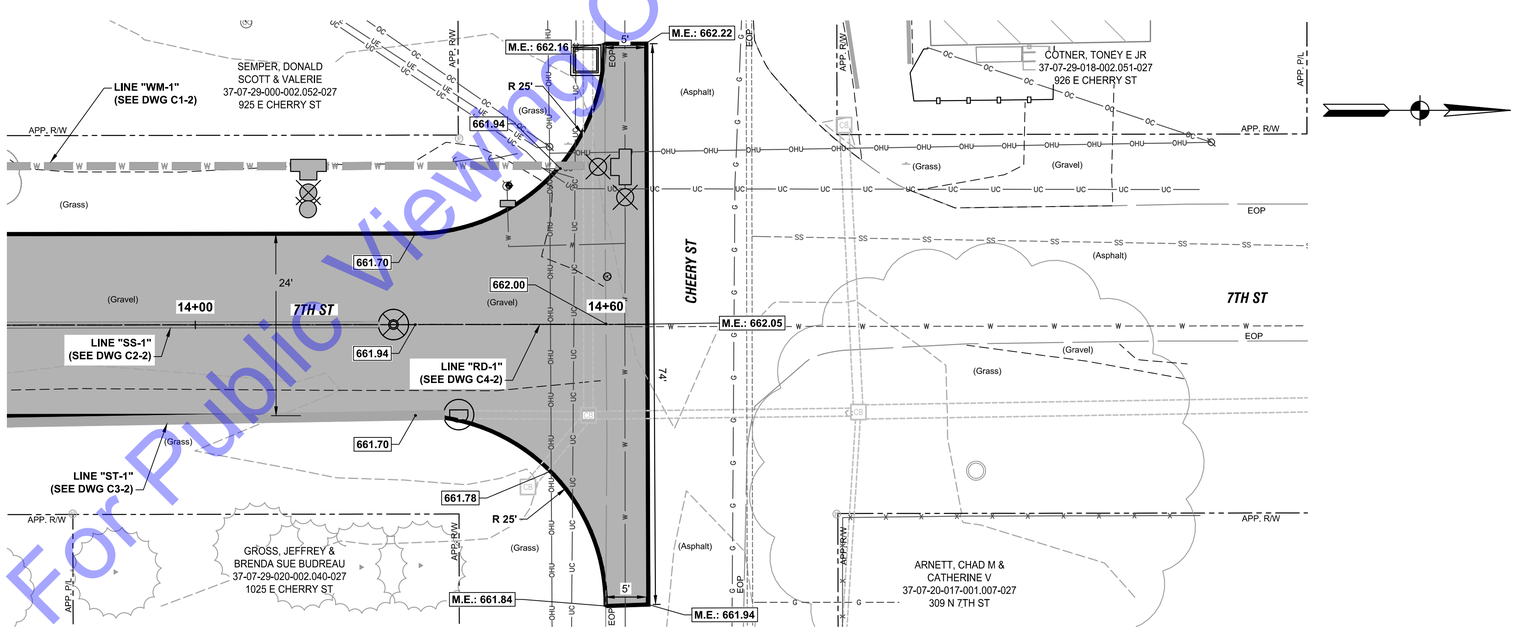

7TH ST AND CHERRY ST

SCALE: 1"=10'-0"

0 10' 20'

For Public Viewing Only - Not for Downloading

COMMONWEALTH ENGINEERS, INC.
A wealth of resources to create a common goal.
https://commonwealthengineers.com/

RYAN M. LAREAU
REGISTERED
No. 11800145
STATE OF INDIANA
PROFESSIONAL ENGINEER

Signature 7-7-25 Date

CITY OF RENSSELAER
JASPER COUNTY, IN

7TH STREET IMPROVMENTS

© 2025 BY COMMONWEALTH ENGINEERS, INC. ALL RIGHTS RESERVED. REPRODUCTION BY ANY METHOD WHOLE OR IN PART WITHOUT PERMISSION IS PROHIBITED

Indiana811
Know what's below. 811 before you dig.
1-800-382-5544
(ITS THE LAW)

No.	Submittal / Revision	By	Date

Designed By:	Drawn By:	Checked By:
RML	JML	RM
Issue Date:	Project No:	Scale:
---	H25033	AS SHOWN

INTERSECTION DETAILS

Drawing No:
C4-4

Sheet: 25 OF 26

File: Z:\SHAREDIN\CLIENTS\IA-ZRENSSELAER\D\H25033 - 7TH STREET IMPROVEMENTS\06 CADA CURRENT FILES\1 DRAWINGS\04- PLAN AND PROFILE DRAWINGS.DWG
Saved: 7/7/2025 2:21:46 PM Plotted: 7/7/2025 2:22:43 PM Current User: Joseph Lopez LastSavedBy: jlopez

MOT - 7TH ST

SCALE: 1"=10'-0"

0 10' 20'

A

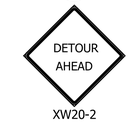

XW20-2

B

M4-10

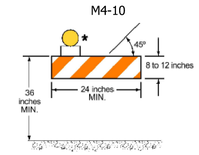

TYPE 1 BARRICADE **

TYPE 1 BARRICADE WITH M410 OR SIMILAR TO INDICATE DIRECTION OF DETOUR AS NEEDED.

G

R11-2
*

K

R11-4

* Road Closure Sign Assembly (RCSA)

LEGEND:

- Type III Barricade
- Construction Sign
- Detour Direction
- Work Zone

GENERAL NOTES:

1. ALL SIGNS, BARRICADES, AND OTHER TRAFFIC CONTROL DEVICES SHALL BE PLACED IN ACCORDANCE WITH LATEST EDITION OF THE INDIANA MUTCD AND INDOT STANDARDS.
2. CONTRACTOR IS RESPONSIBLE FOR PROPER IMPLEMENTATION AND MAINTENANCE OF THE TRAFFIC CONTROL PLAN.
3. MAINTAIN ACCESS TO DRIVEWAYS AT ALL TIMES OR COORDINATE CLOSURE WITH PROPERTY OWNER.
4. IMPLEMENT SIDE STREET BARRICADES AND RCSA AS NEEDED.
5. COORDINATE ROAD CLOSURES WITH CITY

For Public Viewing Only - Not for Downloading

COMMONWEALTH ENGINEERS, INC.
A wealth of resources to create a common goal.
https://commonwealthengineers.com/

RYAN M. LAREAU
REGISTERED
No. 11800145
STATE OF INDIANA
PROFESSIONAL ENGINEER

Signature 7-7-25 Date

CITY OF RENSSELAER
JASPER COUNTY, IN

7TH STREET IMPROVMENTS

© 2025 BY COMMONWEALTH ENGINEERS, INC. ALL RIGHTS RESERVED. REPRODUCTION BY ANY METHOD WHOLE OR IN PART WITHOUT PERMISSION IS PROHIBITED

Indiana 811
Know what's below. 811 before you dig.
1-800-382-5544
(ITS THE LAW)

No.	Submittal / Revision	By	Date

Designed By:	Drawn By:	Checked By:
RML	JML	RM
Issue Date:	Project No:	Scale:
---	H25033	AS SHOWN

MAINTENANCE OF TRAFFIC

Drawing No:
MOT1

Sheet: 26 OF 26

File: Z:\SHAREDIN\CLIENTS M-Z\RENSSELAER\H25033 - 7TH STREET IMPROVEMENTS\06 CADD\A CURRENT FILES\01 DRAWINGS\06- MOT DRAWINGS.DWG
Saved: 7/7/2025 9:32:00 AM Plotted: 7/7/2025 2:13:56 PM Current User: Joseph Lopez LastSavedBy: jlopez