SET NO.

TOWN OF NEWBURGH
WARRICK COUNTY, INDIANA

WASTEWATER TREATMENT PLANT
FLOW EQ BASIN
OCTOBER 2025

For Public Viewing Only-Not For Downloading

TOWN OF NEWBURGH TOWN COUNCIL

STACIE M KRIEGER _____ PRESIDENT
STEVE SHOEMAKER _____ MEMBER
ANNE RUST AURAND _____ MEMBER
PAUL PERRY _____ MEMBER
LEANNA K. HUGHES _____ MEMBER
CHRIS COOKE _____ TOWN MANAGER
ANDREA BALBONI _____ DEPUTY TOWN MANAGER
NANNETTE ANGEL _____ CLERK-TREASURER
RUSSELL POWELL _____ WW FACILITY SUPT.
CHRISTOPHER C. WISCHER _ TOWN ATTORNEY

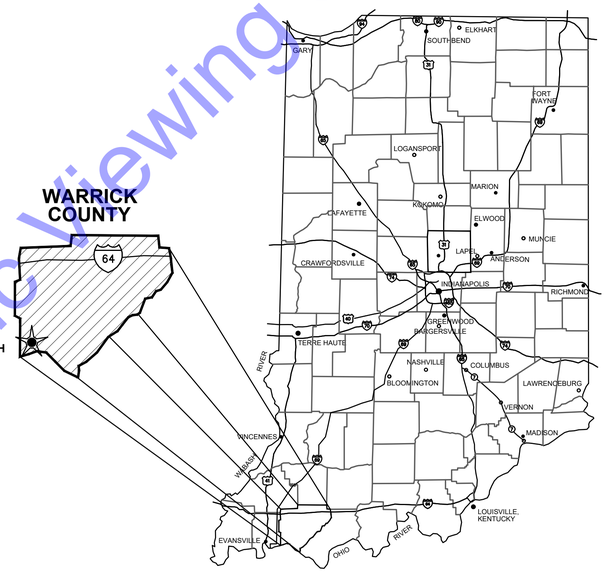

GENERAL LOCATION MAP

COMMONWEALTH ENGINEERS, INC.™
A wealth of resources to master a common goal.

QA/QC BY : DREW O. FLAMION, P.E. 10/03/25
DATE :

CERTIFIED BY : Rudolph J Notich 10/03/25
RUDOLPH J. NOTICH, P.E.
INDIANA P.E. No. 19400077
DATE :

RUDOLPH J. NOTICH REGISTERED No. PE19400077 INDIANA PROFESSIONAL ENGINEER

CONTRACT NO. : S18005-041

© 2025 BY COMMONWEALTH ENGINEERS, INC. ALL RIGHTS RESERVED. REPRODUCTION BY ANY METHOD IN WHOLE OR IN PART WITHOUT PERMISSION IS PROHIBITED

File: J:\NEWBURGH CLIENTS W-T\NEWBURGH\SHEETS ON CAD_SEWER ENG SHEETS\WWTP FLOW EQ BASIN\DR CAD\W CURRENT FILES\ DRAWINGS\01-GENERAL SHEETS - NEWBURGH EQ.DWG
Saved: 10/2/2025 1:47:14 PM Plotted: 10/2/2025 1:51:59 PM Current User: Drew Jenkins LastSavedBy: djenkins

PROJECT LOCATION MAP

SCALE: 1"=1000'-0"

0 1000' 2000'

For Public Viewing Only-Not For Downloading

SITE ADDRESS

TOWN OF NEWBURGH WWTP
6366 VANADA RD.
NEWBURGH, IN 47630

NOTIFICATION INFORMATION

ENGINEER:
COMMONWEALTH ENGINEERS, INC.
420 NW 5TH ST, SUITE 201
EVANSVILLE, IN 47708
(812) 474-1177

OWNER:
TOWN OF NEWBURGH
23 WEST JENNINGS STREET
P.O. BOX 6
NEWBURGH, IN 47630
(812) 475-1012

UTILITY CONTACTS

SEWER - NEWBURGH SEWER DEPARTMENT
SUPT. RUSSELL POWELL
P.O. BOX 100
NEWBURGH, IN 47629
(812) 853-6412

CENTERPOINT ENERGY
JON EASTHAM
1 N MAIN ST.
EVANSVILLE, IN 47711
(765) 287-2119
publicproject@centerpointenergy.com

WATER UTILITY - INDIANA AMERICAN WATER COMPANY
SUPT. ROGER JOHNSON
5622 STATE ROAD 66
PO BOX 186
NEWBURGH, IN 47629
(812) 853-3355
roger.johnson@amwater.com

AT&T COMMUNICATION
JOHN R. CHAPMAN
134 NW 6TH ST.
EVANSVILLE, IN 47708
(812) 431-8291
jc7161@att.com

ASTOUND
JONATHAN ENGLE
6600 HANK AVE.
EVANSVILLE, IN 47715
(812) 305-4756
Jonathan.Engle@Astound.com

COMMONWEALTH ENGINEERS, INC.
A wealth of resources to master a common goal.
https://commonwealthengineers.com/

RUDOLPH J NOLTICH
REGISTERED
No. PE19400077
INDIANA PROFESSIONAL ENGINEER

Signature 10/03/2025 Date

TOWN OF NEWBURGH
WARRICK COUNTY, INDIANA

WASTEWATER TREATMENT
PLANT FLOW EQ BASIN

© 2025 BY COMMONWEALTH ENGINEERS, INC. ALL RIGHTS RESERVED. REPRODUCTION OR USE OF THIS DRAWING IN WHOLE OR IN PART WITHOUT PERMISSION IS PROHIBITED

Indiana 811 Know what's below. 811 before you dig. 1-800-382-5544 (ITS THE LAW)

No.	Submittal / Revision	By	Date

Designed By:	Drawn By:	Checked By:
DOF	DMJ	ETP
Issue Date:	Project No:	Scale:
10/03/25	S18005-041	AS SHOWN

PROJECT LOCATION MAP

Drawing No:
G02
Sheet: 02 OF 161

File: Z:\SHARED\IN CLIENTS M-Z\NEWBURGH\S18005 ON CALL SEWER ENG SVCS\041 WWTP FLOW EQ BASIN\06 CADA CURRENT FILES\ 1 DRAWINGS\01-GENERAL SHEETS - NEWBURGH EQ.DWG
Saved: 10/2/2025 1:47:14 PM Plotted: 10/2/2025 1:52:03 PM Current User: Drew Jenkins LastSavedBy: djenkins

DRAWING SET INDEX		
SHEET No.	DRAWING No.	TITLE
GENERAL DRAWINGS		
01	G01	TITLE SHEET
02	G02	PROJECT LOCATION MAP
03	G03	DRAWING SET INDEX
04	G04	SYMBOLS, ABBREVIATIONS, AND GENERAL NOTES
05	G05	SURVEY CONTROL PLAN
06	G06	OVERALL WORK PLAN AND FUTURE PLANT STRUCTURE
07	G07	PROCESS FLOW DIAGRAM
08	G08	HYDRAULIC PROFILE - EX. LS NO. 3 TO EQ BASIN
09	G09	HYDRAULIC PROFILE - EQ BASIN TO EX. LS NO. 3
10	G10	PHOTO LOG PLAN
11	G11	PHOTO LOG
12	G12	PHOTO LOG
CIVIL DRAWINGS		
13	CD-01	SITE DEMOLITION PLAN
14	C-01	SITE IMPROVEMENTS PLAN
15	C-02	SITE PIPING IMPROVEMENTS PLAN
16	C-03	SITE PIPING IMPROVEMENTS - NORTH ENLARGED PLAN
17	C-04	SITE PIPING IMPROVEMENTS - WEST ENLARGED PLAN
18	C-05	SITE PIPING IMPROVEMENTS - SOUTH ENLARGED PLAN
19	C-06	SITE IMPROVEMENTS LOCATION KEY PLAN
20	C-07	SITE IMPROVEMENTS LOCATION PLAN - NORTH
21	C-08	SITE IMPROVEMENTS LOCATION PLAN - SOUTH
22	C-09	SITE IMPROVEMENTS LOCATION DATA TABLE
23	C-10	SITE GRADING PLAN
24	C-11	SITE DRIVE PLAN AND PROFILES
25	C-12	MANDATORY ALTERNATE NO. 1 PLAN
HYDROGEN SULFIDE (H2S) REMOVAL FACILITY		
26	D1-01	NEW H2S REMOVAL FACILITY ISOMETRICS
27	D1-02	NEW H2S REMOVAL FACILITY UPPER PLAN
28	D1-03	NEW H2S REMOVAL FACILITY MID PLAN
29	D1-04	NEW H2S REMOVAL FACILITY LOWER PLAN
30	D1-05	NEW H2S REMOVAL FACILITY SECTIONS I
31	D1-06	NEW H2S REMOVAL FACILITY SECTIONS II
32	D1-07	NEW H2S REMOVAL FACILITY SECTIONS III
33	D1-08	NEW H2S REMOVAL FACILITY TO HEADWORKS ISOMETRIC AND SECTION
HEADWORKS		
34	D2-01	NEW HEADWORKS ISOMETRIC
35	D2-02	NEW HEADWORKS LOWER PLAN
36	D2-03	NEW HEADWORKS UPPER PLAN
37	D2-04	NEW HEADWORKS SECTION I
38	D2-05	NEW HEADWORKS SECTION II
39	D2-06	NEW HEADWORKS SECTION III
40	D2-07	NEW HEADWORKS ELEVATIONS
EQUALIZATION BASIN		
41	D3-01	NEW FLOW EQ TANK ISOMETRIC
42	D3-02	NEW FLOW EQ TANK PLAN
43	D3-03	NEW FLOW EQ TANK SECTIONS
44	D3-04	NEW FLOW EQ TANK ELEVATIONS
45	D3-05	NEW FLOW EQ TANK EQUIPMENT DETAILS
PIPELINES		
46	D4-01	NEW LS NO. 3 FORCE MAIN SEWER PLAN AND PROFILE - LINE "A"
47	D4-02	NEW LS NO. 3 FORCE MAIN SEWER PLAN AND PROFILE - LINE "A"
48	D5-01	NEW LS NO. 2 FORCE MAIN SEWER PLAN AND PROFILE - LINE "B"
49	D5-02	NEW LS NO. 2 FORCE MAIN SEWER PLAN AND PROFILE - LINE "B"
50	D6-01	NEW GRAVITY SEWER PLAN AND PROFILE - LINE "C"
51	D7-01	NEW EQ TANK DRAIN LINE PLAN AND PROFILE - LINE "D"
52	D7-02	EX. LIFT STATION NO. 3 MODIFICATION PLAN, SECTION, AND DETAILS
53	D8-01	NEW HEADWORKS TO EQ PROCESS PIPING PLAN AND PROFILE - LINE "E"
54	D9-01	NEW STORM DRAIN OUTFALL PLAN AND PROFILE - LINE "F"
55	D10-01	NEW STORM DRAIN PLAN AND PROFILE - LINE "G"
56	D11-01	NEW STORM DRAIN PLAN AND PROFILE - LINE "H"
57	D12-01	NEW CASING FOR FUTURE USE PLAN AND PROFILE - LINE "I"
58	D13-01	NEW SLUDGE FORCE MAIN PLAN AND PROFILE - LINE "J"
NON-POTABLE & POTABLE WATER SYSTEM		
59	D14-01	NON-POTABLE & POTABLE WATER SCHEMATIC
60	D14-02	NON-POTABLE WATER PLAN

DRAWING SET INDEX		
SHEET No.	DRAWING No.	TITLE
EROSION CONTROL DRAWINGS		
61	EC1	SWPPP NOTES I
62	EC2	SWPPP NOTES II
63	EC3	SWPPP FIGURES I
64	EC4	SWPPP FIGURES II
65	EC5	EROSION CONTROL PLAN I
66	EC6	EROSION CONTROL PLAN II
67	EC7	EROSION CONTROL DETAILS I
68	EC8	EROSION CONTROL DETAILS II
MISCELLANEOUS DETAILS		
69	MD01	MISCELLANEOUS DETAILS I
70	MD02	MISCELLANEOUS DETAILS II
71	MD03	MISCELLANEOUS DETAILS III
72	MD04	MISCELLANEOUS DETAILS IV
73	MD05	MISCELLANEOUS DETAILS V
74	MD06	MISCELLANEOUS DETAILS VI
75	MD07	MISCELLANEOUS DETAILS VII
76	MD08	MISCELLANEOUS DETAILS VIII
77	MD09	MISCELLANEOUS DETAILS IX
78	MD10	MISCELLANEOUS DETAILS X
79	MD11	MISCELLANEOUS DETAILS XI
STRUCTURAL DRAWINGS		
80	S0-1	GENERAL STRUCTURAL NOTES - 01
81	S0-2	GENERAL STRUCTURAL NOTES - 02
82	S0-3	TYPICAL STRUCTURAL DETAILS - CONCRETE - 01
83	S0-4	TYPICAL STRUCTURAL DETAILS - CONCRETE - 02
84	S0-5	TYPICAL STRUCTURAL DETAILS - MASONRY - 01
85	S0-6	TYPICAL STRUCTURAL DETAILS - MASONRY - 02
86	S0-7	TYPICAL STRUCTURAL DETAILS - FRAMING - 01
87	S0-8	TYPICAL STRUCTURAL DETAILS - STAIRS AND PLATFORMS - 01
88	S0-9	TYPICAL STRUCTURAL DETAILS - STAIRS AND PLATFORMS - 02
89	S0-10	TYPICAL STRUCTURAL DETAILS - STAIRS AND PLATFORMS - 03
90	S1-1	NEW H2S REMOVAL FACILITY - FOUNDATION PLAN
91	S1-2	NEW H2S REMOVAL FACILITY - INTERMEDIATE LEVEL PLAN
92	S1-3	NEW H2S REMOVAL FACILITY - UPPER LEVEL PLAN
93	S1-4	NEW H2S REMOVAL FACILITY - SECTIONS AND DETAILS
94	S1-5	NEW H2S REMOVAL FACILITY - SECTIONS AND DETAILS
95	S1-6	NEW H2S REMOVAL FACILITY - SECTIONS AND DETAILS
96	S1-7	NEW H2S REMOVAL FACILITY - STAIR FRAMING PLANS
97	S2-1	NEW HEADWORKS - FOUNDATION AND SLAB-ON-GROUND PLAN
98	S2-2	NEW HEADWORKS - LOWER LEVEL CHANNEL PLAN
99	S2-3	NEW HEADWORKS - UPPER LEVEL CHANNEL PLAN
100	S2-4	NEW HEADWORKS - INTERMEDIATE FRAMING PLAN
101	S2-5	NEW HEADWORKS - ROOF FRAMING PLAN
102	S2-6	NEW HEADWORKS - STAIR FRAMING PLANS
103	S2-7	NEW HEADWORKS - STAIR FRAMING PLANS
104	S2-8	NEW HEADWORKS - STAIR FRAMING PLANS
105	S2-9	NEW HEADWORKS - SECTIONS AND DETAILS
106	S2-10	NEW HEADWORKS - SECTIONS AND DETAILS
107	S2-11	NEW HEADWORKS - SECTIONS AND DETAILS
108	S2-12	NEW HEADWORKS - SECTIONS AND DETAILS
109	S2-13	NEW HEADWORKS - SECTIONS AND DETAILS
110	S2-14	NEW HEADWORKS - SECTIONS AND DETAILS
111	S2-15	NEW HEADWORKS - SECTIONS AND DETAILS
112	S2-16	NEW HEADWORKS - SECTIONS AND DETAILS
113	S2-17	NEW HEADWORKS - TYPICAL DETAILS
114	S2-18	NEW HEADWORKS - MANDATORY ALTERNATE DETAILS
115	S3-1	NEW FLOW EQ TANK - OVERALL PLAN
116	S3-2	NEW FLOW EQ TANK - STAIR PLANS
117	S3-3	NEW FLOW EQ TANK - STAIR PLANS
118	S3-4	NEW FLOW EQ TANK - TYPICAL STAIR FRAMING SECTIONS AND ELEVATIONS
119	S4-1	NON-POTABLE WATER PUMP - WALKWAY FRAMING PLAN
120	S4-2	NON-POTABLE WATER PUMP - SECTIONS AND DETAILS
121	S5-1	EXISTING LIFT STATION MODIFICATIONS - PLAN AND SECTION
122	TS-001	TANK PLAN AND SECTION
123	TS-002	FOUNDATION PLAN & PILE LAYOUT
124	TS-003	WALL AND FOOTER
125	TS-004	TANK DRAIN

DRAWING SET INDEX		
SHEET No.	DRAWING No.	TITLE
ARCHITECTURAL		
126	A0-1	NEW HEADWORKS BUILDING - 1ST FLOOR LIFE SAFETY PLAN & CODE ANALYSIS.
127	A0-2	NEW HEADWORKS BUILDING - 2ND FLOOR LIFE SAFETY PLAN
128	A1-1	NEW HEADWORKS BUILDING - 1ST FLOOR PLAN
129	A1-2	NEW HEADWORKS BUILDING - 2ND FLOOR PLAN
130	A1-3	NEW HEADWORKS BUILDING - ROOF PLAN
131	A2-1	NEW HEADWORKS BUILDING - EXTERIOR ELEVATIONS
132	A3-1	NEW HEADWORKS BUILDING - BUILDING SECTIONS
133	A4-1	NEW HEADWORKS BUILDING - SCHEDULES & DETAILS
MECHANICAL		
134	M0-0	MECHANICAL LEGENDS AND SCHEDULES
135	M1-0	MECHANICAL LEGENDS AND SCHEDULES
136	M1-1	UPPER LEVEL MECHANICAL PLAN
137	M1-2	LOWER LEVEL MECHANICAL PLAN
138	M2-0	MECHANICAL DETAILS
139	M2-1	MECHANICAL DETAILS
ELECTRICAL		
140	E0-0	ELECTRICAL LEGENDS AND SCHEDULES
141	E1-0	ELECTRICAL SITE DEMOLITION PLAN
142	E1-1	ELECTRICAL SITE IMPROVEMENTS PLAN
143	E1-2	ELECTRICAL RISER
144	E1-3	ELECTRICAL ONE LINE - NEW HEADWORKS
145	E1-4	ELECTRICAL ONE LINE - LS3
146	E1-5	ELECTRICAL ONE LINE - UV
147	E2-0	NEW H2S REMOVAL FACILITY ELECTRICAL PLAN
148	E2-1	NEW HEADWORKS LOWER ELECTRICAL PLAN
149	E2-2	NEW HEADOWRKS UPPER ELECTRICAL PLAN
150	E2-3	NEW HEADWORKS LOWER LIGHTNING PLAN
151	E2-4	NEW HEADWORKS UPPER LIGHTING PLAN
152	E2-5	NEW HEADWORKS STAIRWELL LIGHTING SECTION VIEWS
153	E2-6	NEW FLOW EQ TANK ELECTRICAL PLAN
154	E3-0	ELECTRICAL PROCESS AND INSTRUMENTATION I
155	E3-1	ELECTRICAL PROCESS AND INSTRUMENTATION II
156	E3-2	ELECTRICAL PROCESS AND INSTRUMENTATION III
157	E3-3	NETWORK DIAGRAM
158	E4-0	ELECTRICAL DETAILS I
159	E4-1	ELECTRICAL DETAILS II
160	E4-2	ELECTRICAL DETAILS III
161	E4-3	ELECTRICAL DETAILS IV

For Public Viewing Only
Not For Downloading

COMMONWEALTH ENGINEERS, INC.
A wealth of resources to master a common goal.
https://commonwealthengineers.com/

RUDOLPH J. NOLTICH
REGISTERED
No. PE19400077
INDIANA
PROFESSIONAL ENGINEER

Signature 10/03/2025 Date

TOWN OF NEWBURGH
WARRICK COUNTY, INDIANA

WASTEWATER TREATMENT
PLANT FLOW EQ BASIN

© 2025 BY COMMONWEALTH ENGINEERS, INC. ALL RIGHTS RESERVED. REPRODUCTION OR USE OF THIS DRAWING WHOLE OR IN PART WITHOUT PERMISSION IS PROHIBITED

Know what's below. 811 before you dig.
1-800-382-5544
(IT'S THE LAW)

No.	Submittal / Revision	By	Date

Designed By:	Drawn By:	Checked By:
DOF	DMJ	ETP
Issue Date: 10/03/25	Project No: S18005-041	Scale: AS SHOWN

DRAWING SET INDEX

Drawing No:
G03
Sheet: 03 OF 161

File: Z:\SHARED\IN CLIENTS M-Z\NEWBURGH\S18005 ON CALL SEWER ENG SVCS\041 WWTP FLOW EQ BASIN\05 CADA CURRENT FILES\01 DRAWINGS\01-GENERAL SHEETS - NEWBUGH EQ.DWG
Saved: 10/2/2025 3:32:09 PM Plotted: 10/2/2025 3:32:45 PM Current User: Drew Jenkins LastSavedBy: djenkins

GENERAL ABBREVIATIONS

A	AIR
AB	ANCHOR BOLT
AFF	ABOVE FINISH FLOOR
ALT	ALTERNATE
ALUM	ALUMINUM
@	AT
APP.	APPARENT
ATT	AERATION TANK TRANSFER
AUTO	AUTOMATIC
AVG	AVERAGE
B	BAFFLE
BLDG	BUILDING
BM	BENCH MARK
BOT	BOTTOM
BRG	BEARING
CFM	CUBIC FEET PER MINUTE
CL	CENTERLINE
CO	CLEAN OUT
COL/C	COLUMN
CONC	CONCRETE
COP	COPPER
CJ	CONSTRUCTION JOINT
CP	CONTROL POINT
CW	COLD WATER
CY	CUBIC YARD
D	DRAIN
DEC	DECANT
DIA	DIAMETER
DIM	DIMENSION
DI	DUCTILE IRON PIPE
DL	DEAD LOAD
DSPT	DOWN SPOUT
DWG	DRAWING
E	ELECTRICAL CONDUIT
EA	EACH
EF	EACH FACE
EFFL	EFFLUENT
EL	ELEVATION
EW	EACH WAY
EX	EXISTING
EXF	EXHAUST FAN
EXP JT	EXPANSION JOINT
F	FILTER
FCAR	FLANGED COUPLING ADAPTER, RESTRAINED
FD	FLOOR DRAIN
FDN	FOUNDATION
FFE	FINISHED FLOOR ELEVATION
FH	FIRE HYDRANT
FLD	FILTRATE DRAIN
FLG	FLANGE
FL	FLUSHING LINE
FLR	FLOOR
FM	FORCE MAIN
FRP	FIBER REINFORCED PLASTIC
FT	FEET OR FOOT
FTG	FOOTING
FW	FINISHED WATER
G	GAS
GALV	GALVANIZED
GEN	GENERAL
GRD	GROUND OR GRADE
HB	HOSE BIBB
HORIZ	HORIZONTAL
HP	HORSEPOWER
HW	HOT WATER
ID	INSIDE DIAMETER
IJ	ISOLATION JOINT
INV	INVERT
IP	IRON PIN
LAV	LAVATORY
LB	POUND
LL	LIVE LOAD
LLV	LONG LEG VERTICAL
LTG	LIGHTING
MAX	MAXIMUM
MCC	MOTOR CONTROL CENTER
MGD	MILLION GALLONS PER DAY
MH	MANHOLE
MIN	MINIMUM, MINUTE
MJ	MECHANICAL JOINT
NC	NORMALLY CLOSED
NG	NATURAL GAS
NIC	NOT IN CONTRACT
NO	NORMALLY OPEN
NO.	NUMBER
NPW	NON-POTABLE WATER
OC	ON CENTER
OD	OUTSIDE DIAMETER
OPG	OPENING
OPP	OPPOSITE
PB	PULL BOX
PE	POLYETHYLENE EXP. JT. MATERIAL
P/L	PROPERTY LINE
POJ	PUSH ON JOINT
PSF	POUNDS PER SQUARE FOOT
PSI	POUNDS PER SQUARE INCH
PVC	POLYVINYL CHLORIDE
PW	POTABLE WATER
R	RECIRCULATION
RAD	RADIUS
RAS	RETURN ACTIVATED SLUDGE
RCP	REINFORCED CONCRETE PIPE
RD	ROOF DRAIN
REINF	REINFORCING
REQ'D	REQUIRED
R/W (ROW)	RIGHT-OF-WAY
SAN	SANITARY
SAS	SANITARY SEWER
SCH	SCHEDULE
SECT	SECTION
SF	SQUARE FEET
SHT	SHEET
SL	SAMPLE LINE
SOS	STORM SEWER
SP	STOP PLATE
SQ	SQUARE
STD	STANDARD
S STL, SS	STAINLESS STEEL
STL	STEEL
SUP	SUPERNATANT
SY	SQUARE YARD
TOS	TOP OF SLAB
TOW	TOP OF WALL
TW	TERTIARY WATER
TYP	TYPICAL
V	VACUUM OR VALVE
VAR	VARIES
VERT	VERTICAL
W	WEIR
W/	WITH
W/O	WITHOUT
WAS	WASTE ACTIVATED SLUDGE
WC	WATER CLOSET
WH	WATER HEATER
WL	WATER LINE
WWF	WELDED WIRE FABRIC
YH	YARD HYDRANT

GENERAL NOTES

1. ALL PROPERTY AND RIGHT-OF-WAY LINES INFORMATION SHOWN IN DRAWING SET ARE APPARENT AND SHALL NOT BE DEEMED EXACT LOCATIONS, UNLESS OTHERWISE NOTED. INFORMATION WAS OBTAINED VIA "INDIANA ON-LINE" GIS WEBSITE.
2. EXISTING UTILITY INFORMATION SHOWN IN DRAWING SET, MEETS "ASCE 36-02" QUALITY LEVEL **"C"**, UNLESS OTHERWISE NOTED.

   UTILITY COORDINATION AND PROJECT DEPICTION OF EXISTING SUBSURFACE UTILITY DATA:

   UTILITY QUALITY LEVEL DESCRIPTIONS:

   UTILITY QUALITY LEVEL A - PRECISE HORIZONTAL AND VERTICAL LOCATION OF UTILITIES OBTAINED BY THE ACTUAL EXPOSURE (OR VERIFICATIONS OF PREVIOUSLY EXPOSED AND SURVEYED UTILITIES) AND SUBSEQUENT MEASUREMENT OF SUBSURFACE UTILITIES, USUALLY AT A SPECIFIC POINT. ACCURACY OF LOCATION MATCHES PROJECT SURVEY TOLERANCE.

   UTILITY QUALITY LEVEL B - INFORMATION OBTAINED THROUGH THE APPLICATION OF APPROPRIATE SURFACE GEOPHYSICAL METHODS TO DETERMINE THE EXISTENCE AND APPROXIMATE HORIZONTAL POSITION SUBSURFACE UTILITIES. THE RELIABILITY OF THIS INFORMATION IS SURVEYED TO PROJECT CONTROL AND SUBJECT TO ACCURACY LEVELS OF THE GEOPHYSICAL TOLERANCE DEFINED BY THE PROJECT.

   UTILITY QUALITY LEVEL C - INFORMATION OBTAINED BY SURVEYING AND PLOTTING VISIBLE ABOVE GROUND UTILITY FEATURES AND CORRELATING QUALITY LEVEL "D" INFORMATION.

   UTILITY QUALITY LEVEL D - INFORMATION DERIVED FROM EXISTING RECORDS OR VERBAL RECOLLECTIONS.
3. NORTHING AND EASTING COORDINATES SHOWN ON ALL MANHOLE, INLETS, ETC. ARE SHOWN FROM CENTER OF STRUCTURE NOT CASTING, UNLESS OTHERWISE NOTED.
4. WHERE IMPROVEMENTS ARE SHOWN OR LABELED AS FUTURE, IT SHALL BE UNDERSTOOD THAT THIS WORK IS TO BE PERFORMED "BY OTHERS" IN FUTURE PHASES. INTENT IS TO PROVIDE CONTRACTOR INSIGHT & CONSIDERATION FOR FUTURE WORK TASKS.

GENERAL SCHEMATIC LEGEND

- QUICK DISCONNECT
- FLANGED SPOOL SECTION
- PRV — PRESSURE REDUCER VALVE
- FLANGED COUPLING ADAPTER
- BALL CHECK VALVE
- MOTOR ACTUATOR
- FLEXIBLE CONNECTION
- SCR — FLANGE FILLER & S.S. MESH SCREEN
- W V90 — 90° V-NOTCH WEIR
- M — MAGNETIC FLOW METER
- ULTRASONIC SENSOR
- SUBMERSIBLE PUMP
- NEW PIPING AND EQUIPMENT
- EXISTING PIPING AND EQUIPMENT
- FUTURE PIPING AND EQUIPMENT
- BOOSTER PUMP
- ARV — AIR RELIEF VALVE
- FM — FLOW METER
- GV — GATE VALVE
- FCV — FLOW CONTROL VALVE
- VALVE
- ECCENTRIC PLUG VALVE
- CHECK VALVE
- INCREASER / REDUCER
- BV — BUTTERFLY VALVE
- PIPE THROUGH FLOOR / WALL
- BALL VALVE
- BLIND FLANGE OR PLUG
- HOSE BIBB
- STOP PLATE
- W — WEIR

HATCHING SYMBOLS

- -CMU WALL (PLAN VIEW) -GRANULAR BACKFILL (PROFILE VIEW)
- - DEMOLITION (CONTRACTOR SHALL REFER TO DETAILED SPECIFICATIONS)
- - GROUT
- - CONCRETE
- - STEEL
- - COMPACTED GRANULAR BACKFILL OR COMPACTED FOUNDATION
- - ABANDONED IN PLACE
- - GRAVEL DRIVEWAY
- - CLASS I RIPRAP
- - HEAVY DUTY ASPHALT PAVEMENT

DISCLAIMER NOTE:
THIS DRAWING REFLECTS TYPICAL INFORMATION, SOME MAY NOT BE APPLICABLE TO THIS PROJECT.

DRAWING SET LEGEND

- EXOHT — EXOHT — EXISTING OVERHEAD TELEPHONE LINE
- EXG — EXG — EXISTING GAS LINE AND VALVE
- EXW — EXW — EXISTING WATER LINE AND VALVE
- EXF/O — EXF/O — EXISTING FIBER OPTIC LINE
- EXOHE — EXOHE — EXISTING OVERHEAD ELECTRIC LINE
- EXBE — EXBE — EXISTING BURIED ELECTRIC
- NPW — NPW — NPW — EXISTING NON-POTABLE WATER LINE
- POT — POT — POT — EXISTING POTABLE WATER LINE
- EXFM — EXFM — EXISTING FORCE MAIN
- EXISTING SANITARY SEWER
- EXBT — EXISTING BURIED TELEPHONE LINE
- X — X — X — X — EXISTING FENCE
- APP. R/W — APPARENT RIGHT-OF-WAY
- APP. P/L — APPARENT PROPERTY LINE
- EDGE OF ROAD
- EDGE OF ROAD WITH CURB
- 785 — EXISTING MAJOR CONTOUR LINE
- 784 — EXISTING MINOR CONTOUR LINE
- **CONSTRUCTION LIMITS**
- W — W — W — W — **NEW WATER LINE**
- **NEW SANITARY SEWER LINE**
- **NEW FORCE MAIN**
- x — x — x — **NEW FENCE**
- 785 — **NEW MAJOR CONTOUR LINE**
- 784 — **NEW MINOR CONTOUR LINE**
- AC UNIT
- BOLLARD
- BOULDER / LARGE ROCK
- CL — CENTER LINE MONUMENT
- CONTROL POINT / BENCH MARK
- DRILL HOLE
- MB — MAIL BOX
- FLAG POLE
- POST
- STUMP
- BUSH / HEDGE
- DECIDUOUS TREE
- CONIFEROUS TREE
- SIGN
- UTILITY LOCATE FLAG
- GAS LINE MARKER
- GV — GAS VALVE
- GAS METER
- GUY POLE
- POWER POLE
- LIGHT POLE
- GUY WIRE
- EM — ELECTRIC METER
- ELECTRIC PANEL
- ET — ELECTRIC TRANSFORMER
- HAND HOLE BOX
- FIBER OPTIC MARKER
- TP — TEL/TV PEDESTAL
- T — TELEPHONE MANHOLE
- TELEPHONE LINE MARKER
- TR — TRAFFIC MANHOLE
- WATER LINE MARKER
- W — WATER METER
- VALVE
- IR — IRRIGATION CONTROL VALVE
- FIRE HYDRANT
- FLUSH HYDRANT
- YARD HYDRANT
- WALL SPIGOT
- EXISTING PIPE PLUG
- STORM CATCH BASIN (SQUARE)
- STORM CATCH BASIN (ROUND)
- STORM CURB INLET
- D — STORM MANHOLE
- S — SANITARY MANHOLE
- SV — SANITARY VALVE
- CLEANOUT
- VENT
- **NEW VALVE**
- **NEW FIRE HYDRANT**
- **NEW FLUSH HYDRANT**
- **NEW WET SADDLE AND VALVE BODY**
- **NEW PLUG**
- **NEW LINE STOP**
- **NEW CUT AND CAP**
- **NEW SANITARY MH**

For Public Viewing Only-Not For Downloading

COMMONWEALTH ENGINEERS, INC.
A wealth of resources to master a common goal.
https://commonwealthengineers.com/

RUDOLPH J. NOLTICH — REGISTERED — No. PE19400077 — INDIANA PROFESSIONAL ENGINEER

Signature — 10/03/2025 Date

TOWN OF NEWBURGH
WARRICK COUNTY, INDIANA

WASTEWATER TREATMENT PLANT FLOW EQ BASIN

© 2025 BY COMMONWEALTH ENGINEERS, INC. ALL RIGHTS RESERVED. REPRODUCTION BY ANY METHOD, IN WHOLE OR IN PART WITHOUT PERMISSION IS PROHIBITED

Indiana 811 — Know what's below. 811 before you dig. 1-800-382-5544 (ITS THE LAW)

No.	Submittal / Revision	By	Date

Designed By:	Drawn By:	Checked By:
DOF	DMJ	ETP
Issue Date: 10/03/25	Project No: S18005-041	Scale: AS SHOWN

SYMBOLS, ABBREVIATIONS, AND GENERAL NOTES

Drawing No: **G04**

Sheet: 04 OF 161

File: Z:\SHARED\IN CLIENTS M-Z\NEWBURGH\S18005 ON CALL SEWER ENG SVCS\041 WWTP FLOW EQ BASIN\006 CADA CURRENT FILES\1 DRAWINGS\01-GENERAL SHEETS - NEWBUGH EQ.DWG
Saved: 10/2/2025 1:47:14 PM Plotted: 10/2/2025 1:52:08 PM Current User: Drew Jenkins LastSavedBy: djenkins

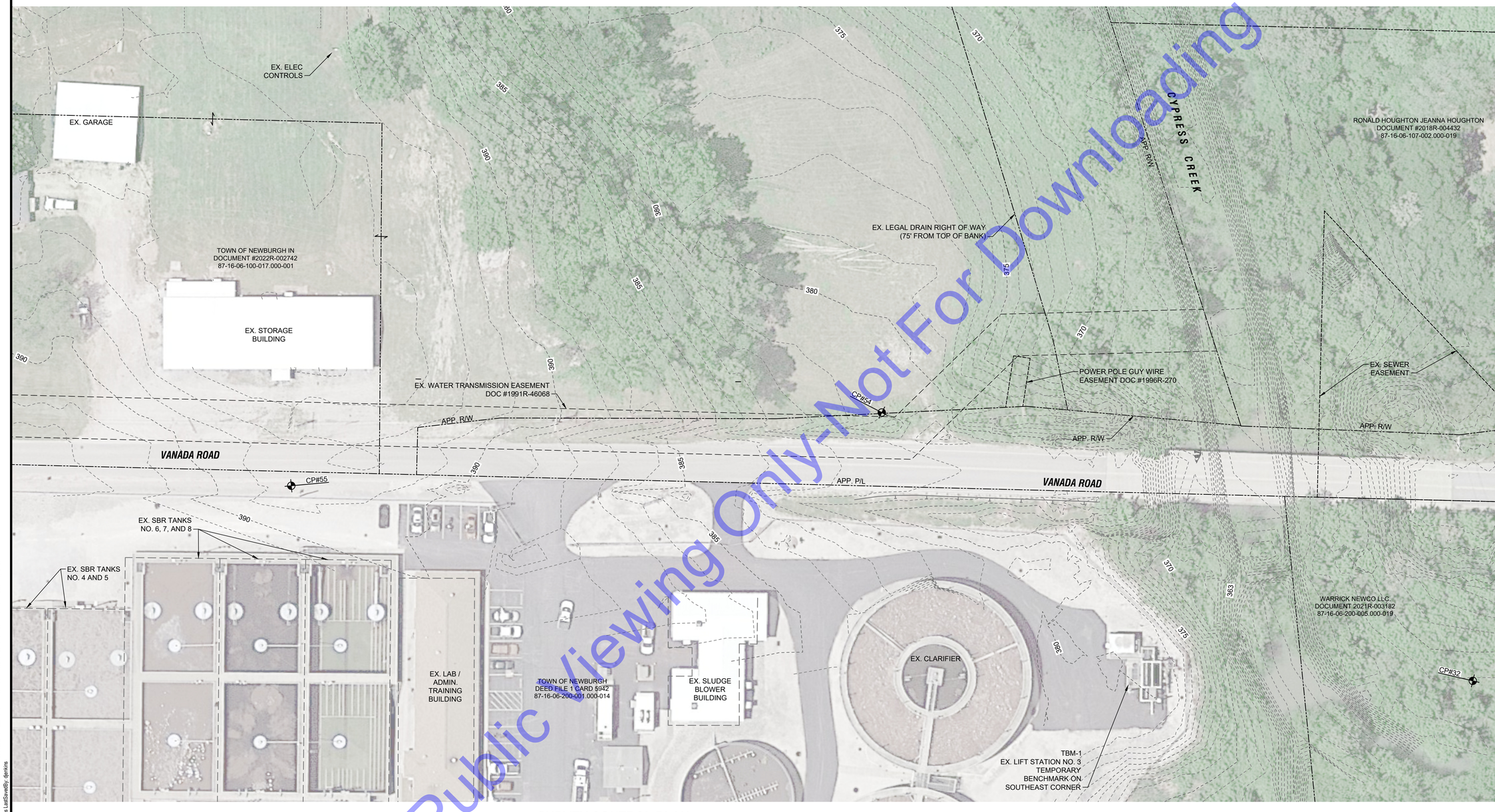

For Public Viewing Only-Not For Downloading

SURVEY CONTROL PLAN

SCALE: 1"=30'-0"

0 30' 60'

Project coordinates are based on the following:
HORIZONTAL-US State plane coordinates: NAD83 *(North American Datum)* Indiana West Zone (1302)
VERTICAL- USGS 1988 NAVD (North American Vertical Datum)-per GPS observations (Not verified by physical location of published USGS monuments)
Survey and field work completed by Hennessy Surveying, Inc.

SHEET NOTES:

1. CONTRACTOR SHALL VERIFY CONTROL POINT ELEVATIONS AGAINST A TEMPORARY BENCHMARK (TBM) PRIOR TO USE IN THE EVENT THE CONTROL POINT HAS BEEN DISTURBED SUBSEQUENT TO THE SITE SURVEY BEING COMPLETED.

CONTROL POINTS (CP)

Point #	Raw Description	Northing	Easting	Elevation
32	5/8" REBAR w/CAP	981895.16	2875995.02	369.22
54	5/8" REBAR w/CAP	981543.39	2875835.07	380.49
55	5/8" REBAR w/CAP	981191.96	2875878.67	391.42

TEMPORARY BENCHMARKS (TBM)

POINT	DESCRIPTION	ELEVATION
TBM-1	INSCRIBED 'X' ON SE CORNER OF LS NO. 3	383.32

COMMONWEALTH ENGINEERS, INC.
A wealth of resources to master a common goal.
https://commonwealthengineers.com/

RUDOLPH J. NOLTICH
REGISTERED
No. PE19400077
INDIANA
PROFESSIONAL ENGINEER

Signature 10/03/2025 Date

TOWN OF NEWBURGH
WARRICK COUNTY, INDIANA

WASTEWATER TREATMENT
PLANT FLOW EQ BASIN

© 2025 BY COMMONWEALTH ENGINEERS, INC.: ALL RIGHTS RESERVED. REPRODUCTION BY ANY METHOD, IN WHOLE OR IN PART WITHOUT PERMISSION IS PROHIBITED

Indiana 811 Know what's below. 811 before you dig. 1-800-382-5544 (ITS THE LAW)

No.	Submittal / Revision	By	Date

Designed By:	Drawn By:	Checked By:
DOF	DMJ	ETP
Issue Date: 10/03/25	Project No: S18005-041	Scale: AS SHOWN

SURVEY CONTROL PLAN

Drawing No:
G05
Sheet: 05 OF 161

File: Z:\SHARED\IN CLIENTS M-Z\NEWBURGH\S18005 ON CALL SEWER ENG SVCS\041 WWTP FLOW EQ BASIN\05 CADA CURRENT FILES\1 DRAWINGS\01-GENERAL SHEETS - NEWBUGH EQ.DWG
Saved: 10/2/2025 1:47:14 PM Plotted: 10/2/2025 1:52:27 PM Current User: Drew Jenkins LastSavedBy: djenkins

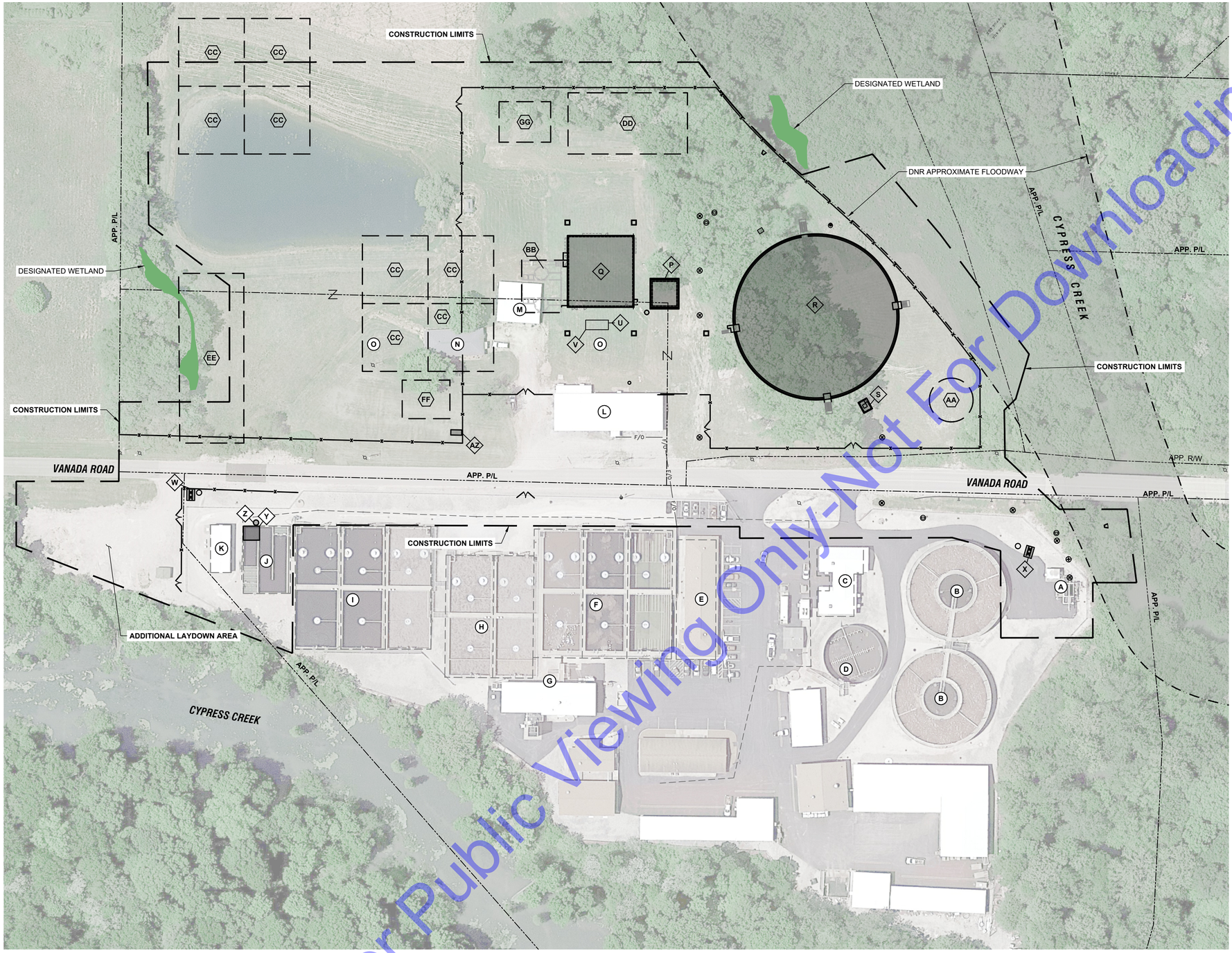

For Public Viewing Only-Not For Downloading

OVERALL FUTURE PLANT STRUCTURE LAYOUT

SCALE: 1"=60'-0"

0 60' 120'

(#)	EXISTING STRUCTURES
IDENTIFIER	DESCRIPTION
A	EX. LIFT STATION NO. 3 (PLANT INFLUENT LS)
B	EX. SLUDGE TREATMENT UNITS
C	EX. SLUDGE BLOWER BUILDING
D	EX. SLUDGE STORAGE TANK
E	EX. LAB / ADMINISTRATION TRAINING BUILDING
F	EX. SBR TANKS NO. 6, 7, AND 8
G	EX. HEADWORKS BUILDING
H	EX. SBR TANKS NO. 4 AND 5
I	EX. SBR TANKS 1, 2, AND 3
J	EX. EQUALIZATION TANK
K	EX. ULTRAVIOLET LIGHT DISINFECTION FACILITY
L	EX. STORAGE TO BE CONVERTED TO ADMINISTRATION
M	EX. STORAGE GARAGE
N	EX. HOUSE
O	EX. SEPTIC FIELD THIS AREA **(PROTECT)**

(#)	NEW STRUCTURES
IDENTIFIER	DESCRIPTION
P	**NEW HYDROGEN SULFIDE REMOVAL FACILITY**
Q	**NEW HEADWORKS**
R	**NEW FLOW EQUALIZATION TANK**
S	**NEW FLOW CONTROL VAULT**
U	**NEW GENERATOR PAD**
V	**PROPOSED LOCATION TO PROVIDE POWER ON SITE**
W	**NEW LS NO. 2 FM FLOW CONTROL STRUCTURE**
X	**NEW LS NO. 3 FM FLOW CONTROL STRUCTURE**
Y	**NEW NON-POTABLE WATER PLATFORM**
Z	**NEW NON-POTABLE WATER VALVE VAULT**
AZ	**NEW POTABLE WATER VALVE VAULT**

(#)	FUTURE STRUCTURES*
IDENTIFIER	DESCRIPTION
AA	FUTURE LIFT STATION NO. 3 (PLANT INFLUENT LS)
BB	FUTURE GRIT BUILDING
CC	FUTURE SBR TANK
DD	FUTURE SLUDGE HANDLING AND PRESS
EE	FUTURE POST EQ AND UV FACILITY
FF	FUTURE WWTP CONTROL BUILDING
GG	FUTURE DUMPSTER AREA

* FUTURE STRUCTURES TO BE INSTALLED "BY OTHERS" IN FUTURE PHASES.

COMMONWEALTH ENGINEERS, INC.
A wealth of resources to master a common goal.
https://commonwealthengineers.com/

RUDOLPH J. NOVITCH
REGISTERED
No. PE19400077
INDIANA
PROFESSIONAL ENGINEER
Signature 10/03/2025 Date

TOWN OF NEWBURGH
WARRICK COUNTY, INDIANA

WASTEWATER TREATMENT
PLANT FLOW EQ BASIN

© 2026 BY COMMONWEALTH ENGINEERS, INC. ALL RIGHTS RESERVED. REPRODUCTION IN ANY MEDIUM, IN WHOLE OR IN PART WITHOUT PERMISSION IS PROHIBITED

Indiana 811 Know what's below. 811 before you dig. 1-800-382-5544 (ITS THE LAW)

No.	Submittal / Revision	By	Date

Designed By:	Drawn By:	Checked By:
DOF	DMJ	ETP
Issue Date:	Project No:	Scale:
10/03/25	S18005-041	AS SHOWN

OVERALL WORK PLAN AND FUTURE PLANT STRUCTURE

Drawing No:
G06
Sheet: 06 OF 161

File: Z:\SHARED\IN CLIENTS M-Z\NEWBURGH\S18005 ON CALL SEWER ENG SVCS\041 WWTP FLOW EQ BASIN\06 CADA CURRENT FILES\1 DRAWINGS\01-GENERAL SHEETS - NEWBUGH EQ.DWG
Saved: 10/2/2025 1:47:14 PM Plotted: 10/2/2025 1:52:36 PM Current User: Drew Jenkins LastSavedBy: djenkins

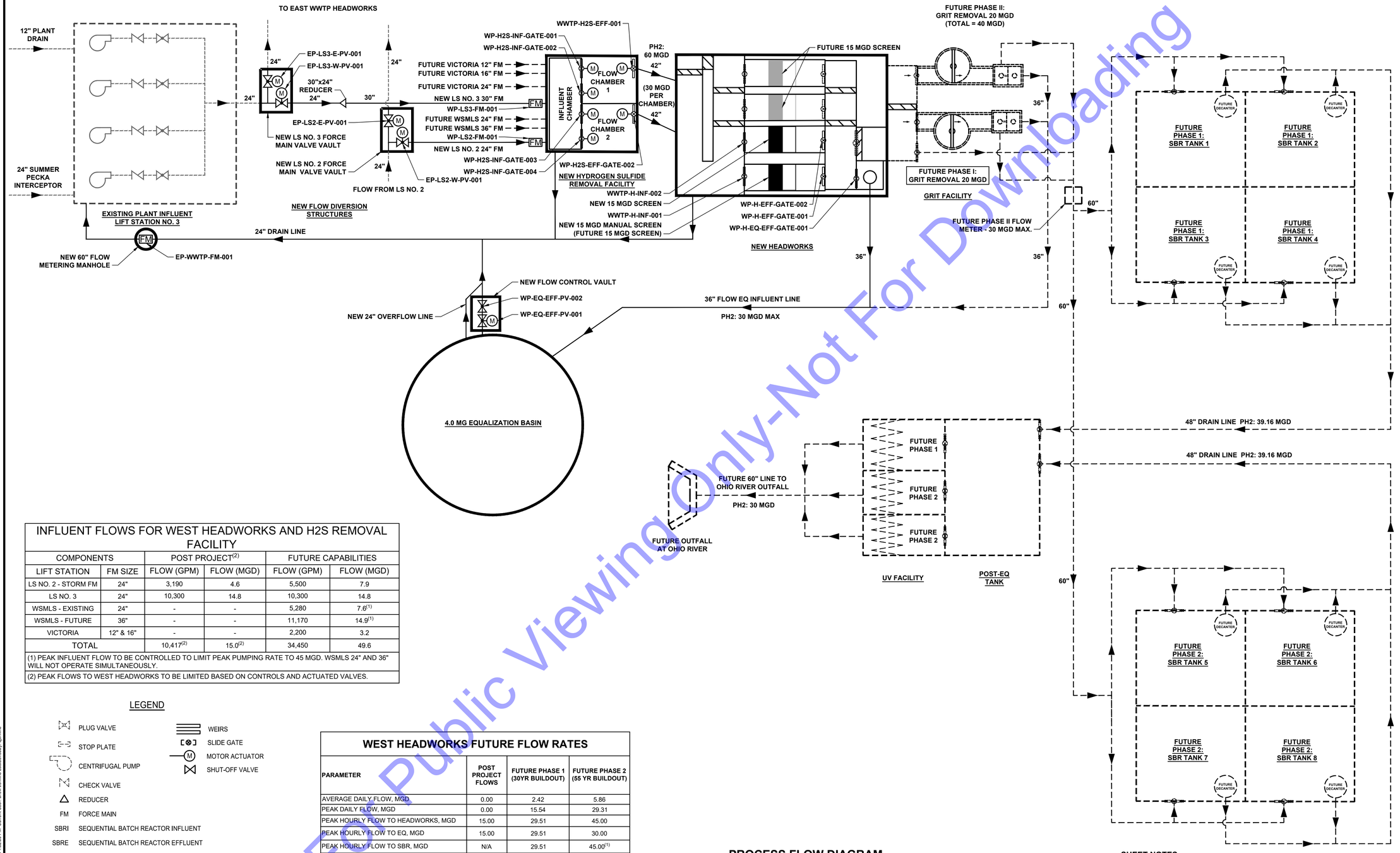

INFLUENT FLOWS FOR WEST HEADWORKS AND H2S REMOVAL FACILITY					
COMPONENTS		POST PROJECT(2)		FUTURE CAPABILITIES	
LIFT STATION	FM SIZE	FLOW (GPM)	FLOW (MGD)	FLOW (GPM)	FLOW (MGD)
LS NO. 2 - STORM FM	24"	3,190	4.6	5,500	7.9
LS NO. 3	24"	10,300	14.8	10,300	14.8
WSMLS - EXISTING	24"	-	-	5,280	7.6(1)
WSMLS - FUTURE	36"	-	-	11,170	14.9(1)
VICTORIA	12" & 16"	-	-	2,200	3.2
TOTAL		10,417(2)	15.0(2)	34,450	49.6
(1) PEAK INFLUENT FLOW TO BE CONTROLLED TO LIMIT PEAK PUMPING RATE TO 45 MGD. WSMLS 24" AND 36" WILL NOT OPERATE SIMULTANEOUSLY.					
(2) PEAK FLOWS TO WEST HEADWORKS TO BE LIMITED BASED ON CONTROLS AND ACTUATED VALVES.					

LEGEND

- PLUG VALVE
- STOP PLATE
- CENTRIFUGAL PUMP
- CHECK VALVE
- REDUCER
- FM FORCE MAIN
- SBRI SEQUENTIAL BATCH REACTOR INFLUENT
- SBRE SEQUENTIAL BATCH REACTOR EFFLUENT
- UVI ULTRAVIOLET INFLUENT
- PO PLANT OUTFALL
- FLOW
- EXISTING STRUCTURE
- NEW PROJECT
- FUTURE PROJECT
- WEIRS
- SLIDE GATE
- MOTOR ACTUATOR
- SHUT-OFF VALVE

WEST HEADWORKS FUTURE FLOW RATES			
PARAMETER	POST PROJECT FLOWS	FUTURE PHASE 1 (30YR BUILDOUT)	FUTURE PHASE 2 (55 YR BUILDOUT)
AVERAGE DAILY FLOW, MGD	0.00	2.42	5.86
PEAK DAILY FLOW, MGD	0.00	15.54	29.31
PEAK HOURLY FLOW TO HEADWORKS, MGD	15.00	29.51	45.00
PEAK HOURLY FLOW TO EQ, MGD	15.00	29.51	30.00
PEAK HOURLY FLOW TO SBR, MGD	N/A	29.51	45.00(1)
PEAK DECANT FLOW, MGD	N/A	19.58	39.16
(1) - PEAK FLOWS IN EXCESS OF THE FUTURE SBR CAPACITY WILL BE ROUTED TO THE EQ. THESE FLOWS ARE NOT TO EXCEED 30 MGD BASED ON FUTURE SBR CAPACITY.			

PROCESS FLOW DIAGRAM

NOT TO SCALE

SHEET NOTES:

1. ONLY IMPROVEMENTS DESIGNATED AS "NEW" ARE INCLUDED IN THIS SCOPE OF WORK. ALL IMPROVEMENTS DESIGNATED AS "FUTURE" ARE SHOWN FOR CONTEXTUAL PURPOSES ONLY.
2. FUTURE IMPROVEMENTS WILL BE MADE IN TWO PARTS AS REQUIRED BY FUTURE FLOWS EXPERIENCED.

For Public Viewing Only-Not For Downloading

COMMONWEALTH ENGINEERS, INC.
A wealth of resources to master a common goal.
https://commonwealthengineers.com/

RUDOLPH J. NOLLICH
REGISTERED
No. PE19400077
INDIANA
PROFESSIONAL ENGINEER
Signature 10/03/2025 Date

TOWN OF NEWBURGH
WARRICK COUNTY, INDIANA

WASTEWATER TREATMENT
PLANT FLOW EQ BASIN

© 2025 BY COMMONWEALTH ENGINEERS, INC. ALL RIGHTS RESERVED. REPRODUCTION IN ANY FORM, IN WHOLE OR IN PART WITHOUT PERMISSION IS PROHIBITED

Indiana 811 Know what's below. 811 before you dig. 1-800-382-5544 (ITS THE LAW)

No.	Submittal / Revision	By	Date

Designed By:	Drawn By:	Checked By:
DOF	DMJ	ETP
Issue Date:	Project No:	Scale:
10/03/25	S18005-041	AS SHOWN

PROCESS FLOW DIAGRAM

Drawing No:
G07
Sheet: 07 OF 161

File: Z:\SHARED\IN CLIENTS M-Z\NEWBURGH\S18005 ON CALL SEWER ENG SVC\2041 WWTP FLOW EQ BASIN\05 CADA CURRENT FILES\1 DRAWINGS\01-GENERAL SHEETS - NEWBUGH EQ.DWG
Saved: 10/2/2025 1:47:14 PM Plotted: 10/2/2025 1:52:38 PM Current User: Drew.Jenkins LastSavedBy: djenkins

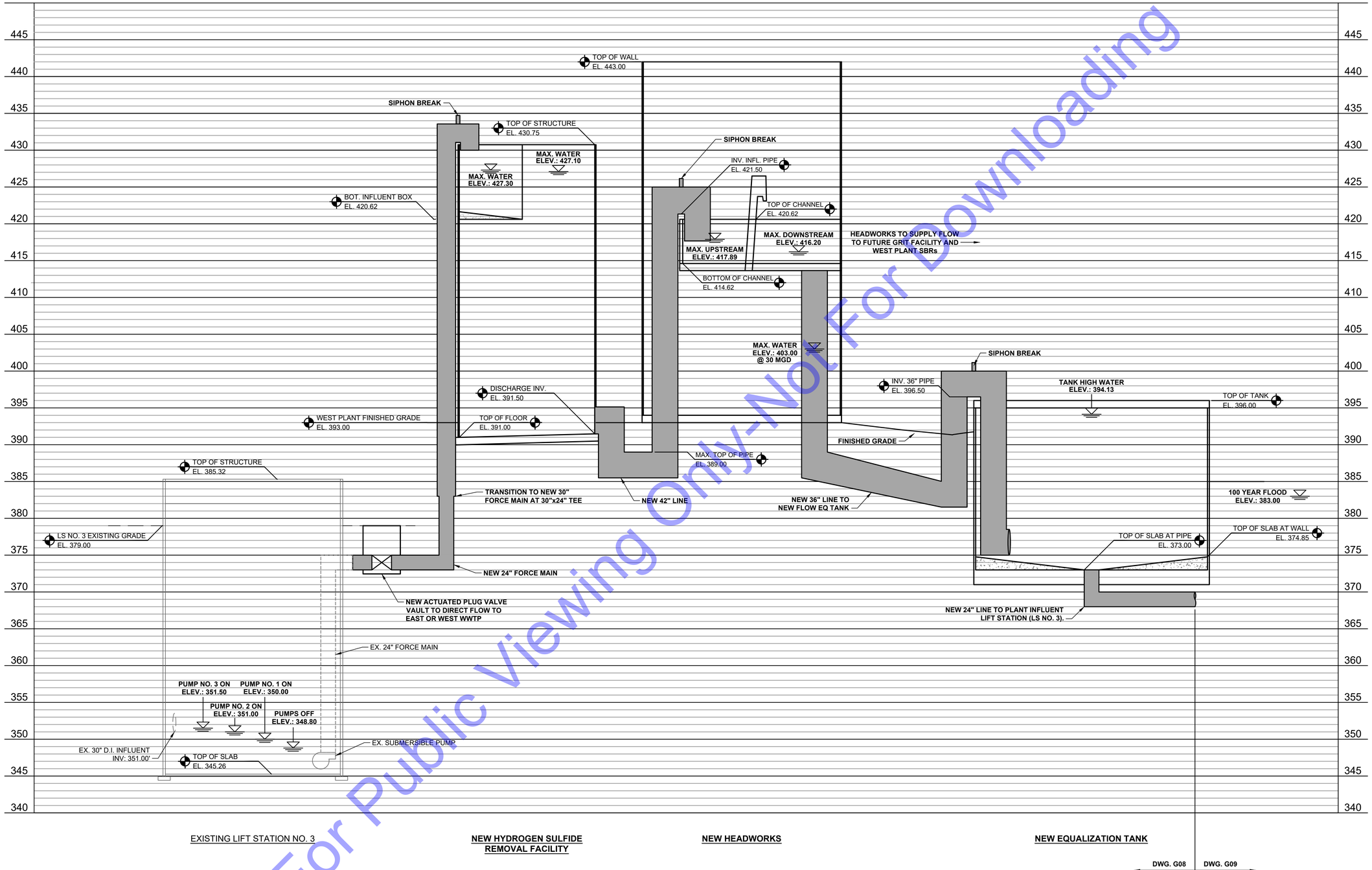

For Public Viewing Only-Not For Downloading

HYDRAULIC PROFILE -
EXISTING LIFT STATION NO. 3 TO EQ BASIN

NOT TO SCALE

COMMONWEALTH ENGINEERS, INC.
A wealth of resources to master a common goal.
https://commonwealthengineers.com/

RUDOLPH J. NOTTICH
REGISTERED
No. PE19400077
INDIANA
PROFESSIONAL ENGINEER

Signature 10/03/2025 Date

TOWN OF NEWBURGH
WARRICK COUNTY, INDIANA

WASTEWATER TREATMENT
PLANT FLOW EQ BASIN

© 2025 BY COMMONWEALTH ENGINEERS, INC. ALL RIGHTS RESERVED. REPRODUCTION BY ANY METHOD WHOLE OR IN PART WITHOUT PERMISSION IS PROHIBITED

Know what's below. 811 before you dig.
1-800-382-5544
(ITS THE LAW)

No.	Submittal / Revision	By	Date

Designed By:	Drawn By:	Checked By:
DOF	DMJ	ETP
Issue Date:	Project No:	Scale:
10/03/25	S18005-041	AS SHOWN

HYDRAULIC PROFILE - EX. LS NO. 3 TO EQ BASIN

Drawing No:
G08
Sheet: 08 OF 161

File: Z:\SHARED\IN CLIENTS M-Z\NEWBURGH\S18005 GN CALL SEWER ENG SVCS\041 WWTP FLOW EQ BASIN\06 CADA CURRENT FILES\1 DRAWINGS\01-GENERAL SHEETS - NEWBUGH EQ.DWG
Saved: 10/2/2025 1:47:14 PM Plotted: 10/2/2025 1:52:44 PM Current User: Drew Jenkins LastSavedBy: djenkins

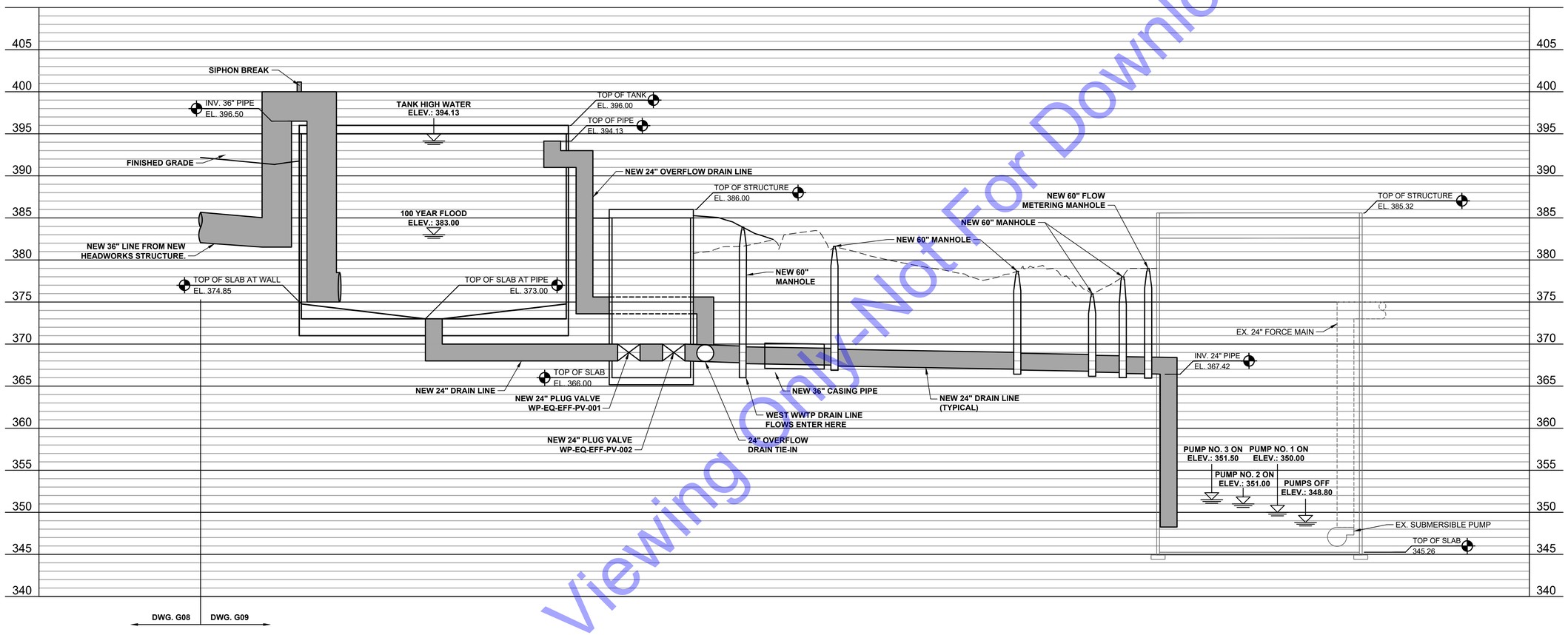

For Public Viewing Only-Not For Downloading

HYDRAULIC PROFILE -
EQ TANK TO EXISTING LIFT STATION NO. 3

NOT TO SCALE

COMMONWEALTH ENGINEERS, INC.
A wealth of resources to master a common goal.
https://commonwealthengineers.com/

RUDOLPH J NOLTICH
REGISTERED
No. PE19400077
INDIANA
PROFESSIONAL ENGINEER

Signature 10/03/2025 Date

TOWN OF NEWBURGH
WARRICK COUNTY, INDIANA

WASTEWATER TREATMENT
PLANT FLOW EQ BASIN

© 2025 BY COMMONWEALTH ENGINEERS, INC. ALL RIGHTS RESERVED. REPRODUCTION BY ANY METHOD, IN WHOLE OR IN PART WITHOUT PERMISSION IS PROHIBITED

Know what's below. 811 before you dig.
1-800-382-5544
(ITS THE LAW)

No.	Submittal / Revision	By	Date

Designed By:	Drawn By:	Checked By:
DOF	DMJ	ETP
Issue Date:	Project No:	Scale:
10/03/25	S18005-041	AS SHOWN

HYDRAULIC PROFILE
- EQ BASIN TO EX.
LS NO. 3

Drawing No:
G09
Sheet: 09 OF 161

File: Z:\SHARED\IN CLIENTS M-Z\NEWBURGH\S18005 GN CALL SEWER ENG SVCS\041 WWTP FLOW EQ BASIN\06 CADA CURRENT FILES\1 DRAWINGS\01-GENERAL SHEETS - NEWBUGH EQ.DWG
Saved: 10/2/2025 1:47:14 PM Plotted: 10/2/2025 1:52:52 PM Current User: Drew Jenkins LastSavedBy: djenkins

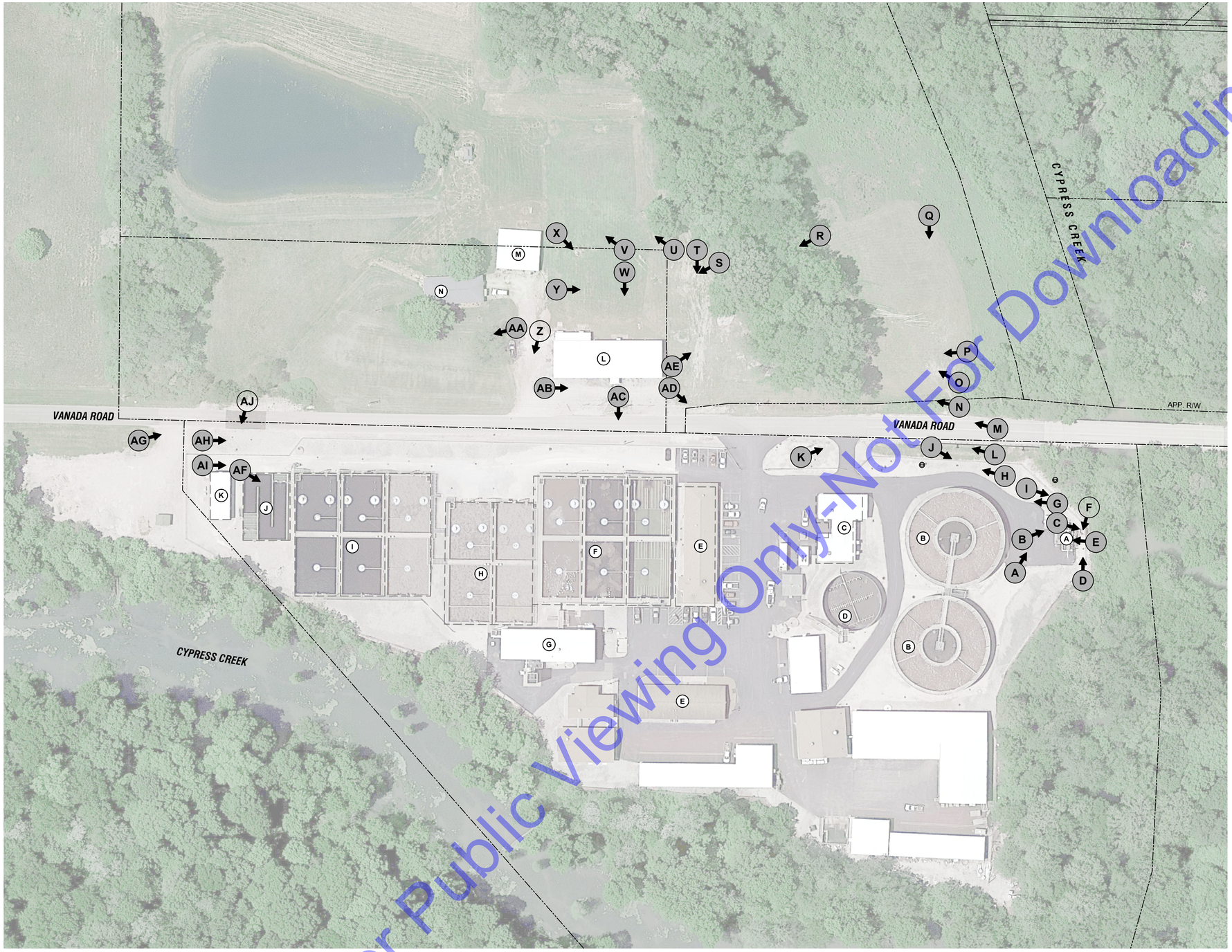

PHOTO LOG PLAN

SCALE: 1"=60'-0"

0 60' 120'

EXISTING STRUCTURES	
IDENTIFIER	DESCRIPTION
A	EX. LIFT STATION NO. 3 (PLANT INFLUENT LS)
B	EX. SLUDGE TREATMENT UNITS
C	EX. SLUDGE BLOWER BUILDING
D	EX. SLUDGE STORAGE TANK
E	EX. LAB / ADMINISTRATION TRAINING BUILDING
F	EX. SBR TANKS NO. 6, 7, AND 8
G	EX. HEADWORKS BUILDING
H	EX. SBR TANKS NO. 4 AND 5
I	EX. SBR TANKS 1, 2, AND 3
J	EX. EQUALIZATION TANK
K	EX. ULTRAVIOLET LIGHT DISINFECTION FACILITY
L	EX. STORAGE TO BE CONVERTED TO ADMINISTRATION
M	EX. STORAGE GARAGE
N	EX. HOUSE

LEGEND:

(#) INDICATES PHOTO NUMBER AND DIRECTION (PHOTOS TAKEN BY COMMONWEALTH ENGINEERS, INC. ON 06/11/25)

SHEET NOTES:

1. SEE SHEETS G11 AND G12 FOR PHOTOS REFERENCED IN THIS PLAN

For Public Viewing Only-Not For Downloading

COMMONWEALTH ENGINEERS, INC.
A wealth of resources to master a common goal.
https://commonwealthengineers.com/

RUDOLPH J. NOVITCH
REGISTERED
No. PE19400077
INDIANA
PROFESSIONAL ENGINEER

Signature 10/03/2025 Date

TOWN OF NEWBURGH
WARRICK COUNTY, INDIANA

WASTEWATER TREATMENT
PLANT FLOW EQ BASIN

© 2025 BY COMMONWEALTH ENGINEERS, INC. ALL RIGHTS RESERVED. REPRODUCTION BY ANY METHOD, IN WHOLE OR IN PART WITHOUT PERMISSION IS PROHIBITED

Indiana 811 Know what's below. 811 before you dig. 1-800-382-5544 (ITS THE LAW)

No.	Submittal / Revision	By	Date

Designed By:	Drawn By:	Checked By:
DOF	DMJ	ETP
Issue Date:	Project No:	Scale:
10/03/25	S18005-041	AS SHOWN

PHOTO LOG PLAN

Drawing No:
G10
Sheet: 10 OF 161

File: Z:\SHARED\IN CLIENTS M-Z\NEWBURGH\S18005 ON CALL SEWER ENG SVCS\041 WWTP FLOW EQ BASIN\06 CADA CURRENT FILES\1 DRAWINGS\01-GENERAL SHEETS - NEWBURGH EQ.DWG
Saved: 10/2/2025 1:47:14 PM Plotted: 10/2/2025 1:53:01 PM Current User: Drew Jenkins LastSavedBy: djenkins

EX. LIFT STATION ENTRANCE
(LOOKING NORTHWEST)

PHOTO A

NOT TO SCALE

EX. LIFT STATION
(LOOKING NORTHWEST)

PHOTO B

NOT TO SCALE

INSIDE LIFT STATION
(LOOKING NORTH)

PHOTO C

NOT TO SCALE

EX. LIFT STATION
(LOOKING WEST)

PHOTO D

NOT TO SCALE

EX. LIFT STATION
(LOOKING SOUTH)

PHOTO E

NOT TO SCALE

EX. LIFT STATION
(LOOKING SOUTHEAST)

PHOTO F

NOT TO SCALE

EX. GRAVEL DRIVE
(LOOKING SOUTHWEST)

PHOTO G

NOT TO SCALE

EX. ASPHALT DRIVE AND SLUDGE
TREATMENT TANKS
(LOOKING SOUTH)

PHOTO H

NOT TO SCALE

EX. GRAVEL DRIVE
(LOOKING NORTHEAST)

PHOTO I

NOT TO SCALE

EX. DITCH
(LOOKING NORTHEAST)

PHOTO J

NOT TO SCALE

EX. ASPHALT ENTRANCE
(LOOKING NORTHWEST)

PHOTO K

NOT TO SCALE

EX. DITCH
(LOOKING SOUTHWEST)

PHOTO L

NOT TO SCALE

VANADA ROAD
(LOOKING SOUTH)

PHOTO M

NOT TO SCALE

EX. DITCH
(LOOKING SOUTH)

PHOTO N

NOT TO SCALE

EX. FIELD
(LOOKING SOUTHWEST)

PHOTO O

NOT TO SCALE

EX. FIELD
(LOOKING SOUTH)

PHOTO P

NOT TO SCALE

EX. FIELD
(LOOKING EAST)

PHOTO Q

NOT TO SCALE

EX. TREE LINE
(LOOKING SOUTH)

PHOTO R

NOT TO SCALE

For Public Viewing Only-Not For Downloading

COMMONWEALTH ENGINEERS, INC.
A wealth of resources to master a common goal.
https://commonwealthengineers.com/

RUDOLPH J. NOVITCH
REGISTERED
No. PE19400077
INDIANA
PROFESSIONAL ENGINEER

Signature 10/03/2025 Date

TOWN OF NEWBURGH
WARRICK COUNTY, INDIANA

WASTEWATER TREATMENT
PLANT FLOW EQ BASIN

© 2025 BY COMMONWEALTH ENGINEERS, INC. ALL RIGHTS RESERVED. REPRODUCTION BY ANY METHOD WHOLE OR IN PART WITHOUT PERMISSION IS PROHIBITED

Know what's below. 811 before you dig.
1-800-382-5544
(ITS THE LAW)

No.	Submittal / Revision	By	Date

Designed By:	Drawn By:	Checked By:
DOF	DMJ	ETP
Issue Date:	Project No:	Scale:
10/03/25	S18005-041	AS SHOWN

PHOTO LOG

Drawing No:
G11
Sheet: 11 OF 161

File: Z:\SHARED\IN CLIENTS M-Z\NEWBURGH\S18005 ON CALL SEWER ENG SVCS\041 WWTP FLOW EQ BASIN\06 CADA CURRENT FILES\1 DRAWINGS\01-GENERAL SHEETS - NEWBUGH EQ.DWG
Saved: 10/2/2025 1:47:14 PM Plotted: 10/2/2025 1:53:09 PM Current User: Drew Jenkins LastSavedBy: djenkins

EX. FIELD
(LOOKING SOUTH)
PHOTO
NOT TO SCALE
S

EX. FIELD
(LOOKING EAST)
PHOTO
NOT TO SCALE
T

EX. FIELD
(LOOKING SOUTHWEST)
PHOTO
NOT TO SCALE
U

EX. FIELD
(LOOKING SOUTHWEST)
PHOTO
NOT TO SCALE
V

EX. FIELD
(LOOKING EAST)
PHOTO
NOT TO SCALE
W

EX. FIELD
(LOOKING NORTHEAST)
PHOTO
NOT TO SCALE
X

EX. FIELD
(LOOKING NORTH)
PHOTO
NOT TO SCALE
Y

EX. GRAVEL ENTRANCE
(LOOKING SOUTHEAST)
PHOTO
NOT TO SCALE
Z

EX. GRAVEL ENTRANCE
(LOOKING SOUTH)
PHOTO
NOT TO SCALE
AA

EX. STORAGE LOT
(LOOKING NORTH)
PHOTO
NOT TO SCALE
AB

EX. STORAGE LOT
(LOOKING EAST)
PHOTO
NOT TO SCALE
AC

EX. STORAGE LOT
(LOOKING NORTHEAST)
PHOTO
NOT TO SCALE
AD

EX. FIELD
(LOOKING NORTHWEST)
PHOTO
NOT TO SCALE
AE

EX. EQUALIZATION TANK
(LOOKING NORTHEAST)
PHOTO
NOT TO SCALE
AF

EX. GRAVEL ENTRANCE
(LOOKING NORTH)
PHOTO
NOT TO SCALE
AG

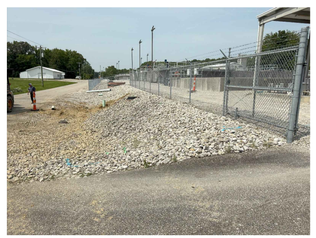

EX. GRAVEL DITCH
(LOOKING NORTH)
PHOTO
NOT TO SCALE
AH

EX. UV LIGHT DISINFECTION FACILITY
(LOOKING NORTH)
PHOTO
NOT TO SCALE
AI

EX. UV LIGHT DISINFECTION FACILITY
(LOOKING EAST)
PHOTO
NOT TO SCALE
AJ

For Public Viewing Only-Not For Downloading

COMMONWEALTH ENGINEERS, INC.
A wealth of resources to master a common goal.
https://commonwealthengineers.com/

RUDOLPH J. NOLTICH
REGISTERED
No. PE19400077
INDIANA
PROFESSIONAL ENGINEER

Signature 10/03/2025 Date

TOWN OF NEWBURGH
WARRICK COUNTY, INDIANA

WASTEWATER TREATMENT
PLANT FLOW EQ BASIN

© 2025 BY COMMONWEALTH ENGINEERS, INC. ALL RIGHTS RESERVED. REPRODUCTION BY ANY METHOD, IN WHOLE OR IN PART WITHOUT PERMISSION IS PROHIBITED

Know what's below. 811 before you dig.
1-800-382-5544
(ITS THE LAW)

No.	Submittal / Revision	By	Date

Designed By:	Drawn By:	Checked By:
DOF	DMJ	ETP
Issue Date:	Project No:	Scale:
10/03/25	S18005-041	AS SHOWN

PHOTO LOG

Drawing No:
G12
Sheet: 12 OF 161

File: Z:\SHARED\IN CLIENTS M-Z\NEWBURGH\S18005 ON CALL SEWER ENG SVCS\041 WWTP FLOW EQ BASIN\06 CADA CURRENT FILES\1 DRAWINGS\G01-GENERAL SHEETS - NEWBUGH EQ.DWG
Saved: 10/2/2025 1:47:14 PM Plotted: 10/2/2025 1:53:19 PM Current User: Drew Jenkins LastSavedBy: djenkins

(#)	EXISTING STRUCTURES
IDENTIFIER	DESCRIPTION
A	EX. LIFT STATION NO. 3 (PLANT INFLUENT LS)
B	EX. SLUDGE TREATMENT UNITS
C	EX. SLUDGE BLOWER BUILDING
D	EX. SLUDGE STORAGE TANK
E	EX. LAB / ADMINISTRATION TRAINING BUILDING
F	EX. SBR TANKS NO. 6, 7, AND 8
G	EX. HEADWORKS BUILDING
H	EX. SBR TANKS NO. 4 AND 5
I	EX. SBR TANKS 1, 2, AND 3
J	EX. EQUALIZATION TANK
K	EX. ULTRAVIOLET LIGHT DISINFECTION FACILITY
L	EX. STORAGE TO BE CONVERTED TO ADMINISTRATION
M	EX. STORAGE GARAGE
N	EX. HOUSE
O	APPROX. EX. SEPTIC FIELD

CONSTRUCTION LIMITS

DO NOT DISTURB DESIGNATED WETLANDS

PROTECT EX. TREES WITHIN FLOODWAY TO REMAIN (TYP.)

CONSTRUCTION LIMITS

APP. P/L

CLEAR EXISTING VEGETATION, INCLUDING ANY GRUBBING OR TREE REMOVAL REQUIRED.

APPROX. EX. POND **TO BE FILLED IN (SEE SHEET C-01)**

TOWN OF NEWBURGH IN DOCUMENT #2022R-002742 87-16-06-100-016.000-001

RELOCATE AND RETIRE (SEE GENERAL NOTE 2) EX. ELEC CONTROLS

DO NOT DISTURB DESIGNATED WETLANDS

CONSTRUCTION LIMITS

PROTECT APPROX. EX. SEPTIC SYSTEM LIMITS (O)

APPROX. EX. SEPTIC SYSTEM LIMITS **(PROTECT AS REQUIRED AND REMOVE AFTER LATERAL CONNECTION IS MADE)** (O)

TOWN OF NEWBURGH IN DOCUMENT #2022R-002742 87-16-06-100-017.000-001

CLEAR EXISTING VEGETATION, INCLUDING ANY GRUBBING OR TREE REMOVAL REQUIRED FOR PIPE INSTALLATION.

PROTECT EX. WATER LINE BETWEEN BUILDING N AND L

REMOVE EX. 24" FORCE MAIN FOR NEW CONNECTION AS REQUIRED

SSMH RIM = 386.51' 48" D.I. (E) = NA' 48" D.I. (W)= 375.81' 48" D.I. (S) = 375.76'

DOCUMENT 1991R-46068 ION LINE EASEMENT

SSMH RIM = 388.04' 48" D.I. (S) = 379.14'

25' WATER LINE ESMT DOC 1991R-46068

EX. FENCE (**REMOVE AND RESET AS REQUIRED FOR SEWER INSTALLATION**)

VANADA ROAD

APP. P/L

APP. R/W

CLEAR EXISTING VEGETATION INCLUDING ANY GRUBBING OR TREE REMOVAL AS REQUIRED FOR STORM OUTLET INSTALLATION

REPLACE INLET AS REQUIRED

SSMH (REPLACE) RIM = 387.72' 6" D.I. (E) = 375.37' 12" D.I. (S) = 373.37' 12" D.I. (W) = 373.32'

SSMH (REPLACE) RIM = 394.25' 12" D.I. (S) = 369.89' 12" D.I. (E) = 369.59'

10" D.I. STUB

RIM=384.62' 5"CPP(N)=372.77' 18"PVC(E)=372.77'

AD RIM=384.66' 15"CPP(W)=373.91' 18"PVC(S)=373.91'

CONSTRUCTION LIMITS

REMOVE AND RESET EXISTING FENCE AS INDICATED

TOWN OF NEWBURGH DEED FILE 1 CARD 5942 87-16-06-200-001.000-014

REMOVE AND REUSE EXISTING FENCE TO INSTALL FENCE IN ALL AREAS AS INDICATED

EX. LIFT STATION NO. 2 24" FORCE MAIN

EX. SBR TANKS NO. 4 AND 5

EX. SBR TANKS NO. 6, 7, AND 8

SV-RIM = 388.87' T/VALVE = 386.00' SV-RIM = 388.64' T/VALVE = 385.95' SV-RIM = 388.60' T/VALVE = 385.94'

SSMH RIM = 388.81' 8" PVC IE) = 376.93' 12" D.I. (S) = 373.93' 12" D.I. (N) = 373.73'

SSMH RIM = 383.58' 12" D.I. (S) = 373.73' 12" D.I. (N) = 373.65'

SSMH RIM = 384.49' BOT. PIT = 372.89' 12" D.I. (S) = 373.54' 12" D.I. (N)= 373.49'

SV-RIM = 384.04' T/VALVE = 381.75' SV-RIM = 383.90' T/VALVE = 381.73'

TOWN OF NEWBURGH DEED FILE 1 CARD 5942 87-16-06-200-001.000-014

EX. LIFT STATION NO. 3 24" FORCE MAIN

AD RIM=383.03' 12"PVC(E)=376.28' 18"PVC(S)=375.83' 18"PVC(N)=375.73'

SV-RIM = 384.09' T/VALVE = 380.24'

SSMH RIM = 381.36' 12" D.I. (S) = 373.36' 12" PVC (N) = 373.26' UP AND DOWNSTREAM UNKNOWN

REMOVE EX. 12" D.I. GRAVITY SEWER AS REQUIRED

SV-RIM = 379.75' T/VALVE = 377.31'

SSMH RIM = 379.60'

SSMH RIM = 379.42' 12" D.I. (W) = 369.02' 12" D.I. (E) = 368.12' 12" D.I. (S) = 368.07'

18"PVC INV=367.69'

EX. 18" STORM PIPE **RETIRE WITH CELLULAR FOAM**

REMOVE EX. 24" FORCE MAIN FOR NEW CONNECTION AS REQUIRED

PI-12"RCP INV=387.19'

PI-12"RCP INV=385.86'

PI-12"CMP INV=382.35'

PI-12"CMP INV=381.05'

PI-15"CMP INV=377.30'

PROTECT EX. WATER LINE BETWEEN BUILDING M AND L

CO

F/O

GENERAL NOTES

1. CONTRACTOR TO VERIFY AND MARK EXTENTS OF EXISTING SEPTIC SYSTEMS PRIOR TO CONSTRUCTION SO AS TO PROTECT THE SITE.
2. EX. ELECTRICAL CONTROL NOTED ON PLANS SUPPLIES POWER FOR BUILDING M AND BUILDING L. CONTRACTOR SHALL RELOCATE CONTROLS AND INCOMING POWER TO LOCATION NEAR BUILDING L; THE EXACT LOCATION IS SUBJECT TO OWNER APPROVAL.
3. CONTRACTOR SHALL REMOVE EXISTING CONCRETE PANELS BEHIND BUILDING L. SEE HISTORIC AERIAL PHOTOGRAPHY TO RIGHT.
4. COORDINATE WITH LEROY GOLDSBERRY FOR ALL ITEMS TO BE SALVAGED.

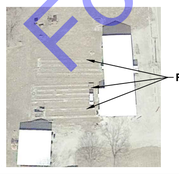

REMOVE EX. CONCRETE PANELS

SITE DEMOLITION PLAN

SCALE: 1"=40'-0"

0 40' 80'

For Public Viewing Only-Not For Downloading

COMMONWEALTH ENGINEERS, INC.
A wealth of resources to master a common goal.
https://commonwealthengineers.com/

RUDOLPH J NOVLICH REGISTERED No. PE19400077 INDIANA PROFESSIONAL ENGINEER

Signature 10/03/2025 Date

TOWN OF NEWBURGH
WARRICK COUNTY, INDIANA

WASTEWATER TREATMENT PLANT FLOW EQ BASIN

© 2025 BY COMMONWEALTH ENGINEERS, INC. ALL RIGHTS RESERVED. REPRODUCTION OR USE OF THIS PLAN IN WHOLE OR IN PART WITHOUT PERMISSION IS PROHIBITED

Know what's below. 811 before you dig. 1-800-382-5544 (ITS THE LAW)

No.	Submittal / Revision	By	Date

Designed By:	Drawn By:	Checked By:
DOF	DMJ	ETP
Issue Date: 10/03/25	Project No: S18005-041	Scale: AS SHOWN

SITE DEMOLITION PLAN

Drawing No: **CD-01**

Sheet: 13 OF 161

File: Z:\SHARED\IN CLIENTS M-Z\NEWBURGH\S18005 ON CALL SEWER ENG SVCS\041 WWTP FLOW EQ BASIN\05 CADA CURRENT FILES\1 DRAWINGS\05-EX SITE PLANS.DWG
Saved: 10/2/2025 1:44:26 PM Plotted: 10/2/2025 1:33:50 PM Current User: Drew Jenkins LastSavedBy: djenkins

(#)	EXISTING STRUCTURES
IDENTIFIER	DESCRIPTION
A	EX. LIFT STATION NO. 3 (PLANT INFLUENT LS)
B	EX. SLUDGE TREATMENT UNITS
C	EX. SLUDGE BLOWER BUILDING
D	EX. SLUDGE STORAGE TANK
E	EX. LAB / ADMINISTRATION TRAINING BUILDING
F	EX. SBR TANKS NO. 6, 7, AND 8
G	EX. HEADWORKS BUILDING
H	EX. SBR TANKS NO. 4 AND 5
I	EX. SBR TANKS 1, 2, AND 3
J	EX. EQUALIZATION TANK
K	EX. ULTRAVIOLET LIGHT DISINFECTION FACILITY
L	EX. STORAGE TO BE CONVERTED TO ADMINISTRATION
M	EX. STORAGE GARAGE
N	EX. HOUSE
O	EX. SEPTIC FIELD THIS AREA TO REMAIN

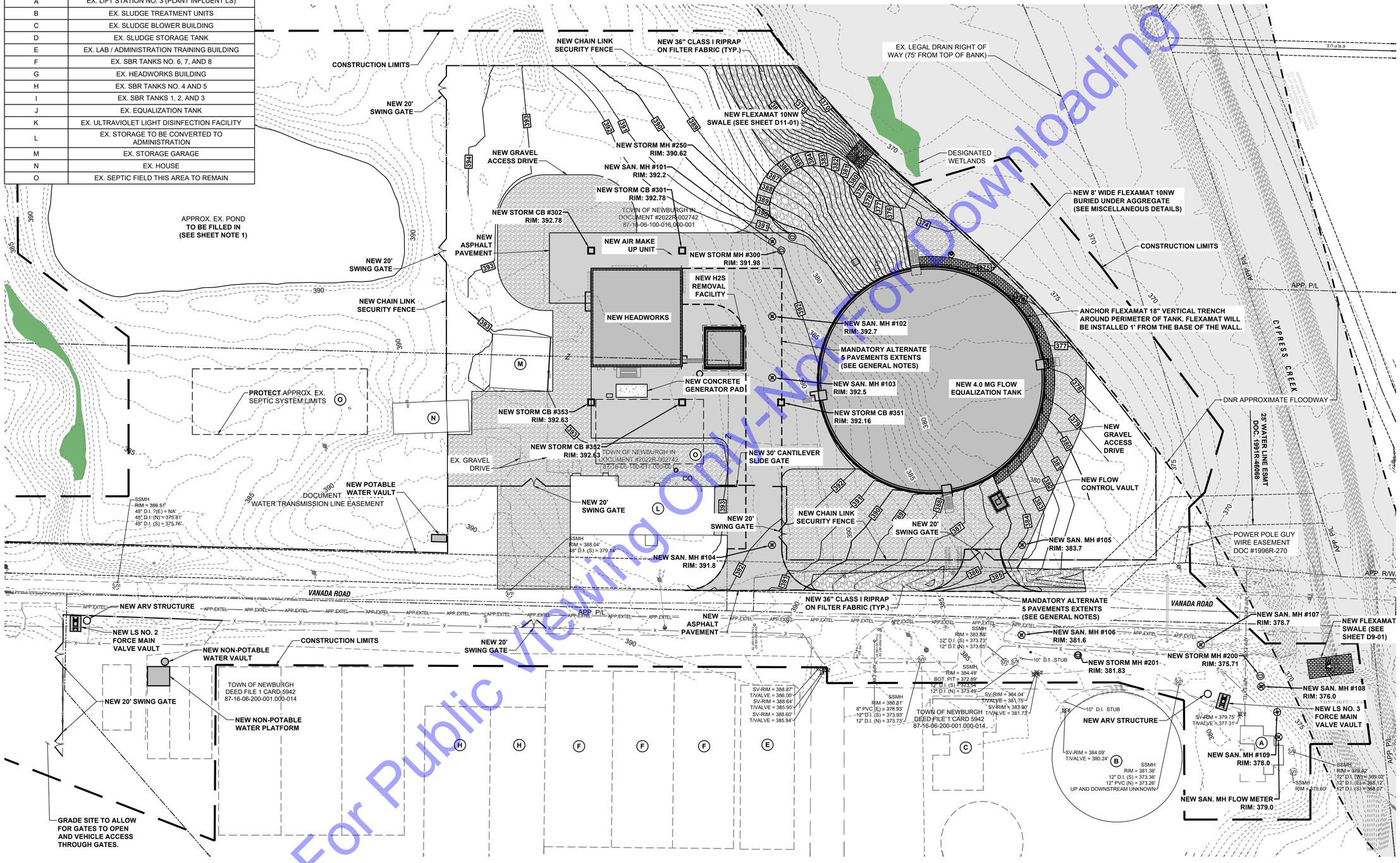

For Public Viewing Only-Not For Downloading

SHEET NOTES

1. POND SHALL BE FILLED PER PROCEDURE AS DESCRIBED IN GEOTECHNICAL REPORT DATED JULY 29, 2025. POND SHALL BE FILLED BEGINNING AT THE NORTH END AND WORKING SOUTHWARD UNDER GEOTECHNICAL ENGINEER SUPERVISION. CONTRACTOR TO UTILIZE EXCESS FILL FROM SITE EXCAVATION, AND FILL POND MAXIMALLY WITH AVAILABLE SOIL. BRINGING ADDITIONAL SOIL FROM OFFSITE IS NOT REQUIRED. PROVIDE SETTLEMENT MONITORING DEVICE PER GEOTECHNICAL REPORT. CONTRACTOR SHALL PROVIDE PERMANENT SIGNAGE STATING "SETTLEMENT MONITORING DEVICE."
2. MANDATORY ALTERNATE 5 IS A DEDUCT OF PAVEMENT AREA AND REDUCS PAVEMENT EXTENTS TO THE OUTLINE OF AREAS SHOWN ON THE PLAN. ALL AREAS PREVIOUSLY SHOWN AS PAVEMENT WILL BE MODIFIED TO NEW GRAVEL DRIVE.
3. NEW AGGREGATE PROVIDED FOR DRIVES MAY BE SUPPLEMENTED WITH EXISTING AGGREGATE DRIVES ON SITE AS NEEDED.

SITE IMPROVEMENTS PLAN

SCALE: 1"=40'-0"

0 40' 80'

COMMONWEALTH ENGINEERS, INC.
A wealth of resources to master a common goal.
https://commonwealthengineers.com/

RUDOLPH J. NOVITCH
REGISTERED
No. PE19400077
INDIANA PROFESSIONAL ENGINEER

Signature 10/03/2025 Date

TOWN OF NEWBURGH
WARRICK COUNTY, INDIANA

WASTEWATER TREATMENT PLANT FLOW EQ BASIN

© 2025 BY COMMONWEALTH ENGINEERS, INC. ALL RIGHTS RESERVED. REPRODUCTION BY ANY METHOD, IN WHOLE OR IN PART WITHOUT PERMISSION IS PROHIBITED

Indiana 811 Know what's below. 811 before you dig. 1-800-382-5544 (ITS THE LAW)

No.	Submittal / Revision	By	Date

Designed By:	Drawn By:	Checked By:
DOF	DMJ	ETP
Issue Date: 10/03/25	Project No: S18005-041	Scale: AS SHOWN

SITE IMPROVEMENTS PLAN

Drawing No: **C-01**

Sheet: 14 OF 161

File: Z:\SHARED\IN CLIENTS M-Z\NEWBURGH\S18005 ON CALL SEWER ENG S\VCS041 WWTP FLOW EQ BASIN\06 CADA CURRENT FILES\1 DRAWINGS\05-EX SITE PLANS.DWG
Saved: 10/2/2025 1:44:25 PM Plotted: 10/2/2025 1:53:58 PM Current User: Drew Jenkins LastSavedBy: djenkins

Ⓐ EXISTING STRUCTURES	
IDENTIFIER	**DESCRIPTION**
A	EX. LIFT STATION NO. 3 (PLANT INFLUENT LS)
B	EX. SLUDGE TREATMENT UNITS
C	EX. SLUDGE BLOWER BUILDING
D	EX. SLUDGE STORAGE TANK
E	EX. LAB / ADMINISTRATION TRAINING BUILDING
F	EX. SBR TANKS NO. 6, 7, AND 8
G	EX. HEADWORKS BUILDING
H	EX. SBR TANKS NO. 4 AND 5
I	EX. SBR TANKS 1, 2, AND 3
J	EX. EQUALIZATION TANK
K	EX. ULTRAVIOLET LIGHT DISINFECTION FACILITY
L	EX. STORAGE TO BE CONVERTED TO ADMINISTRATION
M	EX. STORAGE GARAGE
N	EX. HOUSE
O	EX. SEPTIC FIELD THIS AREA TO REMAIN (SEE NOTE 1)

PLANT NATURAL GAS SYSTEM

CONTRACTOR SHALL FURNISH AND INSTALL UNDERGROUND GAS LINE SYSTEM FROM BUILDING L TO NEW MAKE-UP AIR UNIT. CONTRACTOR SHALL COORDINATE WITH NATURAL GAS UTILITY TO PROVIDE NEW METER AT BUILDING L CAPABLE OF SUPPLYING 1,144,000 CU. FT/HR. TO NEW MAKE-UP AIR UNIT.

1. FOR BIDDING PURPOSES, INCLUDE COSTS FOR INSTALLING 400 FEET OF 2", 2PSI POLYETHYLENE PIPE.
2. THE NEW GAS LINE SYSTEM SHALL INCLUDE ALL PIPE, FITTINGS, VALVES, UNIONS, PRESSURE REDUCING VALVES, FLEXIBLE HOSES, SUPPPORTS, GAS STOPS, AND PROTECTIVE COVERINGS TO MAKE UP A COMPLETE AND OPERATING SYSTEM.
3. CONTRACTOR SHALL INCLUDE ALL COSTS ASSOCIATED WITH EXCAVATION WORK REQUIRED TO INSTALL THIS GAS LINE SYSTEM.
4. CONTRACTOR SHALL COORDINATE ALL WORK ASSOCIATED WITH THIS GAS LINE INSTALLATION WITH THE INSTALLATION OF THE PLANT ELECTRICAL SYSTEM. REFER TO COMPLETE PROJECT DRAWINGS AND SPECIFICATIONS FOR OTHER DETAILS AND REQUIREMENTS.
5. SEPARATION BETWEEN THE ELECTRICAL CONDUITS AND NATURAL GAS LINE SHALL MEET OR EXCEED ALL FEDERAL, STATE, LOCAL, AND UTILITY CODES AND REGULATIONS.
6. GAS LINES AT BUILDING SHALL BE GROUNDED PER NEC.
7. CONTRACTOR SHALL INSTALL AN EARTHQUAKE-ACTUATED GAS-SHUTOFF VALVE MANUFACTURED BY PACIFIC SEISMIC PRODUCTS, INC. OR APPROVED EQUIVALENT.

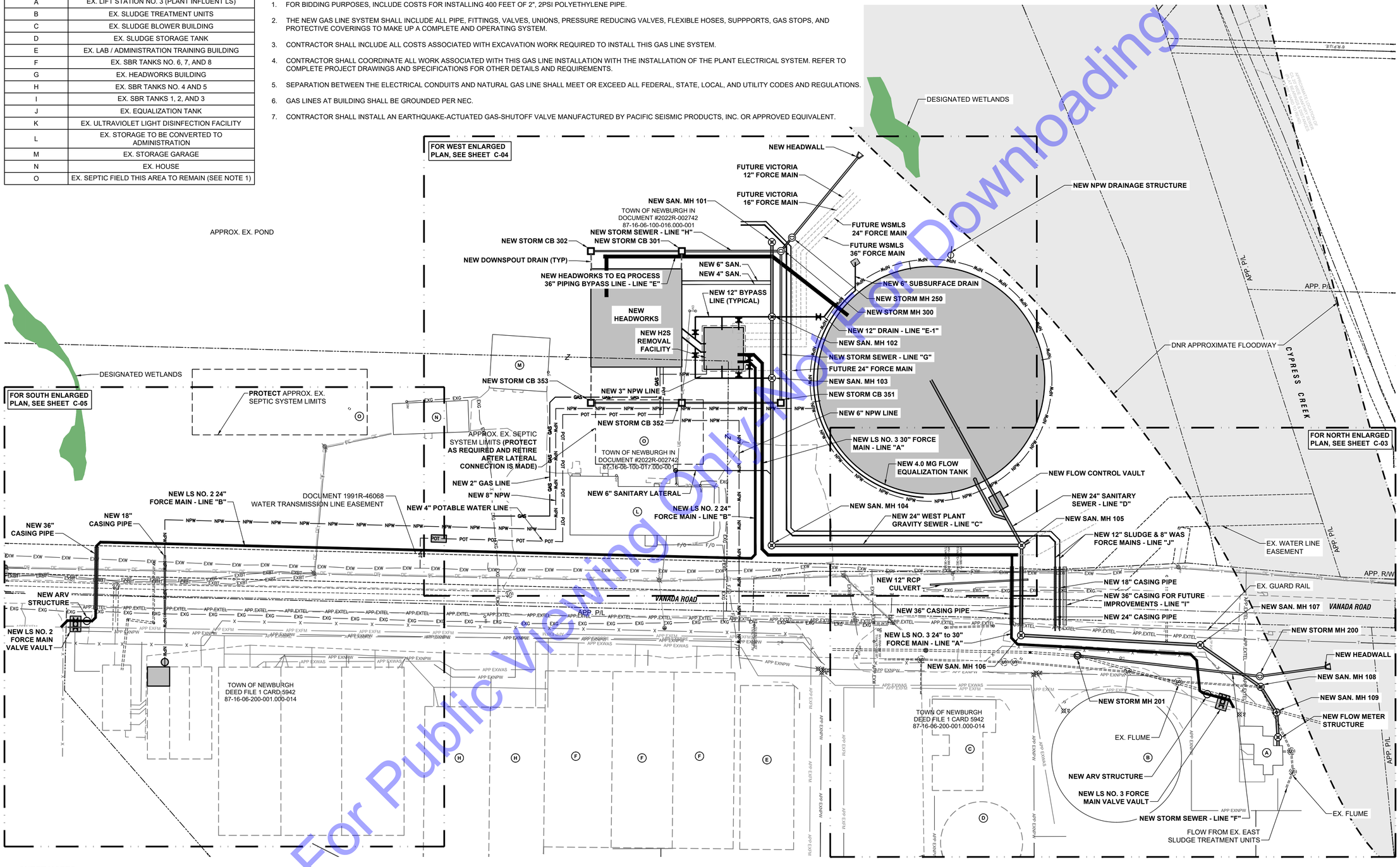

SHEET NOTES

1. EXISTING HOUSES RELY ON SEPTIC SYSTEMS IN AREAS INDICATED. PROTECT DURING CONSTRUCTION.

EXISTING WWTP SITE PIPING IMPROVEMENTS PLAN

SCALE: 1"=40'-0"

0 40' 80'

For Public Viewing Only-Not For Downloading

COMMONWEALTH ENGINEERS, INC.
A wealth of resources to master a common goal.
https://commonwealthengineers.com/

RUDOLPH J. NOTTICH
REGISTERED
No. PE19400077
INDIANA
PROFESSIONAL ENGINEER

Signature 10/03/2025 Date

TOWN OF NEWBURGH
WARRICK COUNTY, INDIANA

WASTEWATER TREATMENT PLANT FLOW EQ BASIN

© 2025 BY COMMONWEALTH ENGINEERS, INC. ALL RIGHTS RESERVED. REPRODUCTION OR USE WITHOUT PERMISSION IS PROHIBITED

Know what's below. 811 before you dig. 1-800-382-5544 (ITS THE LAW)

No.	Submittal / Revision	By	Date

Designed By:	Drawn By:	Checked By:
DOF	DMJ	ETP
Issue Date: 10/03/25	Project No: S18005-041	Scale: AS SHOWN

SITE PIPING IMPROVEMENTS PLAN

Drawing No: **C-02**

Sheet: 15 OF 161

File: Z:\SHARED\IN CLIENTS M-Z\NEWBURGH\S18005 ON CALL SEWER ENG SVCS\041 WWTP FLOW EQ BASIN\06 CADA CURRENT FILES\1 DRAWINGS\05A-EX SITE PIPING PLANS.DWG
Saved: 10/2/2025 11:20:40 AM Plotted: 10/2/2025 1:54:25 PM Current User: Drew Jenkins LastSavedBy: djenkins

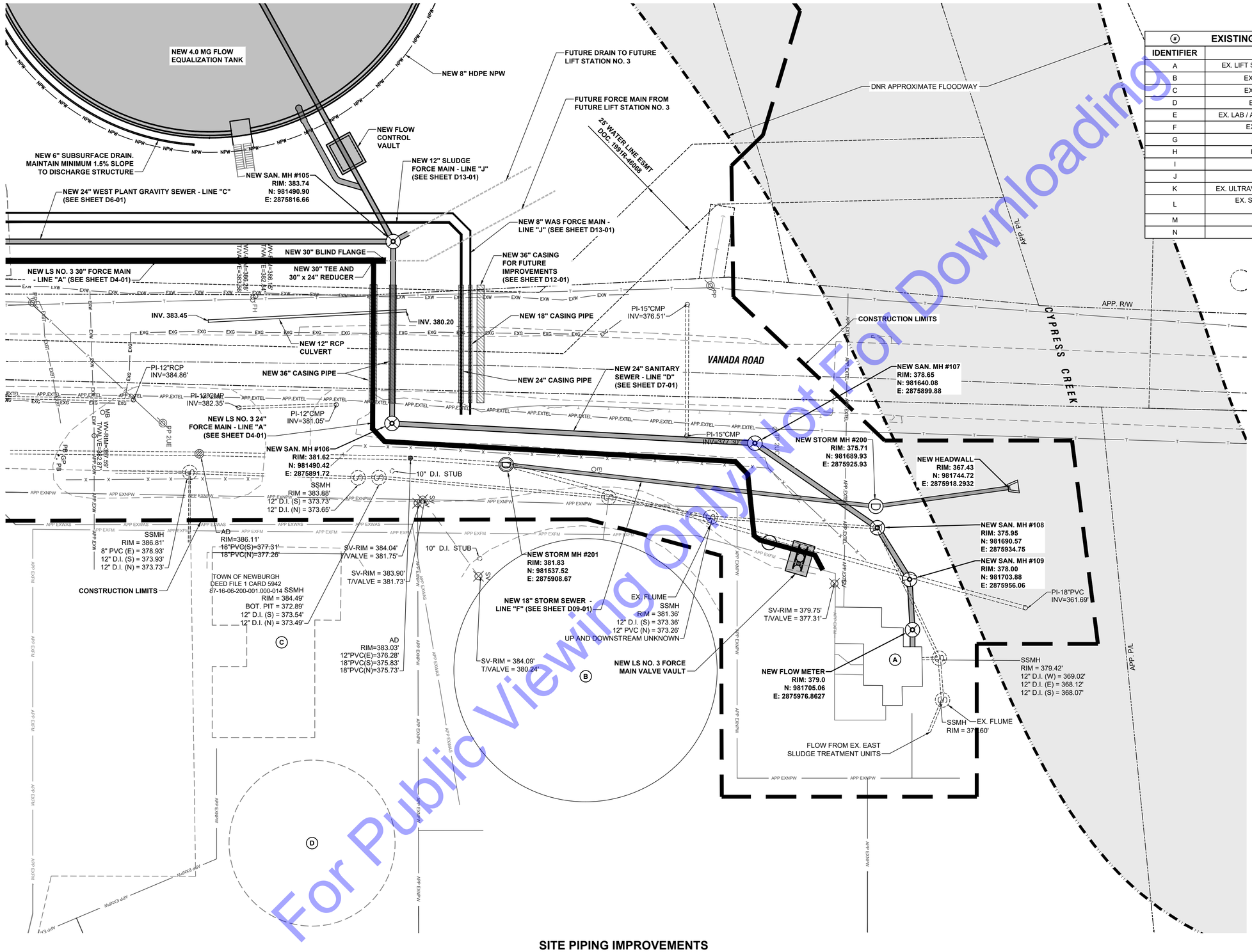

For Public Viewing Only
Not For Downloading

SITE PIPING IMPROVEMENTS NORTH ENLARGED PLAN

SCALE: 1"=20'-0"

0 20' 40'

#	EXISTING STRUCTURES
IDENTIFIER	DESCRIPTION
A	EX. LIFT STATION NO. 3 (PLANT INFLUENT LS)
B	EX. SLUDGE TREATMENT UNITS
C	EX. SLUDGE BLOWER BUILDING
D	EX. SLUDGE STORAGE TANK
E	EX. LAB / ADMINISTRATION TRAINING BUILDING
F	EX. SBR TANKS NO. 6, 7, AND 8
G	EX. HEADWORKS BUILDING
H	EX. SBR TANKS NO. 4 AND 5
I	EX. SBR TANKS 1, 2, AND 3
J	EX. EQUALIZATION TANK
K	EX. ULTRAVIOLET LIGHT DISINFECTION FACILITY
L	EX. STORAGE TO BE CONVERTED TO ADMINISTRATION
M	EX. STORAGE GARAGE
N	EX. HOUSE

SHEET NOTES

1. DRAINAGE SHALL BE DIRECTED AWAY FROM ALL NEW AND EXISTING STRUCTURES - INCLUDING BUT NOT LIMITED TO EQUALIZATION TANK, HEADWORKS, HYDROGEN SULFIDE REMOVAL FACILITY, AND STORAGE BUILDING. INTENT IS TO PROVIDE DRAINAGE TO NEW STORM DRAIN SYSTEM AND PREVENT STANDING WATER. SEE SITE GRADING PLAN FOR DRAINAGE PATTERN.
2. ALL AREAS WITHIN THE FLOODWAY TO BE RESTORED TO EXISTING CONDITIONS AND EXISTING GRADE. FLOODWAY TO ONLY BE UTILIZED AS A STAGING AREA. AND SHALL BE PROTECTED UNLESS PIPING IS PLANNED FOR INSTALL.

COMMONWEALTH ENGINEERS, INC.
A wealth of resources to master a common goal.
https://commonwealthengineers.com/

RUDOLPH J. NOVITCH
REGISTERED
No. PE19400077
INDIANA
PROFESSIONAL ENGINEER

Signature 10/03/2025 Date

TOWN OF NEWBURGH
WARRICK COUNTY, INDIANA

WASTEWATER TREATMENT PLANT FLOW EQ BASIN

© 2025 BY COMMONWEALTH ENGINEERS, INC. ALL RIGHTS RESERVED. REPRODUCTION IN ANY MEDIUM, WHOLE OR IN PART WITHOUT PERMISSION IS PROHIBITED

Indiana 811 Know what's below. 811 before you dig. 1-800-382-5544 (ITS THE LAW)

No.	Submittal / Revision	By	Date

Designed By:	Drawn By:	Checked By:
DOF	DMJ	ETP
Issue Date: 10/03/25	Project No: S18005-041	Scale: AS SHOWN

SITE PIPING IMPROVEMENTS - NORTH ENLARGED PLAN

Drawing No:
C-03
Sheet: 16 OF 161

File: Z:\SHARED\IN CLIENTS M-Z\NEWBURGH\S18005 ON CALL SEWER ENG SVCS\041 WWTP FLOW EQ BASIN\06 CADA CURRENT FILES\11 DRAWINGS\SA-EX SITE PIPING PLANS.DWG
Saved: 10/2/2025 11:20:40 AM Plotted: 10/2/2025 1:54:32 PM Current User: Drew.Jenkins LastSavedBy: djenkins

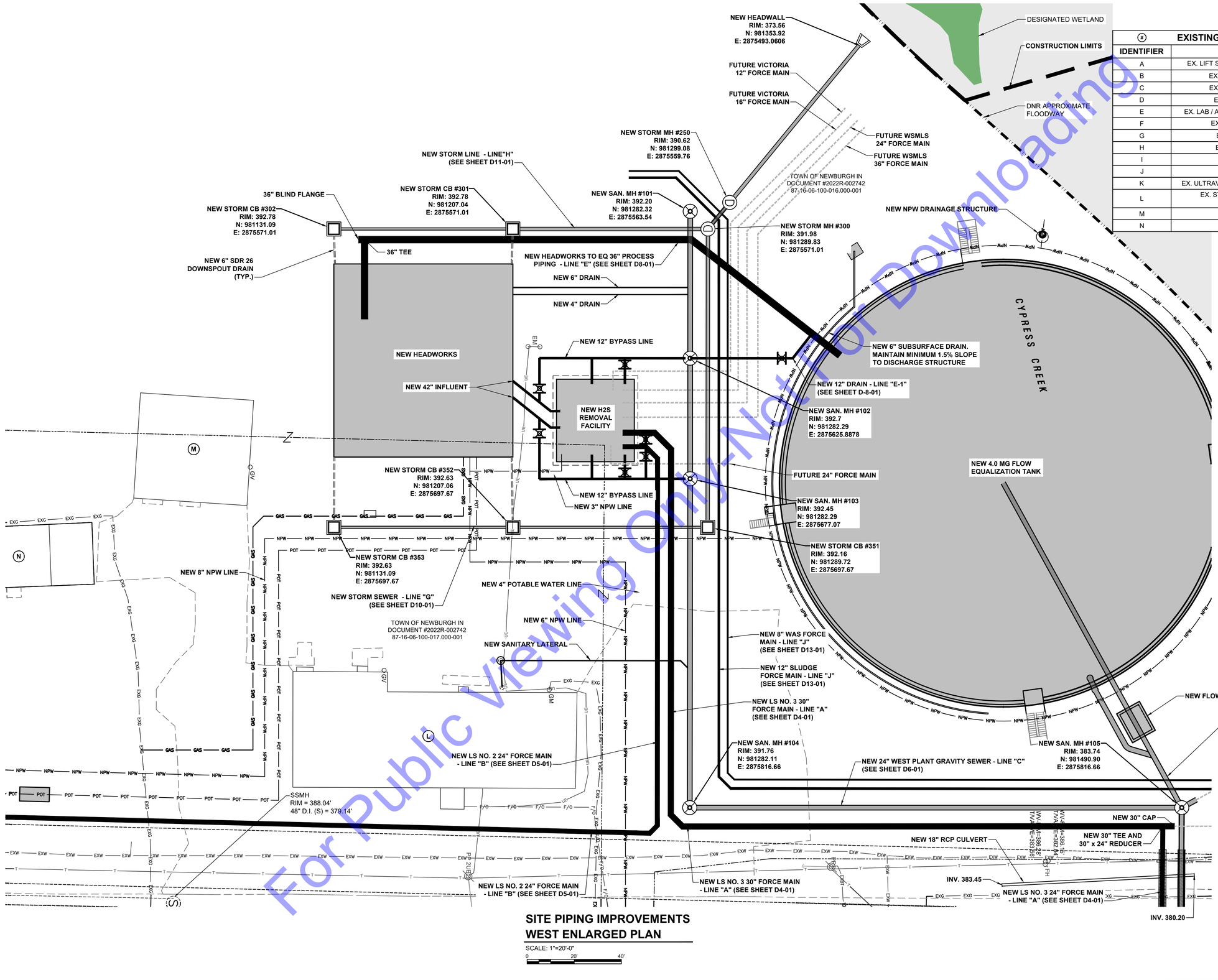

SITE PIPING IMPROVEMENTS
WEST ENLARGED PLAN

SCALE: 1"=20'-0"

0 20' 40'

#	EXISTING STRUCTURES
IDENTIFIER	DESCRIPTION
A	EX. LIFT STATION NO. 3 (PLANT INFLUENT LS)
B	EX. SLUDGE TREATMENT UNITS
C	EX. SLUDGE BLOWER BUILDING
D	EX. SLUDGE STORAGE TANK
E	EX. LAB / ADMINISTRATION TRAINING BUILDING
F	EX. SBR TANKS NO. 6, 7, AND 8
G	EX. HEADWORKS BUILDING
H	EX. SBR TANKS NO. 4 AND 5
I	EX. SBR TANKS 1, 2, AND 3
J	EX. EQUALIZATION TANK
K	EX. ULTRAVIOLET LIGHT DISINFECTION FACILITY
L	EX. STORAGE TO BE CONVERTED TO ADMINISTRATION
M	EX. STORAGE GARAGE
N	EX. HOUSE

SHEET NOTES

1. ALL DOWNSPOUT CONNECTIONS ON NEW HEADWORKS AND EXISTING STORAGE BUILDING TO BE CONNECTED TO NEW STORM DRAIN SYSTEM.
2. DRAINAGE SHALL BE DIRECTED AWAY FROM ALL NEW AND EXISTING STRUCTURES - INCLUDING BUT NOT LIMITED TO EQUALIZATION TANK, HEADWORKS, HYDROGEN SULFIDE REMOVAL FACILITY, AND STORAGE BUILDING. INTENT IS TO PROVIDE DRAINAGE TO NEW STORM DRAIN SYSTEM AND PREVENT STANDING WATER. SEE SITE GRADING PLAN FOR DRAINAGE PATTERN.
3. ALL AREAS WITHIN THE FLOODWAY TO BE RESTORED TO EXISTING CONDITIONS AND EXISTING GRADE. FLOODWAY TO ONLY BE UTILIZED AS A STAGING AREA.

For Public Viewing Only-Not for Downloading

COMMONWEALTH ENGINEERS, INC.
A wealth of resources to master a common goal.
https://commonwealthengineers.com/

RUDOLPH J. NOVLICH
REGISTERED
No. PE19400077
INDIANA
PROFESSIONAL ENGINEER

Signature 10/03/2025 Date

TOWN OF NEWBURGH
WARRICK COUNTY, INDIANA

WASTEWATER TREATMENT
PLANT FLOW EQ BASIN

© 2025 BY COMMONWEALTH ENGINEERS, INC. ALL RIGHTS RESERVED. REPRODUCTION BY ANY METHOD, IN WHOLE OR IN PART WITHOUT PERMISSION IS PROHIBITED

Know what's below. 811 before you dig.
1-800-382-5544
(ITS THE LAW)

No.	Submittal / Revision	By	Date

Designed By:	Drawn By:	Checked By:
DOF	DMJ	ETP
Issue Date:	Project No:	Scale:
10/03/25	S18005-041	AS SHOWN

SITE PIPING IMPROVEMENTS - WEST ENLARGED PLAN

Drawing No:
C-04
Sheet: 17 OF 161

File: Z:\SHARED\IN CLIENTS M-Z\NEWBURGH\S1805 ON CALL SEWER ENG SVCS\041 WWTP FLOW EQ BASIN\06 CADD\ CURRENT FILES \ DRAWINGS\05A-EX SITE PIPING PLANS.DWG
Saved: 10/2/2025 11:20:49 AM Posted: 10/2/2025 1:54:40 PM Current User: Drew.Jenkins LastSavedBy: djenkins

(#)	EXISTING STRUCTURES
IDENTIFIER	DESCRIPTION
A	EX. LIFT STATION NO. 3 (PLANT INFLUENT LS)
B	EX. SLUDGE TREATMENT UNITS
C	EX. SLUDGE BLOWER BUILDING
D	EX. SLUDGE STORAGE TANK
E	EX. LAB / ADMINISTRATION TRAINING BUILDING
F	EX. SBR TANKS NO. 6, 7, AND 8
G	EX. HEADWORKS BUILDING
H	EX. SBR TANKS NO. 4 AND 5
I	EX. SBR TANKS 1, 2, AND 3
J	EX. EQUALIZATION TANK
K	EX. ULTRAVIOLET LIGHT DISINFECTION FACILITY
L	EX. STORAGE TO BE CONVERTED TO ADMINISTRATION
M	EX. STORAGE GARAGE
N	EX. HOUSE

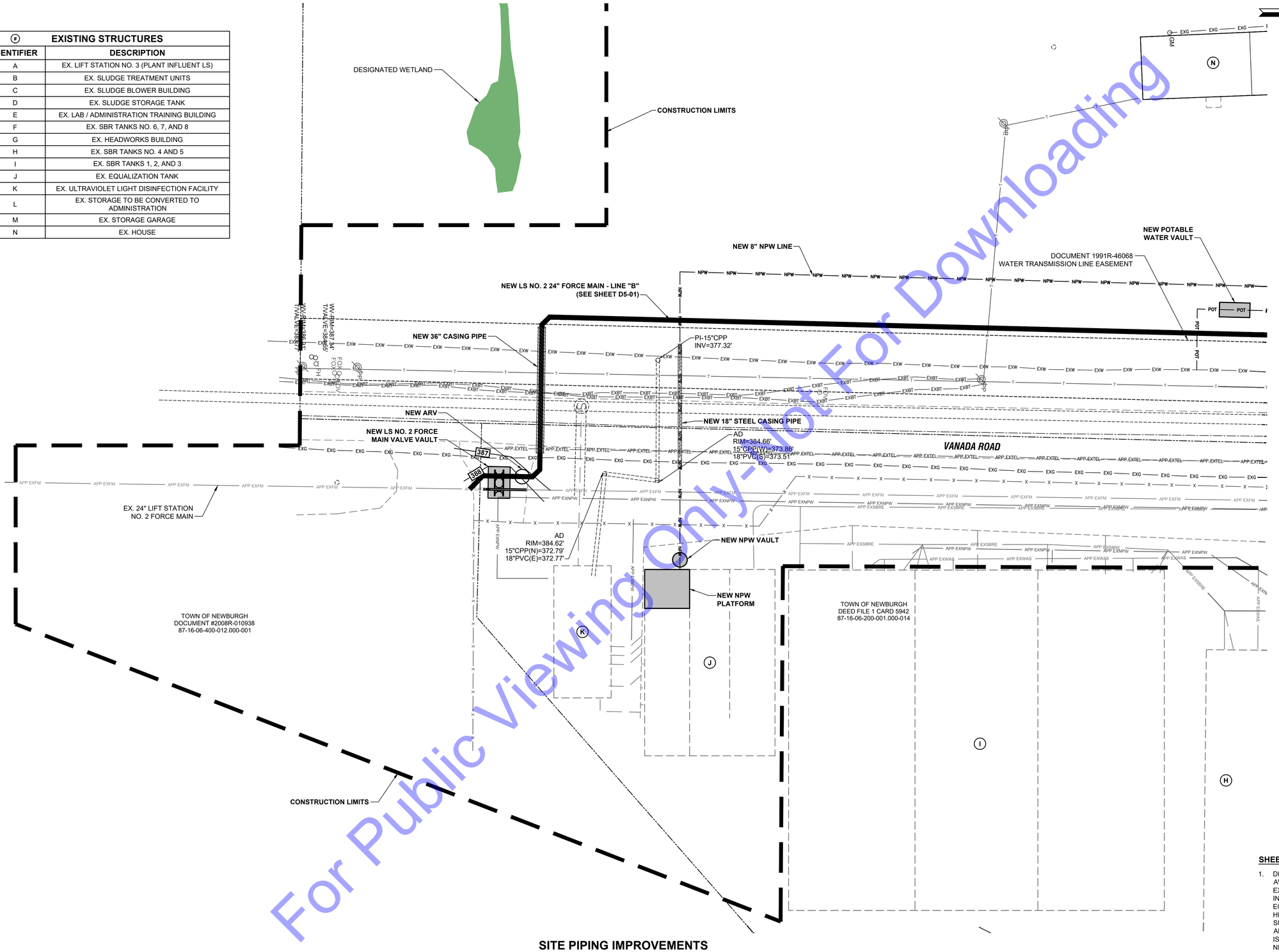

SITE PIPING IMPROVEMENTS
SOUTH ENLARGED PLAN

SCALE: 1"=20'-0"

0 20' 40'

SHEET NOTES

1. DRAINAGE SHALL BE DIRECTED AWAY FROM ALL NEW AND EXISTING STRUCTURES - INCLUDING BUT NOT LIMITED TO EQUALIZATION TANK, HEADWORKS, HYDROGEN SULFIDE REMOVAL FACILITY, AND STORAGE BUILDING. INTENT IS TO PROVIDE DRAINAGE TO NEW STORM DRAIN SYSTEM AND PREVENT STANDING WATER. SEE SITE GRADING PLAN FOR DRAINAGE PATTERN.

For Public Viewing Only - Not For Downloading

COMMONWEALTH ENGINEERS, INC.
A wealth of resources to master a common goal.
https://commonwealthengineers.com/

RUDOLPH J. NOTTICH
REGISTERED
No. PE19400077
INDIANA
PROFESSIONAL ENGINEER
Signature 10/03/2025 Date

TOWN OF NEWBURGH
WARRICK COUNTY, INDIANA

WASTEWATER TREATMENT
PLANT FLOW EQ BASIN

© 2025 BY COMMONWEALTH ENGINEERS, INC. ALL RIGHTS RESERVED. REPRODUCTION IN ANY FORM, IN WHOLE OR IN PART WITHOUT PERMISSION IS PROHIBITED

Know what's below. 811 before you dig.
1-800-382-5544
(ITS THE LAW)

No.	Submittal / Revision	By	Date

Designed By:	Drawn By:	Checked By:
DOF	DMJ	ETP
Issue Date:	Project No:	Scale:
10/03/25	S18005-041	AS SHOWN

SITE PIPING IMPROVEMENTS - SOUTH ENLARGED PLAN

Drawing No:
C-05
Sheet: 18 OF 161

File: Z:\SHARED\IN CLIENTS M-Z\NEWBURGH\S18005 ON CALL SEWER ENG SVCS\041 WWTP FLOW EQ BASIN\06 CADA CURRENT FILES\1 DRAWINGS\05A-EX SITE PIPING PLANS.DWG
Saved: 10/2/2025 11:20:40 AM Plotted: 10/2/2025 1:54:45 PM Current User: Drew Jenkins LastSavedBy: djenkins

Ⓐ EXISTING STRUCTURES	
IDENTIFIER	**DESCRIPTION**
A	EX. LIFT STATION NO. 3 (PLANT INFLUENT LS)
B	EX. SLUDGE TREATMENT UNITS
C	EX. SLUDGE BLOWER BUILDING
D	EX. SLUDGE STORAGE TANK
E	EX. LAB / ADMINISTRATION TRAINING BUILDING
F	EX. SBR TANKS NO. 6, 7, AND 8
G	EX. HEADWORKS BUILDING
H	EX. SBR TANKS NO. 4 AND 5
I	EX. SBR TANKS 1, 2, AND 3
J	EX. EQUALIZATION TANK
K	EX. ULTRAVIOLET LIGHT DISINFECTION FACILITY
L	EX. STORAGE TO BE CONVERTED TO ADMINISTRATION
M	EX. STORAGE GARAGE
N	EX. HOUSE
O	EX. SEPTIC FIELD THIS AREA TO REMAIN (SEE NOTE 1)

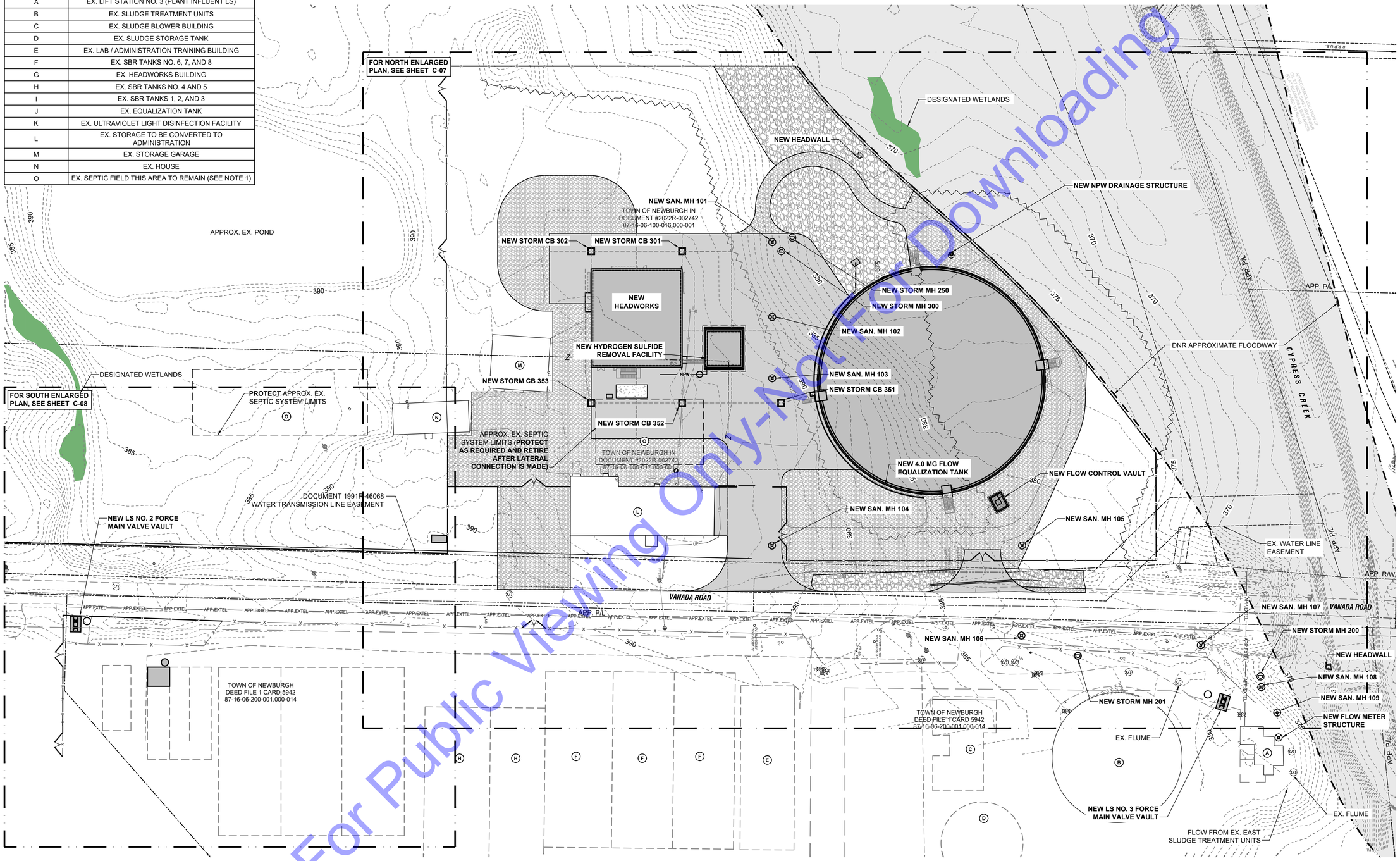

SHEET NOTES

1. EXISTING HOUSES RELY ON SEPTIC SYSTEMS IN AREAS INDICATED. PROTECT DURING CONSTRUCTION.
2. EXISTING CONTOURS SHOWN ON THIS SHEET.

SITE IMPROVEMENTS LOCATION KEY PLAN

SCALE: 1"=40'-0"

0 40' 80'

For Public Viewing Only-Not For Downloading

COMMONWEALTH ENGINEERS, INC.
A wealth of resources to master a common goal.
https://commonwealthengineers.com/

RUDOLPH J. NOTTICH
REGISTERED
No. PE19400077
INDIANA PROFESSIONAL ENGINEER

Signature 10/03/2025 Date

TOWN OF NEWBURGH
WARRICK COUNTY, INDIANA

WASTEWATER TREATMENT PLANT FLOW EQ BASIN

© 2025 BY COMMONWEALTH ENGINEERS, INC. ALL RIGHTS RESERVED. REPRODUCTION BY ANY METHOD IN WHOLE OR IN PART WITHOUT PERMISSION IS PROHIBITED

Indiana 811 Know what's below. 811 before you dig 1-800-382-5544 (ITS THE LAW)

No.	Submittal / Revision	By	Date

Designed By:	Drawn By:	Checked By:
DOF	DMJ	ETP
Issue Date: 10/03/25	Project No: S18005-041	Scale: AS SHOWN

SITE IMPROVEMENTS LOCATION KEY PLAN

Drawing No: **C-06**

Sheet: 19 OF 161

File: Z:\SHARED\IN CLIENTS M-Z\NEWBURGH\S18005 ON CALL SEWER ENG SVCS\041 WWTP FLOW EQ BASIN\06 CADA CURRENT FILES\1 DRAWINGS\06-EX SITE LOCATION PLANS.DWG
Saved: 10/2/2025 1:28:09 PM Plotted: 10/2/2025 1:55:14 PM Current User: Drew Jenkins LastSavedBy: djenkins

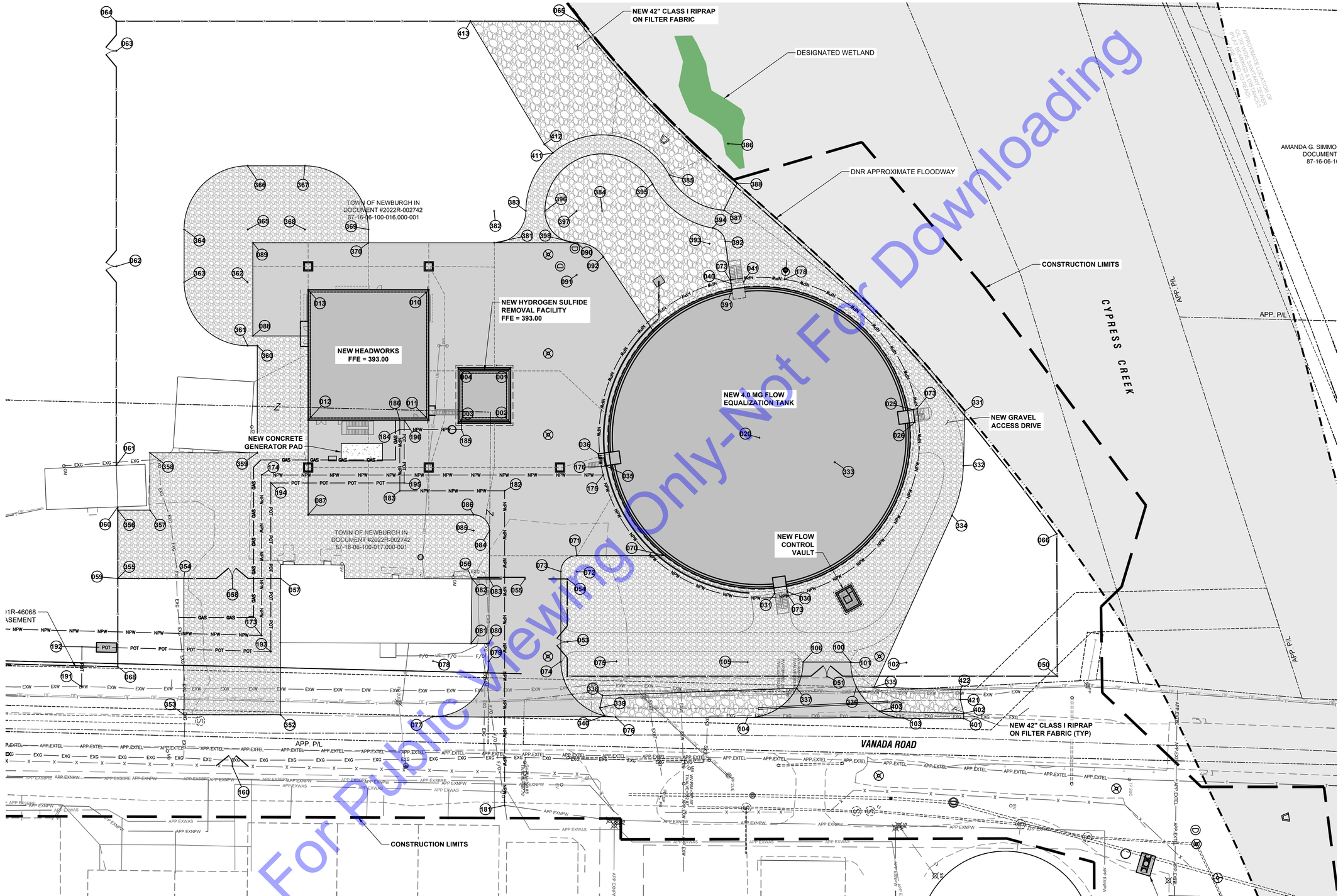

For Public Viewing Only-Not For Downloading

SITE IMPROVEMENTS LOCATION PLAN - NORTH

SCALE: 1"=30'-0"

0 30' 60'

COMMONWEALTH ENGINEERS, INC.
A wealth of resources to master a common goal.
https://commonwealthengineers.com/

RUDOLPH J. NOTTICH
REGISTERED
No. PE19400077
INDIANA
PROFESSIONAL ENGINEER

Signature 10/03/2025 Date

TOWN OF NEWBURGH
WARRICK COUNTY, INDIANA

WASTEWATER TREATMENT
PLANT FLOW EQ BASIN

© 2025 BY COMMONWEALTH ENGINEERS, INC. ALL RIGHTS RESERVED. REPRODUCTION OR ASSIGNMENT TO THIRD PARTIES OR IN PART WITHOUT PERMISSION IS PROHIBITED

Know what's below. 811 before you dig.
1-800-382-5544
(ITS THE LAW)

No.	Submittal / Revision	By	Date

Designed By:	Drawn By:	Checked By:
DOF	DMJ	ETP
Issue Date:	Project No:	Scale:
10/03/25	S18005-041	AS SHOWN

SITE IMPROVEMENTS LOCATION PLAN - NORTH

Drawing No:
C-07
Sheet: 20 OF 161

File: Z:\SHARED\IN CLIENTS M-Z\NEWBURGH\S18005 ON CALL SEWER ENG S\VCS041 WWTP FLOW EQ BASIN\05 CADA CURRENT FILES\1 DRAWINGS\05SB-EX SITE LOCATION PLANS.DWG
Saved: 10/2/2025 1:28:09 PM Plotted: 10/2/2025 1:55:25 PM Current User: Drew Jenkins LastSavedBy: djenkins

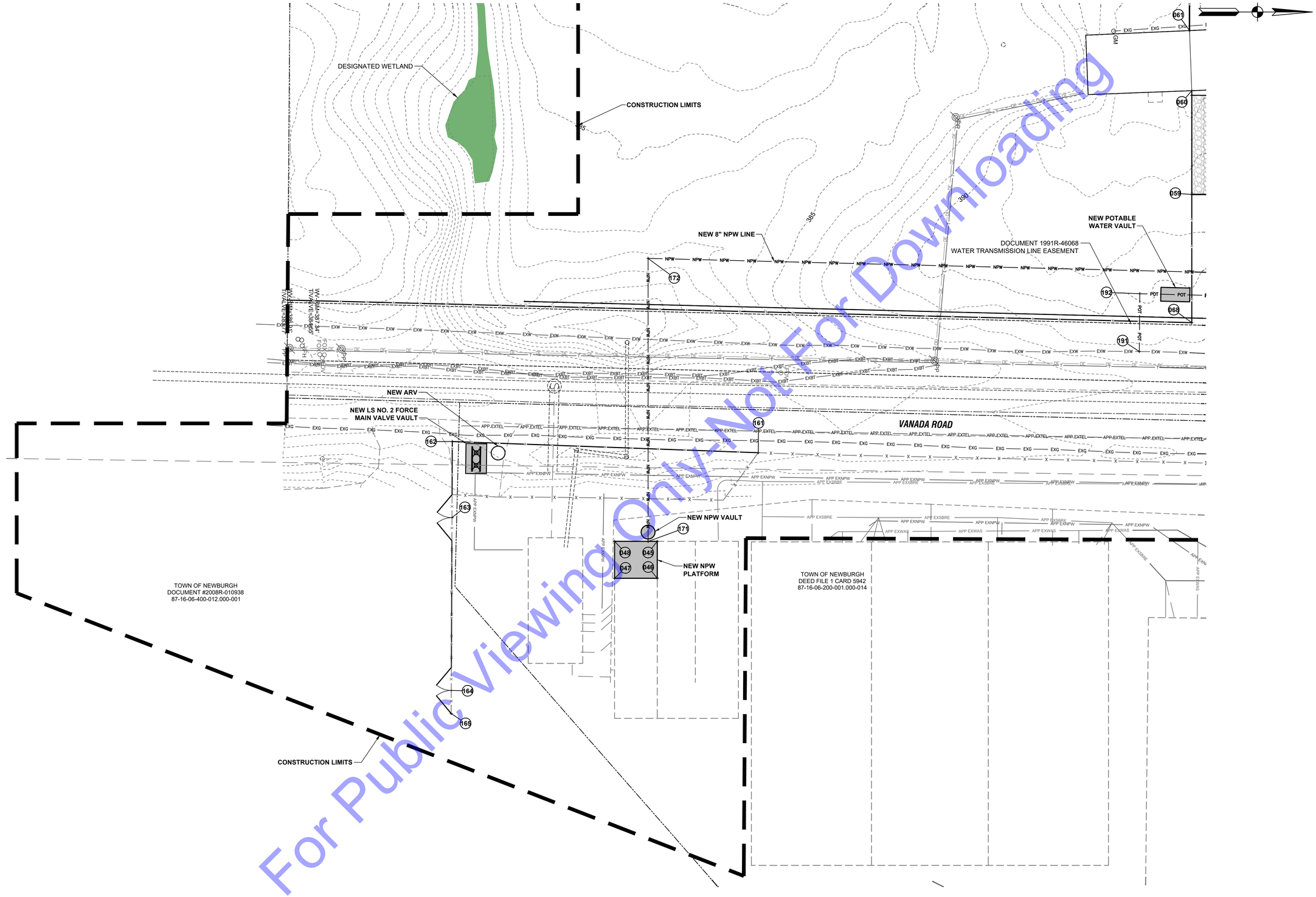

SITE IMPROVEMENTS LOCATION PLAN - SOUTH

SCALE: 1"=20'-0"

0 20' 40'

For Public Viewing Only-Not For Downloading

COMMONWEALTH ENGINEERS, INC.
A wealth of resources to master a common goal.
https://commonwealthengineers.com/

RUDOLPH J. NOTTOCH
REGISTERED
No. PE19400077
INDIANA
PROFESSIONAL ENGINEER

Signature 10/03/2025 Date

TOWN OF NEWBURGH
WARRICK COUNTY, INDIANA

WASTEWATER TREATMENT
PLANT FLOW EQ BASIN

© 2025 BY COMMONWEALTH ENGINEERS, INC. ALL RIGHTS RESERVED. REPRODUCTION BY ANY METHOD, IN WHOLE OR IN PART WITHOUT PERMISSION IS PROHIBITED

Know what's below. 811 before you dig.
1-800-382-5544
(ITS THE LAW)

No.	Submittal / Revision	By	Date

Designed By:	Drawn By:	Checked By:
DOF	DMJ	ETP
Issue Date:	Project No:	Scale:
10/03/25	S18005-041	AS SHOWN

SITE IMPROVEMENTS LOCATION PLAN - SOUTH

Drawing No:
C-08
Sheet: 21 OF 161

File: Z:\SHARED\IN CLIENTS M-Z\NEWBURGH\S18005 ON CALL SEWER ENG SVCS\041 WWTP FLOW EQ BASIN\06 CADA CURRENT FILES\1 DRAWINGS\005B-EX SITE LOCATION PLANS.DWG
Saved: 10/2/2025 1:28:09 PM Plotted: 10/2/2025 1:55:34 PM Current User: Drew Jenkins LastSavedBy: djenkins

NE LOCATION TABLE

POINT	DESCRIPTION	NORTHING	EASTING
001	NW COR H2S FACILITY	981258.59	2875634.81
002	NE COR H2S FACILITY	981258.59	2875669.81
003	SE COR H2S FACILITY	981225.59	2875669.81
004	SW COR H2S FACILITY	981225.59	2875634.81
010	NW COR HEADWORKS	981207.06	2875585.84
011	NE COR HEADWORKS	981207.06	2875667.84
012	SE COR HEADWORKS	981131.09	2875667.84
013	SW COR HEADWORKS	981131.09	2875585.84
020	CENTER FLOW EQ TANK - STA. 1+00 LINE "D"	981415.18	2875678.91
025	NW CORNER NORTH PLATFORM	981512.16	2875661.24
026	NE COR NORTH PLATFORM	981513.27	2875669.16
030	NE COR EAST PLATFORM	981432.85	2875775.89
031	SE COR EAST PLATFORM	981424.93	2875777.00
035	SE COR SOUTH PLATFORM	981318.28	2875696.57
036	SW COR SOUTH PLATFORM	981313.86	2875689.11
040	SW COR WEST PLATFORM	981397.49	2875581.93
041	NW COR WEST PLATFORM	981405.43	2875580.81
045	NW COR NPW PLATFORM	980779.19	2875918.10
046	NE COR NPW PLATFORM	980779.19	2875934.14
047	SE COR NPW PLATFORM	980760.66	2875934.14
048	SW COR NPW PLATFORM	980760.66	2875918.10
050	NE COR SECURITY FENCE	981602.86	2875829.08
051	CEN 20' SWING GATE	981457.76	2875829.08
052	COR SECURITY GATE	981294.23	2875829.08
053	CEN 20' SWING GATE	981294.23	2875807.47
054	COR SECURITY FENCE	981294.23	2875767.83
055	CEN 30' CANTILEVER GATE	981267.70	2875767.86
056	END POST SECURITY FENCE	981234.28	2875767.83
057	END POST SECURITY FENCE	981113.71	2875767.53
058	CEN 20' SWING GATE	981083.27	2875767.53
059	SECURITY FENCE TEE	981011.21	2875767.53
060	END POST SECURITY FENCE	981011.21	2875722.50
061	END POST SECURITY FENCE	981010.22	2875696.38
062	CEN 20' SWING GATE	981010.22	2875571.01
063	CEN 20' SWING GATE	981010.22	2875435.38
064	SW CORSECURITY FENCE	981010.22	2875416.66
065	NW COR SECURITY FENCE	981301.21	2875416.66
066	NW COR SECURITY FENCE	981602.56	2875739.48
068	COR SECURITY FENCE	981011.21	2875823.18
069	END POST SECURITY FENCE	980618.74	2875813.37
070	ASPHALT PAVEMENT	981356.01	2875753.23
071	PT ASPHALT PAVEMENT	981300.23	2875753.23
072	RADIUS POINT ASPHALT PAVEMENT	981300.23	2875763.23
073	PT ASPHALT PAVEMENT	981290.23	2875763.23
074	PT ASPHALT PAVEMENT	981290.23	2875819.75
075	RADIUS POINT ASPHALT PAVEMENT	981325.23	2875819.75
076	PT ASPHALT PAVEMENT	981324.54	2875854.74
077	PT ASPHALT PAVEMENT	981209.48	2875854.57
078	RADIUS POINT ASPHALT PAVEMENT	981209.75	2875819.57
079	PT ASPHALT PAVEMENT	981244.75	2875819.84
080	COR ASPHALT PAVEMENT	981244.84	2875808.50

NE LOCATION TABLE

POINT	DESCRIPTION	NORTHING	EASTING
081	ASPHALT PAVEMENT	981233.65	2875808.46
082	ASPHALT PAVEMENT	981234.28	2875767.83
083	COR ASPHALT PAVEMENT	981245.15	2875767.87
084	PT ASPHALT PAVEMENT	981245.38	2875737.53
085	RADIUS POINT ASPHALT PAVEMENT	981235.38	2875737.45
086	PT ASPHALT PAVEMENT	981235.38	2875727.45
087	COR ASPHALT PAVEMENT	981131.09	2875727.51
088	COR ASPHALT PAVEMENT	981096.26	2875614.85
089	COR ASPHALT PAVEMENT	981096.26	2875556.17
090	PT ASPHALT PAVEMENT	981300.47	2875556.21
091	RADIUS POINT ASPHALT PAVEMENT	981300.29	2875576.39
092	PT ASPHALT PAVEMENT	981317.03	2875565.03
093	ASPHALT PAVEMENT	981348.31	2875611.43
100	COR ASPHALT PAVEMENT	981472.80	2875820.18
101	PT ASPHALT PAVEMENT	981472.80	2875820.53
102	RADIUS POINT ASPHALT PAVEMENT	981507.80	2875820.53
103	PT ASPHALT PAVEMENT	981506.20	2875855.50
104	PT ASPHALT PAVEMENT	981407.60	2875855.18
105	RADIUS POINT ASPHALT PAVEMENT	981407.80	2875820.18
106	PT ASPHALT PAVEMENT	981442.80	2875820.18
160	CEN 20' SWING GATE	981083.27	2875885.60
161	END POST SECURITY FENCE	980823.03	2875879.64
162	SW COR SECURITY FENCE	980690.21	2875874.78
163	CEN 20' SWING GATE	980690.09	2875907.82
164	CEN 20' SWING GATE	980689.79	2875982.84
165	SE COR SECURITY FENCE	980689.75	2875992.84
171	NPW LINE	980775.21	2875918.10
172	90° BEND NPW LINE	980775.21	2875795.27
173	90° BEND NPW LINE	981101.76	2875803.43
174	90° BEND NPW LINE	981101.73	2875702.43
175	TEE NPW LINE	981316.94	2875702.37
176	TEE NPW LINE	981315.85	2875697.21
177	TEE NPW LINE	981396.88	2875579.58
178	TEE NPW LINE	981431.17	2875579.18
179	TEE NPW LINE	981514.51	2875660.61
180	TEE NPW LINE	981433.48	2875778.24
181	TEE NPW LINE	981254.84	2875910.43
182	90° BEND NPW LINE	981254.84	2875712.38
183	90° BEND NPW LINE	981188.83	2875712.40
184	TEE NPW LINE	981188.81	2875673.83
185	90° BEND NPW LINE	981227.69	2875673.81
186	NPW LINE	981188.80	2875667.84
191	TEE POT LINE	980988.42	2875835.70
192	90° BEND POT LINE	980988.63	2875810.61
193	90° BEND POT LINE	981107.62	2875813.58
194	90° BEND POT LINE	981107.59	2875707.43
195	90° BEND POT LINE	981191.57	2875707.40
196	POT LINE	981191.55	2875667.84
331	NW COR GRAVEL PAVEMENT	981544.71	2875662.13
332	PT GRAVEL PAVEMENT	981543.75	2875696.59
333	RADIUS POINT GRAVEL PAVEMENT	981462.78	2875694.33

NE LOCATION TABLE

POINT	DESCRIPTION	NORTHING	EASTING
334	PT GRAVEL PAVEMENT	981536.54	2875727.80
335	NE COR GRAVEL PAVEMENT	981487.40	2875836.08
336	GRAVEL PAVEMENT	981476.31	2875835.80
337	GRAVEL PAVEMENT	981438.71	2875836.60
338	GRAVEL PAVEMENT	981316.51	2875841.24
339	GRAVEL PAVEMENT	981314.74	2875849.05
340	GRAVEL PAVEMENT	981317.75	2875853.94
351	GRAVEL PAVEMENT	981113.67	2875808.01
352	GRAVEL PAVEMENT	981113.67	2875853.40
353	GRAVEL PAVEMENT	981052.84	2875853.32
354	GRAVEL PAVEMENT	981052.84	2875767.53
355	GRAVEL PAVEMENT	981011.21	2875767.53
356	GRAVEL PAVEMENT	981011.21	2875724.50
357	GRAVEL PAVEMENT	981031.40	2875724.50
358	GRAVEL PAVEMENT	981031.40	2875688.41
359	GRAVEL PAVEMENT	981099.04	2875688.41
360	GRAVEL PAVEMENT	981099.03	2875621.01
361	PT GRAVEL PAVEMENT	981093.05	2875621.01
362	RADIUS POINT GRAVEL PAVEMENT	981092.98	2875581.01
363	PT GRAVEL PAVEMENT	981052.98	2875581.01
364	PT GRAVEL PAVEMENT	981052.98	2875547.80
365	RADIUS POINT GRAVEL PAVEMENT	981093.04	2875547.80
366	PT GRAVEL PAVEMENT	981092.98	2875507.73
367	PT GRAVEL PAVEMENT	981129.07	2875507.73
368	RADIUS POINT GRAVEL PAVEMENT	981129.07	2875547.80
369	PT GRAVEL PAVEMENT	981169.06	2875547.80
370	GRAVEL PAVEMENT	981169.06	2875556.18
381	PT GRAVEL PAVEMENT	981248.22	2875556.17
382	REDIUS POINT GRAVEL PAVEMENT	981248.22	2875536.17
383	PT GRAVEL PAVEMENT	981268.22	2875536.18
384	RADIUS POINT GRAVEL PAVEMENT	981316.14	2875536.19
385	PT GRAVEL PAVEMENT	981358.57	2875513.61
386	RADIUS POINT GRAVEL PAVEMENT	981395.54	2875493.83
387	PT GRAVEL PAVEMENT	981392.94	2875535.68
388	COR GRAVEL PAVEMENT	981401.20	2875518.60
391	GRAVEL PAVEMENT	981398.00	2875585.47
392	PT GRAVEL PAVEMENT	981393.78	2875555.37
393	RADIUS POINT GRAVEL PAVEMENT	981383.87	2875556.76
394	PT GRAVEL PAVEMENT	981385.72	2875546.93
395	PT GRAVEL PAVEMENT	981347.98	2875519.26
396	PT GRAVEL PAVEMENT	981280.22	2875536.20
397	RADIUS POINT GRAVEL PAVEMENT	981300.22	2875536.22
398	PT GRAVEL PAVEMENT	981299.15	2875556.19
401	GRAVEL PAVEMENT	981543.97	2875855.68
402	GRAVEL PAVEMENT	981543.92	2875852.58
403	GRAVEL PAVEMENT	981490.81	2875851.13
411	RIP RAP	981285.24	2875499.56
412	RIP RAP	981279.85	2875494.17
413	RIP RAP	981233.30	2875416.66
421	RIP RAP	981541.84	2875843.70
422	RIP RAP	981542.00	2875837.44

For Public Viewing Only
NOT For Downloading

COMMONWEALTH ENGINEERS, INC.
A wealth of resources to master a common goal.
https://commonwealthengineers.com/

RUDOLPH J. NOLTICH
REGISTERED
No. PE19400077
INDIANA
PROFESSIONAL ENGINEER

Signature 10/03/2025 Date

TOWN OF NEWBURGH
WARRICK COUNTY, INDIANA

WASTEWATER TREATMENT
PLANT FLOW EQ BASIN

© 2025 BY COMMONWEALTH ENGINEERS, INC.: ALL RIGHTS RESERVED. REPRODUCTION IN ANY MEDIA, IN WHOLE OR IN PART WITHOUT PERMISSION IS PROHIBITED

Know what's below. 811 before you dig
1-800-382-5544
(ITS THE LAW)

No.	Submittal / Revision	By	Date

Designed By:	Drawn By:	Checked By:
DOF	DMJ	ETP
Issue Date: 10/03/25	Project No: S18005-041	Scale: AS SHOWN

SITE IMPROVEMENTS
LOCATION DATA TABLE

Drawing No:
C-09
Sheet: 22 OF 161

File: Z:\SHARED\IN CLIENTS M-Z\NEWBURGH\S18005 ON CALL SEWER ENG SVC\5041 WWTP FLOW EQ BASIN\05 CADA CURRENT FILES\1 DRAWINGS\05B-EX SITE LOCATION PLANS.DWG
Saved: 10/2/2025 1:28:09 PM Plotted: 10/2/2025 1:56:34 PM Current User: Drew.Jenkins LastSavedBy: djenkins

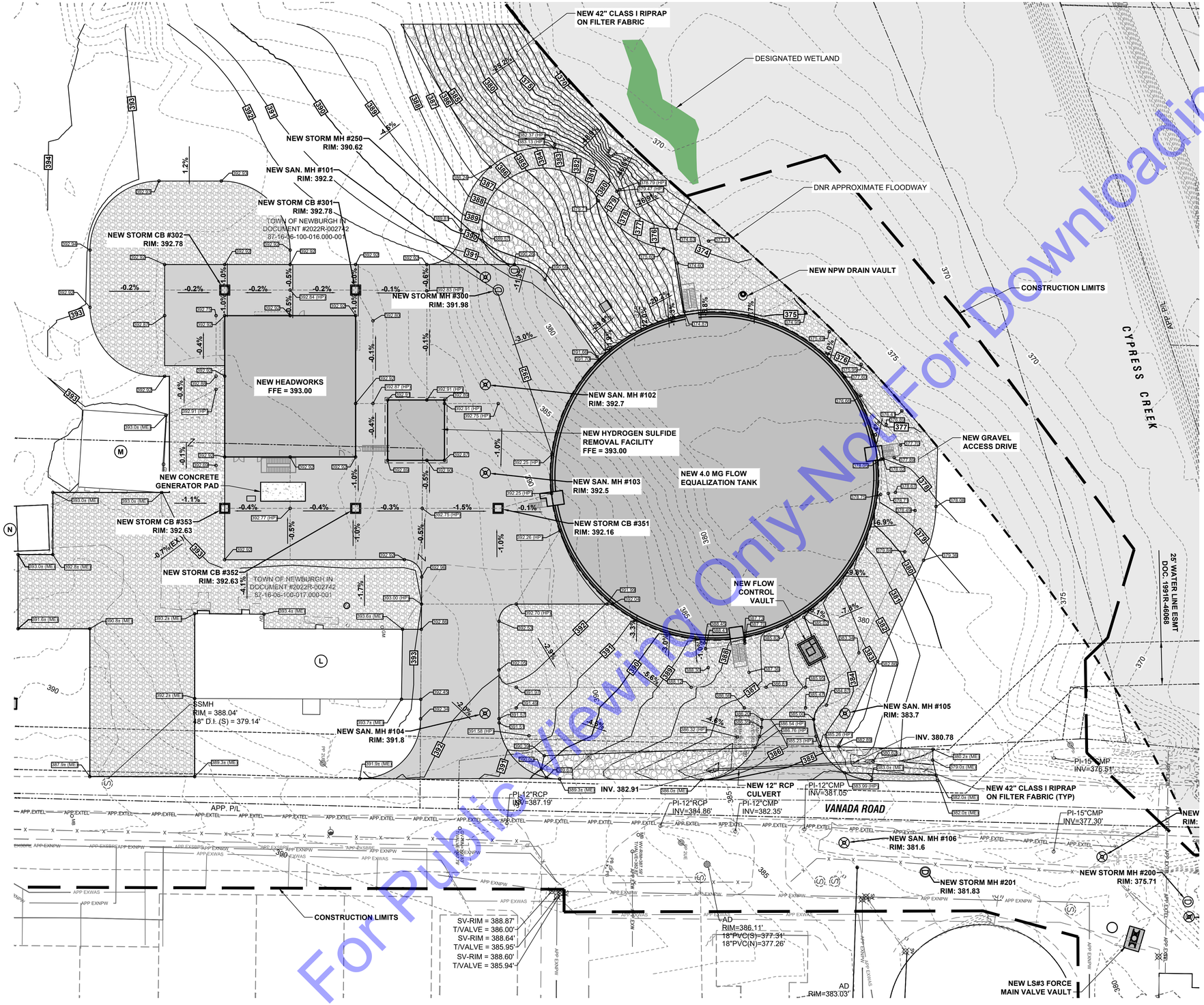

SITE GRADING PLAN

SCALE: 1"=30'-0"

0 30' 60'

#	EXISTING STRUCTURES
IDENTIFIER	DESCRIPTION
A	EX. LIFT STATION NO. 3 (PLANT INFLUENT LS)
B	EX. SLUDGE TREATMENT UNITS
C	EX. SLUDGE BLOWER BUILDING
D	EX. SLUDGE STORAGE TANK
E	EX. LAB / ADMINISTRATION TRAINING BUILDING
F	EX. SBR TANKS NO. 6, 7, AND 8
G	EX. HEADWORKS BUILDING
H	EX. SBR TANKS NO. 4 AND 5
I	EX. SBR TANKS 1, 2, AND 3
J	EX. EQUALIZATION TANK
K	EX. ULTRAVIOLET LIGHT DISINFECTION FACILITY
L	EX. STORAGE TO BE CONVERTED TO ADMINISTRATION
M	EX. STORAGE GARAGE
N	EX. HOUSE

SHEET NOTES

1. CONTRACTOR SHALL SLOPE PAVEMENT TO DIRECT DRAINAGE AWAY FROM NEW AND EXISTING STRUCTURES AND TO NEW STORM DRAIN SYSTEM OR TO DITCH/CYPRESS CREEK.

For Public Viewing Only-Not For Downloading

COMMONWEALTH ENGINEERS, INC.
A wealth of resources to master a common goal.
https://commonwealthengineers.com/

RUDOLPH J. NOVITCH
REGISTERED
No. PE19400077
INDIANA
PROFESSIONAL ENGINEER

Signature 10/03/2025 Date

TOWN OF NEWBURGH
WARRICK COUNTY, INDIANA

WASTEWATER TREATMENT
PLANT FLOW EQ BASIN

© 2025 BY COMMONWEALTH ENGINEERS, INC. ALL RIGHTS RESERVED. REPRODUCTION BY ANY METHOD, IN WHOLE OR IN PART WITHOUT PERMISSION IS PROHIBITED

Indiana 811 Know what's below. 811 before you dig. 1-800-382-5544 (ITS THE LAW)

No.	Submittal / Revision	By	Date

Designed By:	Drawn By:	Checked By:
DOF	DMJ	ETP
Issue Date: 10/03/25	Project No: S18005-041	Scale: AS SHOWN

SITE GRADING PLAN

Drawing No:
C-10
Sheet: 23 OF 161

File: Z:\SHARED\IN CLIENTS M-Z\NEWBURGH\S18005 ON CALL SEWER ENG SVCS\041 WWTP FLOW EQ BASIN\06 CADA CURRENT FILES\1 DRAWINGS\05-ES SITE PLANS.DWG
Saved: 10/2/2025 1:44:25 PM Plotted: 10/2/2025 1:57:04 PM Current User: Drew Jenkins LastSavedBy: djenkins

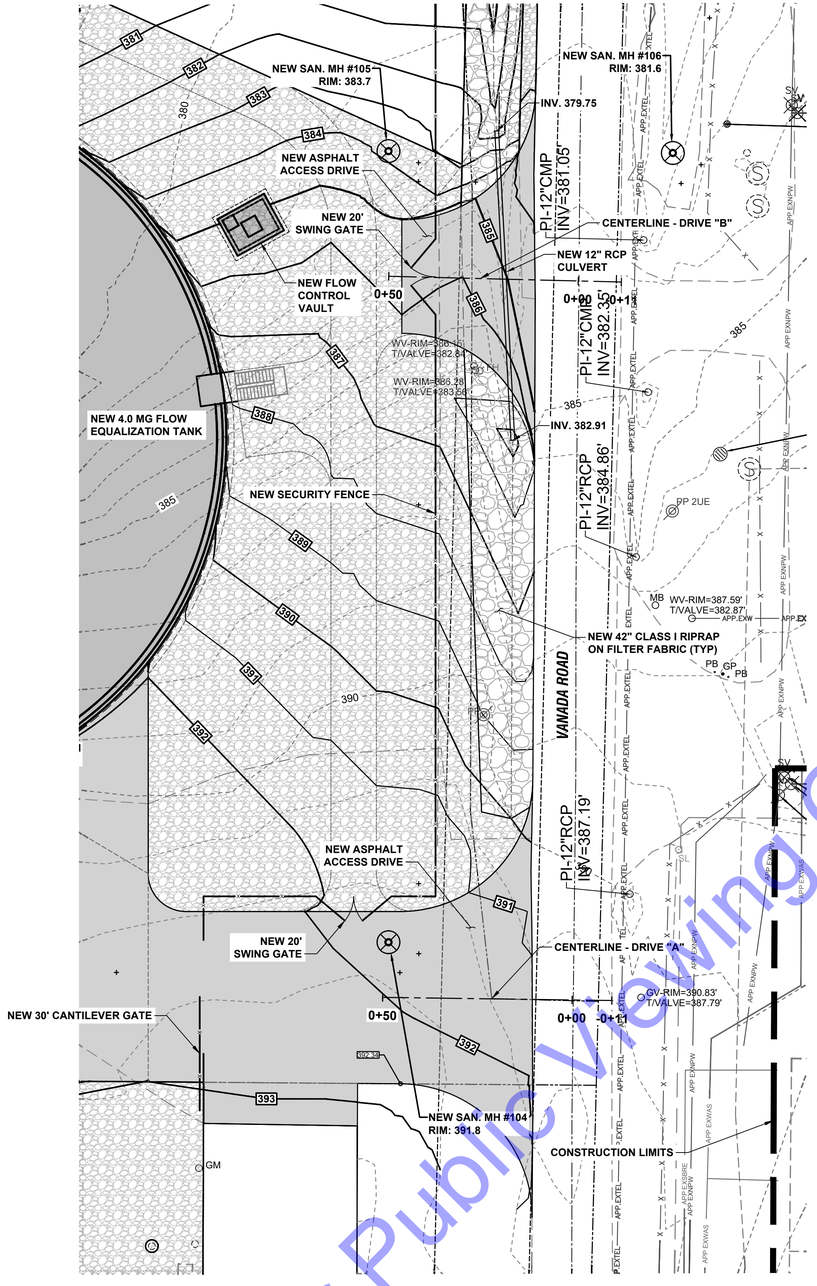

SITE DRIVE PLAN

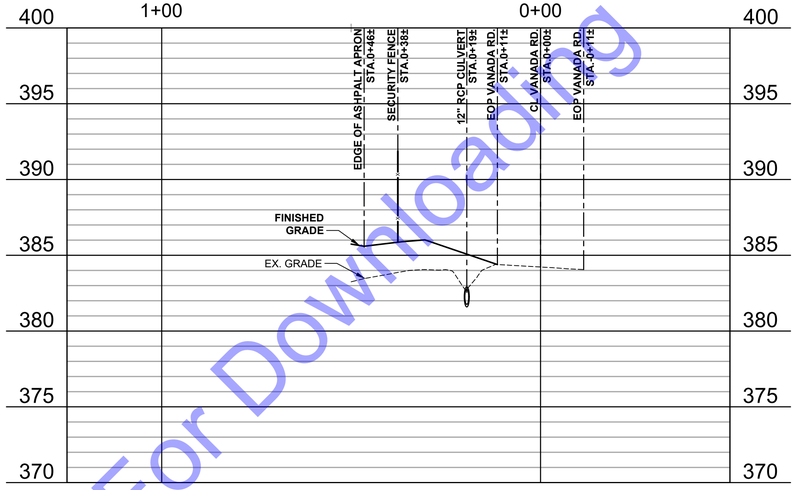

DRIVE "B" PROFILE

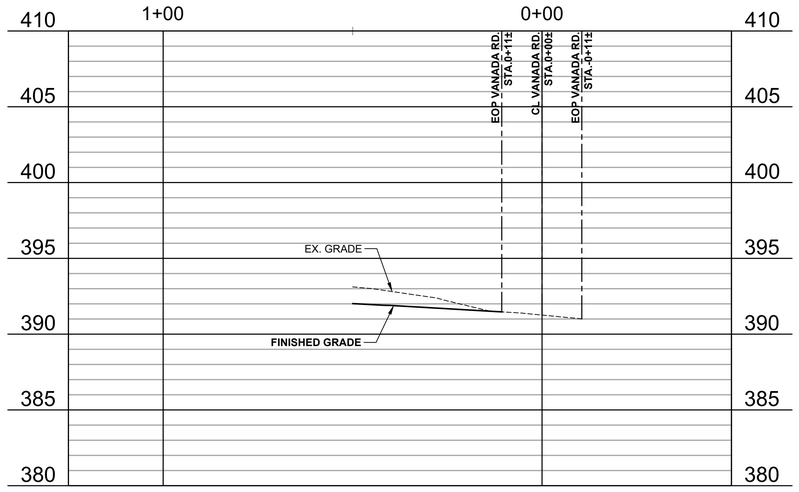

DRIVE "A" PROFILE

SHEET NOTES

1. CONTRACTOR SHALL SLOPE PAVEMENT TO DIRECT DRAINAGE AWAY FROM NEW AND EXISTING STRUCTURES AND TO NEW STORM DRAIN SYSTEM OR TO DITCH/CYPRESS CREEK.

HORIZONTAL SCALE: 1" = 20'-0"
0 10' 20' 40' 60'
VERTICAL SCALE: 1"=5'
5' 0

For Public Viewing Only-Not For Downloading

COMMONWEALTH ENGINEERS, INC.
A wealth of resources to master a common goal.
https://commonwealthengineers.com/

RUDOLPH J. NOLTICH
REGISTERED
No. PE19400077
INDIANA
PROFESSIONAL ENGINEER

Signature 10/03/2025 Date

TOWN OF NEWBURGH
WARRICK COUNTY, INDIANA

WASTEWATER TREATMENT
PLANT FLOW EQ BASIN

© 2025 BY COMMONWEALTH ENGINEERS, INC. ALL RIGHTS RESERVED. REPRODUCTION BY ANY METHOD, IN WHOLE OR IN PART WITHOUT PERMISSION IS PROHIBITED

Indiana 811 Know what's below. 811 before you dig. 1-800-382-5544 (ITS THE LAW)

No.	Submittal / Revision	By	Date

Designed By:	Drawn By:	Checked By:
DOF	DMJ	ETP
Issue Date: 10/03/25	Project No: S18005-041	Scale: AS SHOWN

SITE DRIVE PLAN AND PROFILES

Drawing No: **C-11**

Sheet: 24 OF 161

File: Z:\SHARED\IN CLIENTS M-Z\NEWBURGH\S18005 GN CALL SEWER ENG SVCS\041 WWTP FLOW EQ BASIN\06 CADA CURRENT FILES\1 DRAWINGS\05-EX SITE PLANS.DWG
Saved: 10/2/2025 1:44:25 PM Plotted: 10/2/2025 1:57:25 PM Current User: Drew Jenkins LastSavedBy: djenkins

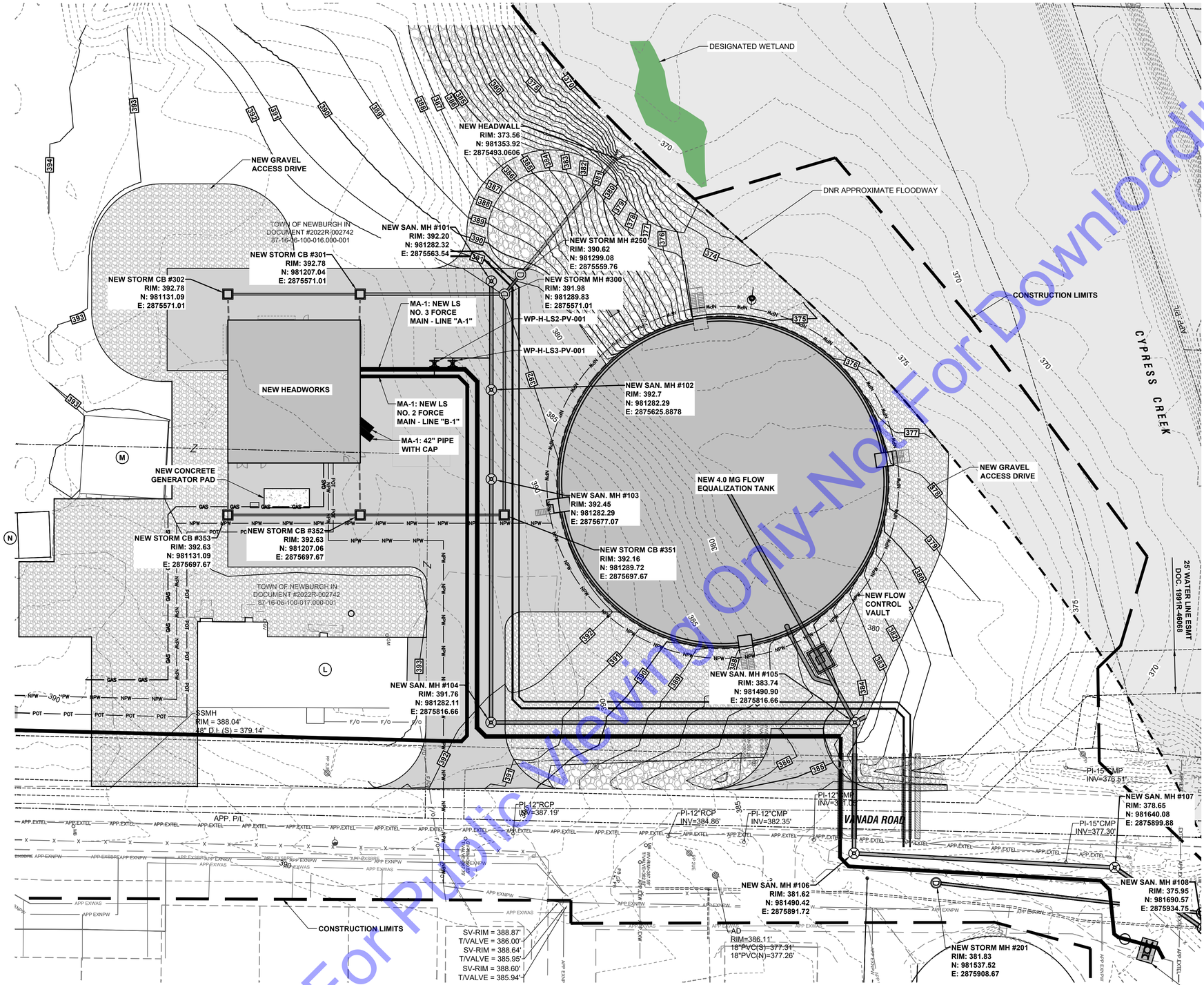

MANDATORY ALTERNATE NO. 1 PLAN

SCALE: 1"=30'-0"

0 30' 60'

#	EXISTING STRUCTURES
IDENTIFIER	DESCRIPTION
A	EX. LIFT STATION NO. 3 (PLANT INFLUENT LS)
B	EX. SLUDGE TREATMENT UNITS
C	EX. SLUDGE BLOWER BUILDING
D	EX. SLUDGE STORAGE TANK
E	EX. LAB / ADMINISTRATION TRAINING BUILDING
F	EX. SBR TANKS NO. 6, 7, AND 8
G	EX. HEADWORKS BUILDING
H	EX. SBR TANKS NO. 4 AND 5
I	EX. SBR TANKS 1, 2, AND 3
J	EX. EQUALIZATION TANK
K	EX. ULTRAVIOLET LIGHT DISINFECTION FACILITY
L	EX. STORAGE TO BE CONVERTED TO ADMINISTRATION
M	EX. STORAGE GARAGE
N	EX. HOUSE

SHEET NOTES

1. MANDATORY ALTERNATE 1 IS A DEDUCT. CHANGES TO WORK INCLUDE REMOVING THE HYDROGEN SULFIDE (H2S) REMOVAL FACILITY, EXTENSION OF LIFT STATION NO. 2 & NO. 3 FORCE MAINS INTO THE NEW HEADWORKS, CAPPING 42" PIPE ON OUTSIDE OF HEADWORKS BUILDING, INSTALLING CLAMP-ON ULTRSONIC FLOW METERS FOR LIFT STATION NO. 2 & NO. 3 THREE FEET FROM THE FLOOR WITHIN THE HEADWORKS, AND REMOVING ALL ANCILLARY PORTIONS OF WORK ASSOCIATED WITH THE H2S REMOVAL FACILITY. BALCONY ON NORTH SIDE OF HEADWORKS WITH FULL RAILING TO BE PROVIDED IF MA-1 IS SELECTED.

For Public Viewing Only-Not For Downloading

COMMONWEALTH ENGINEERS, INC.
A wealth of resources to master a common goal.
https://commonwealthengineers.com/

RUDOLPH J. NOVLICH
REGISTERED
No. PE19400077
INDIANA
PROFESSIONAL ENGINEER

Signature 10/03/2025 Date

© 2025 BY COMMONWEALTH ENGINEERS, INC. ALL RIGHTS RESERVED. REPRODUCTION OR ALTERATION OF THIS DRAWING IN PART WITHOUT PERMISSION IS PROHIBITED

Indiana 811 Know what's below. 811 before you dig. 1-800-382-5544 (ITS THE LAW)

No.	Submittal / Revision	By	Date

Designed By:	Drawn By:	Checked By:
DOF	DMJ	ETP
Issue Date:	Project No:	Scale:
10/03/25	S18005-041	AS SHOWN

TOWN OF NEWBURGH
WARRICK COUNTY, INDIANA
WASTEWATER TREATMENT PLANT FLOW EQ BASIN

MANDATORY ALTERNATE NO. 1 PLAN

Drawing No: **C-12**

Sheet: 25 OF 161

File: Z:\SHARED\IN CLIENTS M-Z\NEWBURGH\S18005 ON CALL SEWER ENG SVCS\041 WWTP FLOW EQ BASIN\06 CAD\A CURRENT FILES\ DRAWINGS\05-EX SITE PLANS.DWG
Saved: 10/2/2025 1:44:25 PM Plotted: 10/2/2025 1:57:36 PM Current User: Drew Jenkins LastSavedBy: djenkins

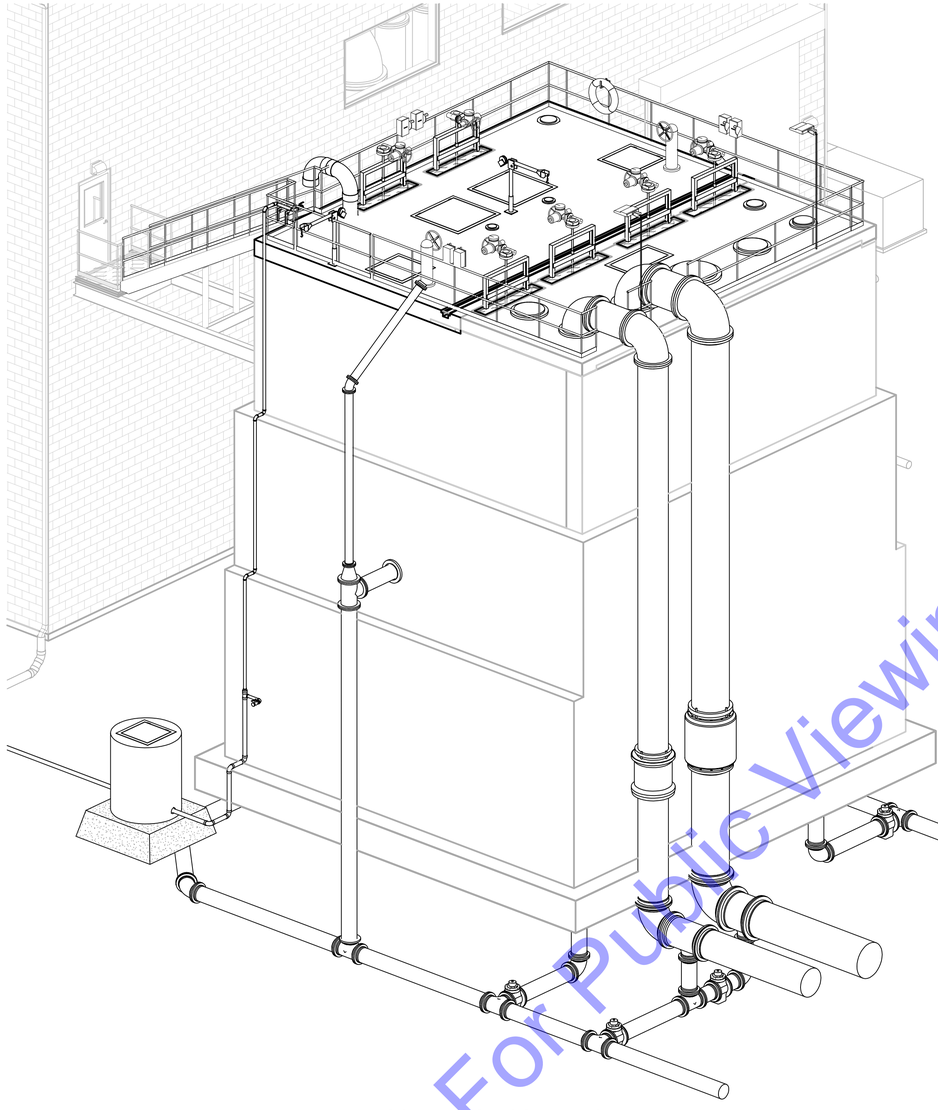

SOUTHEAST ISOMETRIC
SCALE: NOT TO SCALE

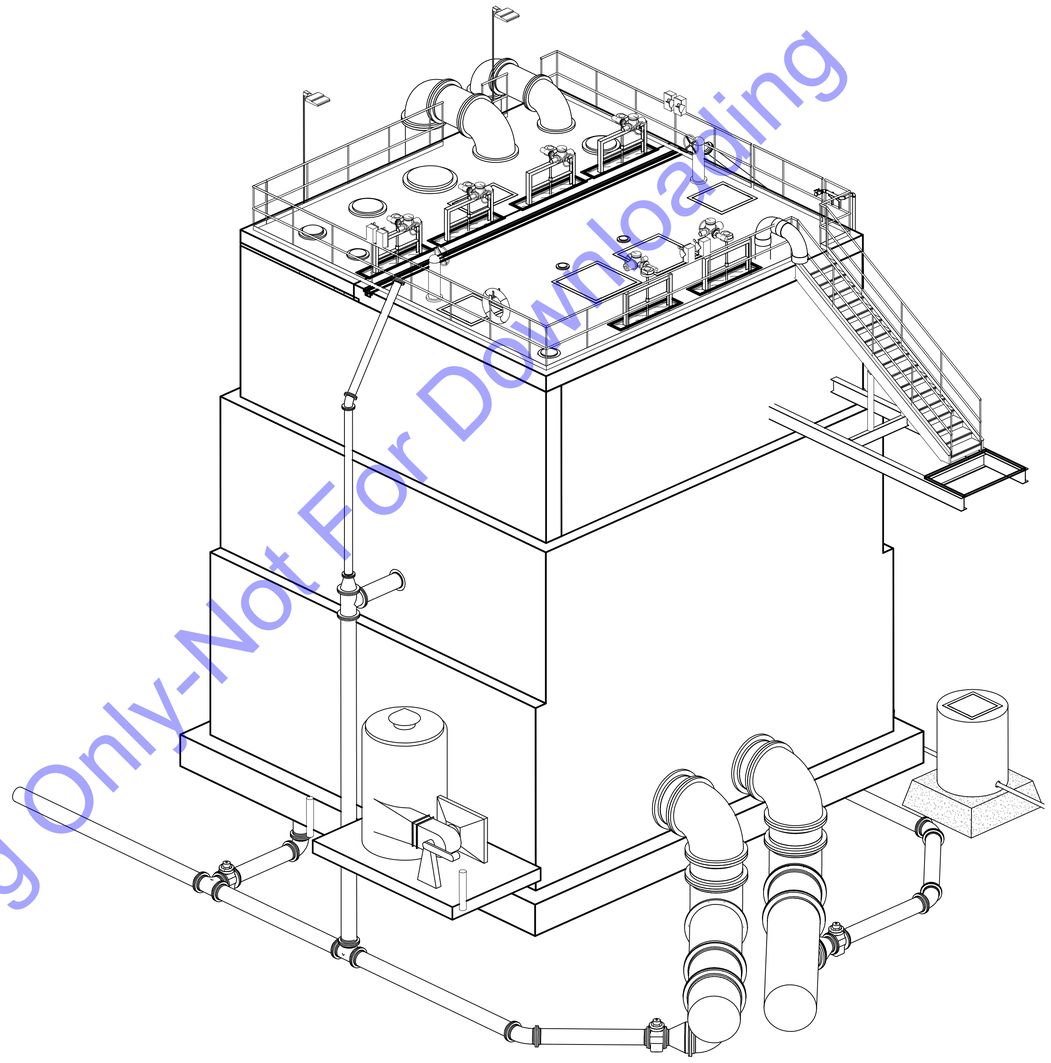

NORTHWEST ISOMETRIC
SCALE: NOT TO SCALE

SHEET NOTES:

1. FUTURE PIPING IS NOT SHOWN FOR VIEW CLARITY
2. EXTERIOR FORCE MAIN PIPING, PROCESS PIPING AND NON-POTABLE WATER PIPING SHALL BE INSULATED AND HEAT TRACED
3. INTERIOR OF STRUCTURE CONCRETE TO BE COATED PER WM 25.1

For Public Viewing Only-Not For Downloading

COMMONWEALTH ENGINEERS, INC.
A wealth of resources to master a country's goal
https://commonwealthengineers.com/
OFFICE LOCATIONS IN:
INDIANAPOLIS, IN (2)
EVANSVILLE, IN
FORT WAYNE, IN
CROWN POINT, IN
BOWLING GREEN, KY
SOUTH BEND, IN

RUDOLPH J. NOTICH
REGISTERED
19400077
STATE OF INDIANA
PROFESSIONAL ENGINEER

Signature 10/03/2025 Date

TOWN OF NEWBURGH
WARRICK COUNTY, INDIANA

WASTEWATER TREATMENT
PLANT FLOW EQ BASIN

© 2025 BY COMMONWEALTH ENGINEERS, INC. ALL RIGHTS RESERVED. REPRODUCTION BY ANY METHOD IN WHOLE OR IN PART WITHOUT PERMISSION IS PROHIBITED

Indiana 811 Know what's below. 811 before you dig.
1-800-382-5544 (ITS THE LAW)

No.	Submittal / Revision	By	Date

Designed By:	Drawn By:	Checked By:
RJN	ANR	DOF
Issue Date: 10/03/25	Project No: S18005-041	Scale: AS SHOWN

NEW H2S REMOVAL FACILITY ISOMETRICS

Drawing No:
D1-01
Sheet: 26 OF 161

Saved: 10/2/2025 2:33:14 PM Current Local File: Autodesk Docs://Newburgh New WWTP EQ and Headworks/NEW HEADWORKS INF STRUCTURE_v23.rvt

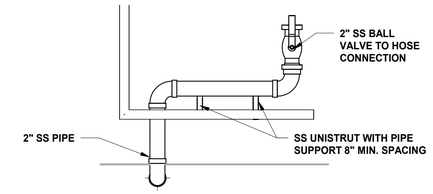

NEW 2" FLUSHING HOSE CONNECTION DETAIL

SCALE: NOT TO SCALE

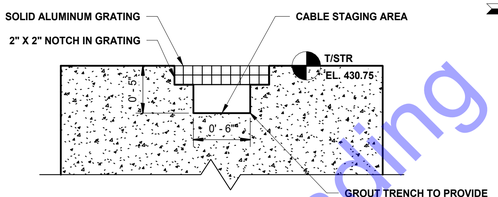

ELECTRICAL TRENCH

SCALE: NOT TO SCALE

SHEET NOTES:

1. EXTERIOR FORCE MAIN PIPING, PROCESS PIPING AND NON-POTABLE WATER PIPING TO BE INSULATED AND HEAT TRACED
2. INTERIOR OF STRUCTURE CONCRETE TO BE COATED PER WM 25.1 AND DS-03
3. KICK PLATES UNDER RAILING SHALL BE CUT TO FORM AND INSTALLED UNDER ALL THE INFLUENT PIPES. INTENT IS TO PROVIDE KICKPLATE MOUNTING CONTINUOUSLY ALONG THE EDGE.
4. FUTURE PIPES ENTERING THE H2S REMOVAL FACILITY SHALL RECEIVE A WALL PIPE AND CAP. ALL WALL PIPES AND CAPS GOING THROUGH THE ROOF SHALL BE COATED YELLOW.
5. NEW EXTERIOR PIPING SHALL BE DUCTILE IRON UNLESS OTHERWISE NOTED
6. MANDATORY ALTERNATE 2 - REPLACE ALL GALVANIZED STRUCTURAL STEEL ASSOCIATED WITH THE EXTERIOR STAIRS AND PLATFORM ASSEMBLIES WITH TYPE 316 STAINLESS STEEL

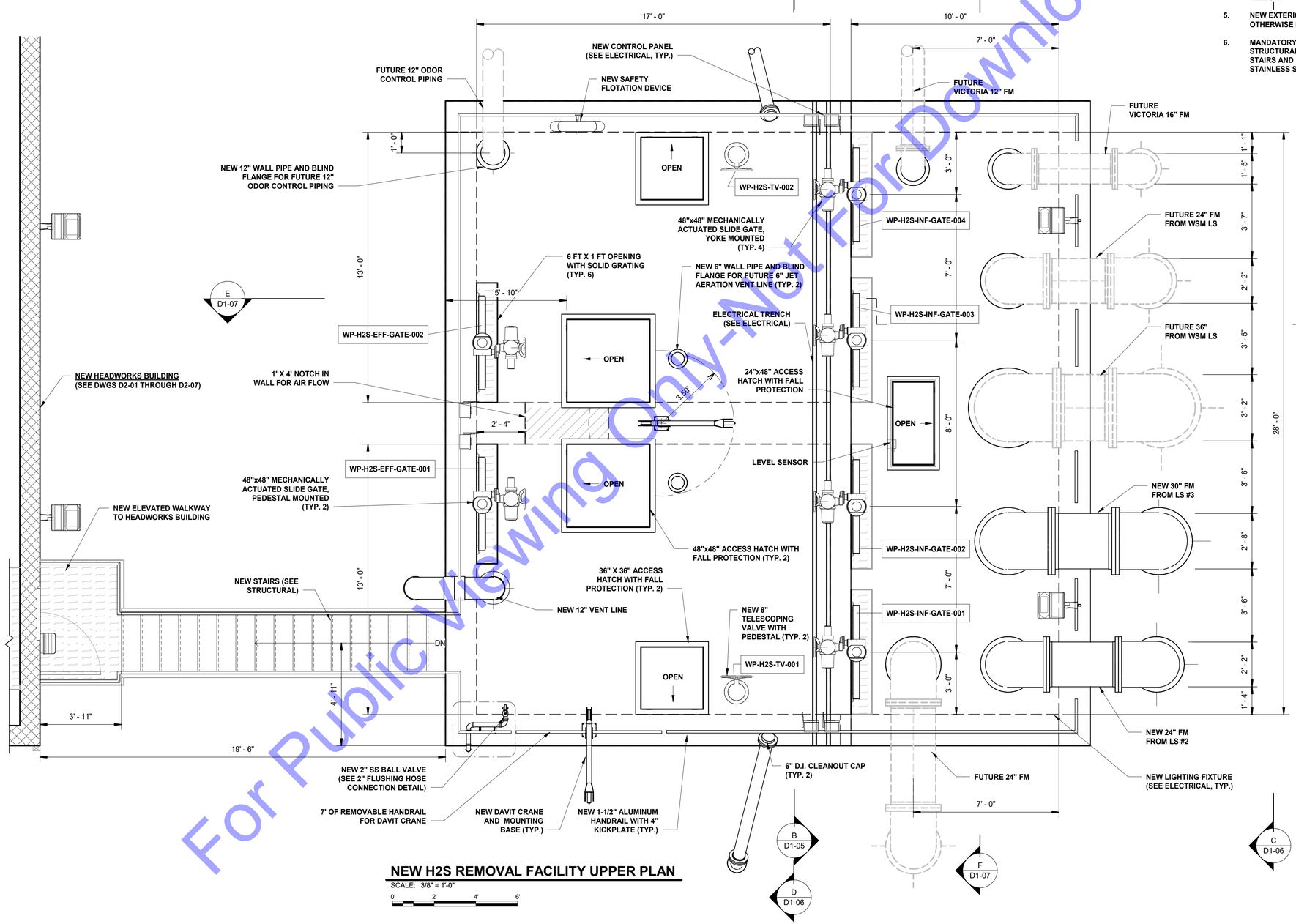

NEW H2S REMOVAL FACILITY UPPER PLAN

SCALE: 3/8" = 1'-0"

0' 2' 4' 6'

For Public Viewing Only-Not For Downloading

COMMONWEALTH ENGINEERS, INC.
A wealth of resources to master a country's goal
https://commonwealthengineers.com/
OFFICE LOCATIONS IN:
INDIANAPOLIS, IN (2)
EVANSVILLE, IN
FORT WAYNE, IN
CROWN POINT, IN
BOWLING GREEN, KY
SOUTH BEND, IN

RUDOLPH J. NOTICH
REGISTERED
19400077
STATE OF INDIANA
PROFESSIONAL ENGINEER

Signature 10/03/2025 Date

TOWN OF NEWBURGH
WARRICK COUNTY, INDIANA

WASTEWATER TREATMENT
PLANT FLOW EQ BASIN

© 2025 BY COMMONWEALTH ENGINEERS, INC. ALL RIGHTS RESERVED. DISTRIBUTION BY ANY METHOD IN WHOLE OR IN PART WITHOUT PERMISSION IS PROHIBITED

Indiana 811 Know what's below. 811 before you dig. 1-800-382-5544 (ITS THE LAW)

No.	Submittal / Revision	By	Date

Designed By:	Drawn By:	Checked By:
RJN	ANR	DDF
Issue Date: 10/03/25	Project No: S18005-041	Scale: AS SHOWN

NEW H2S REMOVAL FACILITY UPPER PLAN

Drawing No:

D1-02

Sheet: 27 OF 161

Saved: 10/2/2025 2:33:19 PM Current Local File: Autodesk Docs://Newburgh New WWTP EQ and Headworks/NEW HEADWORKS INF STRUCTURE_v23.rvt

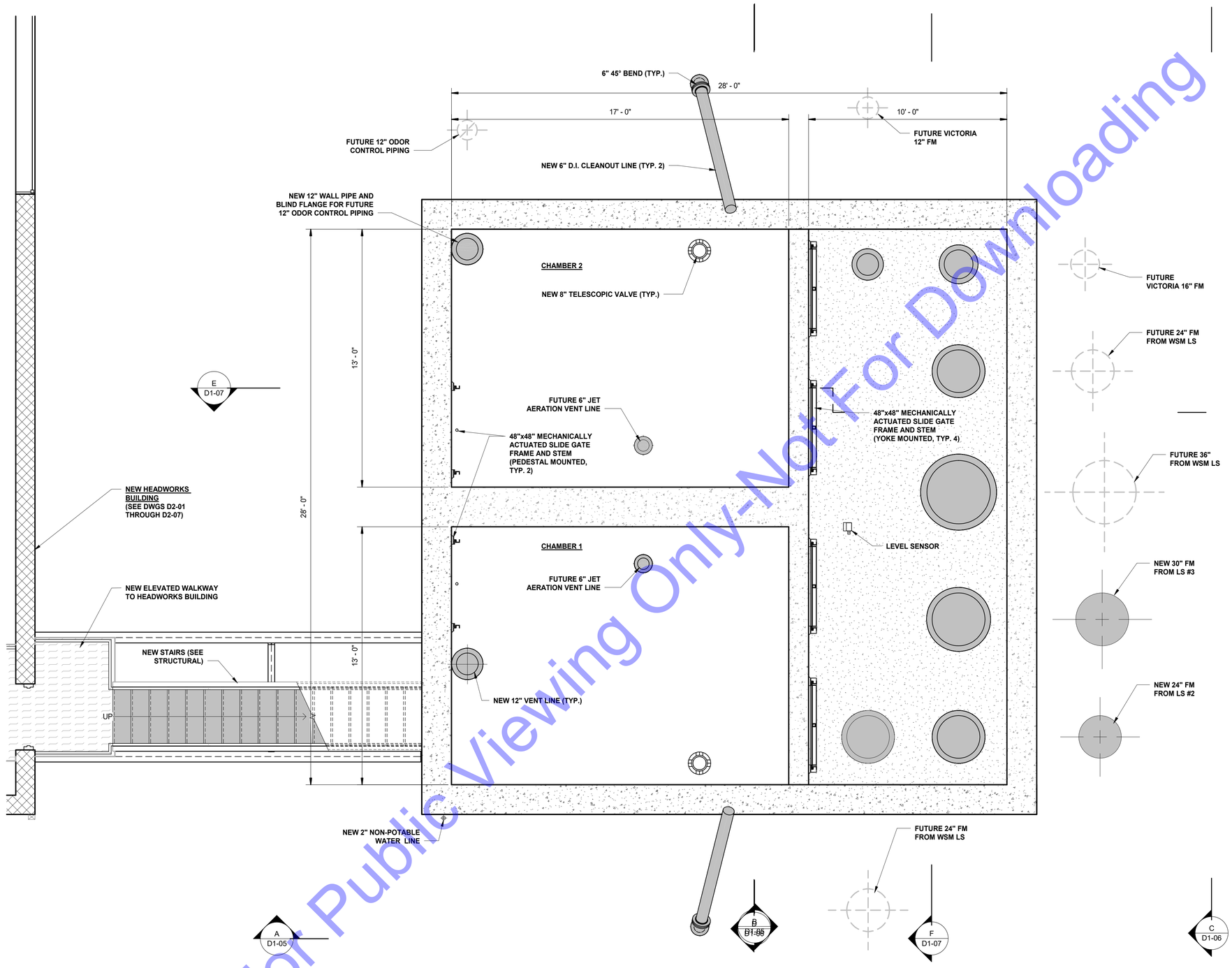

NEW H2S REMOVAL FACILITY MID PLAN

SCALE: 3/8" = 1'-0"

0' 2' 4' 6'

SHEET NOTES:

1. EXTERIOR FORCE MAIN PIPING, PROCESS PIPING AND NON-POTABLE WATER PIPING TO BE INSULATED AND HEAT TRACED
2. INTERIOR OF STRUCTURE CONCRETE TO BE COATED PER WM 25.1

For Public Viewing Only-Not For Downloading

COMMONWEALTH ENGINEERS, INC.
A wealth of resources to master a country's goal
https://commonwealthengineers.com/
OFFICE LOCATIONS IN:
INDIANAPOLIS, IN (2)
EVANSVILLE, IN
FORT WAYNE, IN
CROWN POINT, IN
BOWLING GREEN, KY
SOUTH BEND, IN

RUDOLPH J. NOTICH
REGISTERED
19400077
STATE OF INDIANA
PROFESSIONAL ENGINEER

Signature 10/03/2025 Date

TOWN OF NEWBURGH
WARRICK COUNTY, INDIANA

WASTEWATER TREATMENT
PLANT FLOW EQ BASIN

© 2025 BY COMMONWEALTH ENGINEERS, INC. ALL RIGHTS RESERVED. REPRODUCTION BY ANY METHOD IN WHOLE OR IN PART WITHOUT PERMISSION IS PROHIBITED

Indiana811 Know what's below. 811 before you dig. 1-800-382-5544 (ITS THE LAW)

No.	Submittal / Revision	By	Date

Designed By:	Drawn By:	Checked By:
RJN	ANR	DOF
Issue Date: 10/03/25	Project No: S18005-041	Scale: AS SHOWN

NEW H2S REMOVAL FACILITY MID PLAN

Drawing No: **D1-03**

Sheet: 28 OF 161

Saved: 10/2/2025 2:33:20 PM Current Local File: Autodesk Docs://Newburgh New WWTP EQ and Headworks/NEW HEADWORKS INF STRUCTURE_v23.rvt

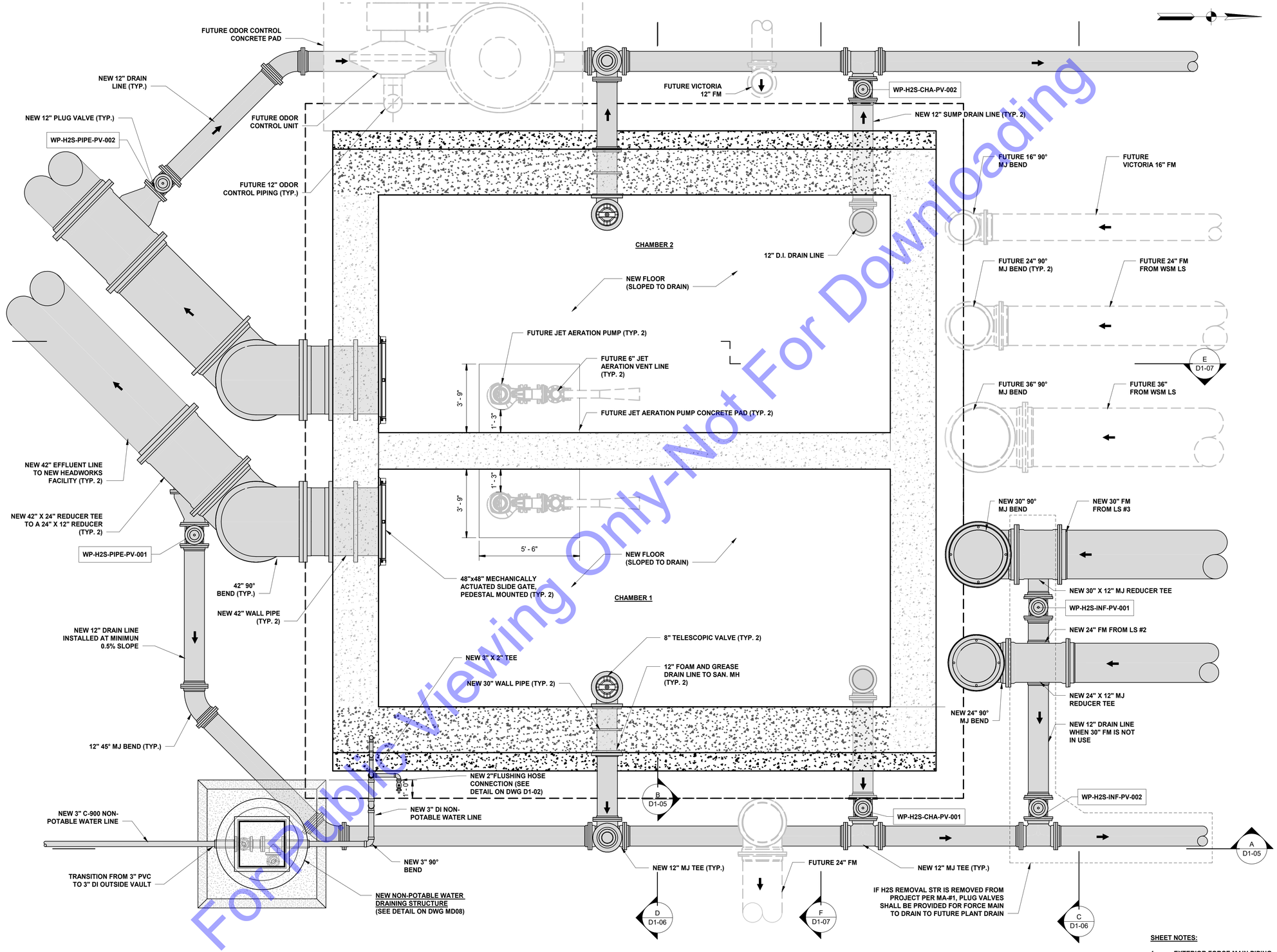

NEW H2S REMOVAL FACILITY LOWER PLAN VIEW

SCALE: 3/8" = 1'-0"

0' 2' 4' 6'

SHEET NOTES:

1. EXTERIOR FORCE MAIN PIPING, PROCESS PIPING AND NON-POTABLE WATER PIPING TO BE INSULATED AND HEAT TRACED
2. INTERIOR OF STRUCTURE CONCRETE TO BE COATED PER WM 25.1

For Public Viewing Only-Not For Downloading

COMMONWEALTH ENGINEERS, INC.
A wealth of resources to master a corporate goal
https://commonwealthengineers.com/
OFFICE LOCATIONS IN:
INDIANAPOLIS, IN (2)
EVANSVILLE, IN
FORT WAYNE, IN
CROWN POINT, IN
BOWLING GREEN, KY
SOUTH BEND, IN

RUDOLPH J. NOTICH REGISTERED 19400077 STATE OF INDIANA PROFESSIONAL ENGINEER

Signature 10/03/2025 Date

TOWN OF NEWBURGH
WARRICK COUNTY, INDIANA

WASTEWATER TREATMENT
PLANT FLOW EQ BASIN

© 2025 BY COMMONWEALTH ENGINEERS, INC. ALL RIGHTS RESERVED. REPRODUCTION BY ANY METHOD IN WHOLE OR IN PART WITHOUT PERMISSION IS PROHIBITED

Indiana 811 Know what's below. 811 before you dig. 1-800-382-5544 (ITS THE LAW)

No.	Submittal / Revision	By	Date

Designed By:	Drawn By:	Checked By:
RJN	ANR	DOF
Issue Date:	Project No:	Scale:
10/03/25	S18005-041	AS SHOWN

NEW H2S REMOVAL FACILITY LOWER PLAN

Drawing No:

D1-04

Sheet: 29 OF 161

Saved: 10/2/2025 2:33:35 PM Current Local File: Autodesk Docs://Newburgh New WWTP EQ and Headworks/NEW HEADWORKS INF STRUCTURE_v23.rvt

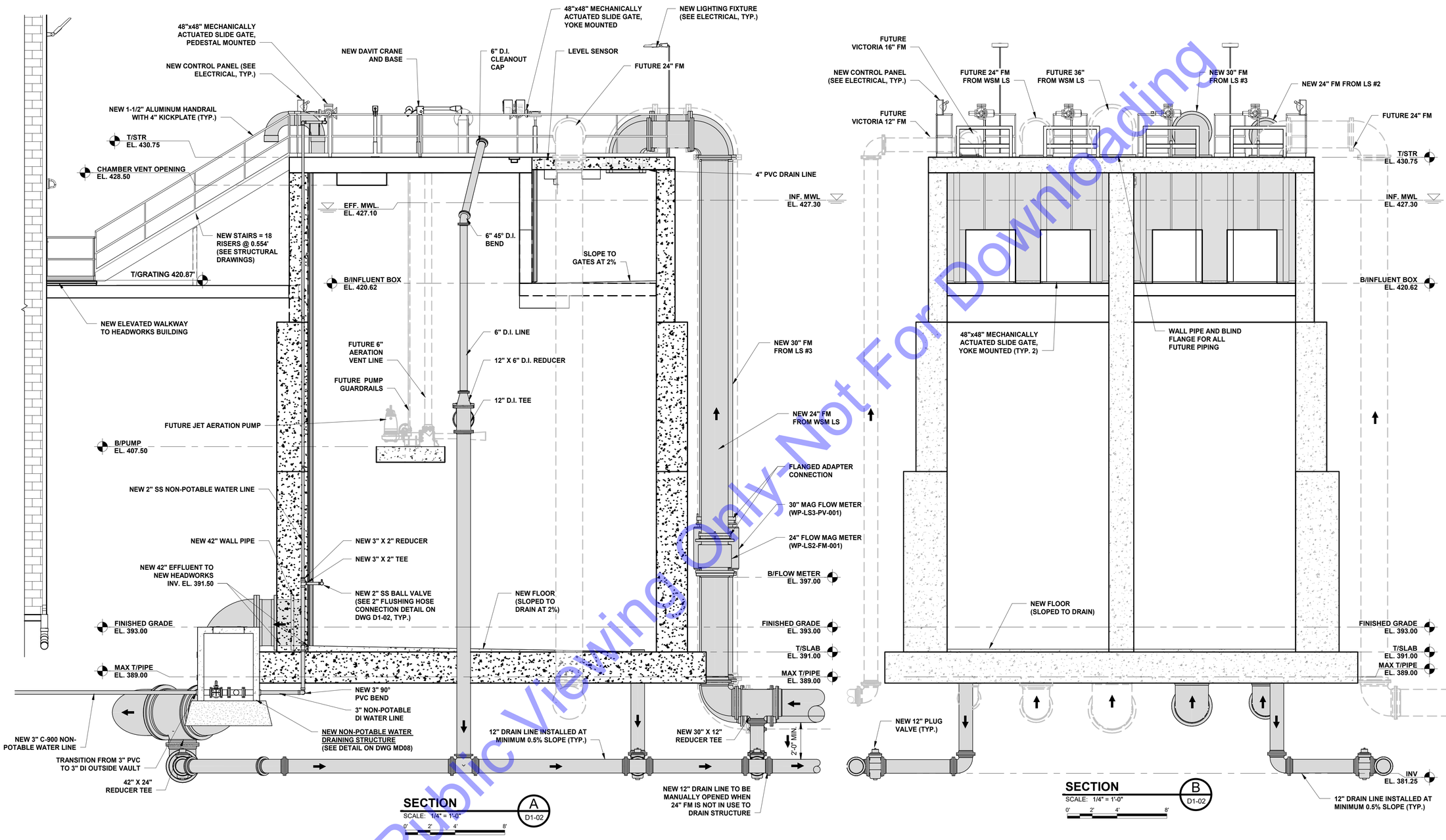

SHEET NOTES:

1. EXTERIOR FORCE MAIN PIPING, PROCESS PIPING AND NON-POTABLE WATER PIPING TO BE INSULATED AND HEAT TRACED
2. INTERIOR OF STRUCTURE CONCRETE TO BE COATED PER WM 25.1
3. KICKPLATES UNDER RAILING SHALL BE CUT TO FORM AND INSTALLED UNDER ALL THE INFLUENT PIPES. INTENT IS TO PROVIDE KICKPLATE MOUNTING CONTINUOUSLY ALONG THE EDGE.

For Public Viewing Only-Not For Downloading

COMMONWEALTH ENGINEERS, INC.
A wealth of resources to master a common goal
https://commonwealthengineers.com/
OFFICE LOCATIONS IN:
INDIANAPOLIS, IN (2)
EVANSVILLE, IN
FORT WAYNE, IN
CROWN POINT, IN
BOWLING GREEN, KY
SOUTH BEND, IN

RUDOLPH J. NOTICH REGISTERED 19400077 STATE OF INDIANA PROFESSIONAL ENGINEER

Signature 10/03/2025 Date

TOWN OF NEWBURGH
WARRICK COUNTY, INDIANA

WASTEWATER TREATMENT PLANT FLOW EQ BASIN

© 2026 BY COMMONWEALTH ENGINEERS, INC. ALL RIGHTS RESERVED. REPRODUCTION BY ANY METHOD IN WHOLE OR IN PART WITHOUT PERMISSION IS PROHIBITED

Indiana 811 Know what's below. Call before you dig. 1-800-382-5544 (IYS THE LAW)

No.	Submittal / Revision	By	Date

Designed By:	Drawn By:	Checked By:
RJN	ANR	DOF
Issue Date:	Project No:	Scale:
10/03/25	S18005-041	AS SHOWN

NEW H2S REMOVAL FACILITY SECTIONS I

Drawing No:

D1-05

Sheet: 30 OF 161

Saved: 10/2/2025 2:33:42 PM Current Local File: Autodesk Docs://Newburgh New WWTP EQ and Headworks/NEW HEADWORKS INF STRUCTURE_v23.rvt

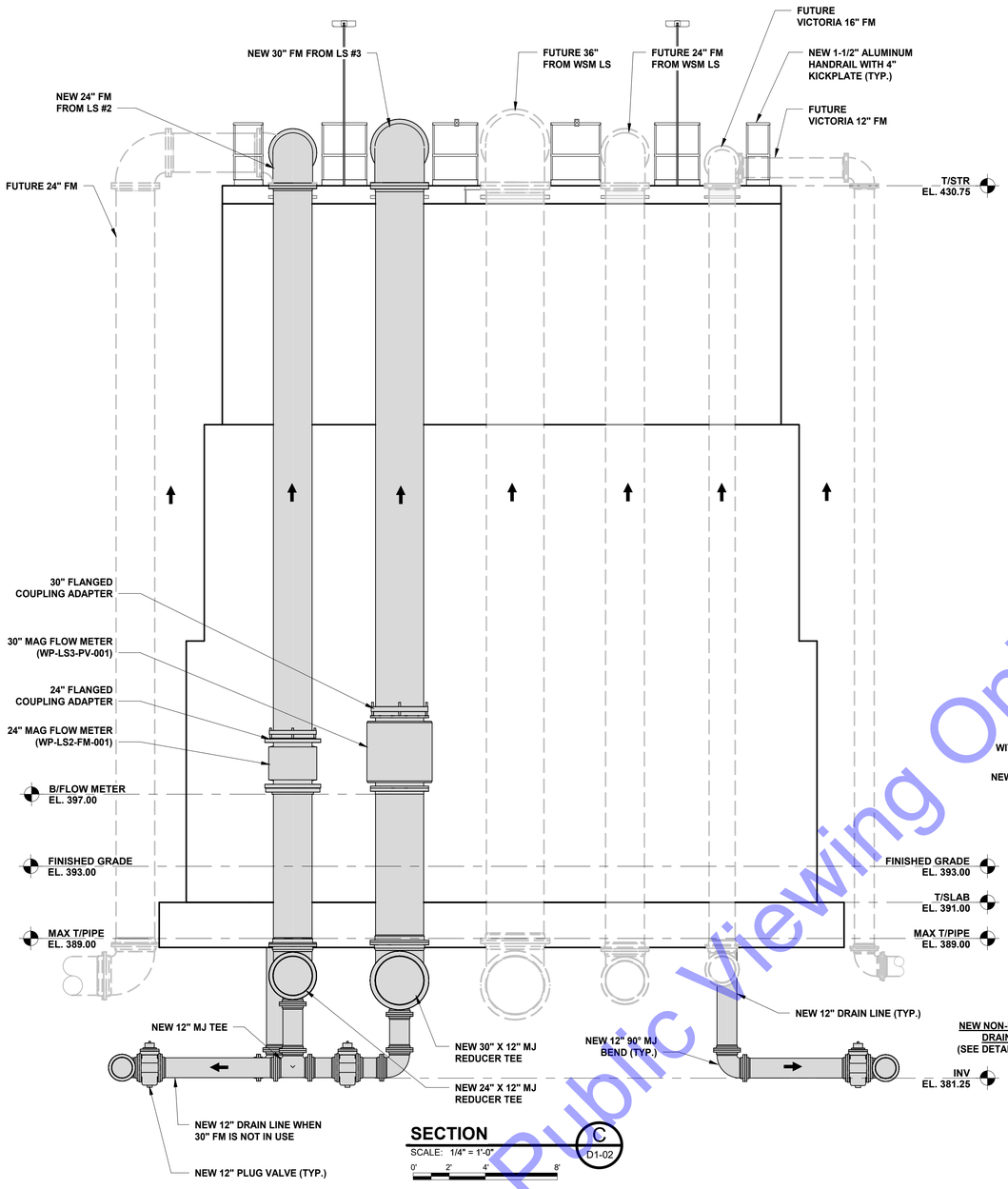

SECTION C (D1-02)
SCALE: 1/4" = 1'-0"
0' 2' 4' 8'

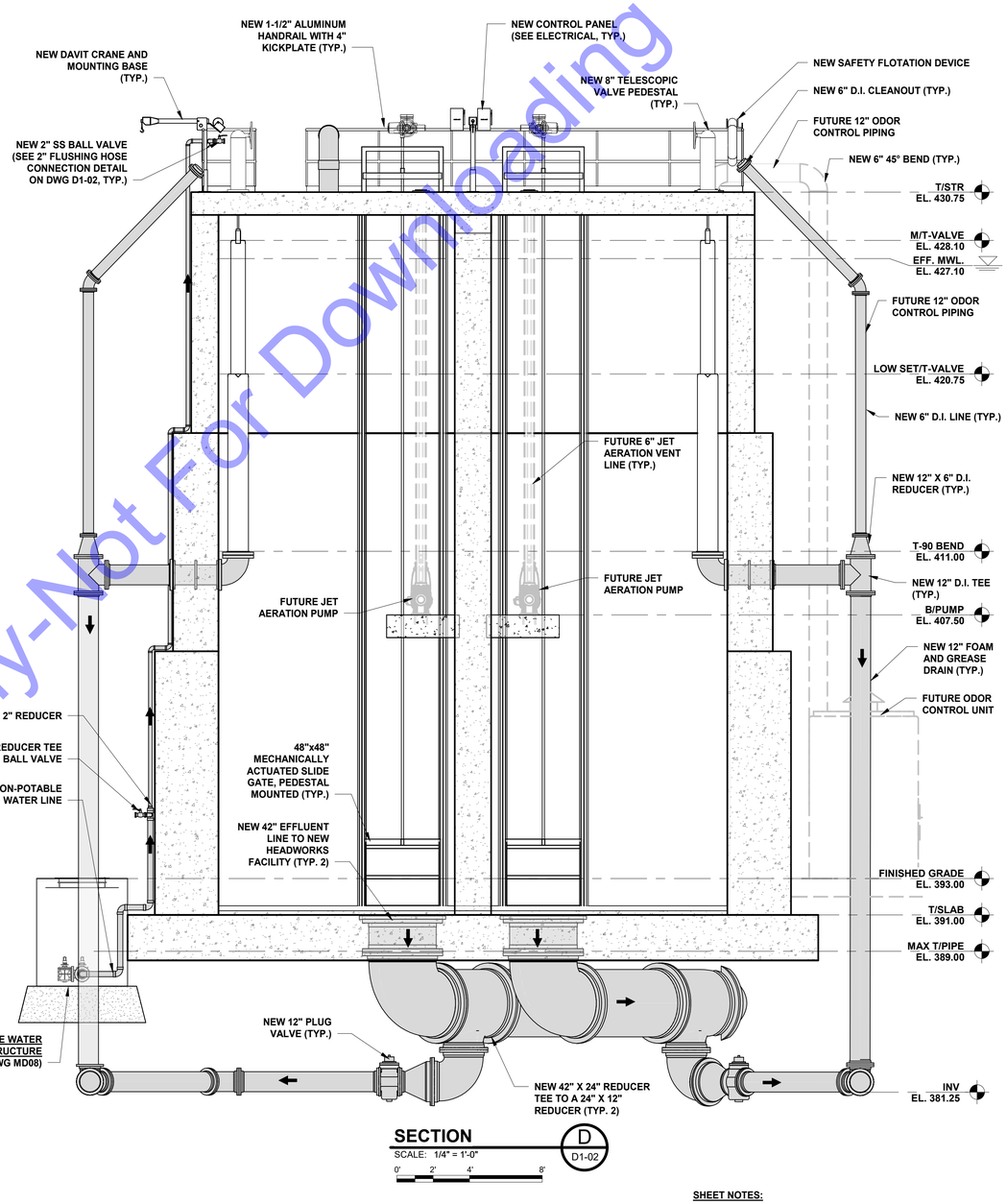

SECTION D (D1-02)
SCALE: 1/4" = 1'-0"
0' 2' 4' 8'

SHEET NOTES:

1. EXTERIOR FORCE MAIN PIPING, PROCESS PIPING AND NON-POTABLE WATER PIPING TO BE INSULATED AND HEAT TRACED
2. INTERIOR OF STRUCTURE CONCRETE TO BE COATED PER WM 25.1
3. KICK PLATES UNDER RAILING SHALL BE CUT TO FORM AND INSTALLED UNDER ALL THE INFLUENT PIPES. INTENT IS TO PROVIDE KICKPLATE MOUNTING CONTINUOUSLY ALONG THE EDGE.
4. CONTRACTOR SHALL INSTALL HANDRAIL ALONG EXTERIOR OF H2S REMOVAL FACILITY WHERE FUTURE PIPING IS SHOWN.

For Public Viewing Only-Not For Downloading

COMMONWEALTH ENGINEERS, INC.
A wealth of resources to master a corridor goal
https://commonwealthengineers.com/
OFFICE LOCATIONS IN:
INDIANAPOLIS, IN (2)
EVANSVILLE, IN
FORT WAYNE, IN
CROWN POINT, IN
BOWLING GREEN, KY
SOUTH BEND, IN

RUDOLPH J. NOTICH
REGISTERED
19400077
STATE OF INDIANA
PROFESSIONAL ENGINEER
Signature 10/03/2025 Date

TOWN OF NEWBURGH
WARRICK COUNTY, INDIANA

WASTEWATER TREATMENT
PLANT FLOW EQ BASIN

© 2025 BY COMMONWEALTH ENGINEERS, INC. - ALL RIGHTS RESERVED - REPRODUCTION BY ANY METHOD IN WHOLE OR IN PART WITHOUT PERMISSION IS PROHIBITED

Indiana811 Know what's below. 811 before you dig. 1-800-382-5544 (ITS THE LAW)

No.	Submittal / Revision	By	Date

Designed By:	Drawn By:	Checked By:
RJN	ANR	DOF
Issue Date:	Project No:	Scale:
10/03/25	S18005-041	AS SHOWN

NEW H2S REMOVAL FACILITY SECTIONS II

Drawing No:
D1-06
Sheet: 31 OF 161

Saved: 10/2/2025 2:33:52 PM Current Local File: Autodesk Docs://Newburgh New WWTP EQ and Headworks/NEW HEADWORKS INF STRUCTURE_v23.rvt

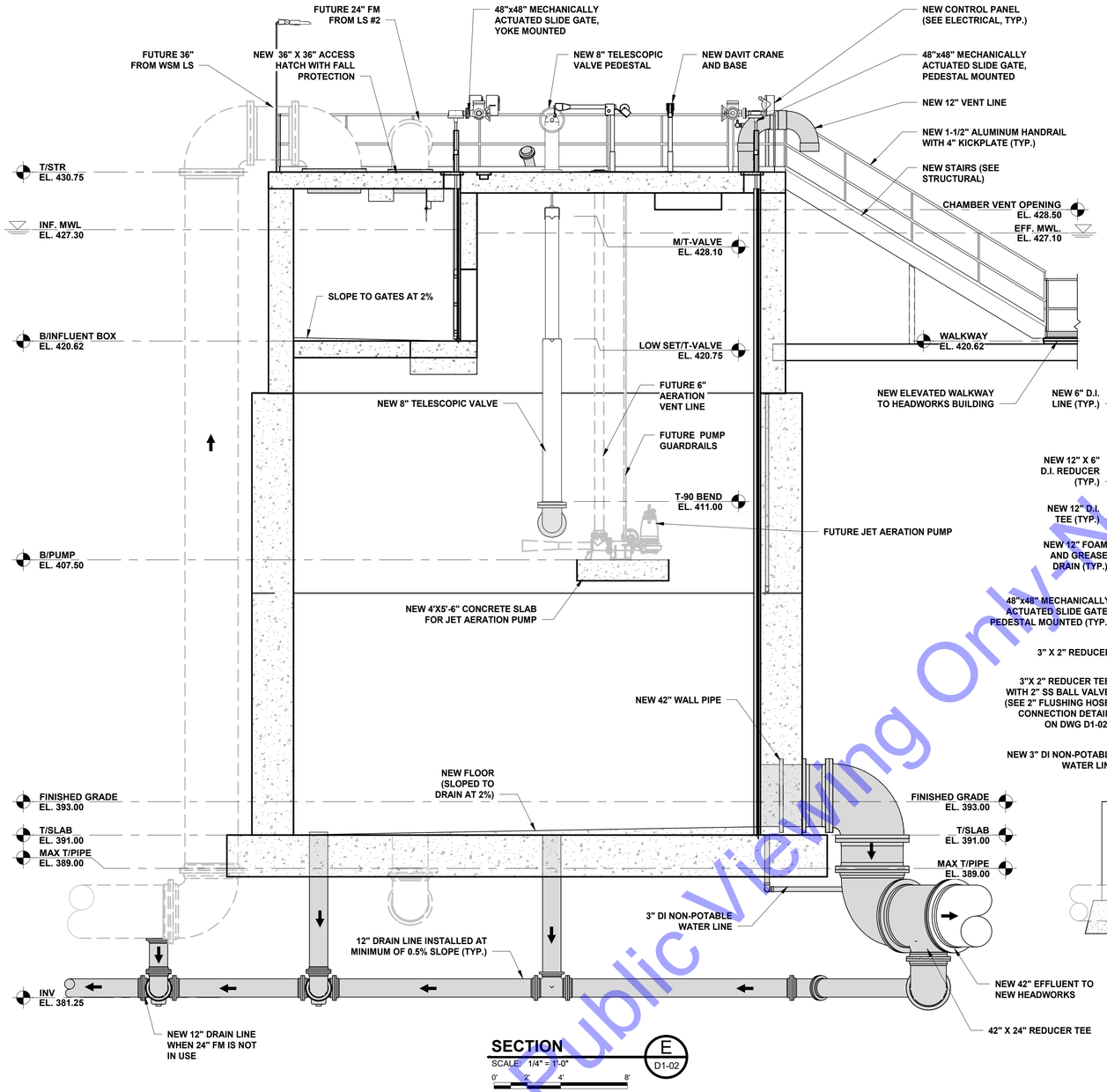

SECTION E — SCALE: 1/4" = 1'-0" — D1-02

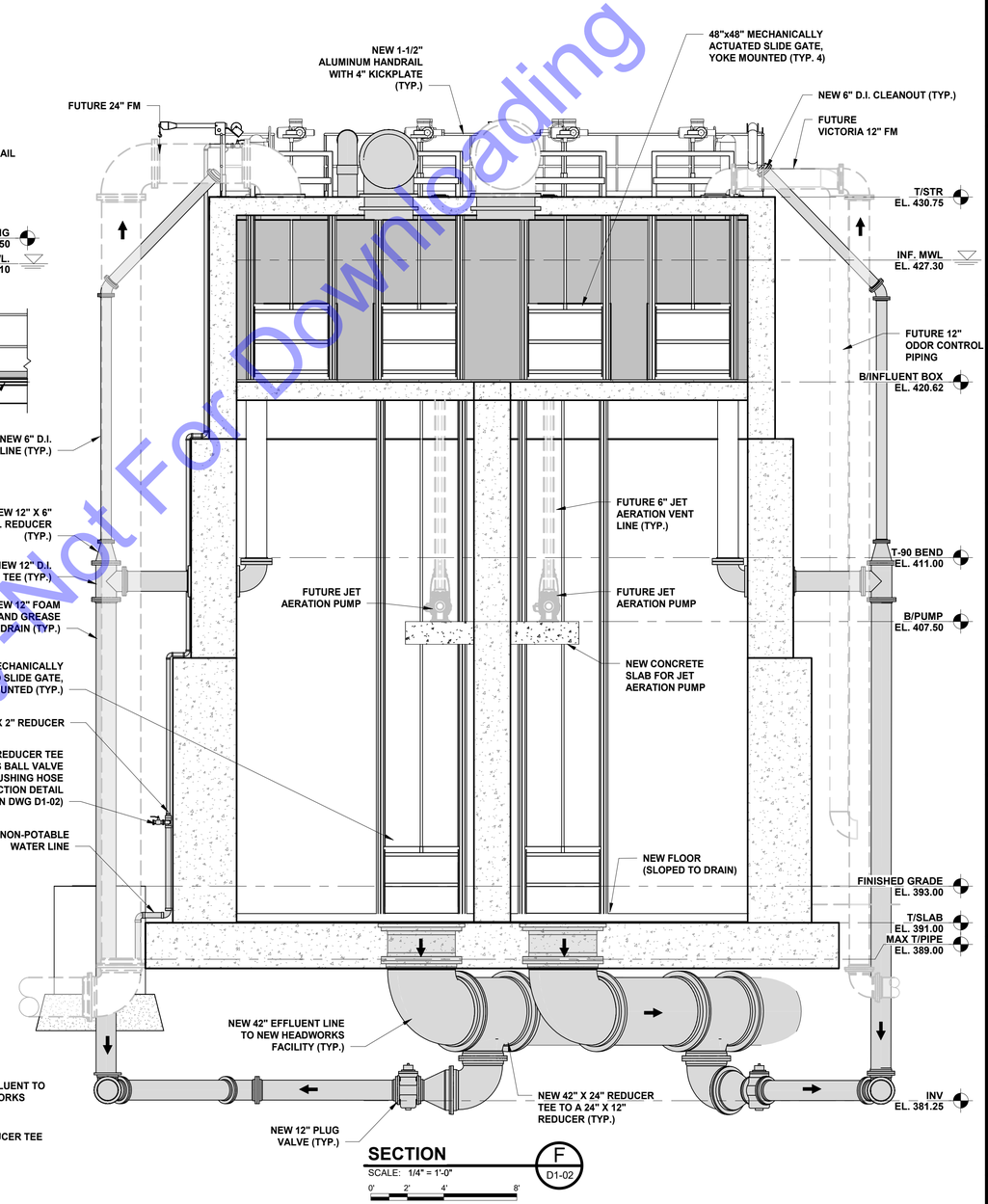

SECTION F — SCALE: 1/4" = 1'-0" — D1-02

SHEET NOTES:

1. EXTERIOR FORCE MAIN PIPING, PROCESS PIPING AND NON-POTABLE WATER PIPING TO BE INSULATED AND HEAT TRACED
2. INTERIOR OF STRUCTURE CONCRETE TO BE COATED PER WM 25.1
3. KICK PLATES UNDER RAILING SHALL BE CUT TO FORM AND INSTALLED UNDER ALL THE INFLUENT PIPES. INTENT IS TO PROVIDE KICK PLATE MOUNTING CONTINUOUSLY ALONG THE EDGE.

For Public Viewing Only-Not For Downloading

COMMONWEALTH ENGINEERS, INC.
A wealth of resources to master a complex goal
https://commonwealthengineers.com/
OFFICE LOCATIONS IN:
INDIANAPOLIS, IN (2)
EVANSVILLE, IN
FORT WAYNE, IN
CROWN POINT, IN
BOWLING GREEN, KY
SOUTH BEND, IN

RUDOLPH J. NOTICH REGISTERED 19400077 STATE OF INDIANA PROFESSIONAL ENGINEER
Signature 10/03/2025 Date

TOWN OF NEWBURGH
WARRICK COUNTY, INDIANA

WASTEWATER TREATMENT PLANT FLOW EQ BASIN

© 2025 BY COMMONWEALTH ENGINEERS, INC. ALL RIGHTS RESERVED. REPRODUCTION BY ANY METHOD IN WHOLE OR IN PART WITHOUT PERMISSION IS PROHIBITED

Indiana 811 Know what's below. 811 before you dig. 1-800-382-5544 (ITS THE LAW)

No.	Submittal / Revision	By	Date

Designed By:	Drawn By:	Checked By:
RJN	ANR	DOF
Issue Date:	Project No:	Scale:
10/03/25	S18005-041	AS SHOWN

NEW H2S REMOVAL FACILITY SECTIONS III

Drawing No: **D1-07**

Sheet: 32 OF 161

Saved: 10/2/2025 2:34:00 PM Current Local File: ...Autodesk Docs://Newburgh New WWTP EQ and Headworks/NEW HEADWORKS INF STRUCTURE_v23.rvt

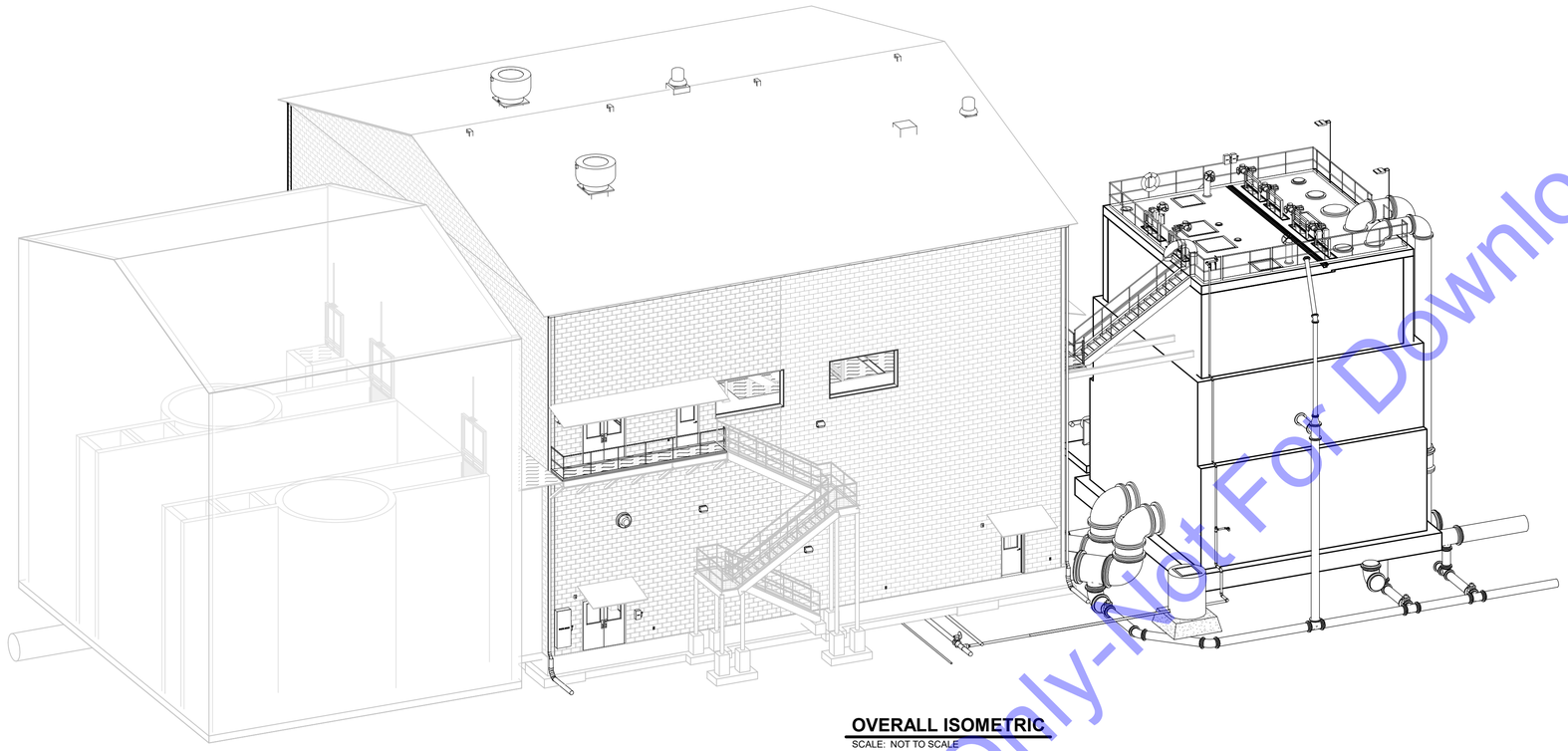

OVERALL ISOMETRIC
SCALE: NOT TO SCALE

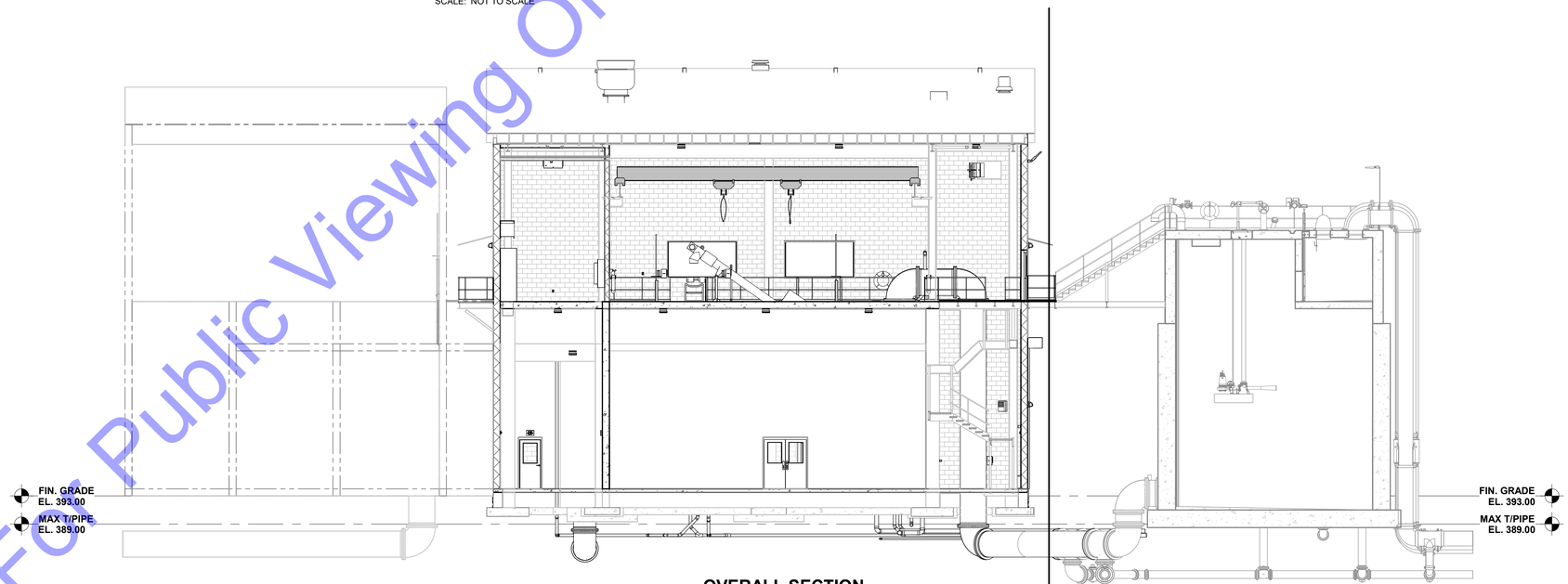

OVERALL SECTION
SCALE: NOT TO SCALE

RETAINED WITHIN BASE BID OF THE PROJECT

MANDATORY ALTERNATE 1 REMOVES THE HYDROGEN SULFIDE STRUCTURE FROM THE PROJECT

For Public Viewing Only-Not For Downloading

COMMONWEALTH ENGINEERS, INC.
A wealth of resources to master a country's goal
https://commonwealthengineers.com/
OFFICE LOCATIONS IN:
INDIANAPOLIS, IN (2)
EVANSVILLE, IN
FORT WAYNE, IN
CROWN POINT, IN
BOWLING GREEN, KY
SOUTH BEND, IN

RUDOLPH J. NOTICH
REGISTERED
19400077
STATE OF INDIANA
PROFESSIONAL ENGINEER

Signature 10/03/2025 Date

TOWN OF NEWBURGH
WARRICK COUNTY, INDIANA

WASTEWATER TREATMENT
PLANT FLOW EQ BASIN

© 2024 BY COMMONWEALTH ENGINEERS, INC. ALL RIGHTS RESERVED. REPRODUCTION BY ANY METHOD IN WHOLE OR IN PART WITHOUT PERMISSION IS PROHIBITED

Indiana 811 Know what's below. 811 before you dig.
1-800-382-5544
(ITS THE LAW)

No.	Submittal / Revision	By	Date

Designed By:	Drawn By:	Checked By:
RJN	ANR	DOF
Issue Date:	Project No:	Scale:
10/03/25	S18005-41	AS SHOWN

H2S REMOVAL FACILITY TO HEAWORKS ISOMETRIC AND SECTION

Drawing No:
D1-08
Sheet: 33 OF 161

Saved: 10/2/2025 2:29:20 PM Current Local File: Autodesk Docs://Newburgh New WWTP EQ and Headworks/Newburgh Headworks V 23.rvt

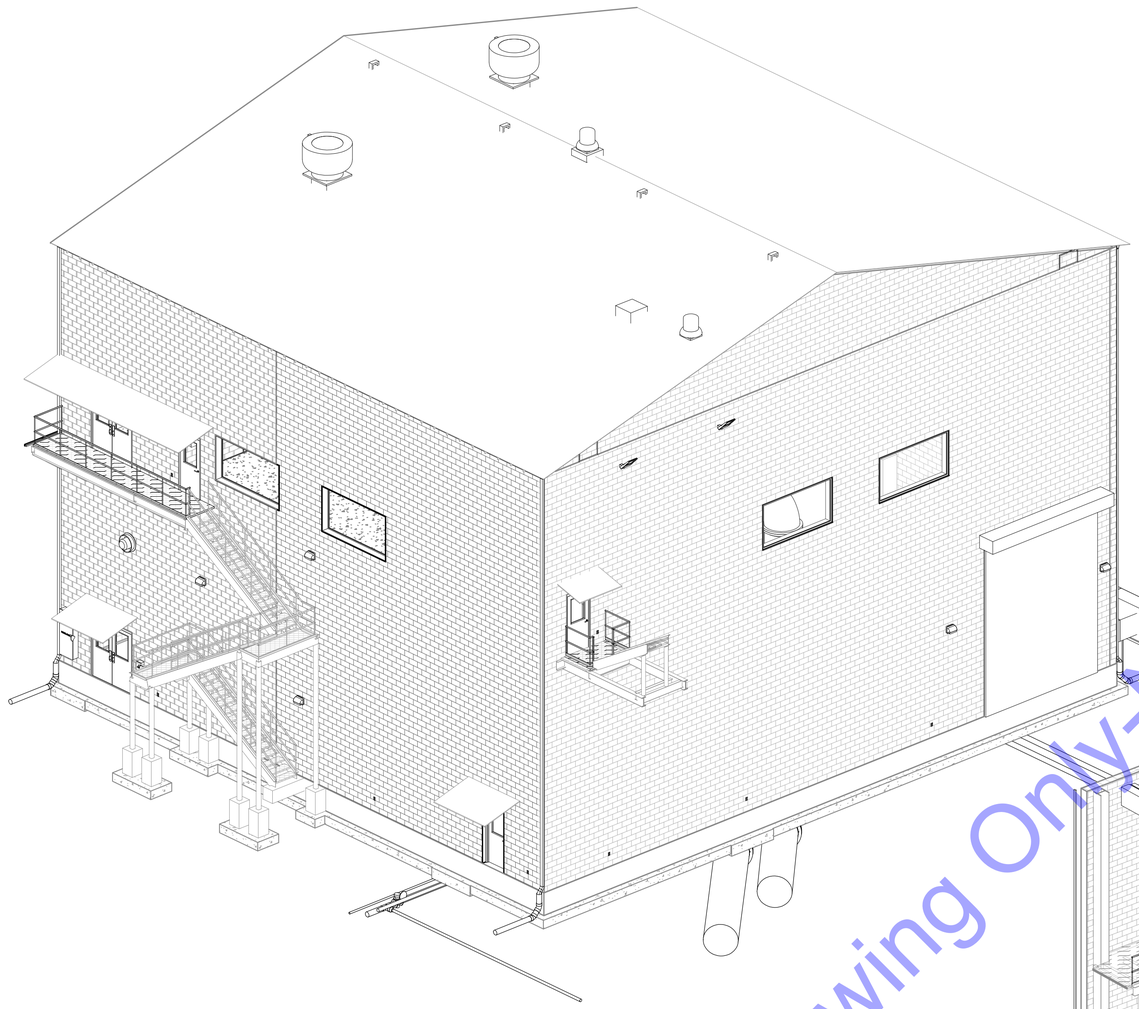

NEW HEADWORKS FACILITY ISOMETRIC

SCALE: NOT TO SCALE

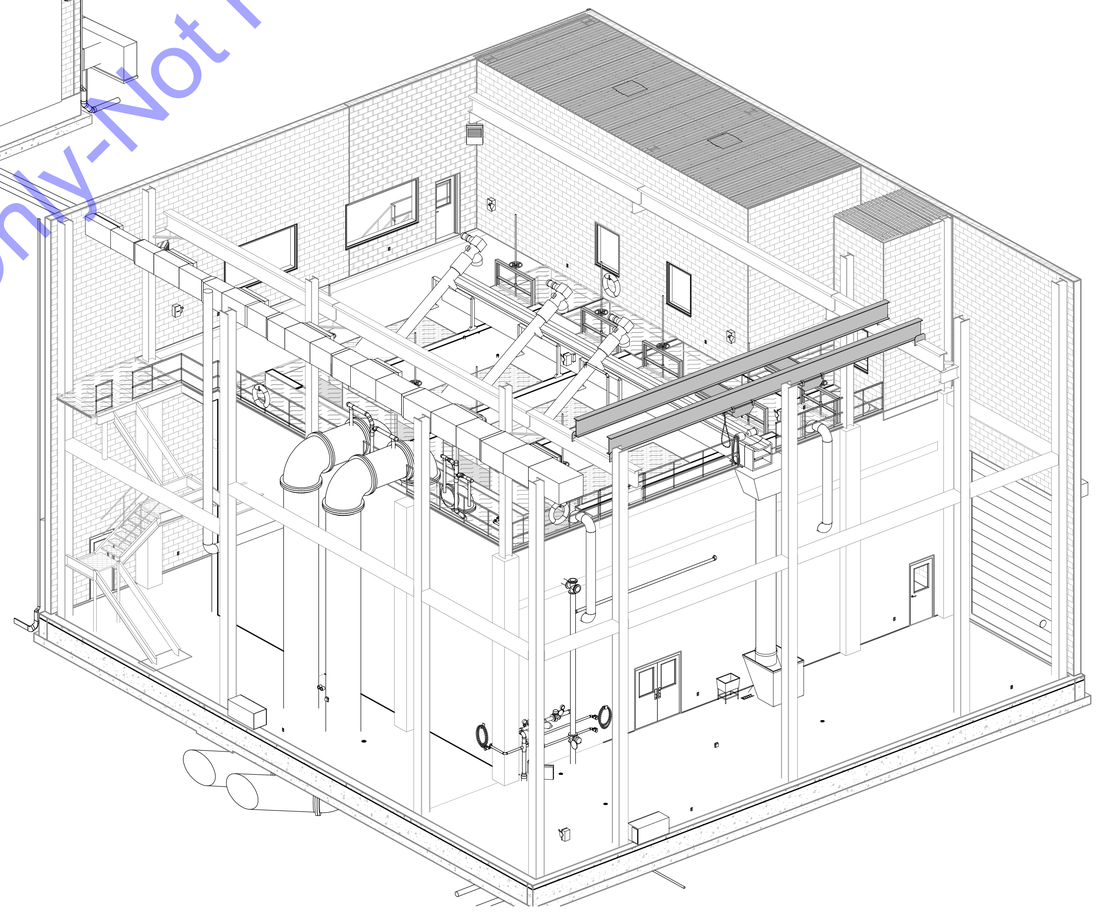

NEW HEADWORKS FACILITY INSIDE ISOMETRIC

SCALE: NOT TO SCALE

For Public Viewing Only-Not For Downloading

COMMONWEALTH ENGINEERS, INC.
A wealth of resources to master a country's goal
https://commonwealthengineers.com/
OFFICE LOCATIONS IN:
INDIANAPOLIS, IN (2)
EVANSVILLE, IN
FORT WAYNE, IN
CROWN POINT, IN
BOWLING GREEN, KY
SOUTH BEND, IN

RUDOLPH J. NOTICH
REGISTERED
19400077
STATE OF INDIANA
PROFESSIONAL ENGINEER

Signature: Rudolph J Notich — Date: 10/03/2025

TOWN OF NEWBURGH
WARRICK COUNTY, INDIANA

WASTEWATER TREATMENT
PLANT FLOW EQ BASIN

© 2024 BY COMMONWEALTH ENGINEERS, INC. ALL RIGHTS RESERVED. REPRODUCTION BY ANY METHOD IN WHOLE OR IN PART WITHOUT PERMISSION IS PROHIBITED

Indiana 811 Know what's below. 811 before you dig.
1-800-382-5544 (IT'S THE LAW)

No.	Submittal / Revision	By	Date

Designed By:	Drawn By:	Checked By:
RJN	ANR	DOF
Issue Date:	Project No:	Scale:
10/03/25	S18005-41	AS SHOWN

NEW HEADWORKS ISOMETRIC

Drawing No:

D2-01

Sheet: 34 OF 161

Saved: 10/2/2025 2:29:30 PM Current Local File: Autodesk Docs://Newburgh New WWTP EQ and Headworks/Newburgh Headworks V 23.rvt

SHEET NOTES:

1. ABOVE GRADE WATER PIPING WITHIN HEADWORKS IS STAINLESS STEEL
2. BELOW GRADE WATER PIPING IS PVC C-900
3. CASING PIPE IS REQUIRED FOR PIPING BURIED LESS THAN 2' FROM THE BOTTOM OF THE FOUNDATION. REFER TO THE STRUCTURAL DRAWINGS.
4. NEW FORCE MAIN AND PROCESS PIPING INSIDE THE BUILDING SHALL BE DUCTILE IRON OR PVC C-900 UNLESS OTHERWISE NOTED.
5. MANDATORY ALTERNATE 2 - REPLACE ALL GALVANIZED STRUCTURAL STEEL ASSOCIATED WITH THE EXTERIOR STAIRS AND PLATFORM ASSEMBLIES, AS WELL AS THE PLATFORMS SPANNING THE ELEVATED CONCRETE CHANNELS WITHIN THE INTERIOR OF THE HEADWORKS BUILDING, WITH TYPE 316 STAINLESS STEEL

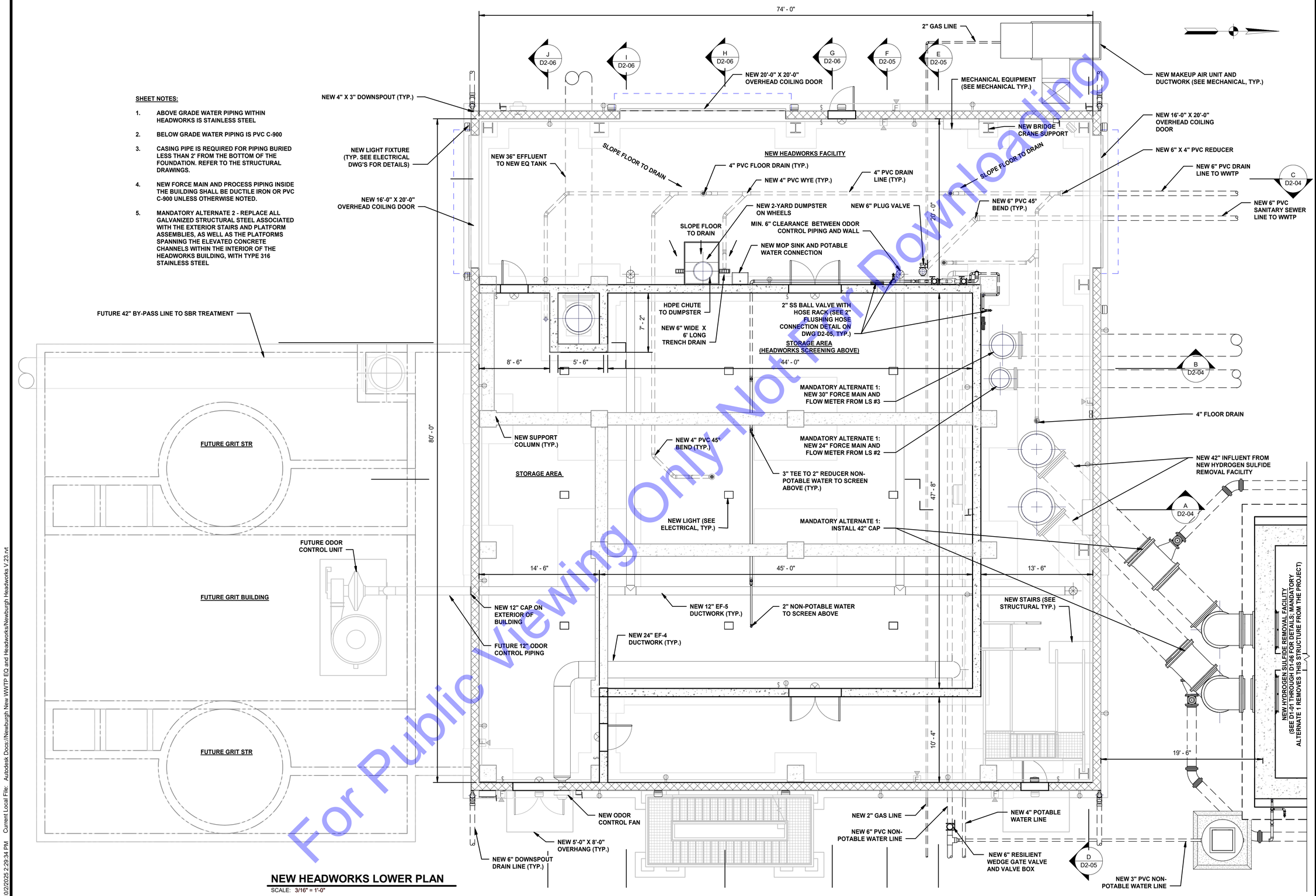

NEW HEADWORKS LOWER PLAN

SCALE: 3/16" = 1'-0"

0' 4' 8' 12'

For Public Viewing Only-Not For Downloading

COMMONWEALTH ENGINEERS, INC.
A wealth of resources to master a country's goal
https://commonwealthengineers.com/
OFFICE LOCATIONS IN:
INDIANAPOLIS, IN (2)
EVANSVILLE, IN
FORT WAYNE, IN
CROWN POINT, IN
BOWLING GREEN, KY
SOUTH BEND, IN

RUDOLPH J. NOTICH REGISTERED 19400077 STATE OF INDIANA PROFESSIONAL ENGINEER

Signature 10/03/2025 Date

TOWN OF NEWBURGH
WARRICK COUNTY, INDIANA

WASTEWATER TREATMENT
PLANT FLOW EQ BASIN

© 2024 BY COMMONWEALTH ENGINEERS, INC. ALL RIGHTS RESERVED. REPRODUCTION BY ANY METHOD IN WHOLE OR IN PART WITHOUT PERMISSION IS PROHIBITED

Indiana 811 Know what's below. 811 before you dig. 1-800-382-5544 (ITS THE LAW)

No.	Submittal / Revision	By	Date

Designed By:	Drawn By:	Checked By:
RJN	ANR	DOF
Issue Date:	Project No:	Scale:
10/03/25	S18005-41	AS SHOWN

NEW HEADWORKS LOWER PLAN

Drawing No: **D2-02**

Sheet: 35 OF 161

Saved: 10/2/2025 2:29:34 PM Current Local File: Autodesk Docs://Newburgh New WWTP EQ and Headworks/Newburgh Headworks V.23.rvt

GENERAL NOTES:

1. SOLID GRATING SHALL BE CUT OR FORMED AROUND THE SCREEN AND PIPES WITHIN CHANNEL IN ORDER TO SEAL THE CHANNEL MAXIMALLY
2. LIGHTING NOT SHOWN FOR VIEW CLARITY. SEE ELECTRICAL SHEETS FOR LIGHTING DETAILS
3. SAMPLER LINE TO BE STAINLESS STEEL PIPE, INSTALLED AT 45° TO 60° ANGLE. INTAKE TO BE POSITIONED IN THE MIDDLE OF THE CHANNEL, 6" FROM THE BOTTOM OF CHANNEL.
4. KICK PLATES UNDER RAILING SHALL BE CUT TO FORM AND INSTALLED UNDER ALL THE INFLUENT PIPES. INTENT IS TO PROVIDE KICKPLATE MOUNTING CONTINUOUSLY ALONG THE EDGE.
5. PRIOR TO ORDERING MATERIALS, CONTRACTOR SHALL VERIFY BRIDGE CRANE FITS WITHIN REQUIRED ELEVATIONS AND FUTURE SCREENS CAN BE REMOVED AND INSTALLED WITH THE BRIDGE CRANE AT THE ELEVATION INDICATED.
6. MANDATORY ALTERNATE 2 - REPLACE ALL GALVANIZED STRUCTURAL STEEL ASSOCIATED WITH THE EXTERIOR STAIRS AND PLATFORM ASSEMBLIES, AS WELL AS THE PLATFORMS SPANNING THE ELEVATED CONCRETE CHANNELS WITHIN THE INTERIOR OF THE HEADWORKS BUILDING, WITH TYPE 316 STAINLESS STEEL

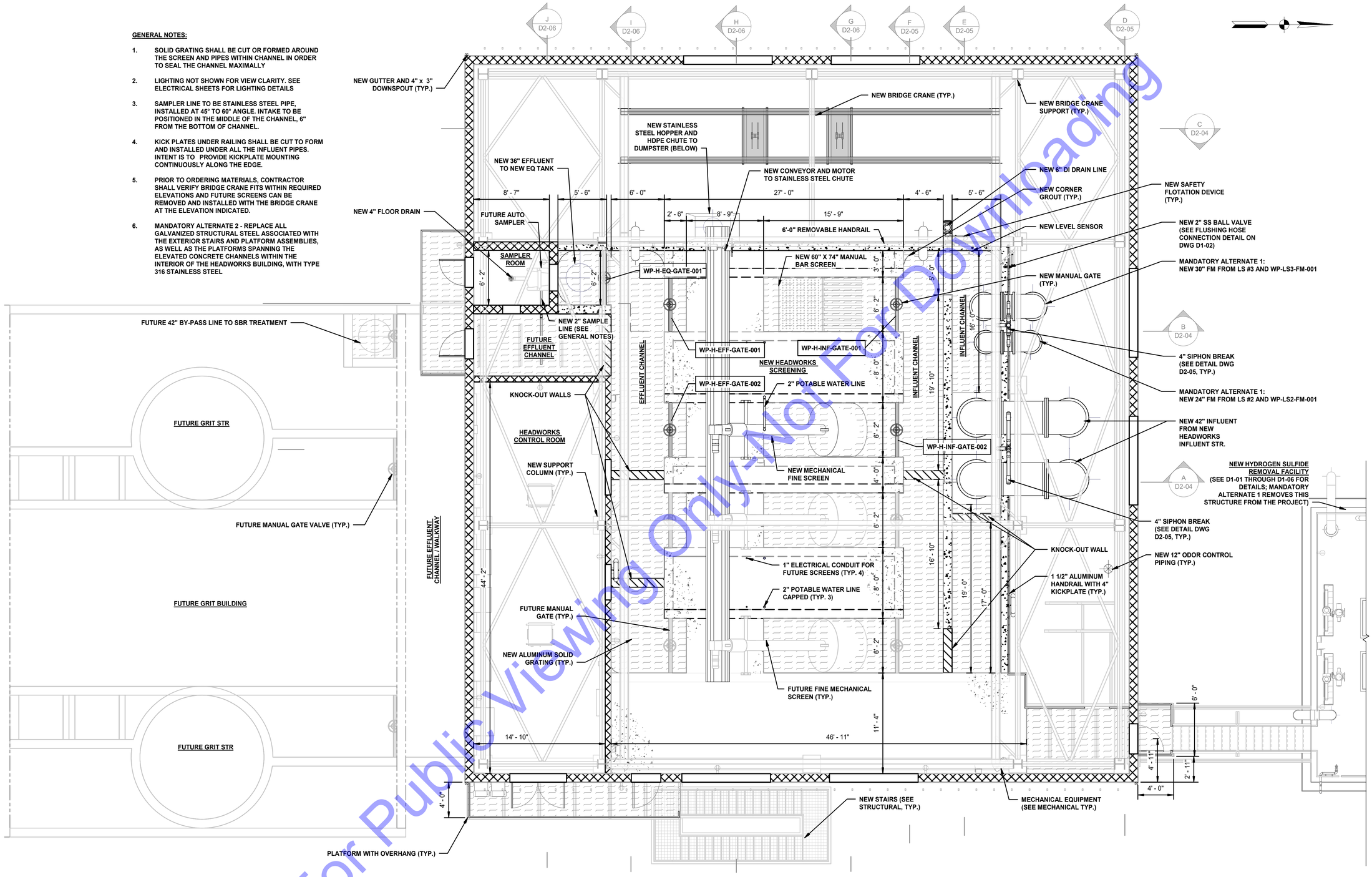

NEW HEADWORKS UPPER PLAN

SCALE: 3/16" = 1'-0"

0' 4' 8' 12'

For Public Viewing Only-Not For Download

COMMONWEALTH ENGINEERS, INC.
A wealth of resources to master a country's goal
https://commonwealthengineers.com/
OFFICE LOCATIONS IN:
INDIANAPOLIS, IN (2)
EVANSVILLE, IN
FORT WAYNE, IN
CROWN POINT, IN
BOWLING GREEN, KY
SOUTH BEND, IN

RUDOLPH J. NOTICH REGISTERED 19400077 STATE OF INDIANA PROFESSIONAL ENGINEER

Signature 10/03/2025 Date

TOWN OF NEWBURGH
WARRICK COUNTY, INDIANA

WASTEWATER TREATMENT
PLANT FLOW EQ BASIN

© 2024 BY COMMONWEALTH ENGINEERS, INC. ALL RIGHTS RESERVED. REPRODUCTION BY ANY METHOD IN WHOLE OR IN PART WITHOUT PERMISSION IS PROHIBITED

Indiana 811 Know what's below. 811 before you dig. 1-800-382-5544 (ITS THE LAW)

No.	Submittal / Revision	By	Date

Designed By:	Drawn By:	Checked By:
RJN	ANR	DOF
Issue Date: 10/03/25	Project No: S18005-41	Scale: AS SHOWN

NEW HEADWORKS UPPER PLAN

Drawing No: **D2-03**

Sheet: 36 OF 161

Saved: 10/2/2025 2:29:39 PM Current Local File: Autodesk Docs://Newburgh New WWTP EQ and Headworks/Newburgh Headworks V 23.rvt

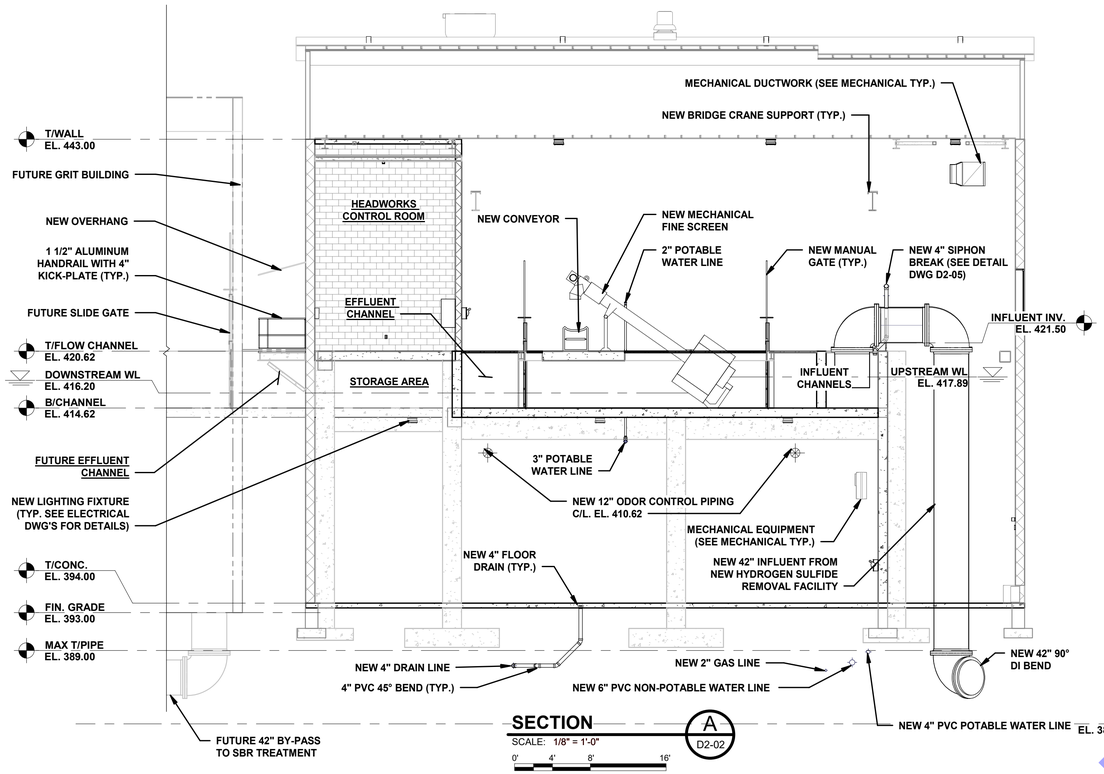

SECTION A D2-02
SCALE: 1/8" = 1'-0"
0' 4' 8' 16'

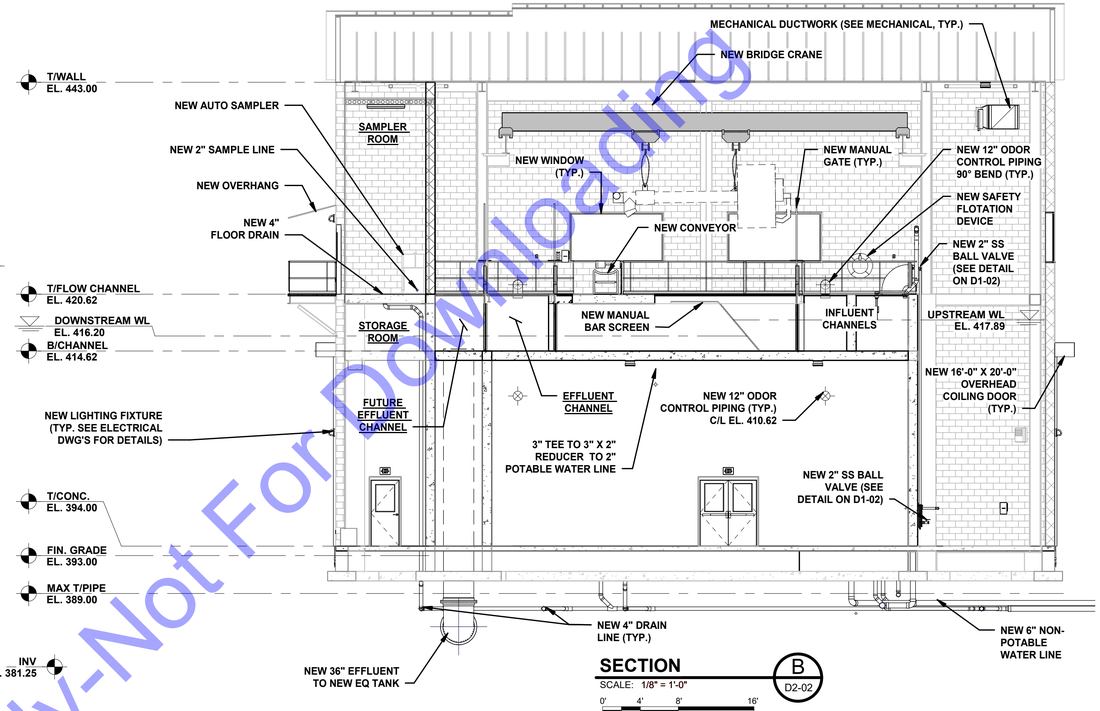

SECTION B D2-02
SCALE: 1/8" = 1'-0"
0' 4' 8' 16'

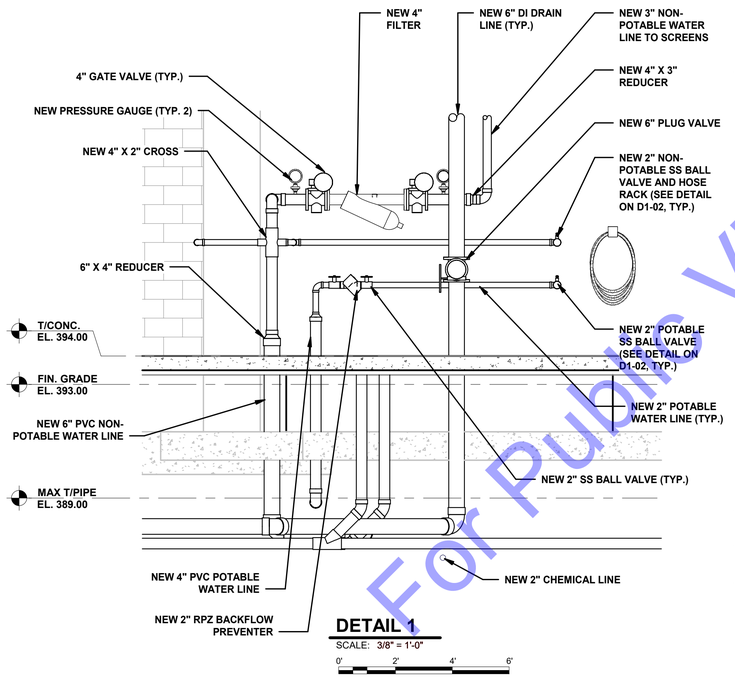

DETAIL 1
SCALE: 3/8" = 1'-0"
0' 2' 4' 6'

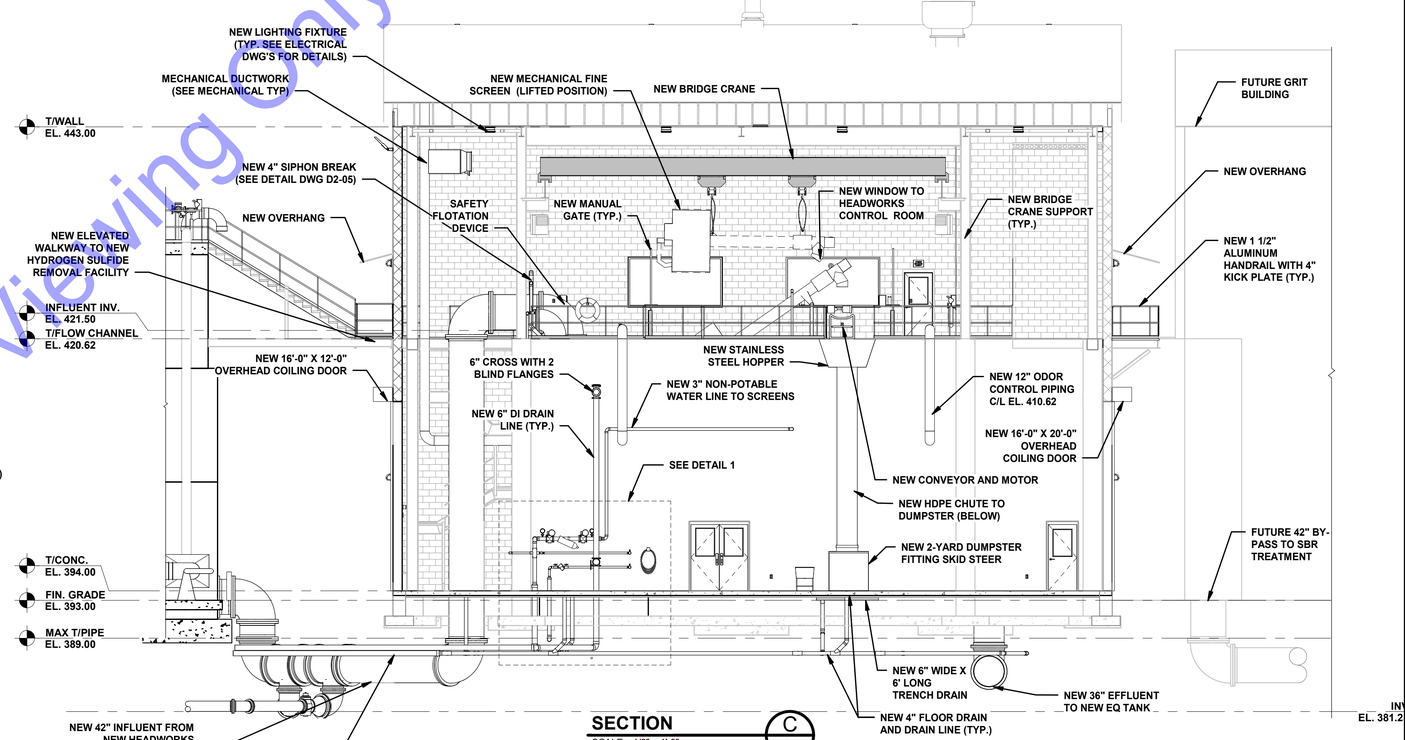

SECTION C D2-02
SCALE: 1/8" = 1'-0"
0' 4' 8' 16'

For Public Viewing Only-Not For Downloading

COMMONWEALTH ENGINEERS, INC.
A wealth of resources to master a worthy goal
https://commonwealthengineers.com/
OFFICE LOCATIONS IN:
INDIANAPOLIS, IN (2)
EVANSVILLE, IN
FORT WAYNE, IN
CROWN POINT, IN
BOWLING GREEN, KY
SOUTH BEND, IN

RUDOLPH J. NOVICH REGISTERED 19400077 STATE OF INDIANA PROFESSIONAL ENGINEER
Signature 10/03/2025 Date

TOWN OF NEWBURGH
WARRICK COUNTY, INDIANA

WASTEWATER TREATMENT
PLANT FLOW EQ BASIN

© 2024 BY COMMONWEALTH ENGINEERS, INC. ALL RIGHTS RESERVED. REPRODUCTION BY ANY METHOD IN WHOLE OR IN PART WITHOUT PERMISSION IS PROHIBITED

Indiana 811 Know what's below. 811 before you dig. 1-800-382-5544 (ITS THE LAW)

No.	Submittal / Revision	By	Date

Designed By:	Drawn By:	Checked By:
RJN	ANR	DOF
Issue Date: 10/03/25	Project No: S18005-41	Scale: AS SHOWN

NEW HEADWORKS SECTIONS I

Drawing No: **D2-04**

Sheet: 37 OF 161

Saved: 10/2/2025 2:29:46 PM Current Local File: Autodesk Docs://Newburgh New WWTP EQ and Headworks/Newburgh Headworks V 23.rvt

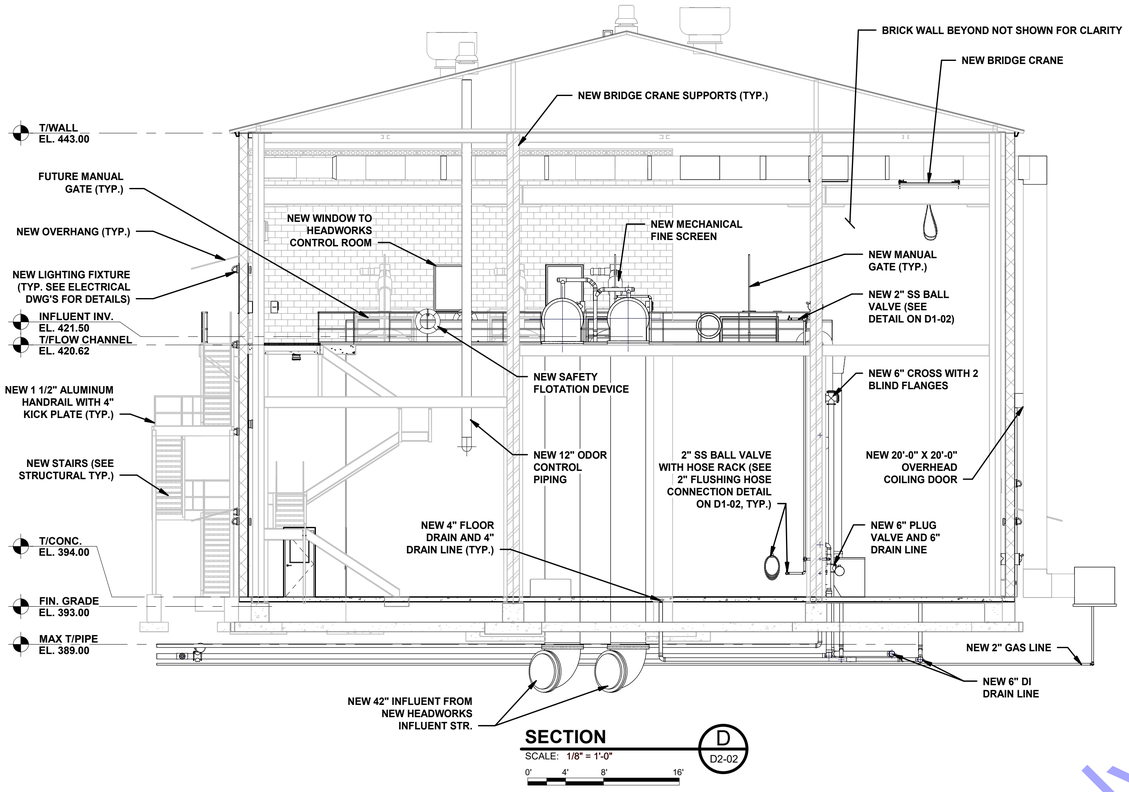

SECTION D D2-02
SCALE: 1/8" = 1'-0"
0' 4' 8' 16'

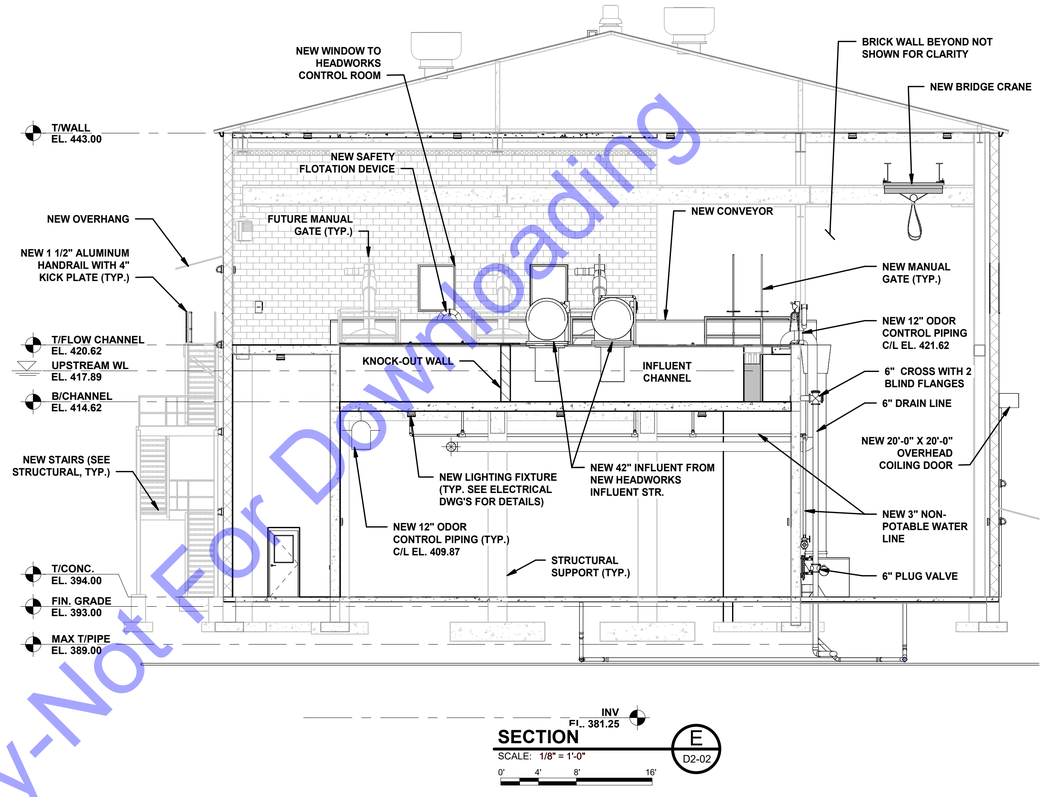

SECTION E D2-02
SCALE: 1/8" = 1'-0"
0' 4' 8' 16'

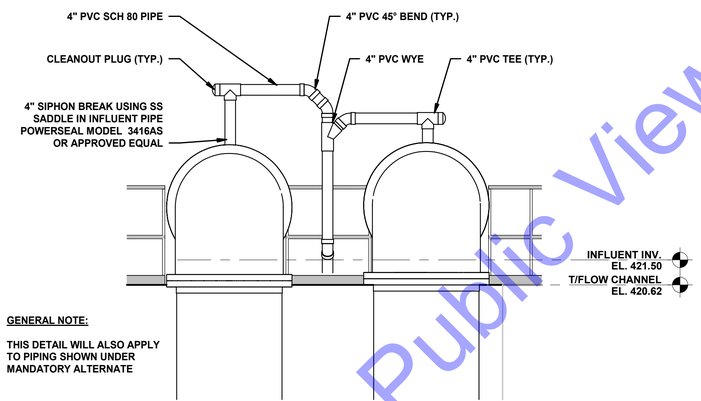

GENERAL NOTE:

THIS DETAIL WILL ALSO APPLY TO PIPING SHOWN UNDER MANDATORY ALTERNATE

SIPHON BREAK DETAIL
SCALE: 3/8" = 1'-0"
0' 2' 4' 6'

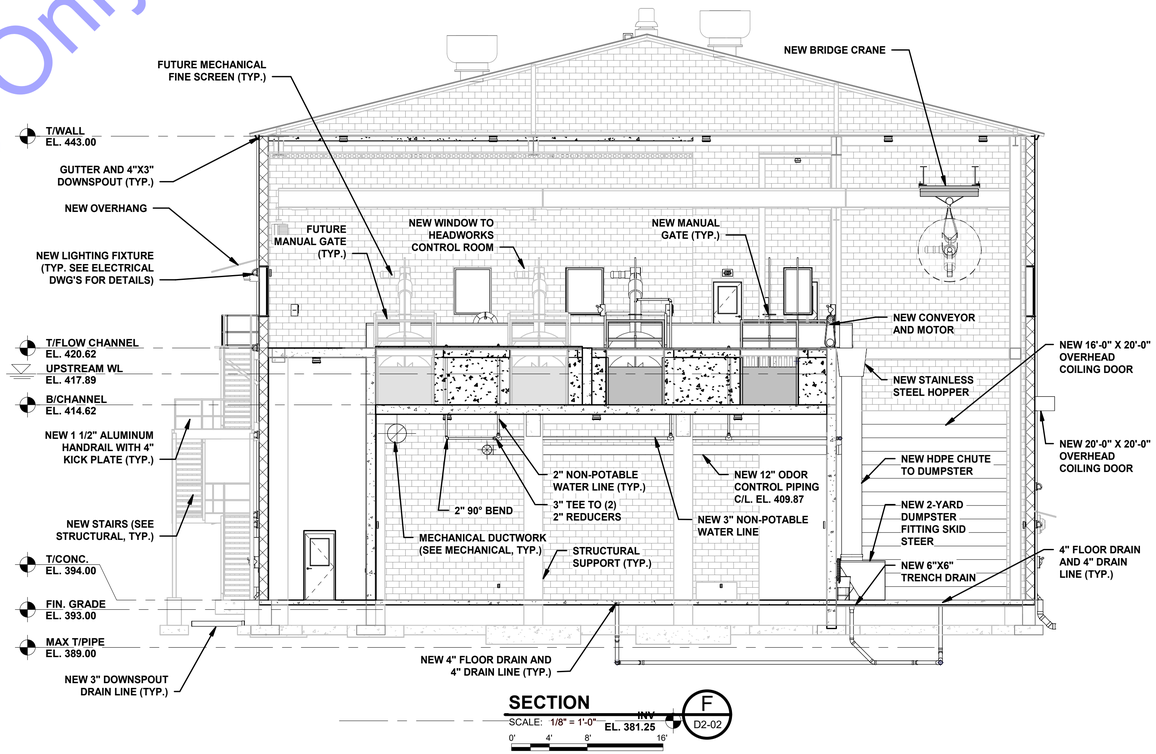

SECTION F D2-02
SCALE: 1/8" = 1'-0" INV EL. 381.25
0' 4' 8' 16'

For Public Viewing Only-Not For Downloading

COMMONWEALTH ENGINEERS, INC.
A wealth of resources to master a worthy goal
https://commonwealthengineers.com/
OFFICE LOCATIONS IN:
INDIANAPOLIS, IN (2)
EVANSVILLE, IN
FORT WAYNE, IN
CROWN POINT, IN
BOWLING GREEN, KY
SOUTH BEND, IN

RUDOLPH J. NOTICH REGISTERED 19400077 STATE OF INDIANA PROFESSIONAL ENGINEER

Signature 10/03/2025 Date

TOWN OF NEWBURGH
WARRICK COUNTY, INDIANA

WASTEWATER TREATMENT
PLANT FLOW EQ BASIN

© 2024 BY COMMONWEALTH ENGINEERS, INC. ALL RIGHTS RESERVED. DUPLICATION BY ANY METHOD IN WHOLE OR IN PART WITHOUT PERMISSION IS PROHIBITED

Indiana 811 Know what's below. 811 before you dig. 1-800-382-5544 (ITS THE LAW)

No.	Submittal / Revision	By	Date

Designed By:	Drawn By:	Checked By:
RJN	ANR	DOF
Issue Date: 10/03/25	Project No: S18005-41	Scale: AS SHOWN

NEW HEADWORKS SECTIONS II

Drawing No: **D2-05**

Sheet: 38 OF 161

Saved: 10/2/2025 2:29:54 PM Current Local File: Autodesk Docs://Newburgh New WWTP EQ and Headworks/Newburgh Headworks V 23.rvt

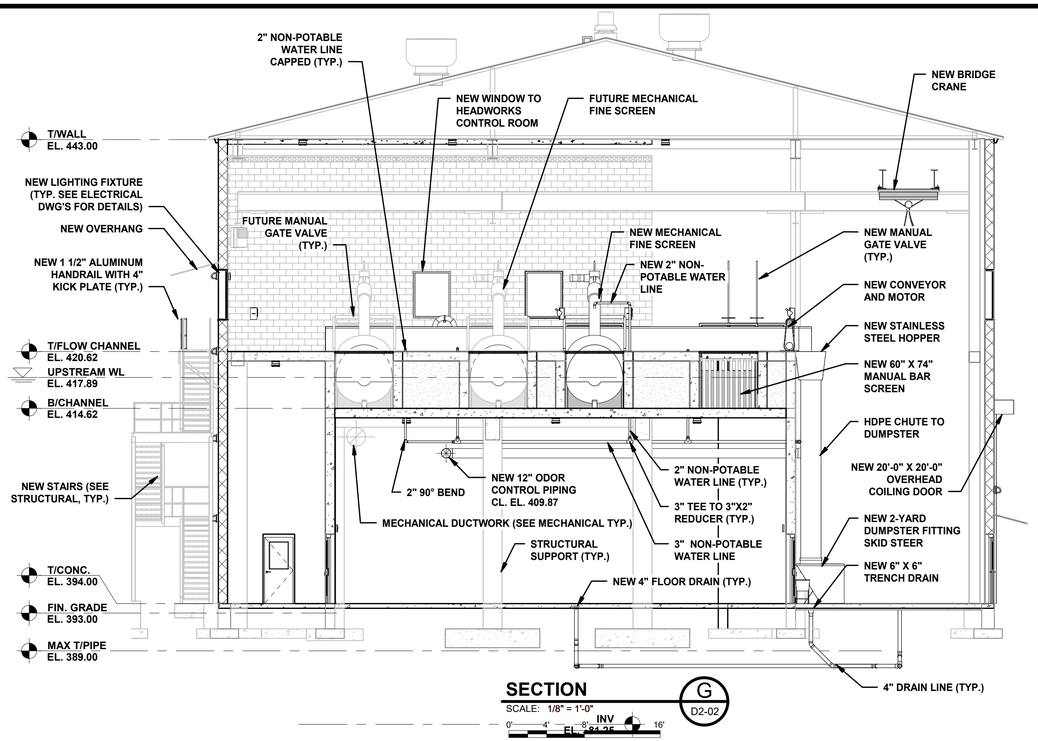

SECTION G D2-02
SCALE: 1/8" = 1'-0"
0' 4' 8' 16'
INV EL. 394.25

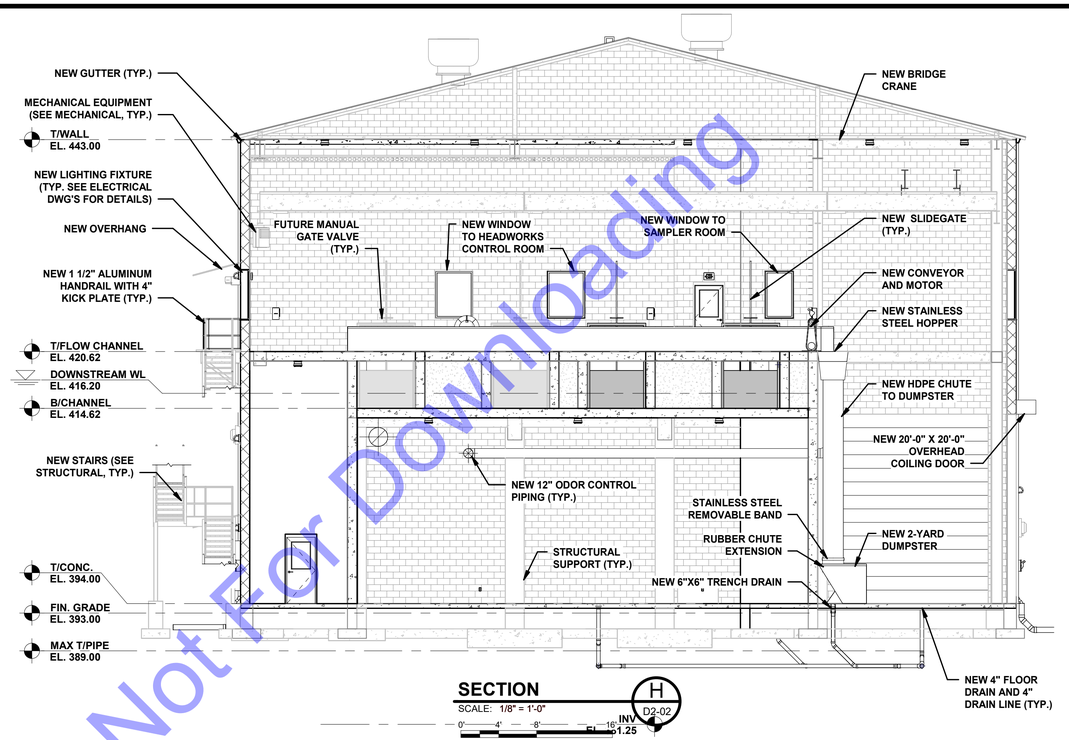

SECTION H D2-02
SCALE: 1/8" = 1'-0"
0' 4' 8' 16'
INV EL. 391.25

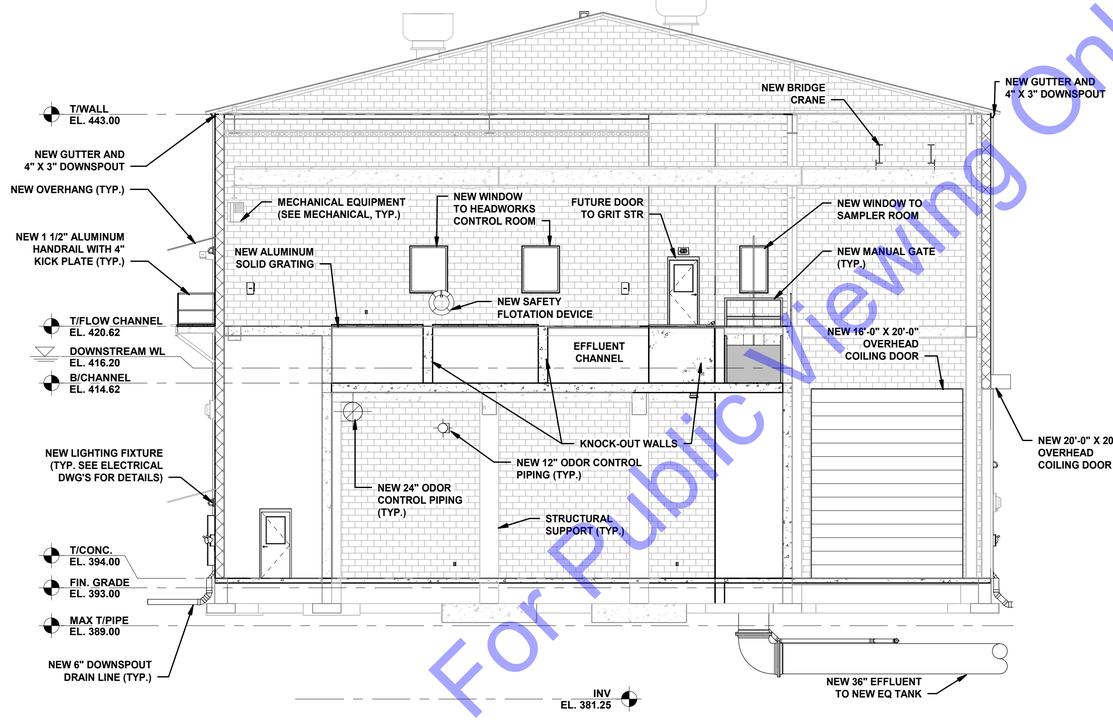

SECTION I D2-02
SCALE: 1/8" = 1'-0"
0' 4' 8' 16'

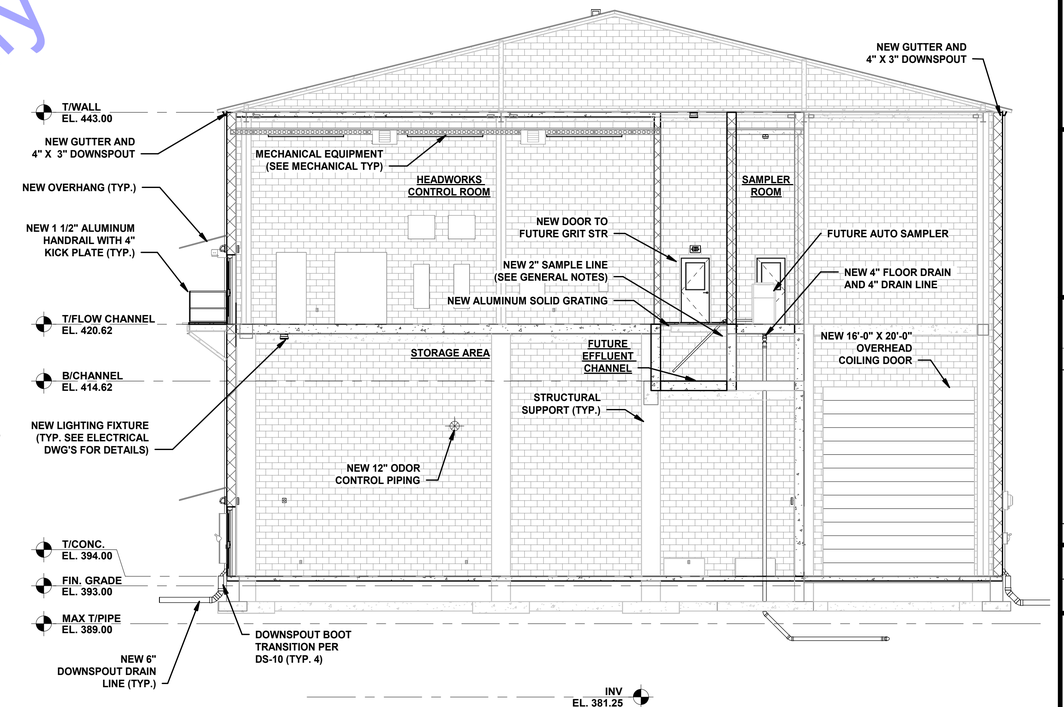

SECTION J D2-02
SCALE: 1/8" = 1'-0"
0' 4' 8' 16'

GENERAL NOTES:

1. SAMPLER LINE TO BE STAINLESS STEEL PIPE, INSTALLED AT 45° TO 60° ANGLE. INTAKE TO BE POSITIONED IN THE MIDDLE OF THE CHANNEL, 6" FROM THE BOTTOM OF CHANNEL.

For Public Viewing Only-Not For Downloading

COMMONWEALTH ENGINEERS, INC.
A wealth of resources to master a worthy goal
https://commonwealthengineers.com/
OFFICE LOCATIONS IN:
INDIANAPOLIS, IN (2)
EVANSVILLE, IN
FORT WAYNE, IN
CROWN POINT, IN
BOWLING GREEN, KY
SOUTH BEND, IN

RUDOLPH J. NOTICH REGISTERED 19400077 STATE OF INDIANA PROFESSIONAL ENGINEER
Signature 10/03/2025 Date

TOWN OF NEWBURGH
WARRICK COUNTY, INDIANA

WASTEWATER TREATMENT
PLANT FLOW EQ BASIN

© 2024 BY COMMONWEALTH ENGINEERS, INC. ALL RIGHTS RESERVED. REPRODUCTION BY ANY METHOD IN WHOLE OR IN PART WITHOUT PERMISSION IS PROHIBITED

Indiana 811 Know what's below. Call before you dig. 1-800-382-5544 (ITS THE LAW)

No.	Submittal / Revision	By	Date

Designed By:	Drawn By:	Checked By:
RJN	ANR	DOF
Issue Date:	Project No:	Scale:
10/03/25	S18005-41	AS SHOWN

NEW HEADWORKS SECTIONS III

Drawing No:
D2-06
Sheet: 39 OF 161

Saved: 10/2/2025 2:29:58 PM Current Local File: Autodesk Docs://Newburgh New WWTP EQ and Headworks/Newburgh Headworks V 23.rvt

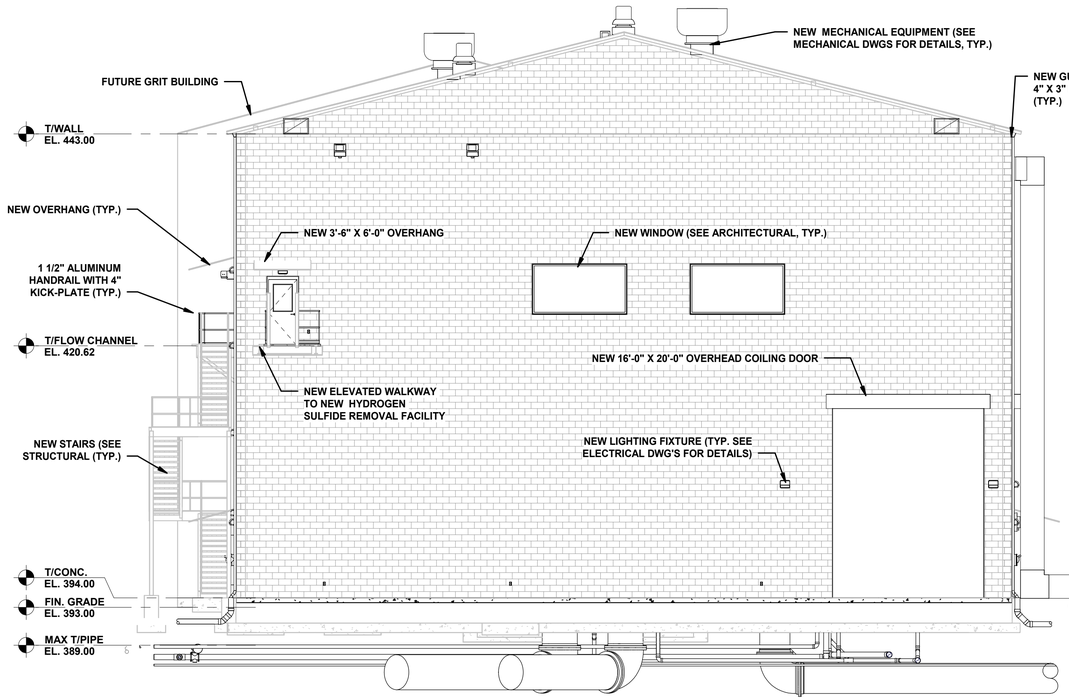

NORTH ELEVATION

SCALE: 1/8" = 1'-0"

0' 4' 8' 16'

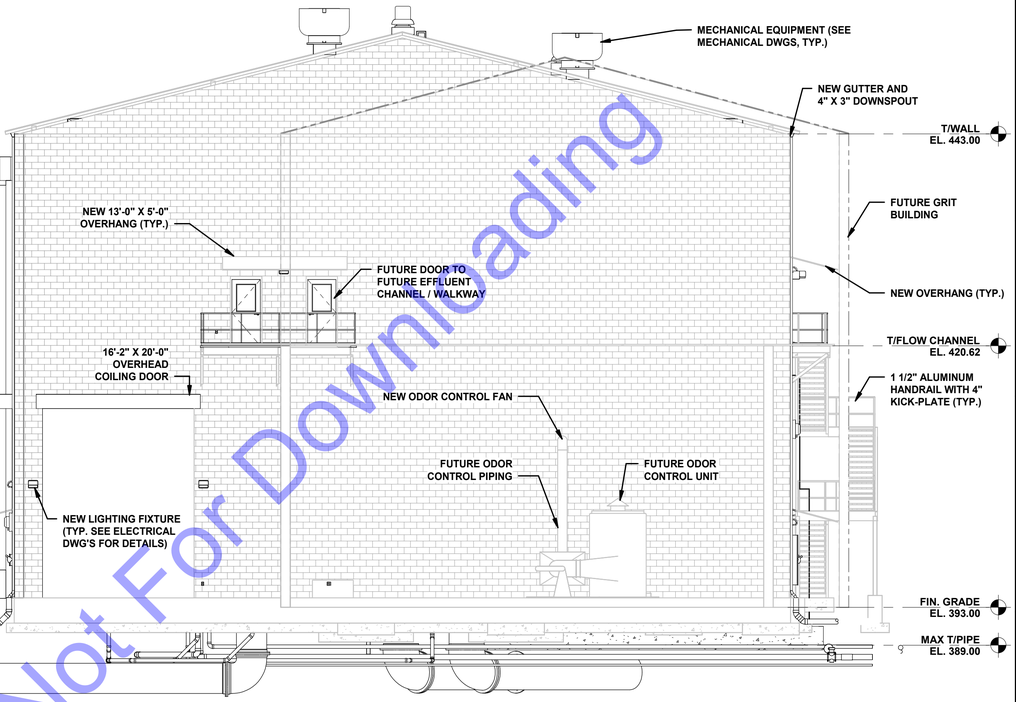

SOUTH ELEVATION

SCALE: 1/8" = 1'-0"

0' 4' 8' 16'

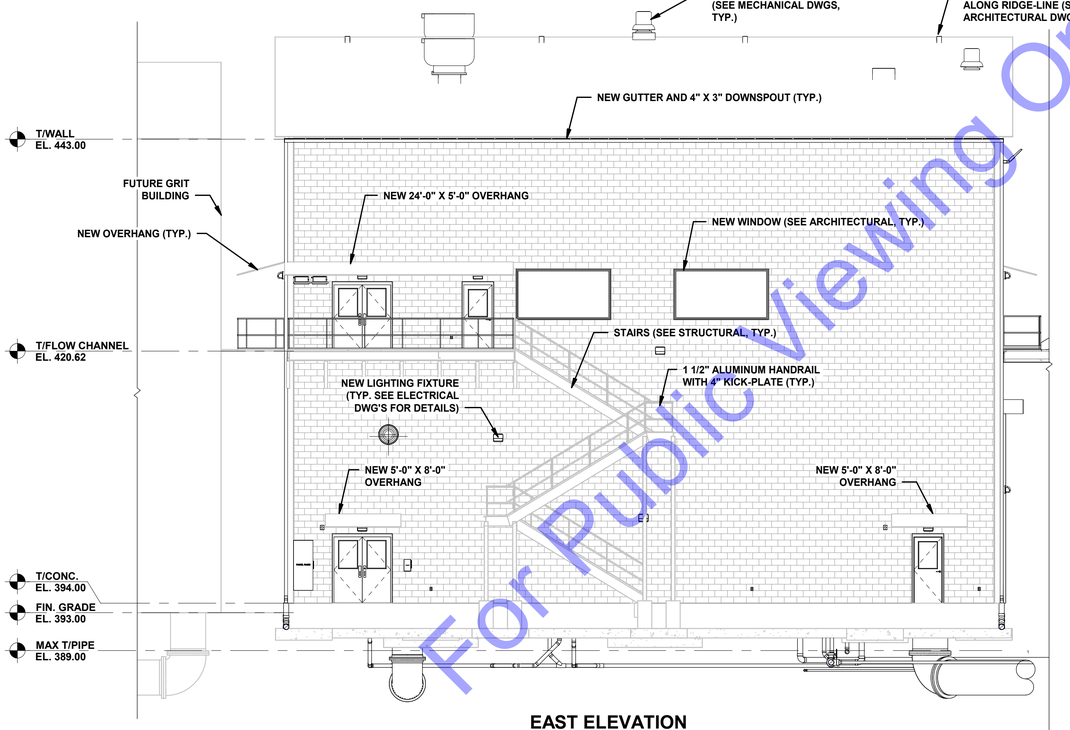

EAST ELEVATION

SCALE: 1/8" = 1'-0"

0' 4' 8' 16'

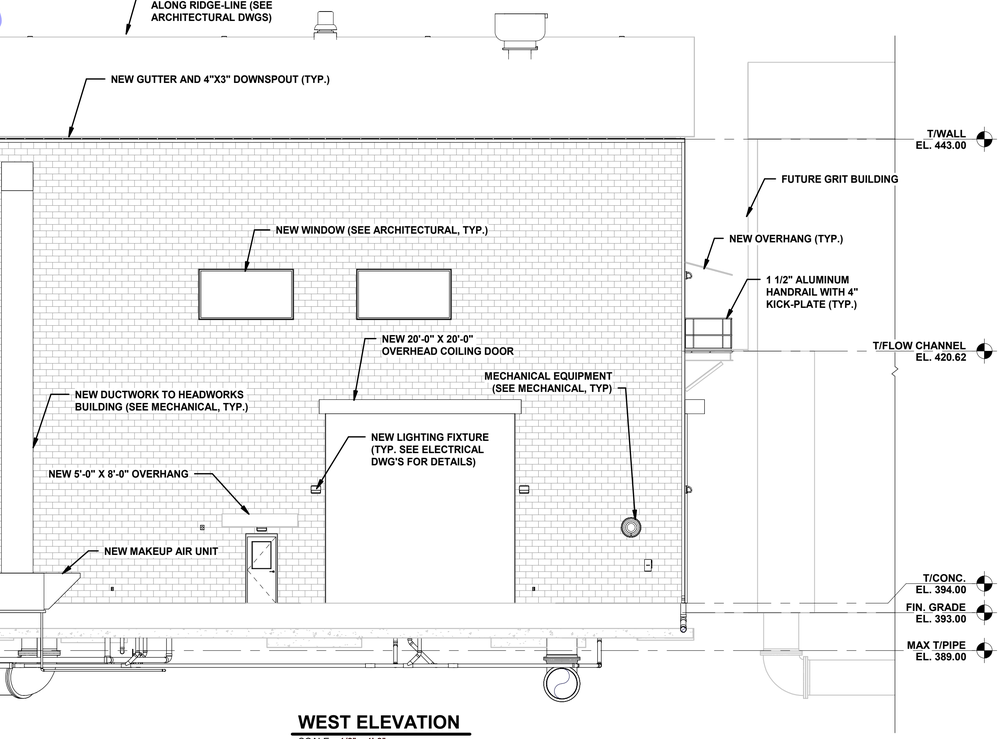

WEST ELEVATION

SCALE: 1/8" = 1'-0"

0' 4' 8' 16'

For Public Viewing Only-Not For Downloading

COMMONWEALTH ENGINEERS, INC.
A wealth of resources to master a common goal
https://commonwealthengineers.com/
OFFICE LOCATIONS IN:
INDIANAPOLIS, IN (2)
EVANSVILLE, IN
FORT WAYNE, IN
CROWN POINT, IN
BOWLING GREEN, KY
SOUTH BEND, IN

RUDOLPH J. NOTICH
REGISTERED
19400077
STATE OF INDIANA
PROFESSIONAL ENGINEER

Signature — Date: 10/03/2025

TOWN OF NEWBURGH
WARRICK COUNTY, INDIANA

WASTEWATER TREATMENT
PLANT FLOW EQ BASIN

© 2024 BY COMMONWEALTH ENGINEERS, INC. ALL RIGHTS RESERVED. DISTRIBUTION BY ANY METHOD IN WHOLE OR IN PART WITHOUT PERMISSION IS PROHIBITED

Indiana 811 Know what's below. 811 before you dig. 1-800-382-5544 (ITS THE LAW)

No.	Submittal / Revision	By	Date

Designed By:	Drawn By:	Checked By:
RJN	ANR	DOF
Issue Date: 10/03/25	Project No: S18005-41	Scale: AS SHOWN

NEW HEADWORKS ELEVATIONS

Drawing No:

D2-07

Sheet: 40 OF 161

Saved: 10/2/2025 2:30:03 PM Current Local File: Autodesk Docs://Newburgh New WWTP EQ and Headworks/Newburgh Headworks V 23.rvt

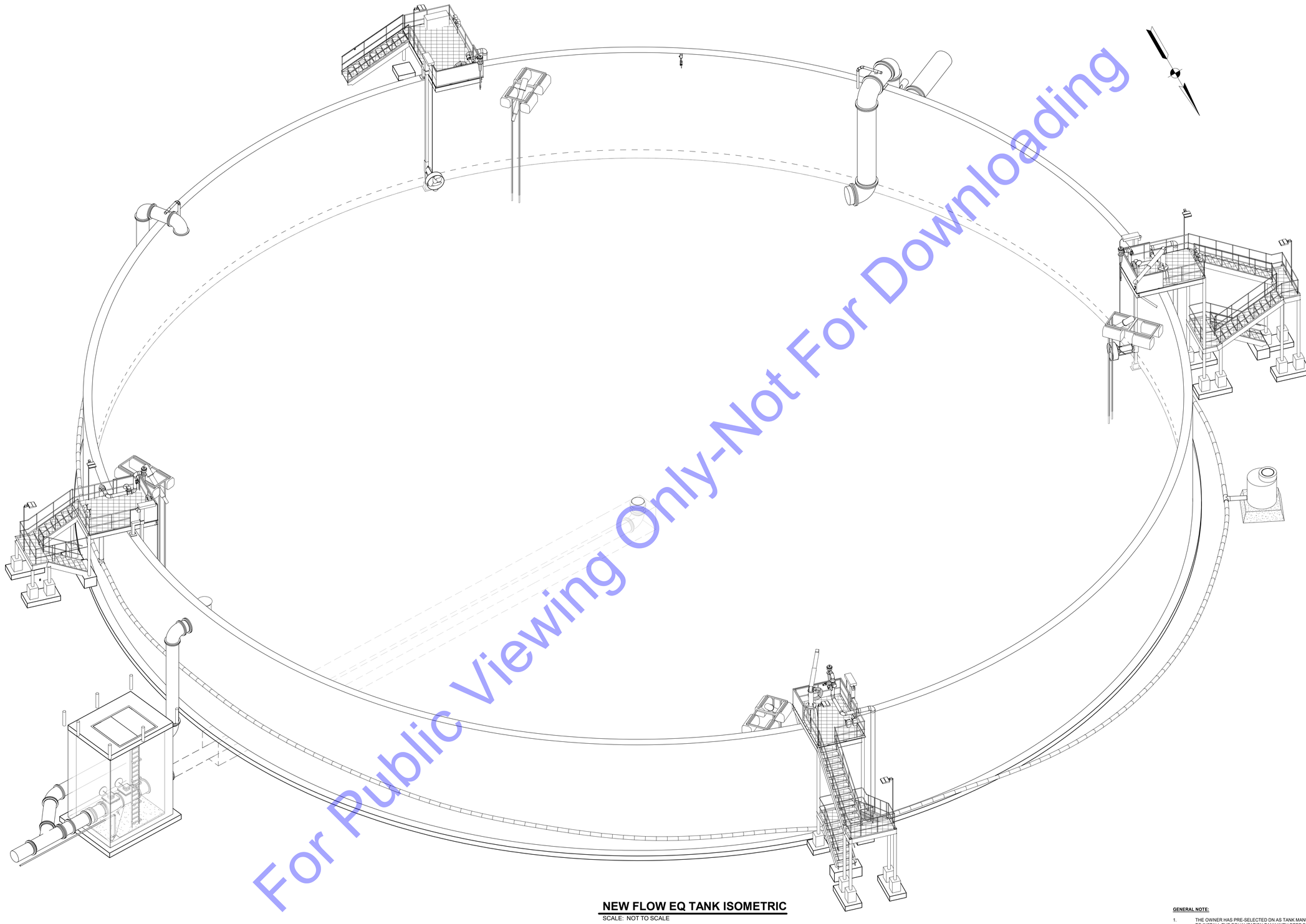

For Public Viewing Only-Not For Downloading

NEW FLOW EQ TANK ISOMETRIC

SCALE: NOT TO SCALE

GENERAL NOTE:

1. THE OWNER HAS PRE-SELECTED DN AS TANK MANUFACTURER TO INSTALL THE EQUALIZATION TANK WITH DEEP FOUNDATIONS FOR THIS PROJECT. THE SELECTED PROPOSAL IS INCLUDED IN THE APPENDICES OF THE DETAILED SPECIFICATIONS. GENERAL CONTRACTOR IS RESPONSIBLE FOR FOR ALL COORDINATION WITH DN AND ALL WORK NOT COVERED IN DN SCOPE.

COMMONWEALTH ENGINEERS, INC.
A wealth of resources to master a country's goal
https://commonwealthengineers.com/
OFFICE LOCATIONS IN:
INDIANAPOLIS, IN (2)
EVANSVILLE, IN
FORT WAYNE, IN
CROWN POINT, IN
BOWLING GREEN, KY
SOUTH BEND, IN

PRELIMINARY
FOR REVIEW ONLY

Signature Date

TOWN OF NEWBURGH
WARRICK COUNTY, INDIANA

WASTEWATER TREATMENT
PLANT REQUEST FOR FLOW
EQUALIZATION TANK AND
FOUNDATION

© 2024 BY COMMONWEALTH ENGINEERS, INC. ALL RIGHTS RESERVED. REPRODUCTION BY ANY METHOD IN WHOLE OR IN PART WITHOUT PERMISSION IS PROHIBITED

Indiana 811 Know what's below. 811 before you dig.
1-800-382-5544
(ITS THE LAW)

No.	Submittal / Revision	By	Date

Designed By:	Drawn By:	Checked By:
RJN	ANR	DOF
Issue Date: 10/03/25	Project No: S18005-41	Scale: AS SHOWN

NEW FLOW EQ TANK ISOMETRIC

Drawing No:

D3-01

Sheet: 41 OF 161

Saved: 10/2/2025 12:24:36 PM Current Local File: Autodesk Docs://Newburgh New WWTP EQ and Headworks/Newburgh EQ Tank v.23.rvt

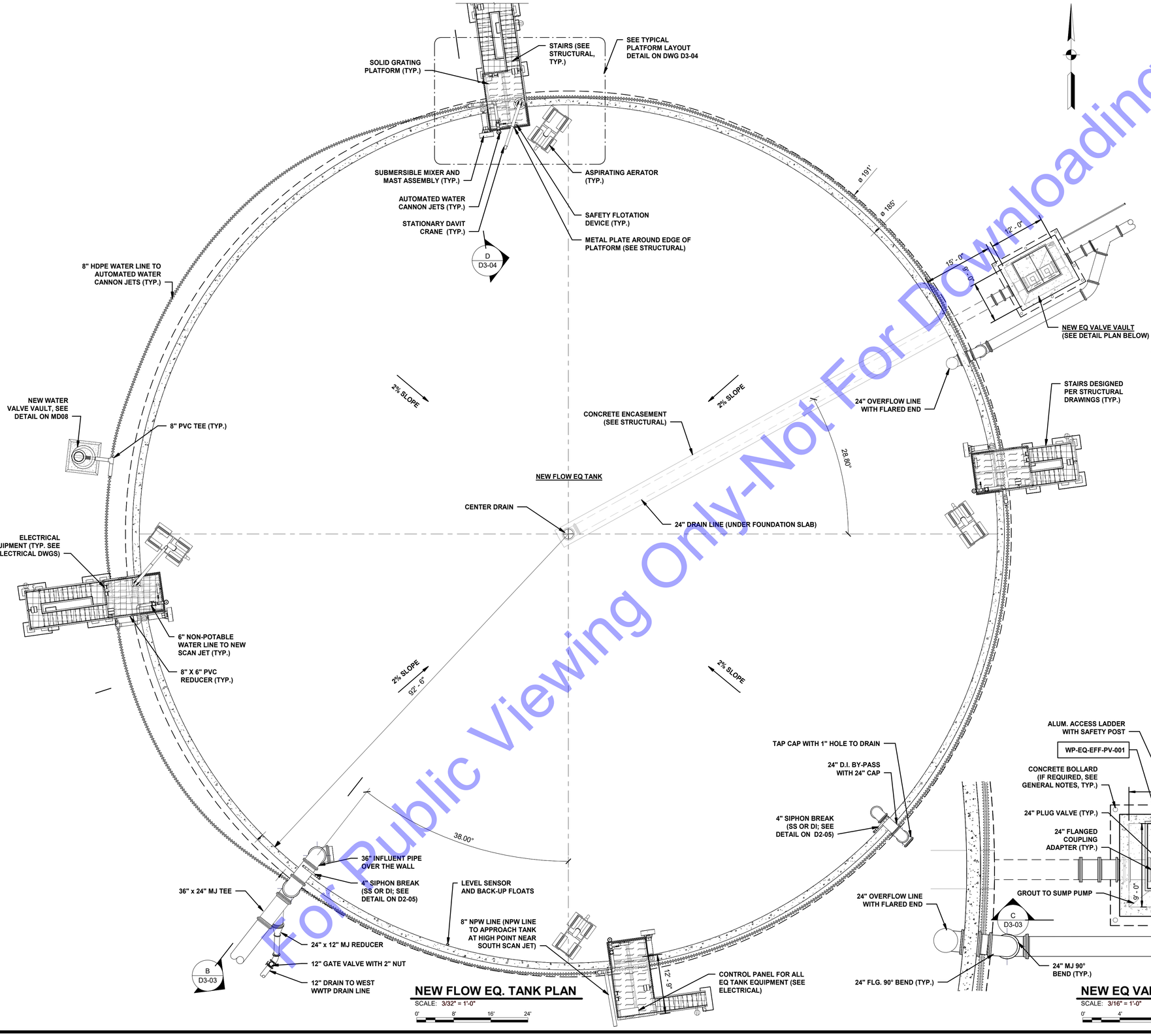

NEW FLOW EQ. TANK PLAN

SCALE: 3/32" = 1'-0"

0' 8' 16' 24'

NEW EQ VALVE VAULT DETAIL PLAN

SCALE: 3/16" = 1'-0"

0' 4' 8' 12'

GENERAL NOTES:

1. ASPIRATING AERATORS ON THE NORTH AND WEST SIDES OF TANKS TO BE PLACED IN LOCATION THAT IS LIFTABLE BY DAVIT CRANES ON THE PLATFORMS. CONTRACTOR TO CONFIRM DAVIT CRANE SELECTION IS SUITABLE TO LIFT ASPIRATING AERATOR OUT OF TANK PRIOR TO ORDERING MATERIALS. ASPIRATING AERATORS ON THE SOUTH AND EAST TO BE PLACED IN LOCATION THAT IS LIFTABLE BY OWNER'S CRANE TRUCK. CONTRACTOR TO CONFIRM PLACEMENT IS ACCEPTABLE TO THE OWNER PRIOR TO FINAL INSTALLATION FOR ALL MIXING AND AERATION EQUIPMENT.
2. INFLUENT PIPING AND NON-POTABLE WATER LINES TO BE INSULATED AND HEAT TRACED.
3. IF H-2O CONTINUOUS LOAD RATED CERTIFICATION CAN NOT BE PROVIDED FOR THE HATCH, CONTRACTOR SHALL INSTALL SIX FOLDABLE/REMOVABLE BOLLARDS AT THE VALVE VAULT. ORIENTATION OF BOLLARDS SHALL BE PER OWNER PREFERENCE.
4. FINAL ORIENTATION OF HATCHES AND BOLLARDS ARE SUBJECT TO OWNER APPROVAL.
5. CONTRACTOR SHALL VERIFY PRECAST VALVE VAULT BOX IS SIZED PROPERLY TO ALLOW FOR INSTALLATION OF ALL REQUIRED HATCHES WHILE STILL MAINTAINING THE STRUCTURAL INTEGRITY OF VALVE VAULT TOP SLAB. ANY MODIFICATIONS IN SIZING OF VALVE VAULT TO MAINTAIN STRUCTURAL INTEGRITY SHALL BE MADE AT NO ADDITIONAL COST TO OWNER.
6. CONTRACTOR TO PROVIDE BALLAST CALCULATIONS FOR THE NEW EQ VALVE VAULT ASSUMING FULL SUBMERGANCE CONDITIONS
7. MANDATORY ALTERNATE 2 - REPLACE ALL GALVANIZED STRUCTURAL STEEL ASSOCIATED WITH THE EXTERIOR STAIRS AND PLATFORM ASSEMBLIES WITH TYPE 316 STAINLESS STEEL

For Public Viewing Only-Not For Downloading

COMMONWEALTH ENGINEERS, INC.
A wealth of resources to master a country's goal
https://commonwealthengineers.com/
OFFICE LOCATIONS IN:
INDIANAPOLIS, IN (2)
EVANSVILLE, IN
FORT WAYNE, IN
CROWN POINT, IN
BOWLING GREEN, KY
SOUTH BEND, IN

PRELIMINARY FOR REVIEW ONLY

Signature Date

TOWN OF NEWBURGH
WARRICK COUNTY, INDIANA

WASTEWATER TREATMENT
PLANT REQUEST FOR FLOW
EQUALIZATION TANK AND
FOUNDATION

© 2024 BY COMMONWEALTH ENGINEERS, INC. - ALL RIGHTS RESERVED - REPRODUCTION BY ANY METHOD IN WHOLE OR IN PART WITHOUT PERMISSION IS PROHIBITED

Indiana 811 Know what's below. 811 before you dig. 1-800-382-5544 (ITS THE LAW)

No.	Submittal / Revision	By	Date

Designed By:	Drawn By:	Checked By:
RJN	ANR	DOF
Issue Date: 10/03/25	Project No: S18005-41	Scale: AS SHOWN

NEW FLOW EQ TANK PLAN

Drawing No: **D3-02**

Sheet: 42 OF 161

Saved: 10/2/2025 12:24:39 PM Current Local File: Autodesk Docs://Newburgh New WWTP EQ and Headworks/Newburgh EQ Tank v.23.rvt

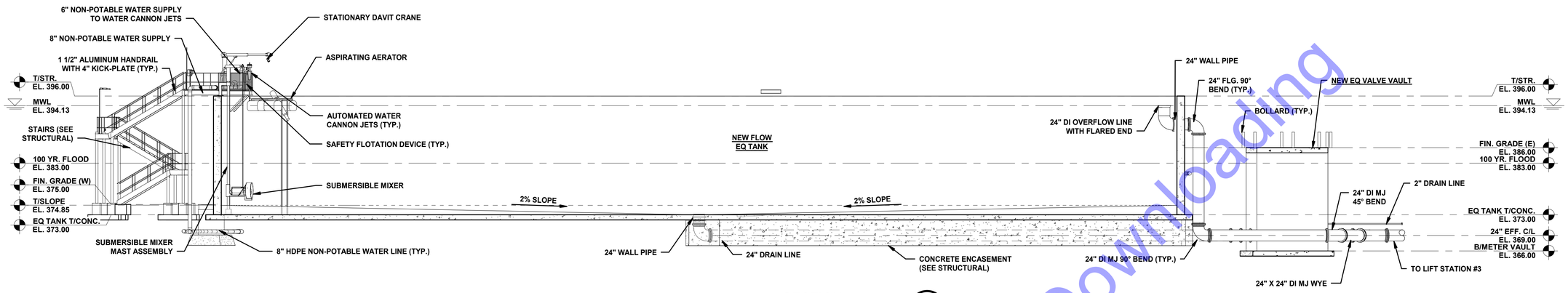

SECTION A D3-02
SCALE: 3/32" = 1'-0"
0' 8' 16' 24'

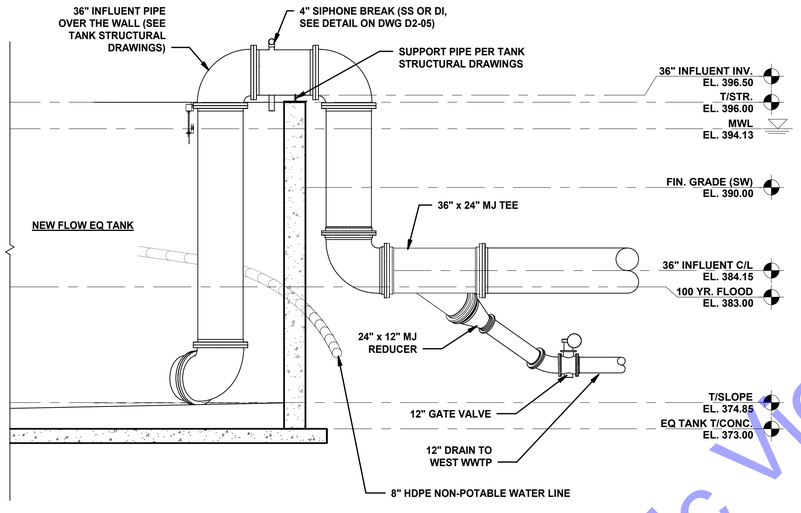

SECTION B D3-02
SCALE: 3/16" = 1'-0"
0' 4' 8' 12'

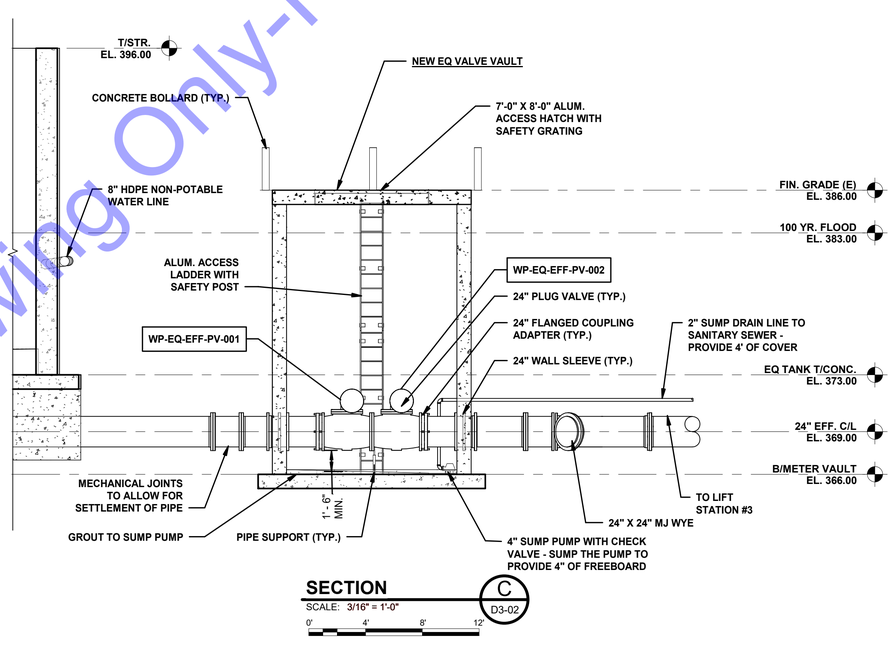

SECTION C D3-02
SCALE: 3/16" = 1'-0"
0' 4' 8' 12'

GENERAL NOTES:

1. ASPIRATING AERATORS ON THE NORTH AND WEST SIDES OF TANKS TO BE PLACED IN LOCATION THAT IS LIFTABLE BY DAVIT CRANES ON THE PLATFORMS. CONTRACTOR TO CONFIRM DAVIT CRANE SELECTION IS SUITABLE TO LIFT ASPIRATING AERATOR OUT OF TANK PRIOR TO ORDERING MATERIALS. ASPIRATING AERATORS ON THE SOUTH AND EAST TO BE PLACED IN LOCATION THAT IS LIFTABLE BY OWNER'S CRANE TRUCK. CONTRACTOR TO CONFIRM PLACEMENT IS ACCEPTABLE TO THE OWNER PRIOR TO FINAL INSTALLATION FOR ALL MIXING AND AERATION EQUIPMENT.
2. INFLUENT PIPING AND NON-POTABLE WATER LINES TO BE INSULATED AND HEAT TRACED.
3. IF H-2O CONTINUOUS LOAD RATED CERTIFICATION CAN NOT BE PROVIDED FOR THE HATCH, CONTRACTOR SHALL INSTALL SIX FOLDABLE/REMOVABLE BOLLARDS AT THE VALVE VAULT. ORIENTATION OF BOLLARDS SHALL BE PER OWNER PREFERENCE.
4. FINAL ORIENTATION OF HATCHES AND BOLLARDS ARE SUBJECT TO OWNER APPROVAL.
5. CONTRACTOR SHALL VERIFY PRECAST VALVE VAULT BOX IS SIZED PROPERLY TO ALLOW FOR INSTALLATION OF ALL REQUIRED HATCHES WHILE STILL MAINTAINING THE STRUCTURAL INTEGRITY OF VALVE VAULT TOP SLAB. ANY MODIFICATIONS IN SIZING OF VALVE VAULT TO MAINTAIN STRUCTURAL INTEGRITY SHALL BE MADE AT NO ADDITIONAL COST TO OWNER.
6. CONTRACTOR TO PROVIDE BALLAST CALCULATIONS FOR THE NEW EQ VALVE VAULT ASSUMING FULL SUBMERGANCE CONDITIONS

For Public Viewing Only-Not For Downloading

COMMONWEALTH ENGINEERS, INC.
A wealth of resources to master a country's goal
https://commonwealthengineers.com/
OFFICE LOCATIONS IN:
INDIANAPOLIS, IN (2)
EVANSVILLE, IN
FORT WAYNE, IN
CROWN POINT, IN
BOWLING GREEN, KY
SOUTH BEND, IN

PRELIMINARY FOR REVIEW ONLY

Signature Date

TOWN OF NEWBURGH
WARRICK COUNTY, INDIANA

WASTEWATER TREATMENT PLANT REQUEST FOR FLOW EQUALIZATION TANK AND FOUNDATION

© 2024 BY COMMONWEALTH ENGINEERS, INC. ALL RIGHTS RESERVED. REPRODUCTION BY ANY METHOD IN WHOLE OR IN PART WITHOUT PERMISSION IS PROHIBITED

Indiana 811 Know what's below. 811 before you dig. 1-800-382-5544 (ITS THE LAW)

No.	Submittal / Revision	By	Date

Designed By:	Drawn By:	Checked By:
RJN	ANR	DOF
Issue Date: 10/03/25	Project No: S18005-41	Scale: AS SHOWN

NEW FLOW EQ TANK SECTIONS

Drawing No: **D3-03**

Sheet: 43 OF 161

Saved: 10/2/2025 12:24:43 PM Current Local File: Autodesk Docs://Newburgh New WWTP EQ and Headworks/Newburgh EQ Tank v.23.rvt

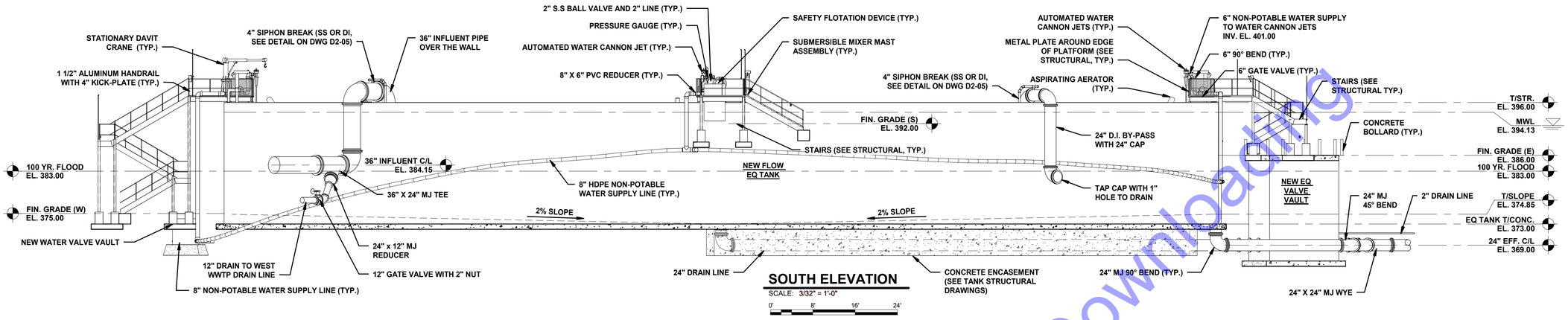

SOUTH ELEVATION

SCALE: 3/32" = 1'-0"

0' 8' 16' 24'

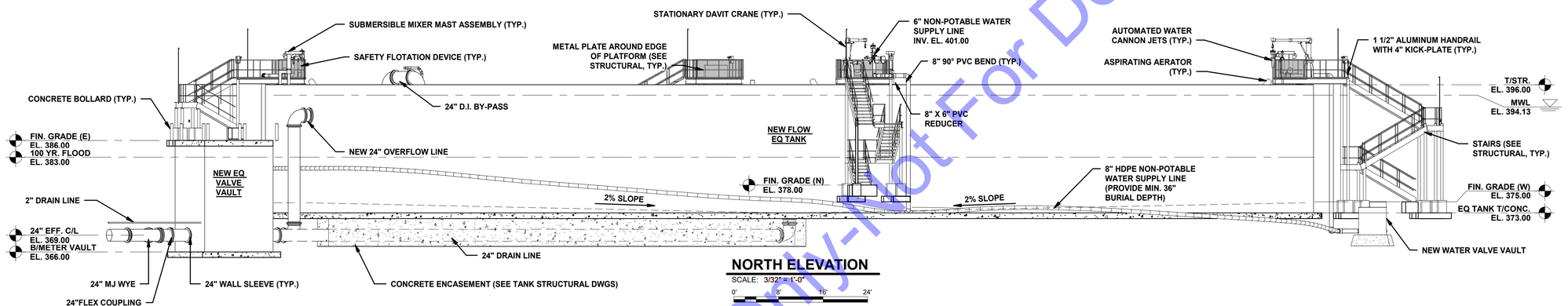

NORTH ELEVATION

SCALE: 3/32" = 1'-0"

0' 8' 16' 24'

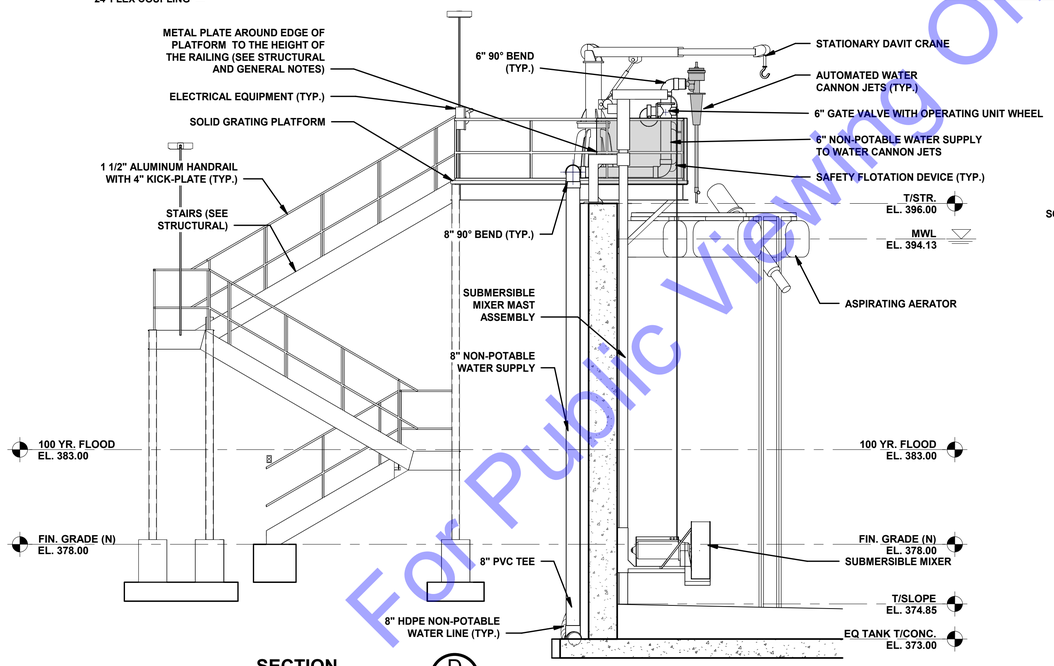

SECTION

D D3-02

SCALE: 1/4" = 1'-0"

0' 2' 4' 8'

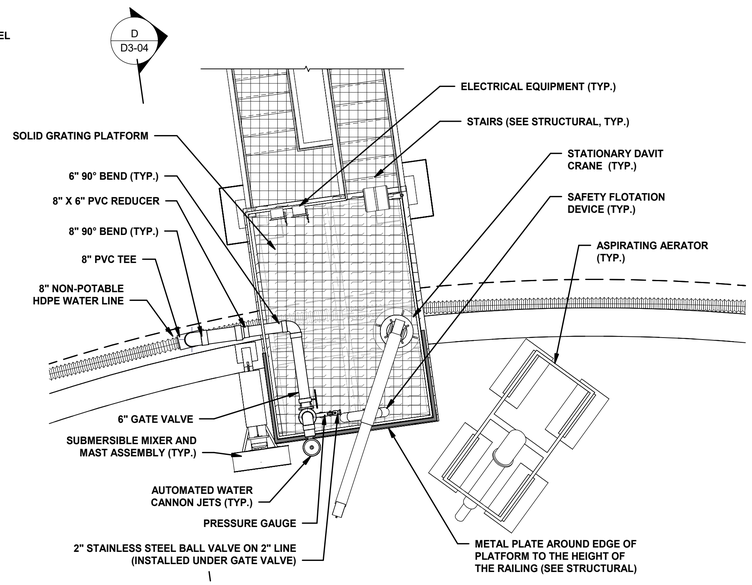

TYP. PLATFORM LAYOUT DETAIL

SCALE: 1/4" = 1'-0"

0' 2' 4' 8'

GENERAL NOTES:

1. ASPIRATING AERATORS ON THE NORTH AND WEST SIDES OF TANKS TO BE PLACED IN LOCATION THAT IS LIFTABLE BY DAVIT CRANES ON THE PLATFORMS. CONTRACTOR TO CONFIRM DAVIT CRANE SELECTION IS SUITABLE TO LIFT ASPIRATING AERATOR OUT OF TANK PRIOR TO ORDERING MATERIALS. ASPIRATING AERATORS ON THE SOUTH AND EAST TO BE PLACED IN LOCATION THAT IS LIFTABLE BY OWNER'S CRANE TRUCK. CONTRACTOR TO CONFIRM PLACEMENT IS ACCEPTABLE TO THE OWNER PRIOR TO FINAL INSTALLATION FOR ALL MIXING AND AERATION EQUIPMENT.
2. INFLUENT PIPING AND NON-POTABLE WATER LINES TO BE INSULATED AND HEAT TRACED.
3. IF H-2O CONTINUOUS LOAD RATED CERTIFICATION CAN NOT BE PROVIDED FOR THE HATCH, CONTRACTOR SHALL INSTALL SIX FOLDABLE/REMOVABLE BOLLARDS AT THE VALVE VAULT. ORIENTATION OF BOLLARDS SHALL BE PER OWNER PREFERENCE.
4. FINAL ORIENTATION OF HATCHES AND BOLLARDS ARE SUBJECT TO OWNER APPROVAL.
5. CONTRACTOR SHALL VERIFY PRECAST VALVE VAULT BOX IS SIZED PROPERLY TO ALLOW FOR INSTALLATION OF ALL REQUIRED HATCHES WHILE STILL MAINTAINING THE STRUCTURAL INTEGRITY OF VALVE VAULT TOP SLAB. ANY MODIFICATIONS IN SIZING OF VALVE VAULT TO MAINTAIN STRUCTURAL INTEGRITY SHALL BE MADE AT NO ADDITIONAL COST TO OWNER.
6. CONTRACTOR TO PROVIDE BALLAST CALCULATIONS FOR THE NEW EQ VALVE VAULT ASSUMING FULL SUBMERGANCE CONDITIONS
7. PLATE MOUNTED AROUND PLATFORMS SHALL BE MOUNTED IN SUCH A WAY THAT IT IS REMOVABLE AND YET DOES NOT ALLOW FOR WATER SPLASHING ONTO PLATFORM

For Public Viewing Only-Not For Download

COMMONWEALTH ENGINEERS, INC.
A wealth of resources to master a worthy goal
https://commonwealthengineers.com/
OFFICE LOCATIONS IN:
INDIANAPOLIS, IN (2)
EVANSVILLE, IN
FORT WAYNE, IN
CROWN POINT, IN
BOWLING GREEN, KY
SOUTH BEND, IN

PRELIMINARY FOR REVIEW ONLY

Signature Date

TOWN OF NEWBURGH
WARRICK COUNTY, INDIANA

WASTEWATER TREATMENT
PLANT REQUEST FOR FLOW
EQUALIZATION TANK AND
FOUNDATION

© 2024 BY COMMONWEALTH ENGINEERS, INC. ALL RIGHTS RESERVED. REPRODUCTION BY ANY METHOD IN WHOLE OR IN PART WITHOUT PERMISSION IS PROHIBITED

Indiana 811 Know what's below. Call before you dig. 1-800-382-5544 (IT'S THE LAW)

No.	Submittal / Revision	By	Date

Designed By:	Drawn By:	Checked By:
RJN	ANR	DOF
Issue Date: 10/03/25	Project No: S18005-41	Scale: AS SHOWN

NEW FLOW EQ TANK ELEVATIONS

Drawing No: **D3-04**

Sheet: 44 OF 161

Saved: 10/2/2025 12:24:45 PM Current Local File: Autodesk Docs://Newburgh New WWTP EQ and Headworks/Newburgh EQ Tank v.23.rvt

GENERAL NOTES:

1. **PROVIDE MOUNTING OF ALL EQUIPMENT WITHIN STRUCTURES PER MANUFACTURER'S RECOMMENDATIONS**

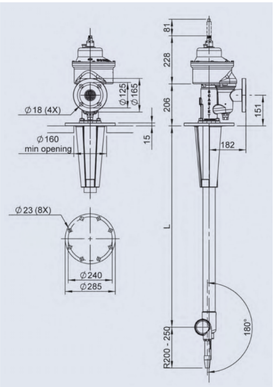

AUTOMATED WATER CANNON JET DETAIL

Specifications

Flow	5-65 m³/h
Inlet pressure	6-12 bar
Max pressure	14 bar
Recommended pressure	8 bar
Max temperature	95°C
Rotation speed	1-1.6 rpm
Standard length	1500 mm
Weight	43 kg
Per additional meter of main pipe	10 kg
Tank connection	PN16 DN150
Inlet connection	PN16 DN50
Materials	AISI 316, PTFE, Viton
Lubrication	Cleaning Media

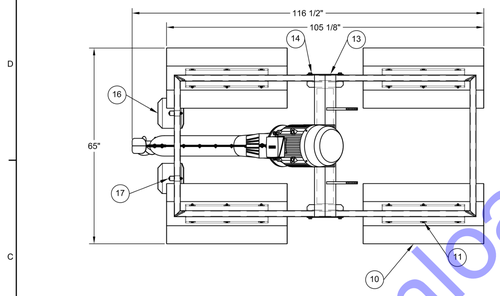

NOTES:
1. FLOATS ARE MOLDED POLYETHYLENE AND FILLED WITH TWO COMPONENT POLYURETHANE FOAM.
2. ELECTRICAL CABLE:
   RECOMMENDED SIZE - AWG# 6-4 COND.
3. POWER SECTION INCLUDES ITEMS 1, 2, 3, 4, 5, 6, 7 AND 8.
4. MOTOR SPECIFICATIONS:
   30 HP, 460 VOLT, 3 PHASE, 60 HERTZ, 1800 RPM, TEFC, 1.15 SERVICE FACTOR, CLASS "F" INSULATION, CONTINUOUS DUTY, CORROSION RESISTANT PAINT.
5. WEIGHTS:
   POWER SECTION: 425 LBS.
   FLOAT/FRAME (COMPLETE): 525 LBS.
   TOTAL WEIGHT: 950 LBS.
   RESERVE BUOYANCY: 904 LBS.
6. SHIPPED AS:
   FLOAT/FRAME ASSEMBLY (1)
   SUPPORT LEGS (2)
   POWER SECTION (1)
   ASSEMBLY HARDWARE
7. LIFT POINTS ARE PROVIDED AT THE CORNERS OF THE FLOAT/FRAME. A 4 POINT LIFT HARNESS IS RECOMMENDED FOR LIFTING COMPLETE UNIT.

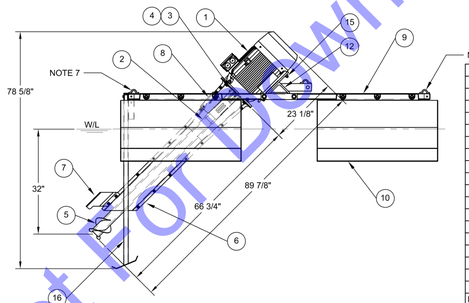

ITEM	QTY	PART NUMBER	DESCRIPTION	
17	4		SUPPORT LEG HARDWARE	316 SS
16	2		FRAME SUPPORT LEGS	304 SS
15	4		POWER SECTION MOUNTING HARDWARE	316 SS
14	4		MOTOR MOUNT HARDWARE	316 SS
13	2		BACKING PLATE, MOTOR MOUNT	304 SS
12	1		MOTOR MOUNT WELDMENT	304 SS
11	12		FLOAT HARDWARE	316 SS
10	4		FLOAT, MOLDED	PE
9	1		FRAME WELDMENT	304 SS
			FLOAT/FRAME ASSEMBLY	
8	1		FINGER GUARD AND HARDWARE	304 SS
7	1		ANTI VORTEX SHIELD	316 Ti SS
6	1		PROTECTIVE HOUSING WITH HARDWARE	FRP
5	1		PROPELLER	316 Ti SS
4	4		COUPLING HARDWARE	18-8 SS
3	1		CONE, COUPLING	STEEL
2	1		HOLLOW SHAFT/COUPLING	316 Ti SS/STEEL
1	1		MOTOR, 30HP, 460V	
			POWER SECTION, COMPLETE	

JOB NAME:
JOB LOCATION:
AQUA-AEROBIC SYSTEMS, INC. A Westwater Company
DO NOT SCALE DRAWING
UNLESS OTHERWISE SPECIFIED: TWO PLACE DECIMALS ± 0.01; THREE PLACE DECIMALS ± 0.005; ALL ANGLES ± 0.5°; ANSI
MATERIAL:
SIMILAR TO:
TYPE: OXYSTAR
DRAWN BY: JAK
CHECKED BY:
WEIGHT:
SHEET: 1 OF 1
REV | ERN / ECO | DATE | BY | REVISION DESCRIPTION
DRAWING NAME: AERATOR ASSEMBLY, 30 HP OXYSTAR
DRAWING NUMBER: 2802635
SCALE: NTS
SIZE: C

ASPIRATING AERATOR DETAIL

Copyright 2020 Aqua-Aerobic Systems, Inc. All Rights Reserved. This Drawing May Not Be Copied All Or In Part Without The Express Written Permission Of Aqua-Aerobic Systems, Inc.

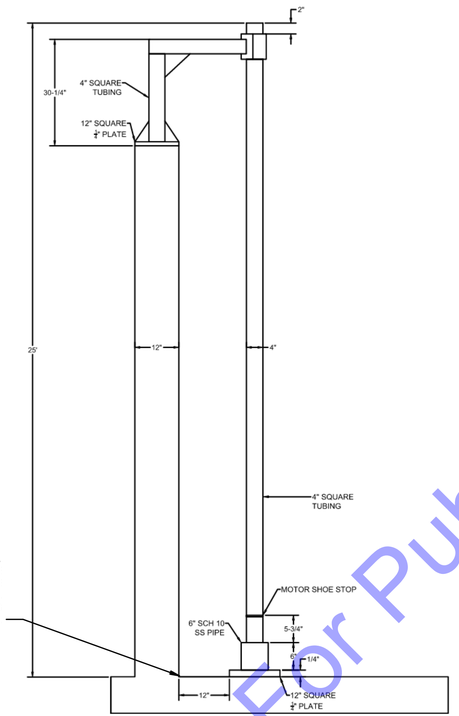

TANK MANUFACTURER WILL PROVIDE A CAST-IN-PLACE CONCRETE COVE ALONG THE BASE OF THE INTERIOR WALL. SUBMERSIBLE MIXER MOUNTING SHALL ACCOUNT FOR THIS.

MAST PROFILE

ISOMETRIC

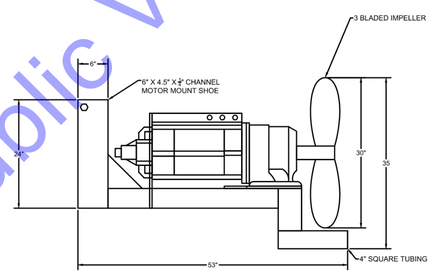

IMR-GR-75 SUBMERSIBLE MIXER
WEIGHT IS 500 POUNDS

MIXER PROFILE

SUBMERISBLE MIXER AND MAST ASSEMBLY DETAIL

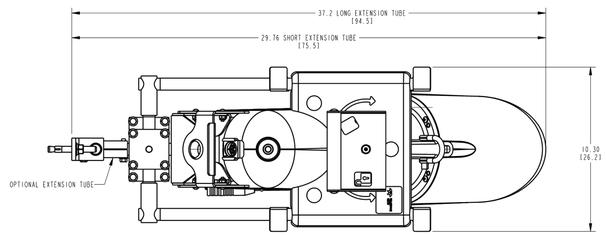

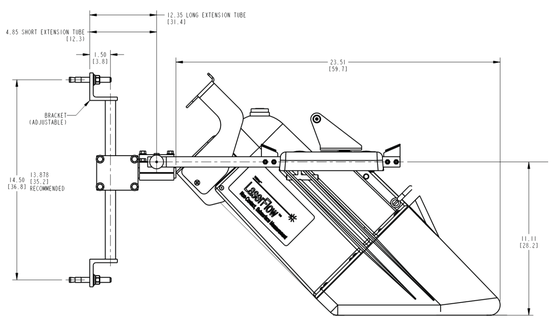

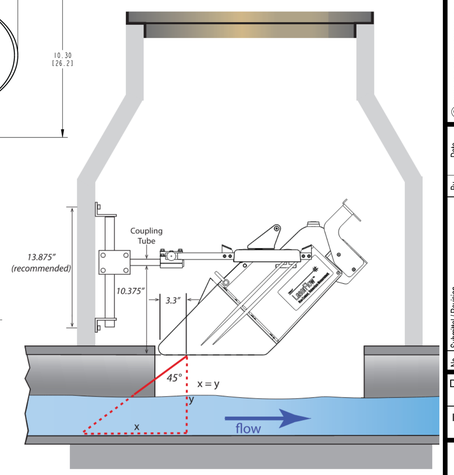

LASER FLOW METER DETAIL
EP-WWTP-FM-001

For Public Viewing Only-Not For Downloading

COMMONWEALTH ENGINEERS, INC.
A wealth of resources to master a common goal
https://commonwealthengineers.com/
OFFICE LOCATIONS IN:
INDIANAPOLIS, IN (2)
EVANSVILLE, IN
FORT WAYNE, IN
CROWN POINT, IN
BOWLING GREEN, KY
SOUTH BEND, IN

PRELIMINARY FOR REVIEW ONLY

Signature Date

TOWN OF NEWBURGH
WARRICK COUNTY, INDIANA

WASTEWATER TREATMENT PLANT REQUEST FOR FLOW EQUALIZATION TANK AND FOUNDATION

© 2024 BY COMMONWEALTH ENGINEERS, INC. ALL RIGHTS RESERVED. REPRODUCTION BY ANY METHOD IN WHOLE OR IN PART WITHOUT PERMISSION IS PROHIBITED

Indiana 811 Know what's below. 811 before you dig. 1-800-382-5544 (ITS THE LAW)

No.	Submittal / Revision	By	Date

Designed By:	Drawn By:	Checked By:
RJN	ANR	DOF
Issue Date: 10/03/25	Project No: S18005-41	Scale: AS SHOWN

NEW FLOW EQ TANK EQUIPMENT DETAILS

Drawing No:
D3-05
Sheet: 45 OF 161

Saved: 10/2/2025 12:24:46 PM Current Local File: Autodesk Docs://Newburgh New WWTP EQ and Headworks/Newburgh EQ Tank v.23.rvt

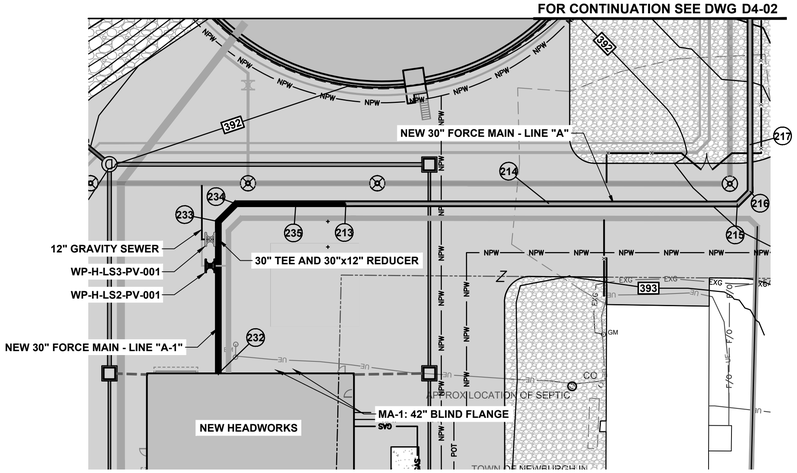

MANDATORY ALTERNATE NO. 1
PLAN - LINE "A-1" STA. 1+06 TO STA. 2+23

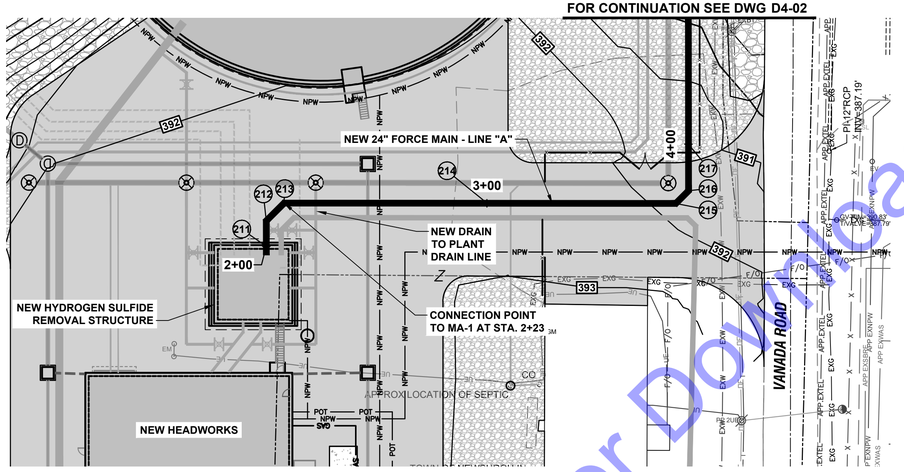

BASE BID
PLAN - LINE "A" STA. 2+00 TO STA. 4+50

NE LOCATION TABLE			
POINT	DESCRIPTION	NORTHING	EASTING
211	STA. 2+00 LINE "A"	981257.09	2875657.49
212	45° BEND LINE "A"	981267.17	2875657.49
213	45° BEND LINE "A" - STA. 2+20 LINE "A-1"	981274.21	2875664.55
214	STA. 3+00 LINE "A"	981274.15	2875744.85
215	45° BEND LINE "A"	981274.09	2875819.66
216	45° BEND LINE "A'	981279.08	2875824.66
217	STA. 4+00 LINE "A"	981297.55	2875824.66
232	STA. 1+06 LINE "A-1"	981207.06	2875614.14
233	45° BEND LINE "A-1"	981267.17	2875614.14
234	45° BEND LINE "A-1"	981274.21	2875621.20
235	STA. 2+00 LINE "A-1"	981274.21	2875644.80

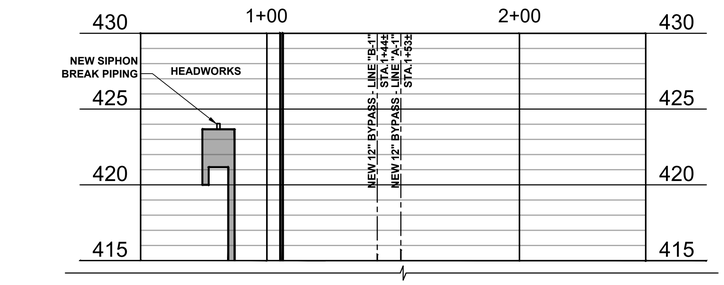

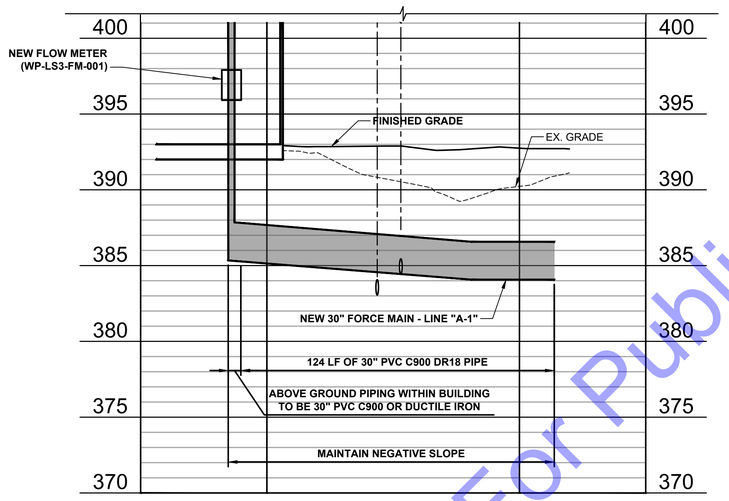

MANDATORY ALTERNATE NO. 1
PROFILE - LINE "A-1" STA. 1+06 TO STA. 2+23

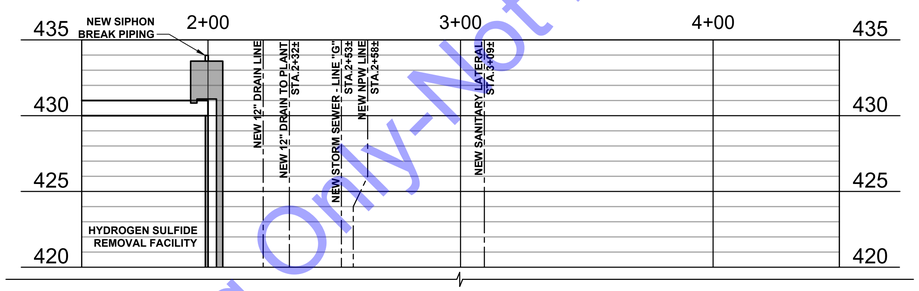

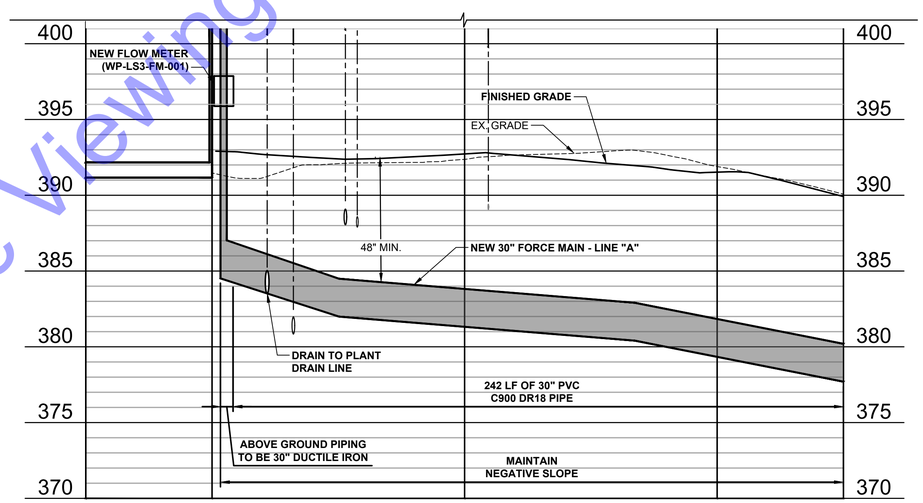

BASE BID
PROFILE - LINE "A" STA. 2+00 TO STA. 4+50

GENERAL NOTES

1. MANDATORY ALTERNATE 1 IS A DEDUCT. CHANGES INCLUDE REMOVING THE HYDROGEN SULFIDE (H2S) REMOVAL FACILITY, EXTENSION OF LIFT STATION NO. 2 & NO. 3 FORCE MAINS INTO THE NEW HEADWORKS, CAPPING 42" PIPE ON OUTSIDE OF HEADWORKS BUILDING, INSTALLING THE FLOW METERS FOR LIFT STATION NO. 2 & NO. 3 THREE FEET FROM THE FLOOR WITHIN THE HEADWORKS, AND REMOVING ALL ANCILLARY PORTIONS OF WORK ASSOCIATED WITH THE H2S REMOVAL FACILITY.
2. THE CONTRACT DRAWINGS INDICATE THE EXTENT AND THE GENERAL LOCATION AND ARRANGEMENT OF EQUIPMENT, FIXTURES, AND PIPING. CONTRACTOR SHALL STUDY PLANS AND DETAILS AND SHALL COOPERATE WITH ALL OTHER TRADES TO PREVENT CONFLICT AND INTERFERENCE AS TO SPACE REQUIREMENTS. FIXTURES, EQUIPMENT, AND PIPING SHALL BE LOCATED TO AVOID INTERFERENCE WITH MECHANICAL OR STRUCTURAL FEATURES. ANY RELOCATION OF MATERIALS OR EQUIPMENT REQUIRED DUE TO THE FAILURE OF THE CONTRACTOR TO PERFORM SUCH COORDINATION BETWEEN THE TRADES OR HAVE THE TRADES PERFORM SUCH COORDINATION SHALL BE AT THE SOLE COST OF THE CONTRACTOR WITH NO TIME ALLOWED FOR THE CORRECTED WORK.
3. DRAWINGS ARE DIAGRAMMATIC ONLY. COORDINATION WITH OTHER TRADES, LAYOUT, ROUTING, AND FITTINGS NECESSARY ARE THE RESPONSIBILITY OF THE CONTRACTOR.
4. FORCE MAIN LOCATE BOXES AND MARKERS SHALL BE INSTALLED IN THE GENERAL LOCATIONS SHOWN ON THE PLANS, AT INTERVALS NOT TO EXCEED 500 FEET, AT EACH BEND, AT EACH AIR RELEASE VALVE STRUCTURE AND FORCE MAIN DISCHARGE STRUCTURES.
5. CONTRACTOR SHALL PROVIDE FITTINGS WHERE FORCE MAIN HORIZONTAL AND VERTICAL ALIGNMENT EXCEEDS PIPE MANUFACTURE'S MAXIMUM DEFLECTION. CONTRACTOR SHALL INSTALL NECESSARY FITTINGS AS REQUIRED TO MAKE ALL BENDS.
6. GRANULAR BACKFILL SHALL BE IMPLEMENTED PER DS-31.

HORIZONTAL SCALE: 1" = 30'-0"
VERTICAL SCALE: 1"=5'

For Public Viewing Only-Not For Download

COMMONWEALTH ENGINEERS, INC.
A wealth of resources to master a common goal.
https://commonwealthengineers.com/

RUDOLPH J. NOLTICH
REGISTERED
No. PE19400077
INDIANA
PROFESSIONAL ENGINEER
Signature 10/03/2025 Date

TOWN OF NEWBURGH
WARRICK COUNTY, INDIANA

WASTEWATER TREATMENT PLANT FLOW EQ BASIN

© 2025 BY COMMONWEALTH ENGINEERS, INC. ALL RIGHTS RESERVED. REPRODUCTION BY ANY METHOD, IN WHOLE OR IN PART WITHOUT PERMISSION IS PROHIBITED

Know what's below. 811 before you dig.
1-800-382-5544
(ITS THE LAW)

No.	Submittal / Revision	By	Date

Designed By:	Drawn By:	Checked By:
DOF	DMJ	ETP
Issue Date:	Project No:	Scale:
10/03/25	S18005-041	AS SHOWN

NEW LS NO. 3 FORCE MAIN SEWER PLAN AND PROFILE - LINE "A"

Drawing No:
D4-01
Sheet: 46 OF 161

File: Z:\SHARED\IN CLIENTS M-Z\NEWBURGH\S18005 ON CALL SEWER ENG SVCS\041 WWTP FLOW EQ BASIN\06 CADA CURRENT FILES\1 DRAWINGS\10-PLAN & PROFILE - LINE A.DWG
Saved: 10/2/2025 11:50:24 AM Plotted: 10/2/2025 1:59:28 PM Current User: Drew Jenkins LastSavedBy: djenkins

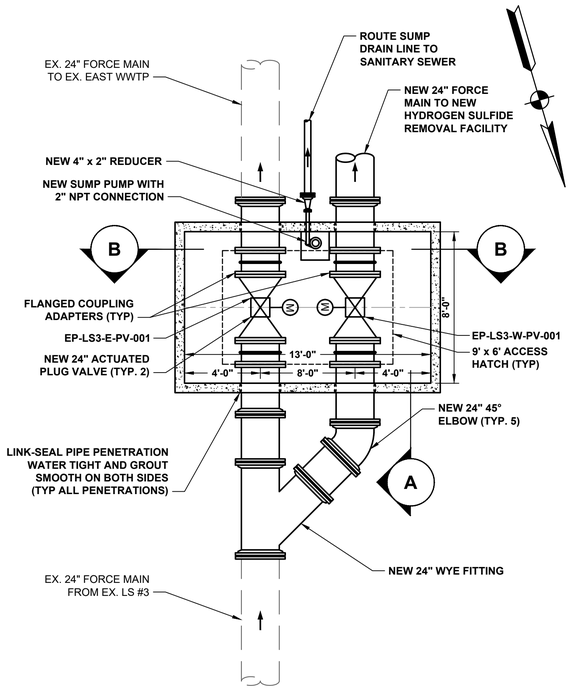

VALVE VAULT LS#3 FM DETAIL

SCALE: 1/4"=1'-0"

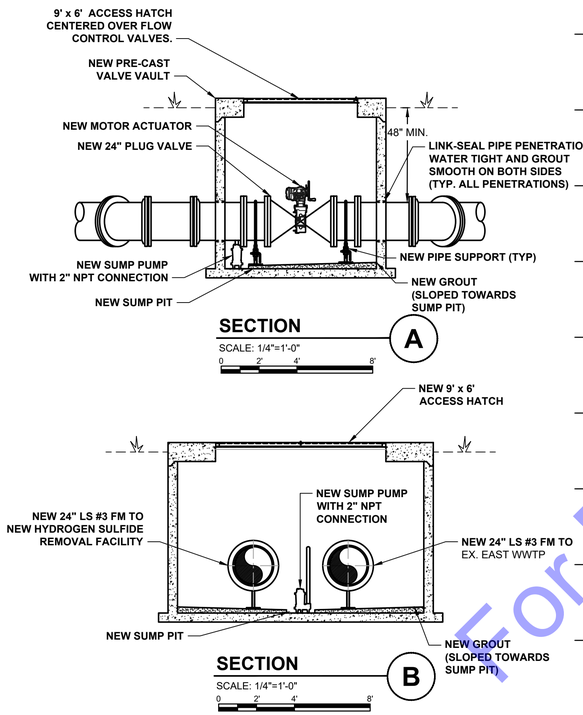

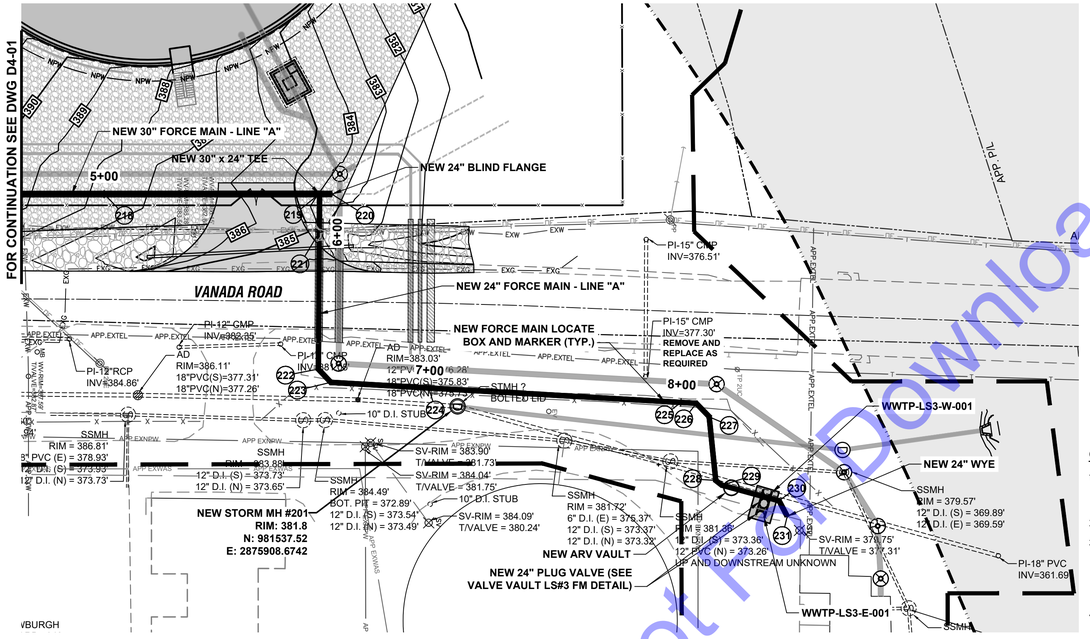

PLAN - LINE "A" STA. 4+50 TO STA. 8+70

NE LOCATION TABLE			
POINT	DESCRIPTION	NORTHING	EASTING
218	STA. 5+00 LINE "A"	981397.55	2875824.61
219	TEE LINE "A"	981482.85	2875824.57
220	BLIND FLANGE LINE "A"	981487.85	2875824.57
221	STA. 6+00 LINE "A"	981482.75	2875839.67
222	45° BEND LINE "A"	981482.37	2875893.90
223	45° BEND LINE "A"	981487.33	2875899.16
224	STA. 7+00 LINE "A"	981526.07	2875901.39
225	STA. 8+00 LINE "A"	981625.91	2875907.10
226	45° BEND LINE "A"	981632.01	2875907.45
227	45° BEND LINE "A"	981637.12	2875912.72
228	45° BEND LINE "A"	981639.72	2875937.99
228	45° BEND LINE "A"	981617.02	2875931.78
229	22.5° BEND LINE "A"	981642.09	2875939.83
230	45° BEND LINE "A"	981664.80	2875946.03
231	WYE - STA. 8+74 LINE "A"	981668.02	2875952.17

GENERAL NOTES

1. IF H-20 CONTINUOUS LOAD RATED CERTIFICATION CANNOT BE PROVIDED FOR THE HATCH, CONTRACTOR SHALL PROVIDE SIX FOLDABLE/REMOVABLE BOLLARDS AT THE LIFT STATION NO. 3 VALVE VAULT. ORIENTATION OF BOLLARDS SHALL BE PER OWNER PREFERENCE.
2. FINAL ORIENTATION OF HATCHES AND BOLLARDS ARE SUBJECT TO OWNER APPROVAL.
3. CONTRACTOR SHALL VERIFY PRECAST VALVE VAULT BOX IS SIZED PROPERLY TO ALLOW FOR INSTALLATION OF ALL REQUIRED HATCHES WHILE STILL MAINTAINING THE STRUCTURAL INTEGRITY OF VALVE VAULT TOP SLAB. ANY MODIFICATIONS IN SIZING OF VALVE VAULT TO MAINTAIN STRUCTURAL INTEGRITY SHALL BE MADE AT NO ADDITIONAL COST TO OWNER.
4. CONTRACTOR TO PROVIDE BALLAST FOR VAULT AND SUPPORTING BALLAST CALCULATIONS TO ENSURE VAULT CAN HANDLE FULL SUBMERGENCE CONDITIONS.
5. GENERAL NOTES FROM D4-01 APPLY.
6. GRANULAR BACKFILL SHALL BE IMPLEMENTED PER DS-31.

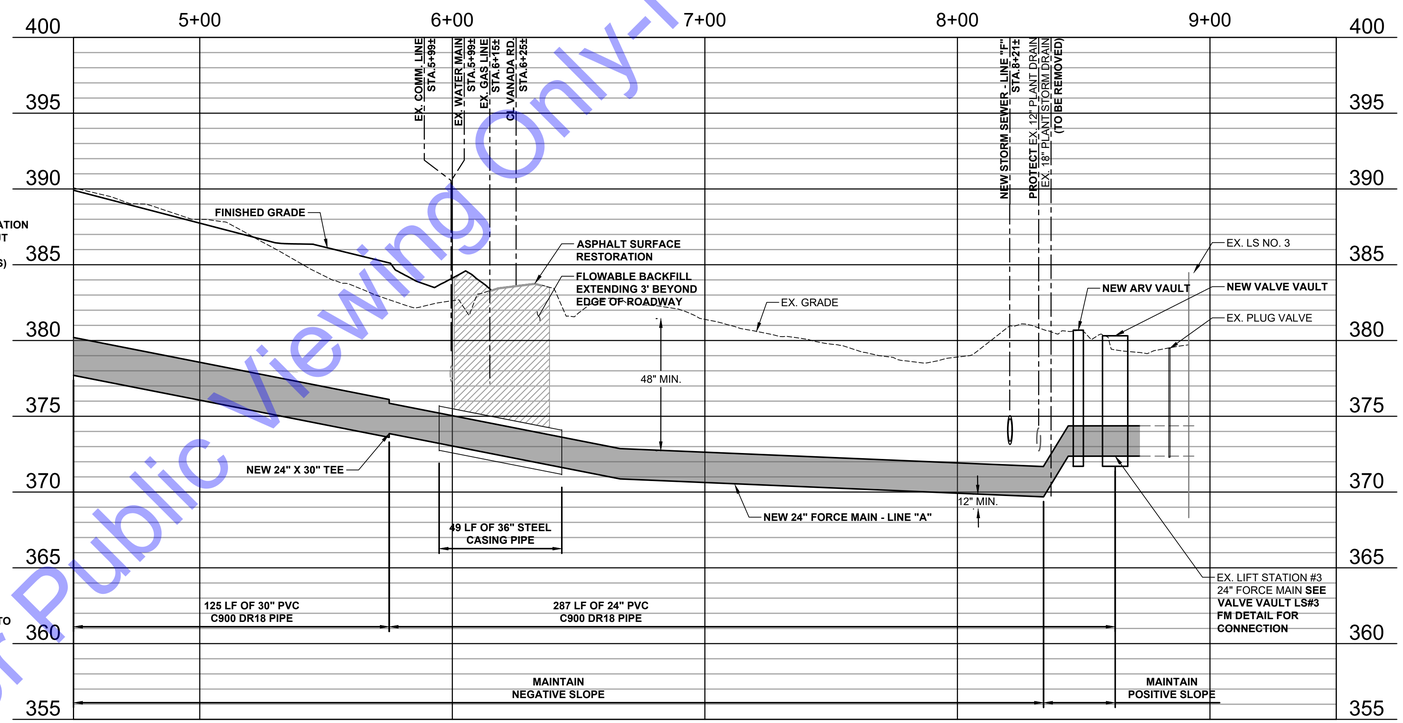

PROFILE - LINE "A" STA. 4+50 TO STA. 8+70

HORIZONTAL SCALE: 1" = 30'-0"

0 15' 30' 60' 90'

VERTICAL SCALE: 1"=5'

5' 0

For Public Viewing Only-Not For Downloading

COMMONWEALTH ENGINEERS, INC.
A wealth of resources to master a common goal.
https://commonwealthengineers.com/

RUDOLPH J. NOLTICH IV
REGISTERED
No. PE19400077
INDIANA
PROFESSIONAL ENGINEER

Signature 10/03/2025 Date

TOWN OF NEWBURGH
WARRICK COUNTY, INDIANA

WASTEWATER TREATMENT
PLANT FLOW EQ BASIN

© 2025 BY COMMONWEALTH ENGINEERS, INC. ALL RIGHTS RESERVED. REPRODUCTION BY ANY METHOD, IN WHOLE OR IN PART WITHOUT PERMISSION IS PROHIBITED

Indiana 811 Know what's below. 811 before you dig. 1-800-382-5544 (ITS THE LAW)

No.	Submittal / Revision	By	Date

Designed By:	Drawn By:	Checked By:
DOF	DMJ	ETP
Issue Date: 10/03/25	Project No: S18005-041	Scale: AS SHOWN

NEW LS NO. 3 FORCE MAIN SEWER PLAN AND PROFILE - LINE "A"

Drawing No:
D4-02
Sheet: 47 OF 161

File: Z:\SHARED\IN CLIENTS M-Z\NEWBURGH\S18005 ON CALL SEWER ENG S\VCS041 WWTP FLOW EQ BASIN\06 CADA CURRENT FILES\1 DRAWINGS\10-PLAN & PROFILE - LINE A.DWG
Saved: 10/2/2025 11:50:24 AM Plotted: 10/2/2025 2:00:01 PM Current User: Drew Jenkins LastSavedBy: djenkins

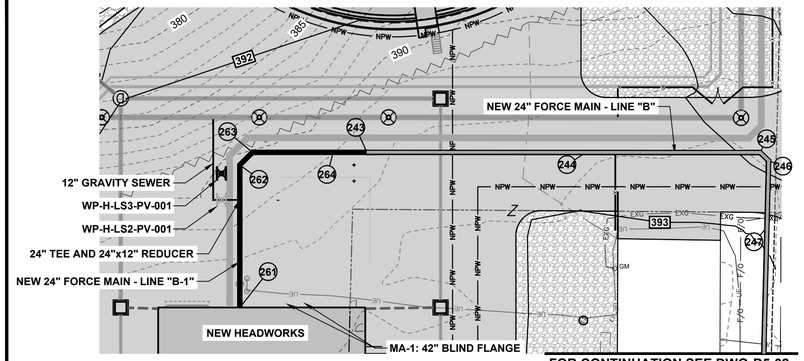

MANDATORY ALTERNATE NO. 1
PLAN - LINE "B-1" STA. 1+05 TO STA. 2+13

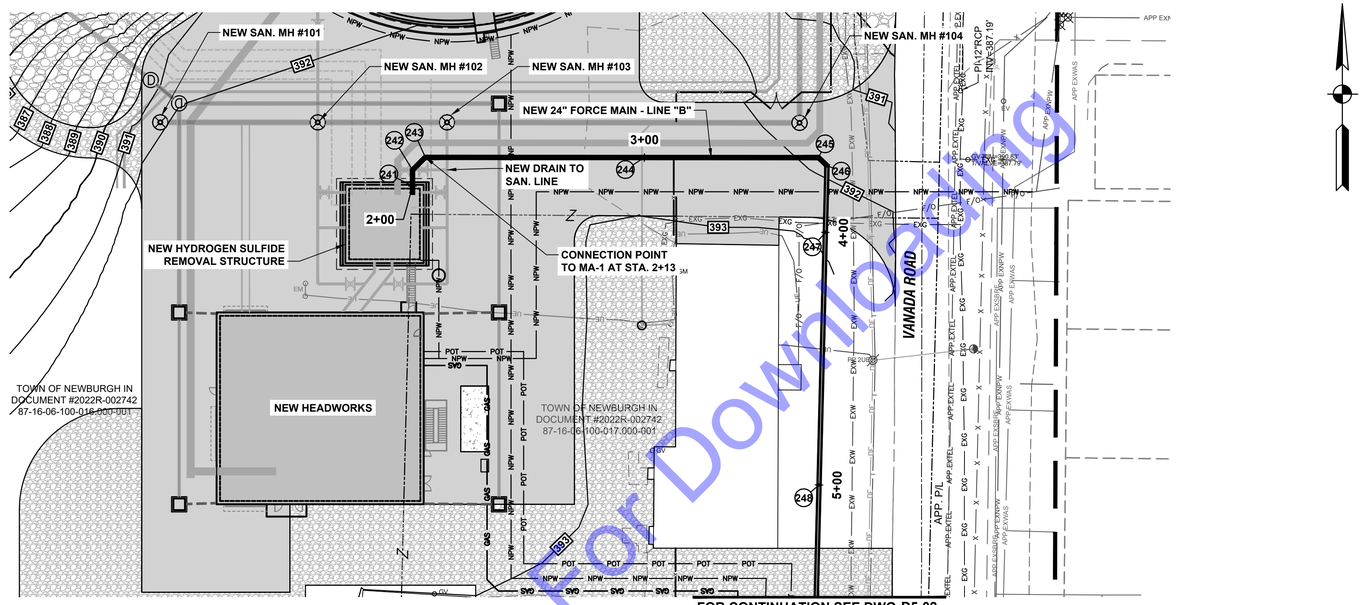

BASE BID
PLAN - LINE "B" STA. 2+00 TO STA. 5+50

###	NE LOCATION TABLE		
POINT	DESCRIPTION	NORTHING	EASTING
241	STA. 2+00 LINE "B"	981257.09	2875663.41
242	45° BEND LINE "B"	981263.46	2875663.38
243	45° BEND LINE "B" - STA. 2+13 LINE "B-1"	981268.46	2875668.42
244	STA. 3+00 LINE "B"	981268.39	2875755.22
245	45° BEND LINE "B"	981268.34	2875824.22
246	45° BEND LINE "B"	981265.15	2875827.52
247	STA. 4+00 LINE "B"	981238.75	2875826.86
248	STA. 5+00 LINE "B"	981138.78	2875824.37
261	STA. 1+05 LINE "B-1"	981207.06	2875618.17
262	45° BEND LINE "B-1"	981263.46	2875618.16
263	45° BEND LINE "B-1"	981268.46	2875623.18
264	STA. 2+00 LINE "B-1"	981268.46	2875655.13

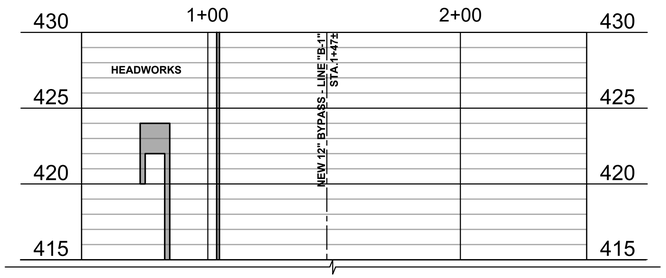

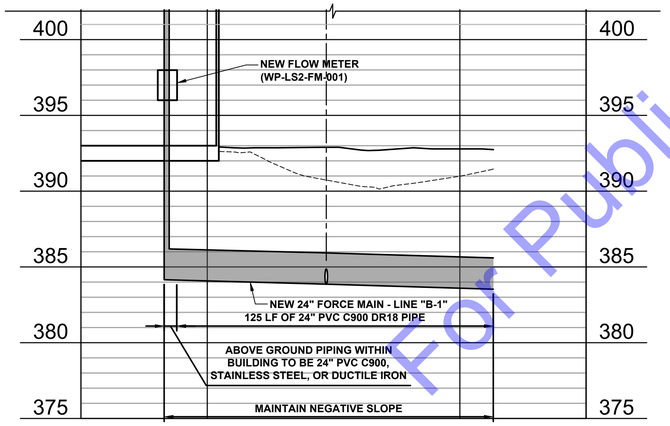

MANDATORY ALTERNATE NO. 1
PROFILE - LINE "B-1" STA. 1+05 TO STA. 2+13

GENERAL NOTES

1. MANDATORY ALTERNATE 1 IS A DEDUCT. CHANGES TO WORK INCLUDE REMOVING THE HYDROGEN SULFIDE (H2S) REMOVAL FACILITY, EXTENSION OF LIFT STATION NO. 2 & NO. 3 FORCE MAINS INTO THE NEW HEADWORKS, CAPPING 42" PIPE ON OUTSIDE OF HEADWORKS BUILDING, INSTALLING THE FLOW METERS FOR LIFT STATION NO. 2 & NO. 3 THREE FEET FROM THE FLOOR WITHIN THE HEADWORKS, AND REMOVING ALL ANCILLARY PORTIONS OF WORK ASSOCIATED WITH THE H2S REMOVAL FACILITY.
2. THE CONTRACT DRAWINGS INDICATE THE EXTENT AND THE GENERAL LOCATION AND ARRANGEMENT OF EQUIPMENT, FIXTURES, AND PIPING. CONTRACTOR SHALL STUDY PLANS AND DETAILS AND SHALL COOPERATE WITH ALL OTHER TRADES TO PREVENT CONFLICT AND INTERFERENCE AS TO SPACE REQUIREMENTS. FIXTURES, EQUIPMENT, AND PIPING SHALL BE LOCATED TO AVOID INTERFERENCE WITH MECHANICAL OR STRUCTURAL FEATURES. ANY RELOCATION OF MATERIALS OR EQUIPMENT REQUIRED DUE TO THE FAILURE OF THE CONTRACTOR TO PERFORM SUCH COORDINATION BETWEEN THE TRADES OR HAVE THE TRADES PERFORM SUCH COORDINATION SHALL BE AT THE SOLE COST OF THE CONTRACTOR WITH NO TIME ALLOWED FOR THE CORRECTED WORK.
3. DRAWINGS ARE DIAGRAMMATIC ONLY. COORDINATION WITH OTHER TRADES, LAYOUT, ROUTING, AND FITTINGS NECESSARY ARE THE RESPONSIBILITY OF THE CONTRACTOR.
4. FORCE MAIN LOCATE BOXES AND MARKERS SHALL BE INSTALLED IN THE GENERAL LOCATIONS SHOWN ON THE PLANS, AT INTERVALS NOT TO EXCEED 500 FEET, AT EACH BEND, AT EACH AIR RELEASE VALVE STRUCTURE AND FORCE MAIN DISCHARGE STRUCTURES.
5. CONTRACTOR SHALL PROVIDE FITTINGS WHERE FORCE MAIN HORIZONTAL AND VERTICAL ALIGNMENT EXCEEDS PIPE MANUFACTURE'S MAXIMUM DEFLECTION. CONTRACTOR SHALL INSTALL NECESSARY FITTINGS AS REQUIRED TO MAKE ALL BENDS.
6. GRANULAR BACKFILL SHALL BE IMPLEMENTED PER DS-31.

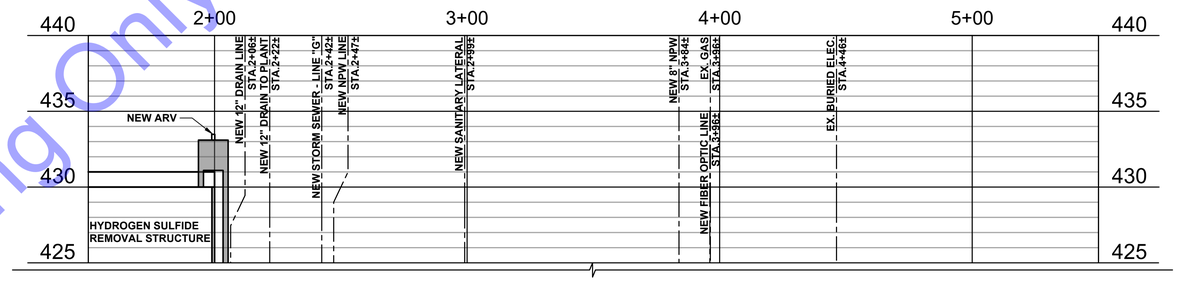

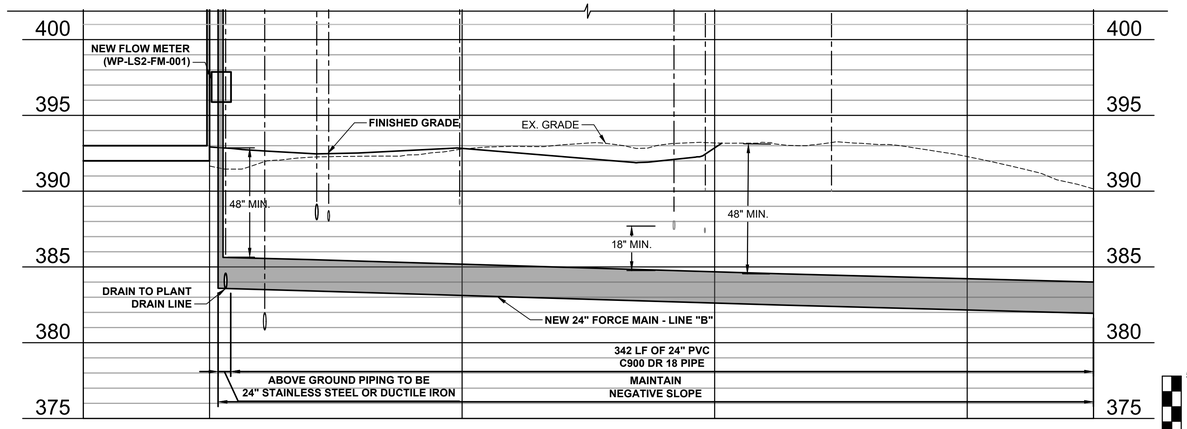

BASE BID
PROFILE - LINE "B" STA. 2+00 TO STA. 5+50

HORIZONTAL SCALE: 1" = 30'-0"
0 15' 30' 60' 90'
VERTICAL SCALE: 1"=5'
5' 0

For Public Bidding Only-Not For Download

COMMONWEALTH ENGINEERS, INC.
A wealth of resources to master a common goal.
https://commonwealthengineers.com/

RUDOLPH J. NOLTICH
REGISTERED
No. PE19400077
INDIANA
PROFESSIONAL ENGINEER
Signature 10/03/2025 Date

TOWN OF NEWBURGH
WARRICK COUNTY, INDIANA

WASTEWATER TREATMENT
PLANT FLOW EQ BASIN

© 2025 BY COMMONWEALTH ENGINEERS, INC. ALL RIGHTS RESERVED. REPRODUCTION BY ANY METHOD, IN WHOLE OR IN PART WITHOUT PERMISSION IS PROHIBITED

Indiana 811 Know what's below. 811 before you dig. 1-800-382-5544 (ITS THE LAW)

No.	Submittal / Revision	By	Date

Designed By:	Drawn By:	Checked By:
DOF	DMJ	ETP
Issue Date: 10/03/25	Project No: S18005-041	Scale: AS SHOWN

NEW LS NO. 2 FORCE MAIN SEWER PLAN AND PROFILE - LINE "B"

Drawing No:
D5-01
Sheet: 48 OF 161

File: Z:\SHARED\IN CLIENTS M-Z\NEWBURGH\S18005 ON CALL SEWER ENG SVCS\041 WWTP FLOW EQ BASIN\06 CADA CURRENT FILES\1 DRAWINGS\11-PLAN & PROFILE - LINE B.DWG
Saved: 10/2/2025 11:49:23 AM Plotted: 10/2/2025 2:01:15 PM Current User: Drew Jenkins LastSavedBy: djenkins

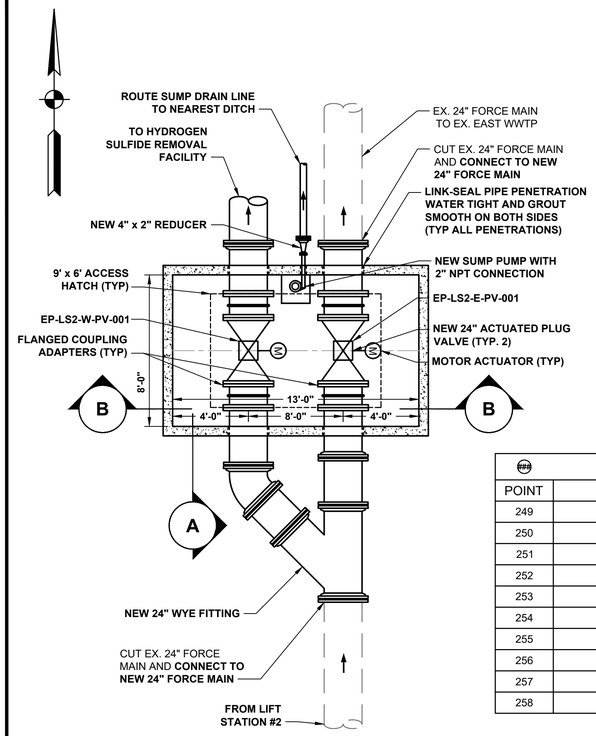

VALVE VAULT LS#2 FM DETAIL

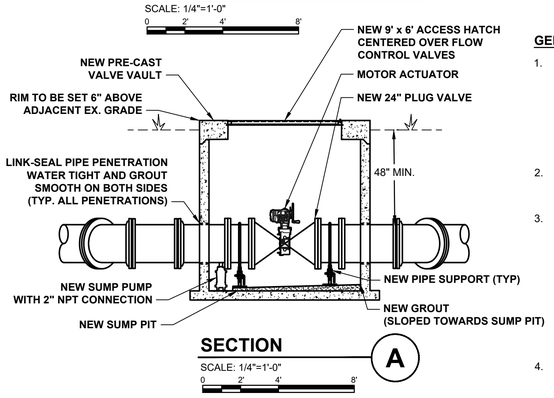

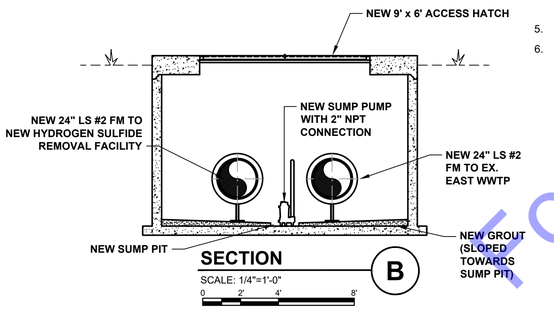

NE LOCATION TABLE			
POINT	DESCRIPTION	NORTHING	EASTING
249	STA. 6+00 LINE "B"	981038.81	2875821.87
250	STA. 7+00 LINE "B"	980938.84	2875819.37
251	STA. 8+00 LINE "B"	980838.88	2875816.87
252	STA. 9+00 LINE "B"	980738.91	2875814.37
253	45° BEND LINE "B"	980721.47	2875813.94
254	45° BEND LINE "B"	980718.27	2875817.05
255	45° BEND LINE "B"	980717.37	2875876.93
256	45° BEND LINE "B"	980714.32	2875879.87
257	45° BEND LINE "B"	980693.86	2875879.43
258	WYE - STA. 10+14 LINE "B"	980688.49	2875884.96

GENERAL NOTES

1. IF H-20 CONTINUOUS LOAD RATED CERTIFICATION CANNOT BE PROVIDED FOR THE HATCH, CONTRACTOR SHALL PROVIDE SIX FOLDABLE/REMOVABLE BOLLARDS AT THE LIFT STATION NO. 2 VALVE VAULT. ORIENTATION OF BOLLARDS SHALL BE PER OWNER PREFERENCE.
2. FINAL ORIANTATION OF HATCHES AND BOLLARDS ARE SUBJECT TO OWNER APPROVAL.
3. CONTRACTOR SHALL VERIFY PRECAST VALVE VAULT BOX IS SIZED PROPERLY TO ALLOW FOR INSTALLATION OF ALL REQUIRED HATCHES WHILE STILL MAINTAINING THE STRUCTURAL INTEGRITY OF VALVE VAULT TOP SLAB. ANY MODIFICATIONS IN SIZING OF VALVE VAULT TO MAINTAIN STRUCTURAL INTEGRITY SHALL BE MADE AT NO ADDITIONAL COST TO OWNER.
4. CONTRACTOR TO PROVIDE BALLAST FOR VAULT AND SUPPORTING BALLAST CALCULATIONS TO ENSURE VAULT CAN HANDLE FULL SUBMERGENCE CONDITIONS.
5. GENERAL NOTES FROM D5-01 APPLY.
6. GRANULAR BACKFILL SHALL BE IMPLEMENTED PER DS-31.

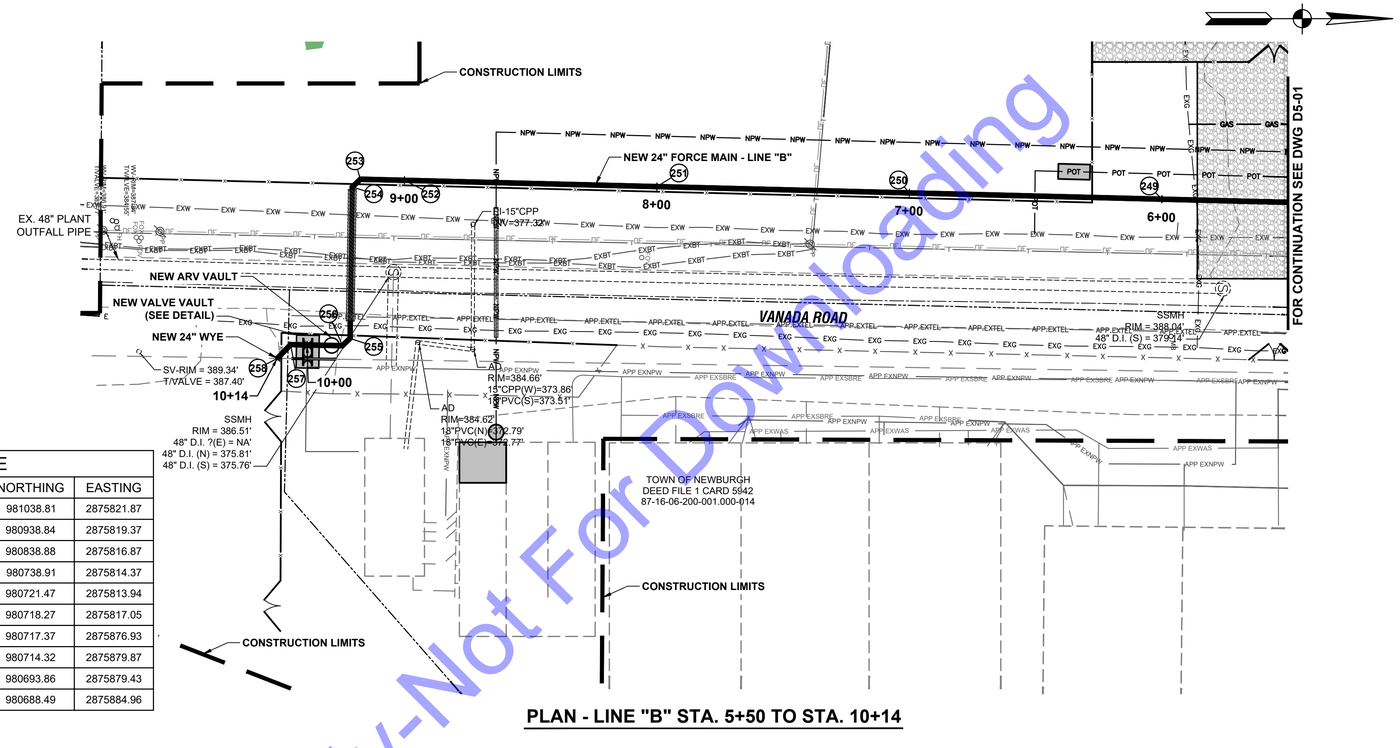

PLAN - LINE "B" STA. 5+50 TO STA. 10+14

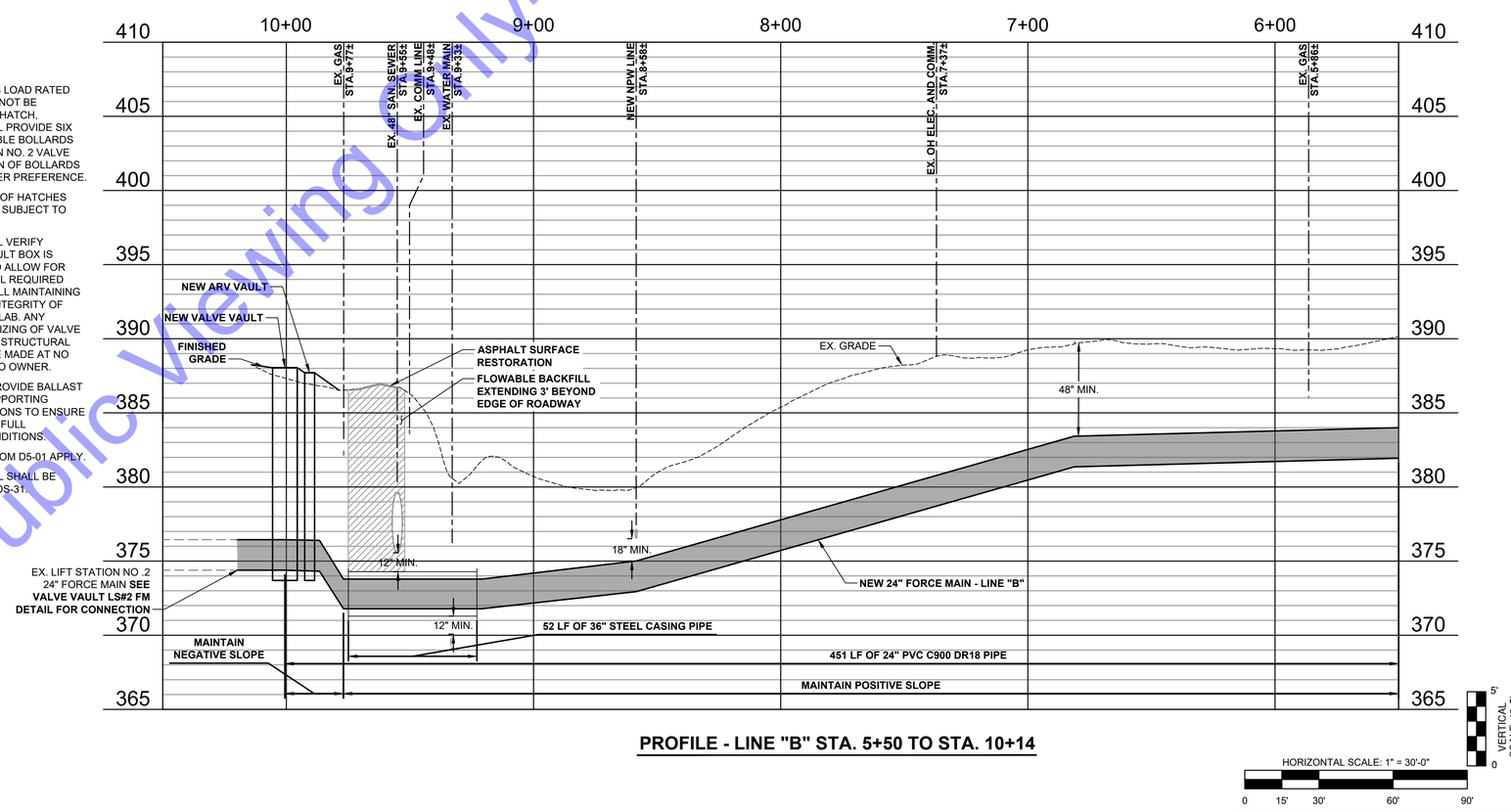

PROFILE - LINE "B" STA. 5+50 TO STA. 10+14

For Public Viewing Only-Not For Downloading

COMMONWEALTH ENGINEERS, INC.
A wealth of resources to master a common goal.
https://commonwealthengineers.com/
RUDOLPH J. NOLTICH
REGISTERED
No. PE19400077
INDIANA
PROFESSIONAL ENGINEER
Signature
10/03/2025
Date

TOWN OF NEWBURGH
WARRICK COUNTY, INDIANA

WASTEWATER TREATMENT
PLANT FLOW EQ BASIN

© 2025 BY COMMONWEALTH ENGINEERS, INC. ALL RIGHTS RESERVED. REPRODUCTION BY ANY METHOD, IN WHOLE OR IN PART WITHOUT PERMISSION IS PROHIBITED

Know what's below. 811 before you dig.
1-800-382-5544
(ITS THE LAW)

No.	Submittal / Revision	By	Date

Designed By:	Drawn By:	Checked By:
DOF	DMJ	ETP
Issue Date: 10/03/25	Project No: S18005-041	Scale: AS SHOWN

NEW LS NO. 2 FORCE MAIN SEWER PLAN AND PROFILE - LINE "B"

Drawing No:
D5-02
Sheet: 49 OF 161

File: Z:\SHARED\IN CLIENTS M-Z\NEWBURGH\S18005 ON CALL SEWER ENG SVCS\041 WWTP FLOW EQ BASIN\06 CADA CURRENT FILES\01 DRAWINGS\11-PLAN & PROFILE - LINE B.DWG
Saved: 10/2/2025 11:49:23 AM Plotted: 10/2/2025 2:01:47 PM CurrentUser: Drew Jenkins LastSavedBy: djenkins

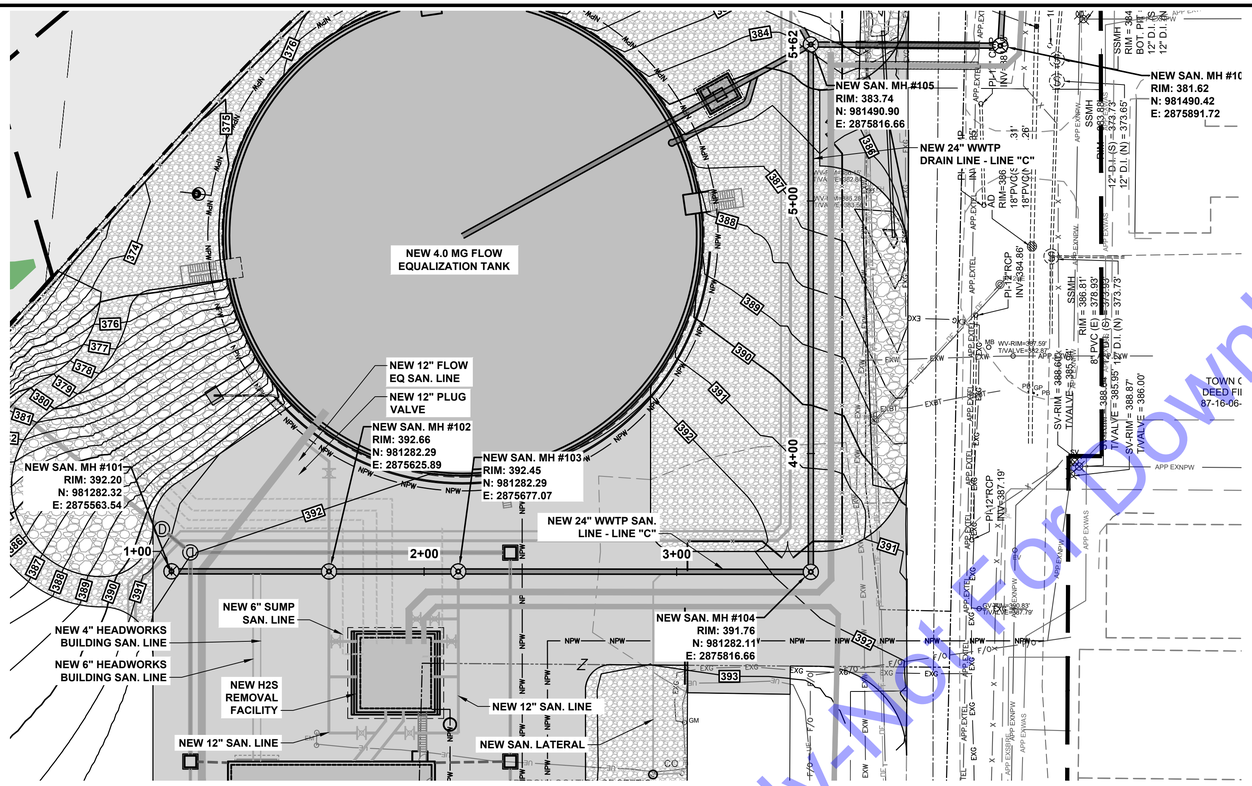

PLAN - LINE "C" STA. 1+00 TO STA. 5+62

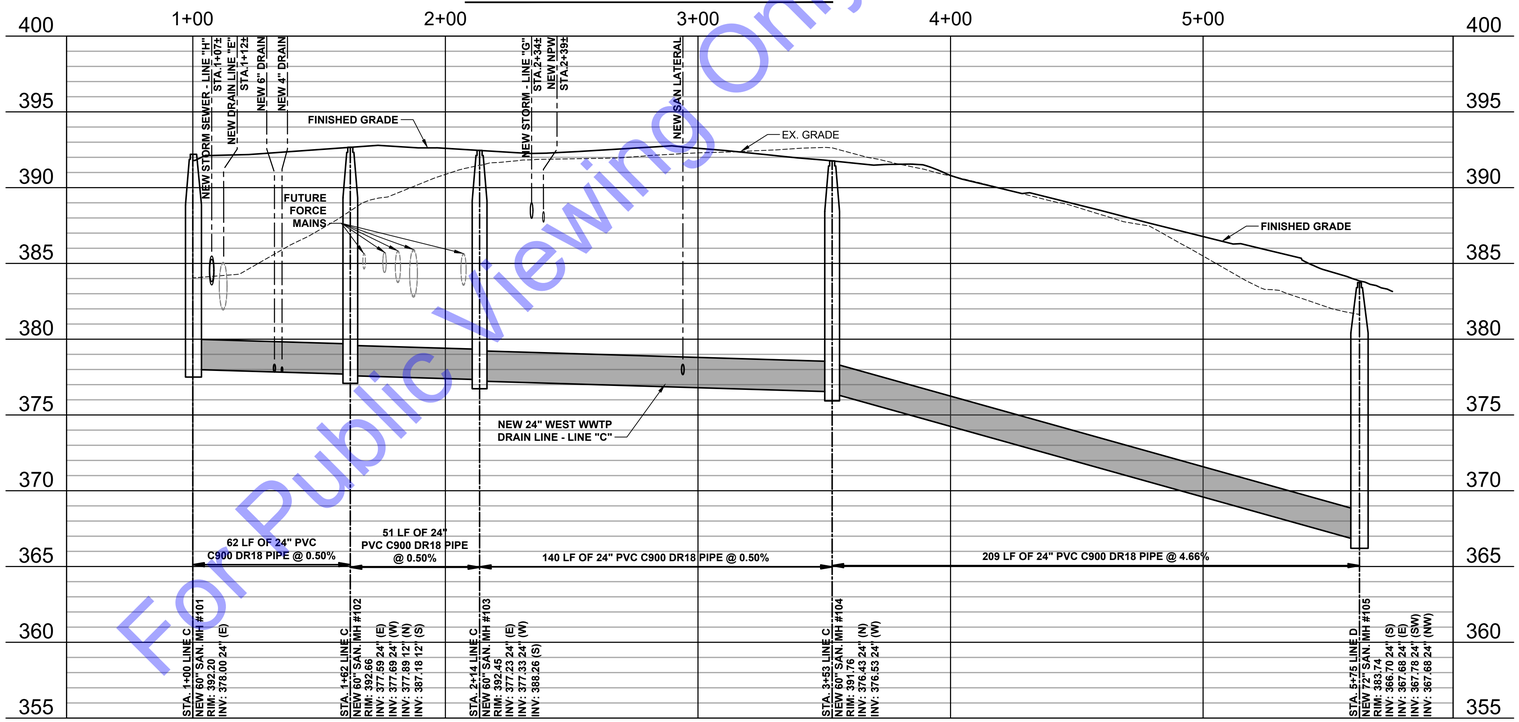

PROFILE - LINE "C" STA. 1+00 TO STA. 5+62

HORIZONTAL SCALE: 1" = 30'-0"
0 15' 30' 60' 90'

VERTICAL SCALE: 1"=5'
5' 0

GENERAL NOTES

1. GRANULAR BACKFILL SHALL BE IMPLEMENTED PER DS-31.

For Public Viewing Only-Not For Downloading

COMMONWEALTH ENGINEERS, INC.
A wealth of resources to master a common goal.
https://commonwealthengineers.com/

RUDOLPH J. NOVLICH
REGISTERED
No. PE19400077
INDIANA PROFESSIONAL ENGINEER

Signature 10/03/2025 Date

TOWN OF NEWBURGH
WARRICK COUNTY, INDIANA

WASTEWATER TREATMENT PLANT FLOW EQ BASIN

© 2025 BY COMMONWEALTH ENGINEERS, INC. ALL RIGHTS RESERVED. REPRODUCTION BY ANY METHOD, IN WHOLE OR IN PART WITHOUT PERMISSION IS PROHIBITED

Indiana 811 Know what's below. 811 before you dig. 1-800-382-5544 (ITS THE LAW)

No.	Submittal / Revision	By	Date

Designed By:	Drawn By:	Checked By:
DOF	DMJ	ETP
Issue Date: 10/03/25	Project No: S18005-041	Scale: AS SHOWN

NEW GRAVITY SEWER PLAN AND PROFILE - LINE "C"

Drawing No: **D6-01**

Sheet: 50 OF 161

File: Z:\SHARED\IN CLIENTS M-Z\NEWBURGH\S18005 ON CALL SEWER ENG SVCS\041 WWTP FLOW EQ BASIN\06 CADA CURRENT FILES\1 DRAWINGS\12-PLAN & PROFILE - LINE C.DWG
Saved: 10/1/2025 4:00:22 PM Plotted: 10/2/2025 2:02:19 PM Current User: Drew Jenkins LastSavedBy: djenkins

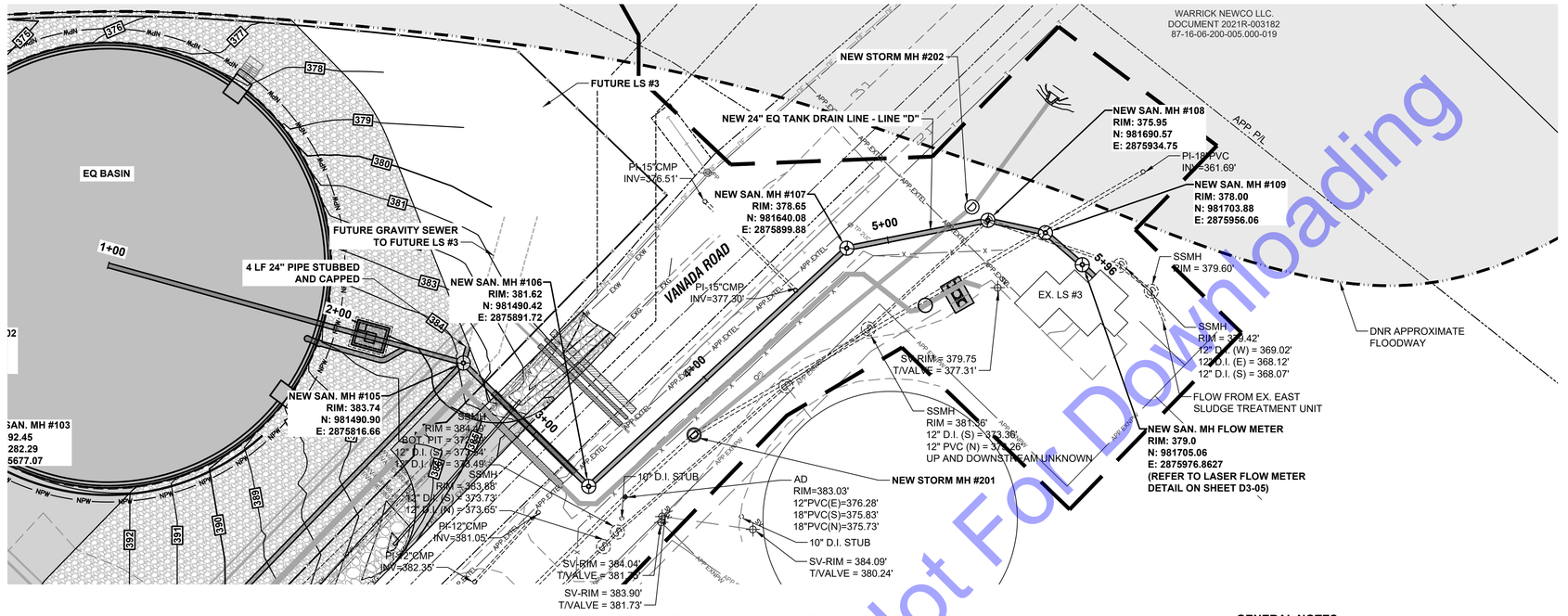
WARRICK NEWCO LLC.
DOCUMENT 2021R-003182
87-16-06-200-005.000-019
EQ BASIN
FUTURE LS #3
NEW 24" EQ TANK DRAIN LINE - LINE "D"
NEW STORM MH #202
NEW SAN. MH #108
RIM: 375.95
N: 981690.57
E: 2875934.75
PI-18"PVC
INV=361.69'
NEW SAN. MH #109
RIM: 378.00
N: 981703.88
E: 2875956.06
PI-15"CMP
INV=376.51'
NEW SAN. MH #107
RIM: 378.65
N: 981640.08
E: 2875899.88
VANDA ROAD
PI-15"CMP
INV=377.30'
FUTURE GRAVITY SEWER
TO FUTURE LS #3
4 LF 24" PIPE STUBBED
AND CAPPED
NEW SAN. MH #106
RIM: 381.62
N: 981490.42
E: 2875891.72
NEW SAN. MH #105
RIM: 383.74
N: 981490.90
E: 2875816.66
1+00
2+00
3+00
4+00
5+00
5+96
EX. LS #3
SSMH
RIM = 379.60'
SSMH
RIM = 379.42'
12" D.I. (W) = 369.02'
12" D.I. (E) = 368.12'
12" D.I. (S) = 368.07'
DNR APPROXIMATE
FLOODWAY
SSMH
RIM = 379.75
T/VALVE = 377.31'
FLOW FROM EX. EAST
SLUDGE TREATMENT UNIT
SSMH
RIM = 381.36'
12" D.I. (S) = 373.36'
12" PVC (N) = 373.26'
UP AND DOWNSTREAM UNKNOWN
NEW SAN. MH FLOW METER
RIM: 379.0
N: 981705.06
E: 2875976.8627
(REFER TO LASER FLOW METER
DETAIL ON SHEET D3-05)
SSMH
RIM = 384.48'
BOT. PIT = 373.98'
12" D.I. (S) = 373.98'
12" D.I. (E) = 373.49'
SSMH
RIM = 383.88'
12" D.I. (S) = 373.73'
12" D.I. (W) = 373.65'
PI-12"CMP
INV=381.05'
PI-12"CMP
INV=382.35'
10" D.I. STUB
AD
RIM=383.03'
12"PVC(E)=376.28'
18"PVC(S)=375.83'
18"PVC(N)=375.73'
NEW STORM MH #201
10" D.I. STUB
SV-RIM = 384.09'
T/VALVE = 380.24'
SV-RIM = 384.04'
T/VALVE = 381.79'
SV-RIM = 383.90'
T/VALVE = 381.73'
APP. P/L
EXT.
APP. EXTEL
APP. EXTWL
APP. EXTNW
APP. EXTSW
APP. EXTSE
APP. EXTNE
EXT. EXTEL
EXT. EXTWL
EXT. EXTNW
EXT. EXTSW
EXT. EXTSE
EXT. EXTNE
EXT. EXTNL
EXT. EXTSL
EXT. EXTWL
EXT. EXTE

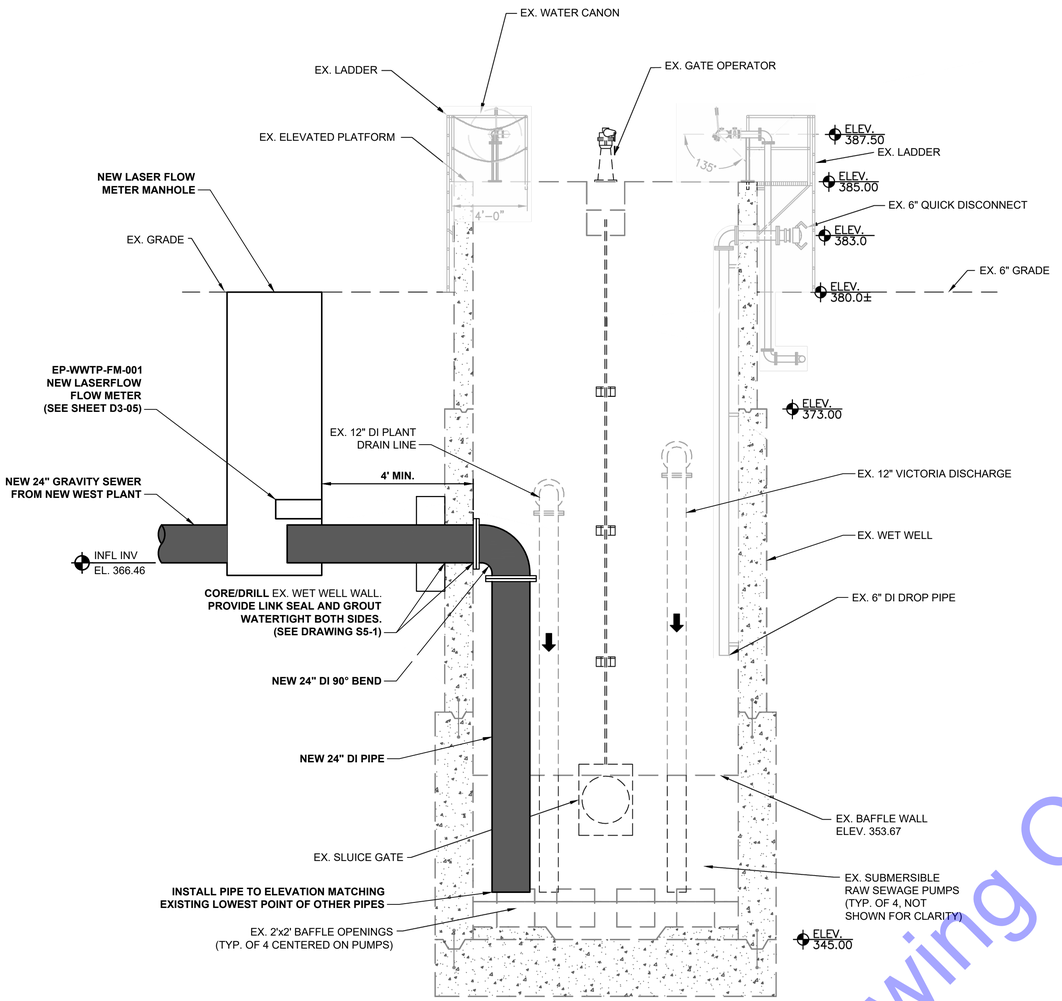

LIFT STATION NO. 3 MODIFICATION SECTION A

SCALE: 1/4"=1'-0"

0 2' 4' 8'

LIFT STATION NO. 3 MODIFICATION PHOTO 1

NOT TO SCALE

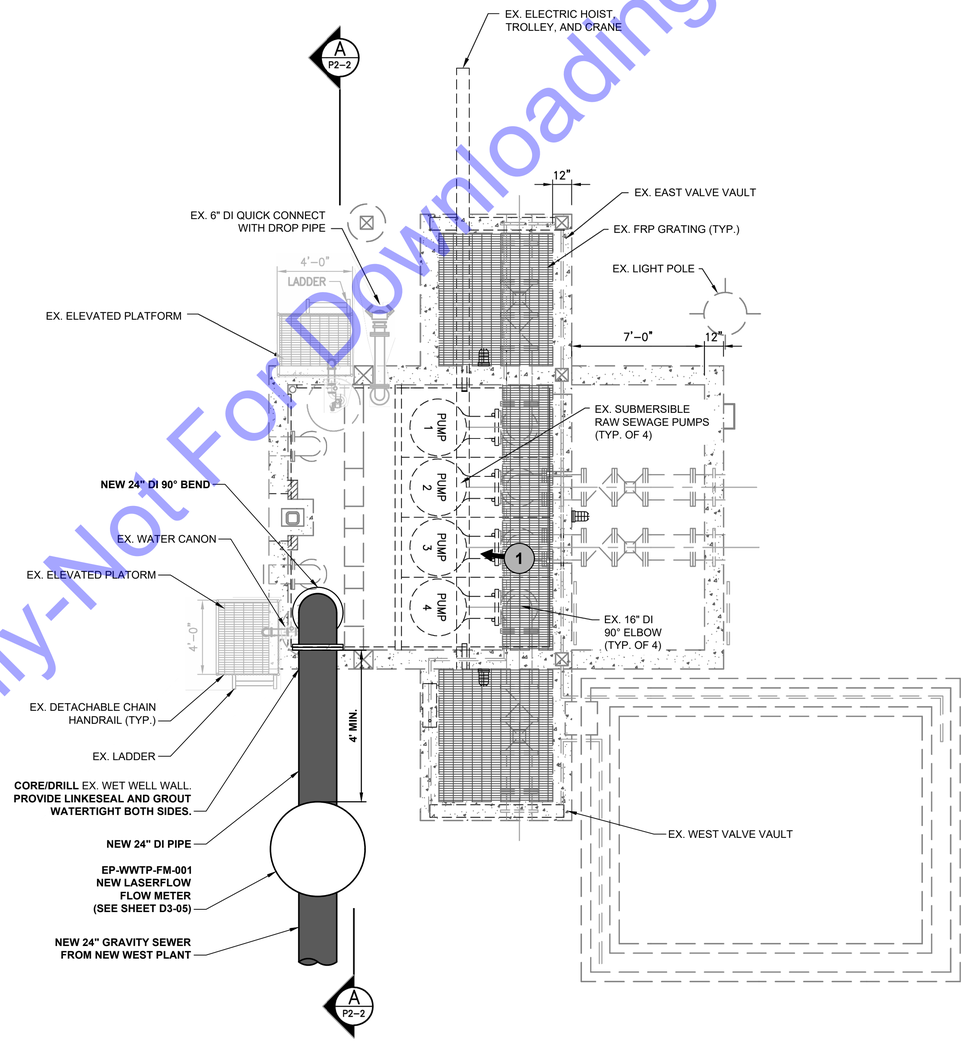

LIFT STATION NO. 3 MODIFICATION PLAN

SCALE: 1/4"=1'-0"

0 2' 4' 8'

GENERAL NOTE

1. PRIOR TO COMMENCING ANY CONSTRUCTION ACTIVITIES, CONTRACTOR SHALL FIELD VERIFY ELEVATIONS AND MEASUREMENTS OF ALL POINTS WHERE NEW CONSTRUCTION IS TO MATCH EXISTING CONDITIONS. CONTRACTOR SHALL REPORT ANY ERRORS OR DISCREPANCIES TO ENGINEER OR ASSUME RESPONSIBILITY TO ENSURE NEW WORK WILL MEET EXISTING EQUIPMENT, STRUCTURES, FACILITIES, PIPE, ETC. IF SUCH NEW PARTS DO NOT FIT PROPERLY TO EXISTING, CONTRACTOR SHALL, AT THE CONTRACTOR'S EXPENSE, MAKE SUCH ALTERATIONS TO NEW PARTS TO ENSURE PROPER FITMENTS AND CONNECTIONS CAN BE ATTAINED. SUCH WORK SHALL BE APPROVED BY THE ENGINEER PRIOR TO PURCHASING MATERIALS.
2. THE CONTRACTOR IS RESPONSIBLE FOR COORDINATING AND DESIGN OF ALL PIPE SUPPORTS AS A DELEGATED DESIGN.
3. CONTRACTOR SHALL BE REQUIRED TO DO EVERYTHING NECESSARY TO PROTECT, SUPPORT, AND SUSTAIN EXISTING STRUCTURES AND PIPING WHEN ENCOUNTERED ACROSS OR ALONG THE SITE OF THE WORK WITH ADDITIONAL SHEETING, SHORING, OR WHATEVER MEANS OF SUPPORT THAT IS NECESSARY. IF ANY OF THE EXISTING STRUCTURES OR PIPING ARE DAMAGED, THEY SHALL BE REPAIRED BY THE CONTRACTOR TO THEIR ORIGINAL CONDITION OR BETTER AND SAID REPAIRS SHALL BE AT NO ADDITIONAL COST TO THE OWNER.

For Public Viewing Only-Not For Downloading

COMMONWEALTH ENGINEERS, INC.
A wealth of resources to master a common goal.
https://commonwealthengineers.com/

RUDOLPH J NOTTICH
REGISTERED
No. PE19400077
INDIANA PROFESSIONAL ENGINEER

Signature 10/03/2025 Date

TOWN OF NEWBURGH
WARRICK COUNTY, INDIANA

WASTEWATER TREATMENT
PLANT FLOW EQ BASIN

© 2025 BY COMMONWEALTH ENGINEERS, INC. ALL RIGHTS RESERVED. REPRODUCTION BY ANY MEANS WHOLE OR IN PART WITHOUT PERMISSION IS PROHIBITED

Know what's below. 811 before you dig.
1-800-382-5544
(IT'S THE LAW)

No.	Submittal / Revision	By	Date

Designed By:	Drawn By:	Checked By:
DOF	DMJ	ETP
Issue Date:	Project No:	Scale:
10/03/25	S18005-041	AS SHOWN

EX. LIFT STATION NO. 3 MODIFICATION PLAN, SECTION, AND DETAILS

Drawing No:
D7-02
Sheet: 52 OF 161

File: Z:\SHARED\IN CLIENTS M-Z\NEWBURGH\S18005 ON CALL SEWER ENG SVCS\041 WWTP FLOW EQ BASIN\06 CADD\ CURRENT FILES\1 DRAWINGS\21-LS3 MODIFICATIONS.DWG
Saved: 9/30/2025 4:20:00 PM Plotted: 10/2/2025 2:03:01 PM Current User: Drew Jenkins LastSavedBy: djenkins

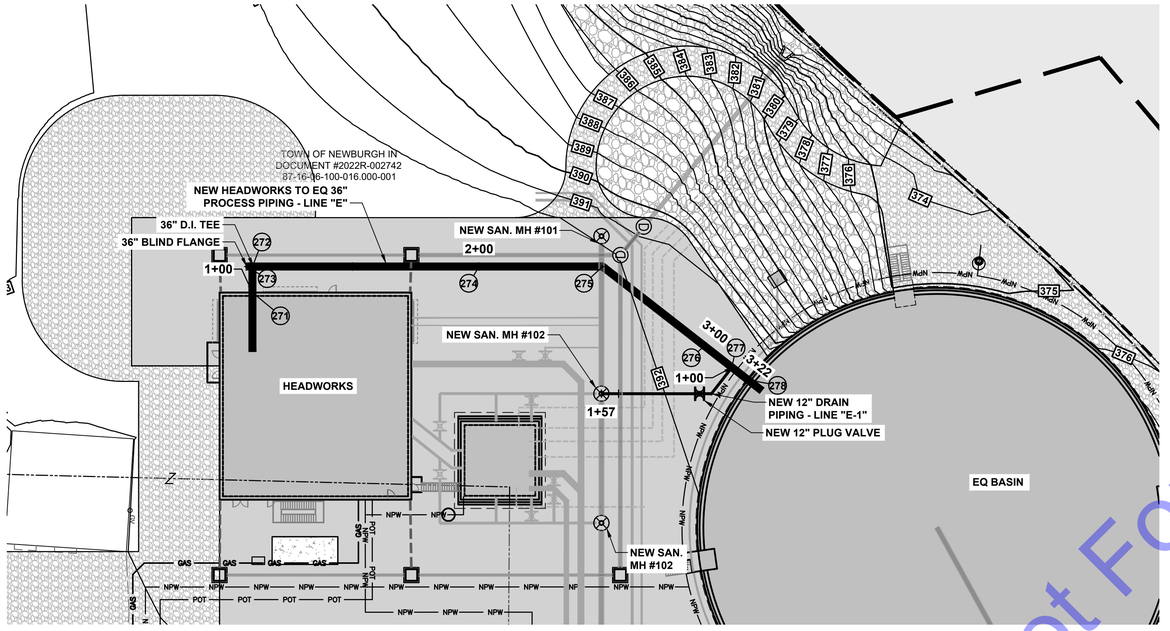

PLAN - LINE "E" STA. 1+00 TO 3+22

NE LOCATION TABLE			
POINT	DESCRIPTION	NORTHING	EASTING
271	STA. 1+00 LINE "E"	981144.10	2875585.84
272	TEE LINE "E"	981144.10	2875575.54
273	BLIND FLANGE LINE "E"	981141.54	2875575.54
274	STA. 2+00 LINE "E"	981233.80	2875575.54
275	45° BEND LINE "E"	981282.77	2875575.54
276	STA. 3+00 LINE "E"	981323.02	2875606.91
277	TEE LINE "E" - STA. 1+00 LINE "E-1"	981333.97	2875615.45
278	STA. 3+22 LINE "E"	981340.33	2875620.43
281	45° BEND LINE "E-1"	981325.84	2875625.90

GENERAL NOTES

1. GRANULAR BACKFILL SHALL BE IMPLEMENTED PER DS-31.

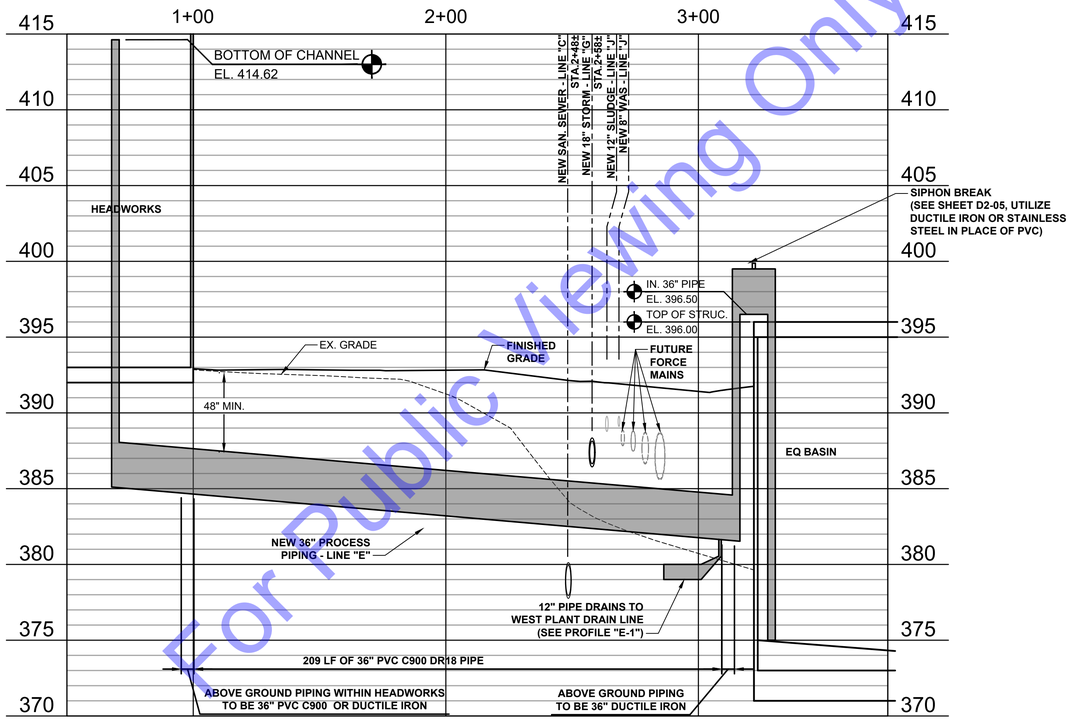

PROFILE - LINE "E" STA. 1+00 TO 3+22

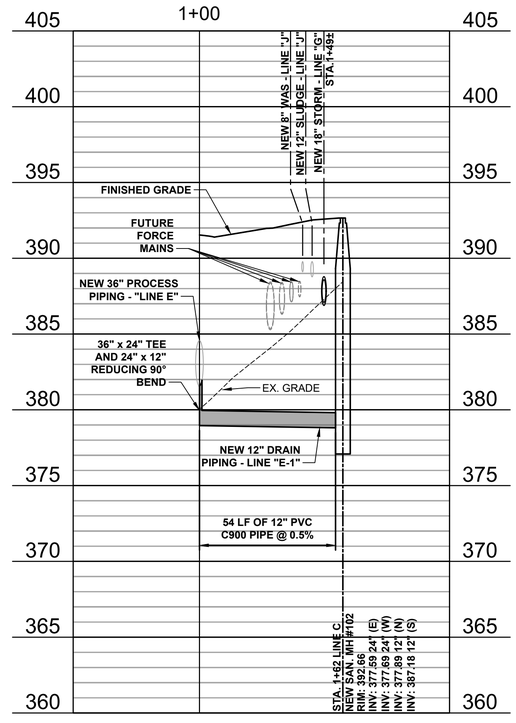

PROFILE - LINE "E-1" STA. 1+00 TO 1+57

HORIZONTAL SCALE: 1" = 30'-0"
0 15' 30' 60' 90'
VERTICAL SCALE: 1"=5'
5' 0

For Public Viewing Only-Not For Downloading

COMMONWEALTH ENGINEERS, INC.
A wealth of resources to master a common goal.
https://commonwealthengineers.com/

RUDOLPH J. NOTTOLICH
REGISTERED
No. PE19400077
INDIANA
PROFESSIONAL ENGINEER
Signature 10/03/2025 Date

TOWN OF NEWBURGH
WARRICK COUNTY, INDIANA

WASTEWATER TREATMENT
PLANT FLOW EQ BASIN

© 2025 BY COMMONWEALTH ENGINEERS, INC.: ALL RIGHTS RESERVED. REPRODUCTION BY ANY METHOD, IN WHOLE OR IN PART WITHOUT PERMISSION IS PROHIBITED

Indiana 811 Know what's below. 811 before you dig. 1-800-382-5544 (ITS THE LAW)

No.	Submittal / Revision	By	Date

Designed By:	Drawn By:	Checked By:
DOF	DMJ	ETP
Issue Date:	Project No:	Scale:
10/03/25	S18005-041	AS SHOWN

NEW HEADWORKS TO EQ PROCESS PIPING PLAN AND PROFILE - LINE "E"

Drawing No:
D8-01
Sheet: 53 OF 161

File: Z:\SHARED\IN CLIENTS M-Z\NEWBURGH\S18005 ON CALL SEWER ENG S\VCS\041 WWTP FLOW EQ BASIN\05 CADA CURRENT FILES\1 DRAWINGS\114-PLAN & PROFILE - LINE E.DWG
Saved: 10/2/2025 11:47:44 AM Plotted: 10/2/2025 2:04:02 PM Current User: Drew Jenkins LastSavedBy: djenkins

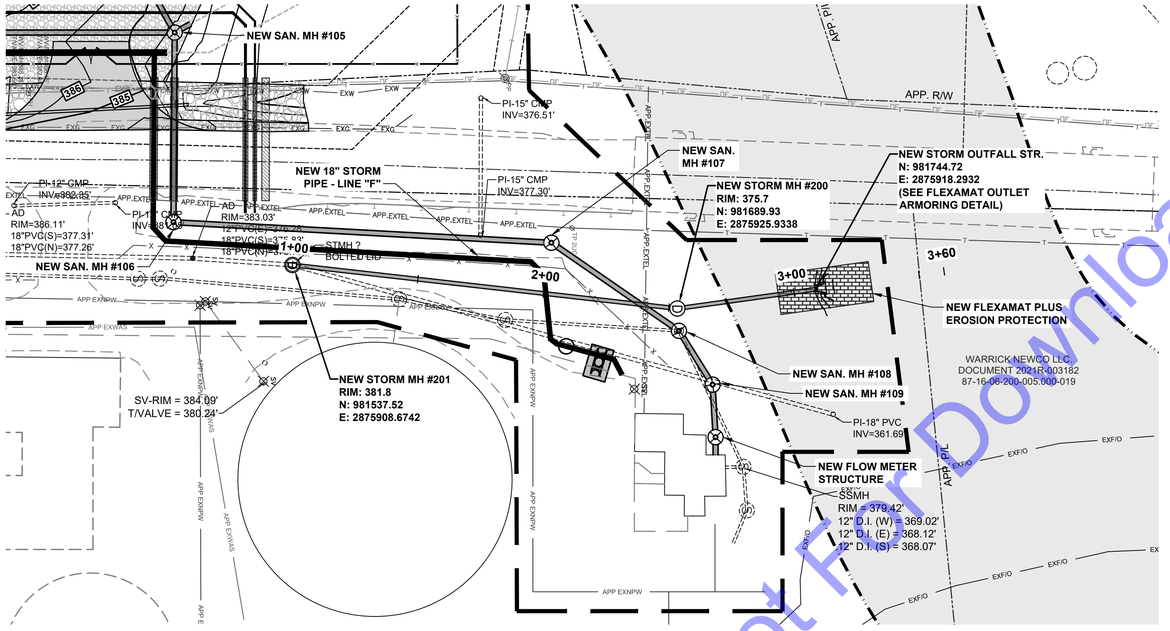

PLAN - LINE "F" STA. 1+00 TO 3+60

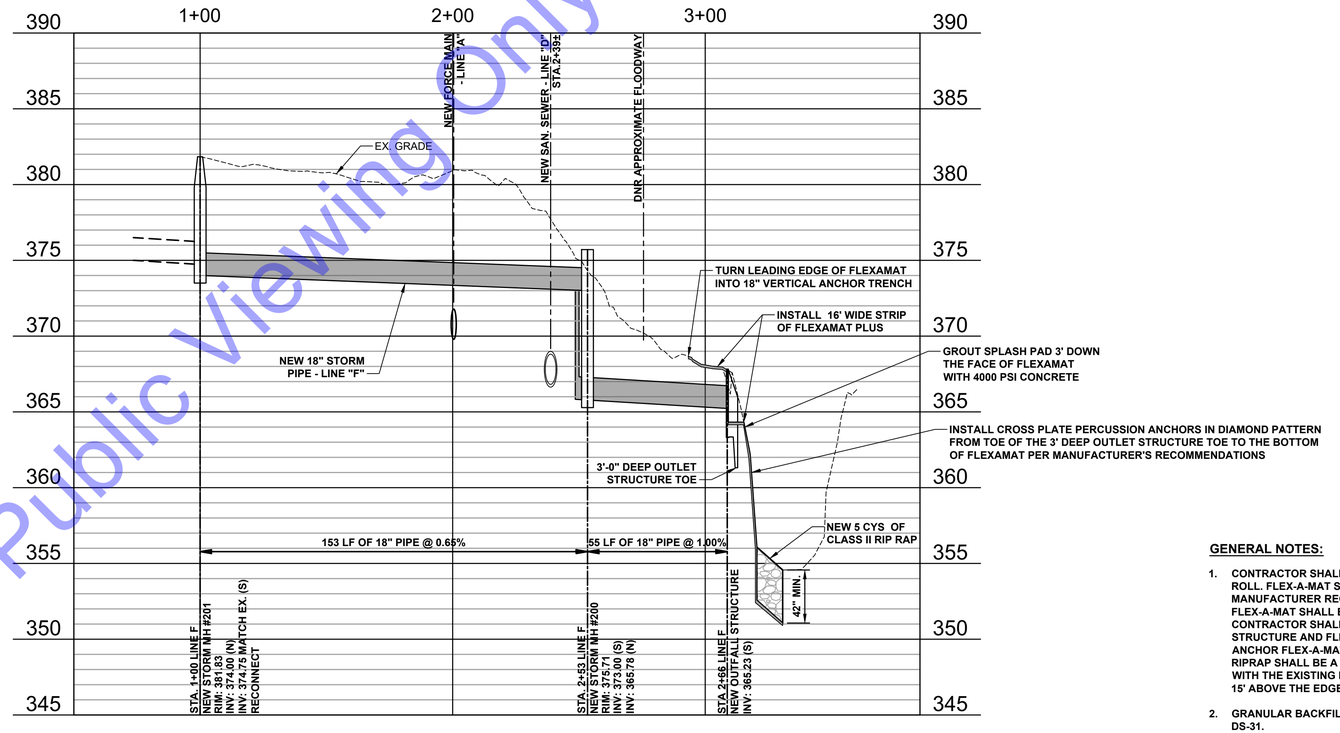

PROFILE - LINE "F" STA. 1+00 TO 3+60

GENERAL NOTES:

1. CONTRACTOR SHALL INSTALL A 16' WIDE FLEX-A-MAT ROLL. FLEX-A-MAT SHALL BE INSTALLED PER MANUFACTURER RECOMMENDATIONS. EDGES OF FLEX-A-MAT SHALL BE BURIED 18" ON EACH SIDE. CONTRACTOR SHALL GROUT BETWEEN HEADWALL STRUCTURE AND FLEX-A-MAT. CONTRACTOR SHALL ANCHOR FLEX-A-MAT UNDER 5 CYS OF CLASS II RIPRAP. RIPRAP SHALL BE A MINIMUM OF 42" DEEP AND FLUSH WITH THE EXISTING BANK. FLEX-A-MAT SHALL EXTEND 15' ABOVE THE EDGE OF THE HEADWALL.
2. GRANULAR BACKFILL SHALL BE IMPLEMENTED PER DS-31.

VERTICAL SCALE: 1"=5'
5'
0

HORIZONTAL SCALE: 1" = 30'-0"
0 15' 30' 60' 90'

For Public Viewing Only-Not For Downloading

COMMONWEALTH ENGINEERS, INC.
A wealth of resources to master a common goal.
https://commonwealthengineers.com/

RUDOLPH J. NOLTICH
REGISTERED
No. PE19400077
INDIANA
PROFESSIONAL ENGINEER

Signature 10/03/2025 Date

TOWN OF NEWBURGH
WARRICK COUNTY, INDIANA

WASTEWATER TREATMENT
PLANT FLOW EQ BASIN

© 2025 BY COMMONWEALTH ENGINEERS, INC. ALL RIGHTS RESERVED. REPRODUCTION BY ANY METHOD, IN WHOLE OR IN PART WITHOUT PERMISSION IS PROHIBITED

Indiana 811 Know what's below. 811 before you dig. 1-800-382-5544 (ITS THE LAW)

No.	Submittal / Revision	By	Date

Designed By:	Drawn By:	Checked By:
DOF	DMJ	ETP
Issue Date:	Project No:	Scale:
10/03/25	S18005-041	AS SHOWN

NEW STORM DRAIN OUTFALL PLAN AND PROFILE - LINE "F"

Drawing No:
D9-01
Sheet: 54 OF 161

File: Z:\SHARED\IN CLIENTS M-Z\NEWBURGH\S18005 ON CALL SEWER ENG SVCS\041 WWTP FLOW EQ BASIN\05 CADA CURRENT FILES\1 DRAWINGS\15-PLAN & PROFILE - LINE F.DWG
Saved: 10/1/2025 4:40:34 PM Plotted: 10/2/2025 2:05:32 PM Current User: Drew Jenkins LastSavedBy: djenkins

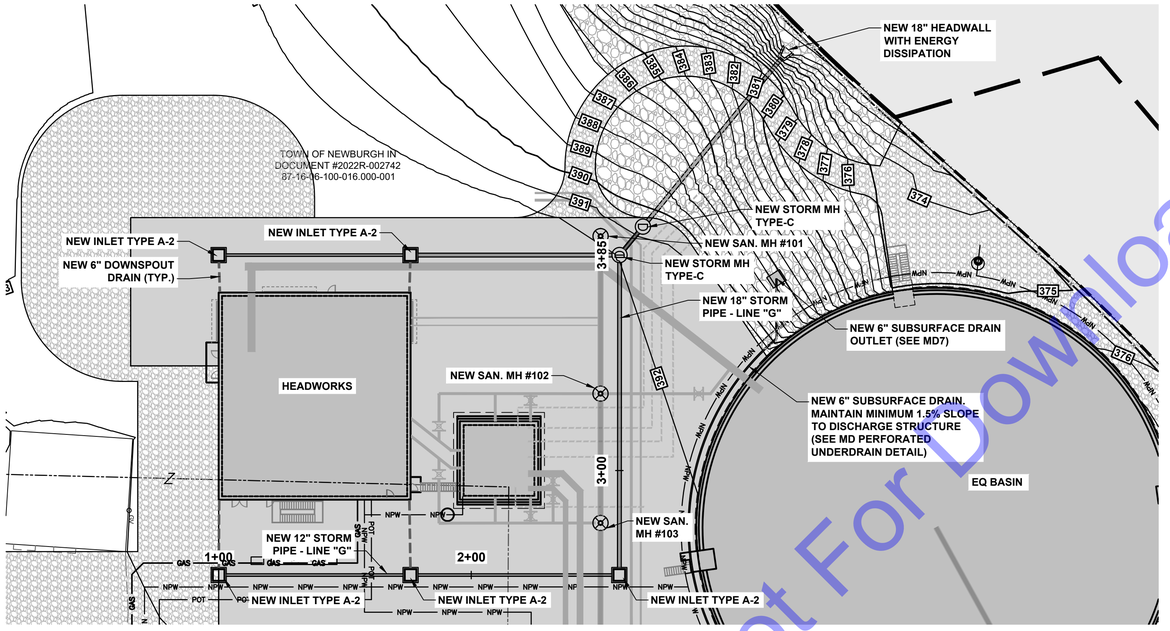

PLAN - LINE "G" STA. 1+00 TO 3+85

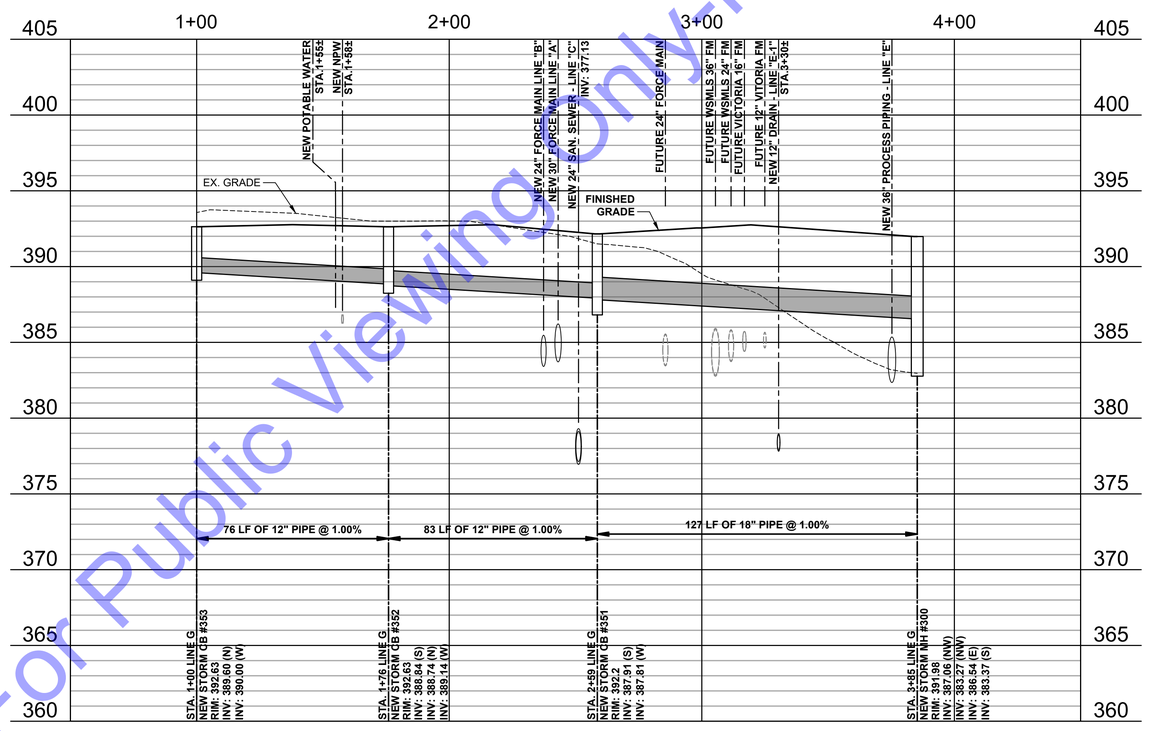

PROFILE - LINE "G" STA. 1+00 TO 3+85

GENERAL NOTES

1. GRANULAR BACKFILL SHALL BE IMPLEMENTED PER DS-31.

HORIZONTAL SCALE: 1" = 30'-0"
0 15' 30' 60' 90'
VERTICAL SCALE: 1"=5'
5' 0

For Public Viewing Only-Not For Downloading

COMMONWEALTH ENGINEERS, INC.
A wealth of resources to master a common goal.
https://commonwealthengineers.com/

RUDOLPH J. NOTTOLI REGISTERED No. PE19400077 INDIANA PROFESSIONAL ENGINEER
Signature 10/03/2025 Date

TOWN OF NEWBURGH
WARRICK COUNTY, INDIANA

WASTEWATER TREATMENT
PLANT FLOW EQ BASIN

© 2025 BY COMMONWEALTH ENGINEERS, INC.: ALL RIGHTS RESERVED. REPRODUCTION BY ANY METHOD, IN WHOLE OR IN PART WITHOUT PERMISSION IS PROHIBITED

Indiana 811 Know what's below. 811 before you dig. 1-800-382-5544 (ITS THE LAW)

No.	Submittal / Revision	By	Date

Designed By:	Drawn By:	Checked By:
DOF	DMJ	ETP
Issue Date: 10/03/25	Project No: S18005-041	Scale: AS SHOWN

NEW STORM DRAIN PLAN AND PROFILE - LINE "G"

Drawing No:
D10-01
Sheet: 55 OF 161

File: Z:\SHARED\IN CLIENTS M-Z\NEWBURGH\S18005 ON CALL SEWER ENG SVC\S041 WWTP FLOW EQ BASIN\05 CADA CURRENT FILES\1 DRAWINGS\16-PLAN & PROFILE - LINE G.DWG
Saved: 10/1/2025 4:41:17 PM Plotted: 10/2/2025 2:06:05 PM Current User: Drew Jenkins LastSavedBy: djenkins

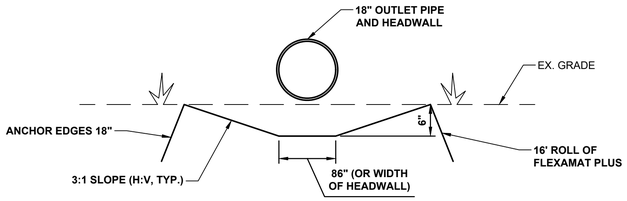

FLEXAMAT SWALE DETAIL AT HEADWALL OUTLET

NOT TO SCALE

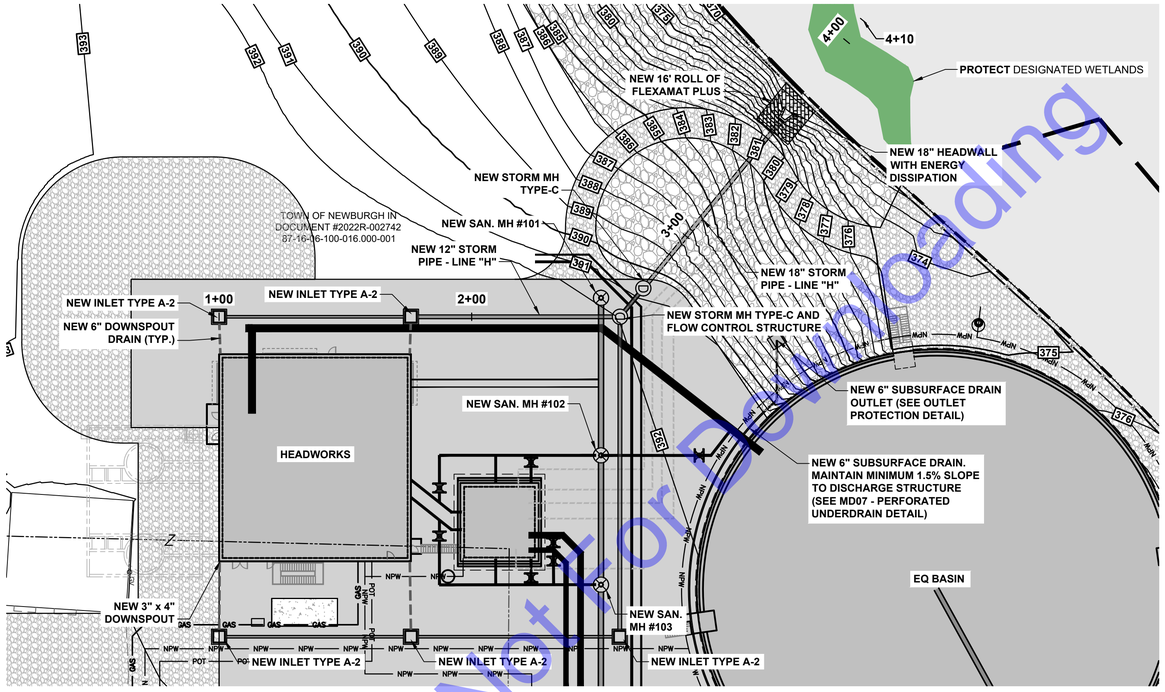

PLAN - LINE "H" STA. 1+00 TO 4+10

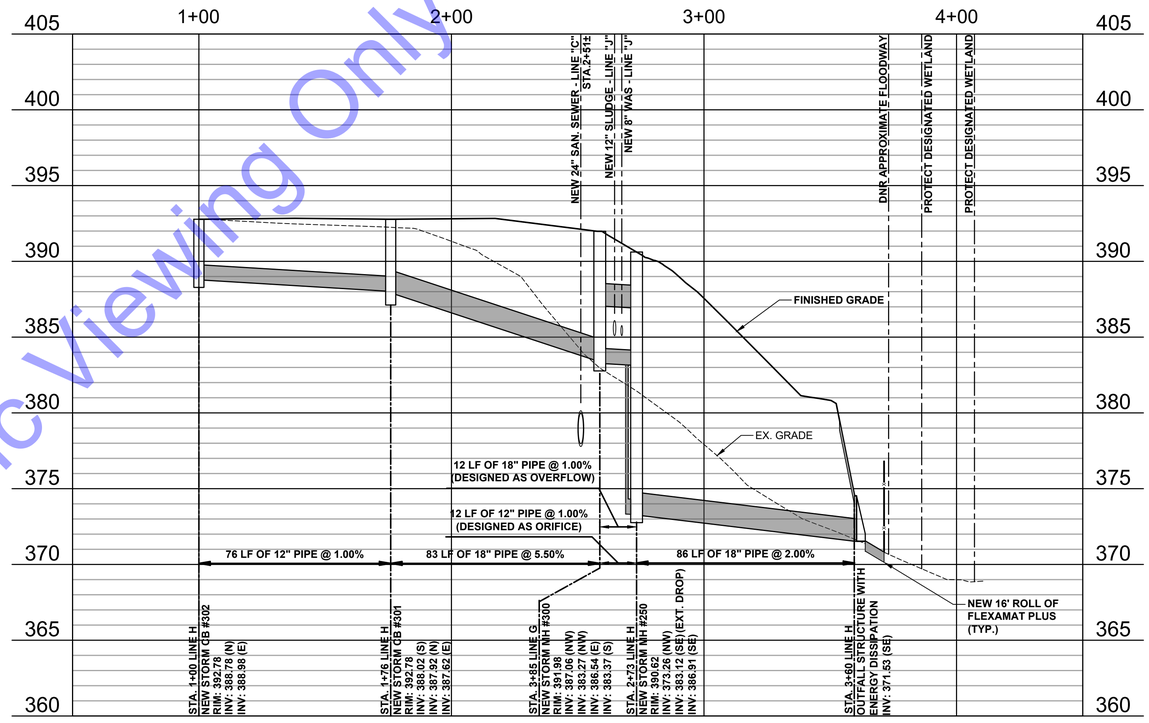

PROFILE - LINE "H" STA. 1+00 TO 4+10

HORIZONTAL SCALE: 1" = 30'-0"
0 15' 30' 60' 90'

VERTICAL SCALE: 1"=5'
0 5'

SHEET NOTES

1. CONTRACTOR SHALL INSTALL A 16' WIDE FLEXAMAT ROLL. FLEXAMAT SHALL BE INSTALLED PER MANUFACTURER RECOMMENDATIONS. EDGES OF FLEXAMAT SHALL BE BURIED 18" ON EACH SIDE. CONTRACTOR SHALL GROUT BETWEEN HEADWALL STRUCTURE AND FLEXAMAT. FLEXAMAT SHALL EXTEND 6' ABOVE THE EDGE OF THE HEADWALL. TOE OF FLEXAMAT SHOULD BE ANCHORED 18" TO PREVENT FLOOD PLAIN FLOW FROM UNDERMINING.
2. GRANULAR BACKFILL SHALL BE IMPLEMENTED PER DS-31.

For Public Viewing Only-Not For Downloading

COMMONWEALTH ENGINEERS, INC.
A wealth of resources to master a common goal.
https://commonwealthengineers.com/

RUDOLPH J. NOTTICH
REGISTERED
No. PE19400077
INDIANA
PROFESSIONAL ENGINEER
Signature 10/03/2025 Date

TOWN OF NEWBURGH
WARRICK COUNTY, INDIANA

WASTEWATER TREATMENT
PLANT FLOW EQ BASIN

© 2025 BY COMMONWEALTH ENGINEERS, INC. ALL RIGHTS RESERVED. REPRODUCTION BY ANY METHOD, IN WHOLE OR IN PART WITHOUT PERMISSION IS PROHIBITED

Know what's below. 811 before you dig.
1-800-382-5544
(ITS THE LAW)

No.	Submittal / Revision	By	Date

Designed By:	Drawn By:	Checked By:
DOF	DMJ	ETP
Issue Date:	Project No:	Scale:
10/03/25	S18005-041	AS SHOWN

NEW STORM DRAIN PLAN AND PROFILE - LINE "H"

Drawing No:
D11-01
Sheet: 56 OF 161

File: Z:\SHARED\IN CLIENTS M-Z\NEWBURGH\S18005 ON CALL SEWER ENG SVCS\041 WWTP FLOW EQ BASIN\06 CADA CURRENT FILES\1 DRAWINGS\17-PLAN & PROFILE - LINE H.DWG
Saved: 10/2/2025 11:49:11 AM Plotted: 10/2/2025 2:06:40 PM Current User: Drew Jenkins LastSavedBy: djenkins

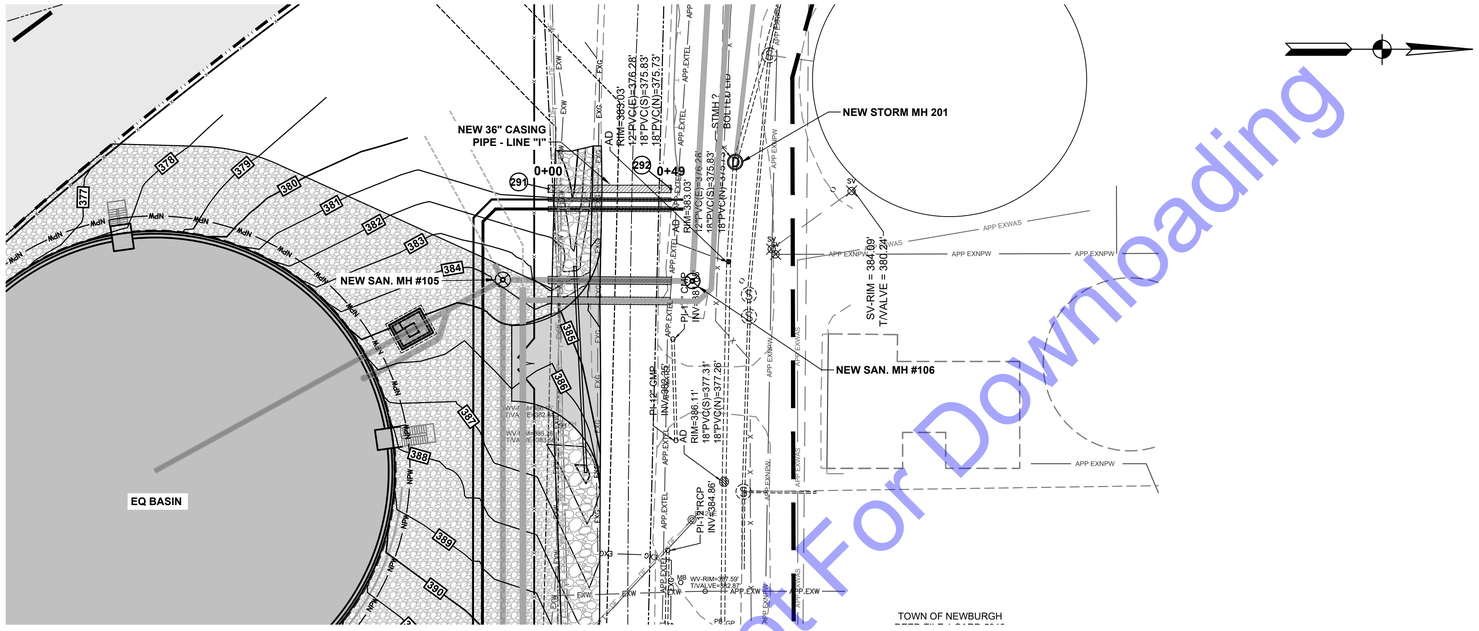
NEW 36" CASING PIPE - LINE "I"
0+00
291
0+49
292
NEW STORM MH 201
NEW SAN. MH #105
NEW SAN. MH #106
EQ BASIN
AD RIM=383.03' 12"PVC(E)=376.28' 18"PVC(S)=375.83' 18"PVC(N)=375.73'
STMH 2 BOLTED END
SV-RIM = 384.09' T/VALVE = 380.24'
PI-12"CMP INV=384.85
PI-12"RCP INV=384.86
AD RIM=386.11' 18"PVC(S)=377.31' 18"PVC(N)=377.26'
WV-RIM=387.59' T/VALVE=382.87
TOWN OF NEWBURGH
APP EXNPW
APP EXWAS
APP EXTEL
APP EXW
APP EXGAS
APP EXSAN
APP EXSTM
APP EXDIT
APP EXTRE
APP EXCOM
APP EXPOL
APP EXGUA
APP EXSIG
APP EXFOU
APP EXTRA
APP EXTRE
APP EXTRE
APP EXTRE

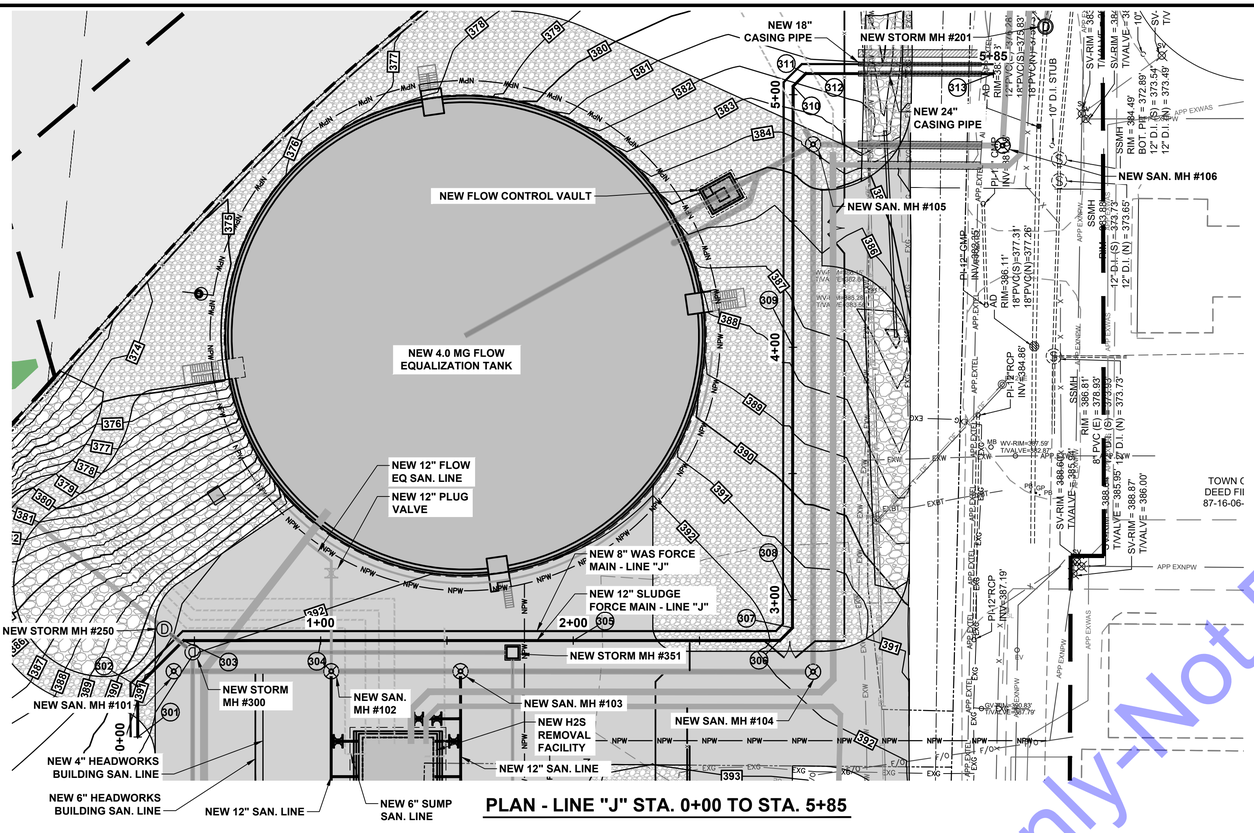

PLAN - LINE "J" STA. 0+00 TO STA. 5+85

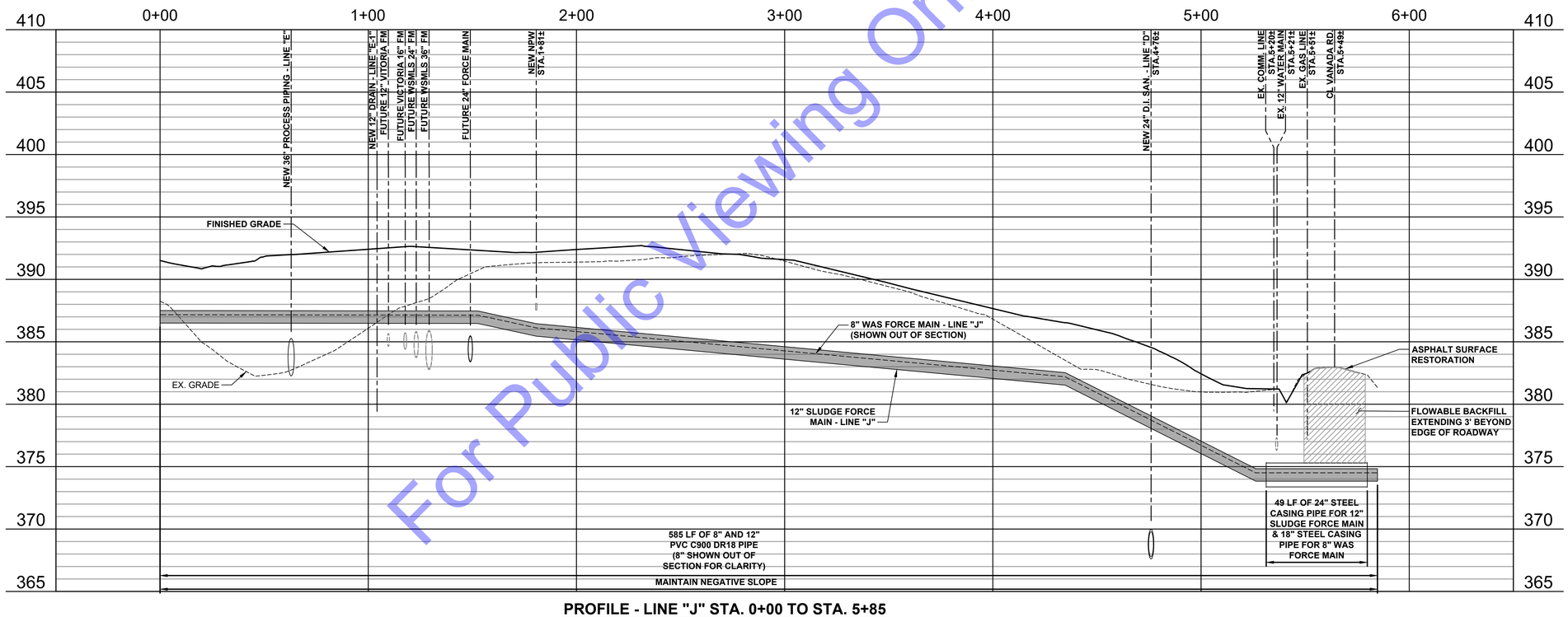

PROFILE - LINE "J" STA. 0+00 TO STA. 5+85

NE LOCATION TABLE			
POINT	DESCRIPTION	NORTHING	EASTING
303	45° BEND LINE "J"	981294.46	2875567.39
304	STA. 1+00 LINE "J"	981294.46	2875621.69
305	STA. 2+00 LINE "J"	981294.46	2875721.69
306	45° BEND LINE "J"	981294.46	2875803.50
307	45° BEND LINE "J"	981299.46	2875808.49
308	STA. 3+00 LINE "J"	981310.59	2875808.51
309	STA. 4+00 LINE "J"	981410.59	2875808.66
310	STA. 5+00 LINE "J"	981510.59	2875808.80
311	45° BEND LINE "J"	981513.97	2875808.81
312	45° BEND LINE "J"	981518.96	2875813.81
313	STA. 5+85 LINE "J"	981518.85	2875888.07
331	NW COR GRAVEL PAVEMENT	981544.71	2875662.13
332	PT GRAVEL PAVEMENT	981543.75	2875696.59

GENERAL NOTES

1. WAS AND SLUDGE LINES SHALL BE LAID IN THE SAME TRENCH AND SPACED 2 FEET APART.
2. MANDATORY ALTERNATE 4 IS A DEDUCT REMOVING 8" WAS LINE, 12" SLUDGE LINE, AND ALL RELATED COMPONENTS FROM THE PROJECT.
3. THE CONTRACT DRAWINGS INDICATE THE EXTENT AND THE GENERAL LOCATION AND ARRANGEMENT OF EQUIPMENT, FIXTURES, AND PIPING. CONTRACTOR SHALL STUDY PLANS AND DETAILS AND SHALL COOPERATE WITH ALL OTHER TRADES TO PREVENT CONFLICT AND INTERFERENCE AS TO SPACE REQUIREMENTS. FIXTURES, EQUIPMENT, AND PIPING SHALL BE LOCATED TO AVOID INTERFERENCE WITH MECHANICAL OR STRUCTURAL FEATURES. ANY RELOCATION OF MATERIALS OR EQUIPMENT REQUIRED DUE TO THE FAILURE OF THE CONTRACTOR TO PERFORM SUCH COORDINATION BETWEEN THE TRADES OR HAVE THE TRADES PERFORM SUCH COORDINATION SHALL BE AT THE SOLE COST OF THE CONTRACTOR WITH NO TIME ALLOWED FOR THE CORRECTED WORK.
4. DRAWINGS ARE DIAGRAMMATIC ONLY. COORDINATION WITH OTHER TRADES, LAYOUT, ROUTING, AND FITTINGS NECESSARY ARE THE RESPONSIBILITY OF THE CONTRACTOR.
5. FORCE MAIN LOCATE BOXES AND MARKERS SHALL BE INSTALLED IN THE GENERAL LOCATIONS SHOWN ON THE PLANS, AT INTERVALS NOT TO EXCEED 500 FEET, AT EACH BEND, AT EACH AIR RELEASE VALVE STRUCTURE AND FORCE MAIN DISCHARGE STRUCTURES.
6. CONTRACTOR SHALL PROVIDE FITTINGS WHERE FORCE MAIN HORIZONTAL AND VERTICAL ALIGNMENT EXCEEDS PIPE MANUFACTURE'S MAXIMUM DEFLECTION. CONTRACTOR SHALL INSTALL NECESSARY FITTINGS AS REQUIRED TO MAKE ALL BENDS.
7. GRANULAR BACKFILL SHALL BE IMPLEMENTED PER DS-31.

HORIZONTAL SCALE: 1" = 30'-0"
0 15' 30' 60' 90'
VERTICAL SCALE: 1"=5'
5' 0

For Public Viewing Only-Not For Downloading

COMMONWEALTH ENGINEERS, INC.
A wealth of resources to master a common goal.
https://commonwealthengineers.com/

RUDOLPH J. NOTTICH
REGISTERED
No. PE19400077
INDIANA
PROFESSIONAL ENGINEER
Signature 10/03/2025 Date

TOWN OF NEWBURGH
WARRICK COUNTY, INDIANA

WASTEWATER TREATMENT
PLANT FLOW EQ BASIN

© 2025 BY COMMONWEALTH ENGINEERS, INC. ALL RIGHTS RESERVED. REPRODUCTION BY ANY METHOD WHOLE OR IN PART WITHOUT PERMISSION IS PROHIBITED

indiana811 Know what's below. 811 before you dig. 1-800-382-5544 (ITS THE LAW)

No.	Submittal / Revision	By	Date

Designed By:	Drawn By:	Checked By:
DOF	DMJ	ETP
Issue Date: 10/03/25	Project No: S18005-041	Scale: AS SHOWN

NEW SLUDGE FORCE MAIN PLAN AND PROFILE - LINE "J"

Drawing No: **D13-01**

Sheet: 58 OF 161

File: Z:\SHARED\IN CLIENTS M-Z\NEWBURGH\S18005 ON CALL SEWER ENG SVCS\041 WWTP FLOW EQ BASIN\06 CADD\A CURRENT FILES\1 DRAWINGS\22-PLAN & PROFILE - LINE J.DWG
Saved: 10/2/2025 5:55:02 AM Plotted: 10/2/2025 2:08:19 PM Current User: Drew Jenkins LastSavedBy: djenkins

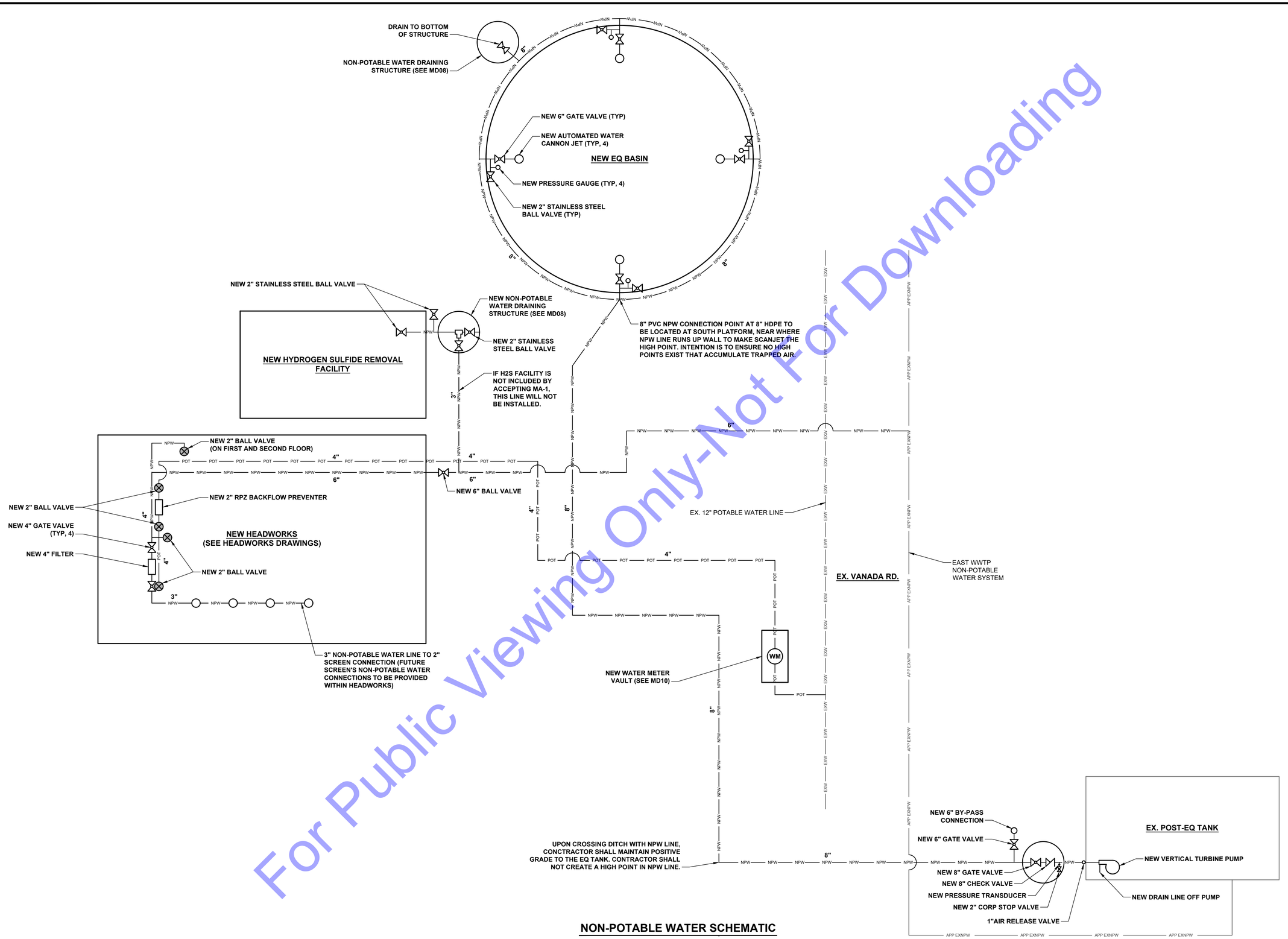

NON-POTABLE WATER SCHEMATIC

For Public Viewing Only-Not For Downloading

COMMONWEALTH ENGINEERS, INC.
A wealth of resources to master a common goal.
https://commonwealthengineers.com/

RUDOLPH J NOTTICH
REGISTERED
No. PE19400077
INDIANA PROFESSIONAL ENGINEER

Signature 10/03/2025 Date

TOWN OF NEWBURGH
WARRICK COUNTY, INDIANA

WASTEWATER TREATMENT
PLANT FLOW EQ BASIN

© 2025 BY COMMONWEALTH ENGINEERS, INC. ALL RIGHTS RESERVED. REPRODUCTION BY ANY METHOD, IN WHOLE OR IN PART WITHOUT PERMISSION IS PROHIBITED

Know what's below. 811 before you dig.
1-800-382-5544
(ITS THE LAW)

No.	Submittal / Revision	By	Date

Designed By:	Drawn By:	Checked By:
DOF	DMJ	ETP
Issue Date: 10/03/25	Project No: S18005-041	Scale: AS SHOWN

NON-POTABLE & POTABLE WATER SCHEMATIC

Drawing No:
D14-01
Sheet: 59 OF 161

File: Z:\SHARED\IN CLIENTS M-Z\NEWBURGH\S18005 ON CALL SEWER ENG S\SC\S041 WWTP FLOW EQ BASIN\06 CADA CURRENT FILES\1 DRAWINGS\19 NON-POTABLE SCHEMATIC PLAN AND SECTIONS.DWG
Saved: 10/2/2025 11:59:38 AM Plotted: 10/2/2025 2:08:40 PM Current User: Drew Jenkins LastSavedBy: djenkins

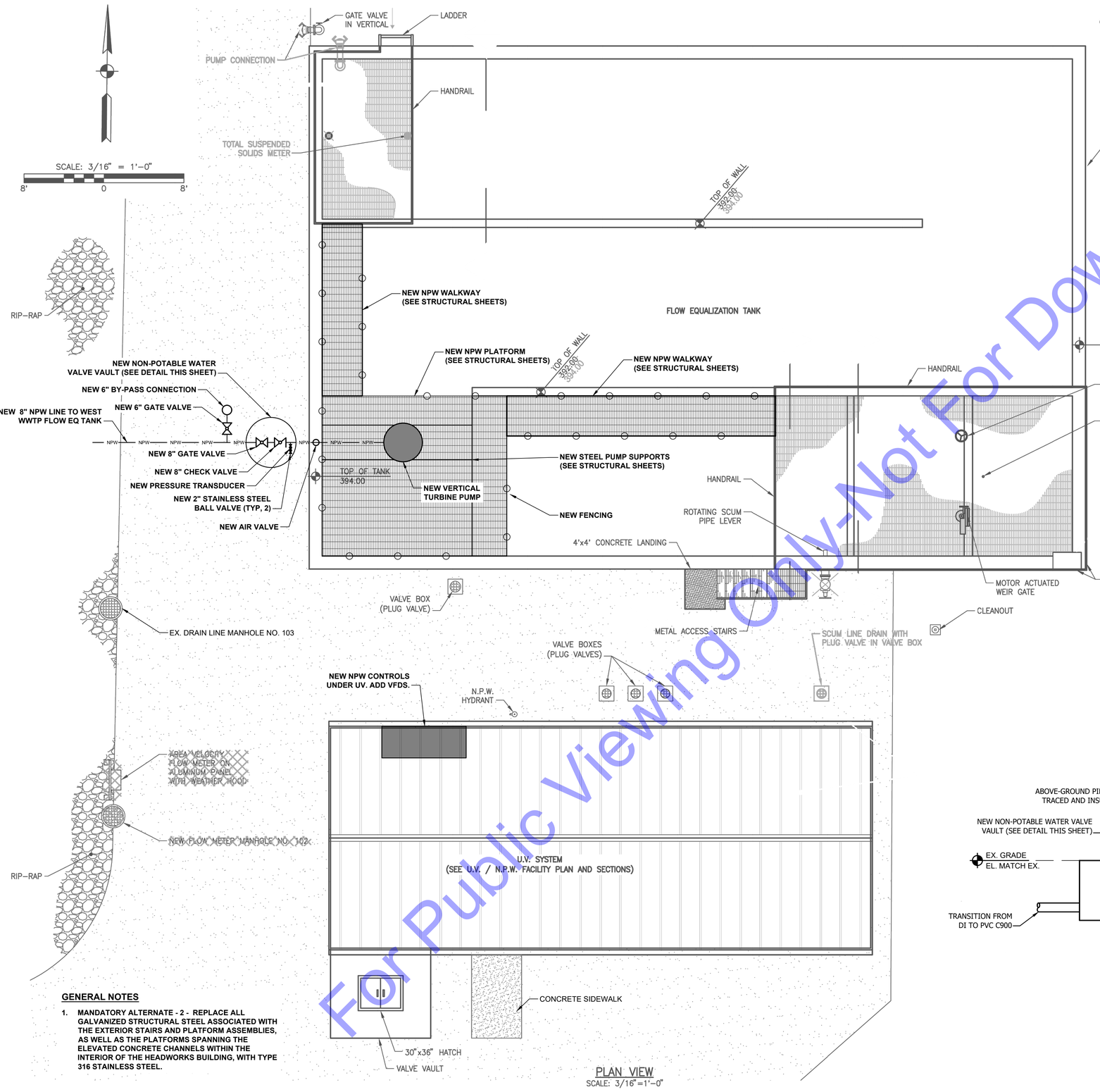

GENERAL NOTES

1. **MANDATORY ALTERNATE - 2 - REPLACE ALL GALVANIZED STRUCTURAL STEEL ASSOCIATED WITH THE EXTERIOR STAIRS AND PLATFORM ASSEMBLIES, AS WELL AS THE PLATFORMS SPANNING THE ELEVATED CONCRETE CHANNELS WITHIN THE INTERIOR OF THE HEADWORKS BUILDING, WITH TYPE 316 STAINLESS STEEL.**

For Public Viewing Only-Not For Downloading

COMMONWEALTH ENGINEERS, INC.
A wealth of resources to master a common goal.
https://commonwealthengineers.com/

RUDOLPH J. NOVLICH
REGISTERED
No. PE19400077
INDIANA PROFESSIONAL ENGINEER
Signature 10/03/2025 Date

TOWN OF NEWBURGH
WARRICK COUNTY, INDIANA

WASTEWATER TREATMENT PLANT FLOW EQ BASIN

© 2025 BY COMMONWEALTH ENGINEERS, INC. ALL RIGHTS RESERVED. REPRODUCTION BY ANY METHOD, IN WHOLE OR IN PART WITHOUT PERMISSION IS PROHIBITED

Indiana 811 Know what's below. 811 before you dig. 1-800-382-5544 (ITS THE LAW)

No.	Submittal / Revision	By	Date

Designed By:	Drawn By:	Checked By:
DOF	DMJ	ETP
Issue Date: 10/03/25	Project No: S18005-041	Scale: AS SHOWN

NON-POTABLE WATER PLAN

Drawing No: **D14-02**

Sheet: 60 OF 161

File: Z:\SHARED\IN CLIENTS M-Z\NEWBURGH\S18005.ON CALL SEWER ENG SVCS\041 WWTP FLOW EQ BASIN\06 CAD\A CURRENT FILES\1 DRAWINGS\19-NON-POTABLE SCHEMATIC PLAN AND SECTIONS.DWG
Saved: 10/2/2025 11:59:38 AM Plotted: 10/2/2025 2:08:46 PM Current User: Drew Jenkins LastSavedBy: djenkins

Construction Plan - General Plan Components (Section A)

A1 Index of the location of required plan elements in the construction plan:

This document represents the plan index, and locations in the construction plan are indicated where appropriate throughout. The content is organized around the Indiana Department of Environmental Management Construction Stormwater General Permit Construction/Stormwater Pollution Prevention Plan Development Guidance. Details are specific to the Town of Newburgh Wastewater Treatment Plant Improvements.

A2 A vicinity map depicting the project site location in relationship to recognizable local landmarks, towns, and major roads:

This information has been included and is shown in the plans (Project Location Map). An aerial site map illustrating the approximate extent of the project is also shown in the plans (Overall Work Plan and Future Structure Layout). A USGS Topographic Map is shown in Exhibit #1. All construction will take place in existing rights of way, utility easements, or land owned by the Town.

A3 Narrative of the nature and purpose of the project:

This project aims to provide additional storage capacity during large wet weather events caused by inflow and infiltration (I/I) in the separate sanitary sewer collection system. These improvements include the construction of a new 60 MGD headworks, hydrogen sulfide removal facility, a 4.0 MG circular equalization basin, non-potable water system, and gravity sewer/force main/process piping upgrades. The project also includes but is not limited to installation of all architectural, electrical and controls, mechanical, plumbing, process, site, structural items associated with construction of the new headworks and platforms for the EQ basin, electrical actuated / manual slide gates installation, 24" and 30" force mains installation, flow meter installations, 24" gravity sewers, connections to existing wet well, sanitary sewer manholes, storm water structures; installation of waterline and hydrant non-potable water system, new site fencing and all associated work. Surfaces will be returned to their original grade following construction completion.

A4 Latitude and longitude to the nearest fifteen (15) seconds:

The approximate coordinates for the project site are 37.942274, -87.349928. These coordinates mark the location of the wastewater treatment plant.

A5 Legal description of the project site:

The project site is located in Anderson Township of Warrick County, Indiana. Township, range, and section of the project is listed in Table 1-1 below.

Table 1-1

Townships	Range	Sections
7S	8W	06

A6 11x 17-inch plat showing building lot numbers/boundaries and road layout/names:

All lot boundaries and road names are shown on the plans (Survey Control Plan, West WWTP Site Demolition Plan). All construction will take place in existing rights of way, utility easements, or land owned by the Town of Newburgh. An aerial site map illustrating the approximate extent of the project is shown in the plans (Overall Work Plan and Future Plant Structure).

A7 Boundaries of the one hundred (100) year floodplains, floodway fringes, and floodways:

The floodplains, floodway fringes, and floodways located within the project area are shown in **Exhibit #2**. The only portions of the project located within the floodway are the boundaries of construction at the northern end of the site, and the replacement of a storm drain and outfall to Cypress Creek. No permanent impacts in the floodway are anticipated.

A8 Land use of all adjacent properties:

Land use at the project site and the surrounding areas is shown in **Exhibit #3**. Land use at the site is primarily developed land and forested land. Land use of adjacent properties is mainly developed land, forested land, woody wetlands, and hay/pasture.

A9 Identification of a U.S. EPA approved or established TMDL:

The project area is located within the Cypress Creek watershed (0514020111) and the Summer Pecka Ditch-Cypress Creek sub watershed (051402011103). There are no approved or established Total Maximum Daily Load (TMDL) for these watersheds.

A10 Name(s) of the receiving water(s):

The receiving water bodies in the project area are Cypress Creek and the Ohio River.

A11 Identification of discharges to a water on the current 303(d) list of impaired waters and the pollutant for which it is impaired:

The parts of Cypress Creek in proximity to the project site are not listed on the current 303(d) list of impaired waters. The Ohio River is listed on the current 303(d) list of impaired waters for Dioxin, Polychlorinated Biphenyls (PCBs), E. coli, and iron.

A12 Soils map of the predominate soil types:

The soils map for the project areas that involve land disturbance areas are shown in **Exhibit #4**. The soils in the project area consist mainly of "UnB2" "Uniontown silt loam, 2 to 6 percent slopes, eroded", "HeA" "Henshaw silt loam, 0 to 2 percent slopes, rarely flooded", and "Wm" "Wilbur silt loam, frequently flooded".

Impacts from construction and excavation activities can be mitigated using appropriate techniques for erosion control and surface restoration during and after construction.

A13 Identification and location of all known wetlands, lakes, and water courses on or adjacent to the project site (construction plan, existing layout):

All wetlands, lakes, and water courses located within and near the project area have been identified and are shown in **Exhibit #5** and **Exhibit #6**. The major waterways in the area are Cypress Creek and the Ohio River. Stormwater derived flow will generally drain into these two waterbodies.

A14 Identification of any other state or federal water quality permits or authorizations that are required for construction activities:

The permits anticipated to be required for this project are Construction in a Floodway from DNR and 401 Water Quality Certification from IDEM.

A15 Identification and delineation of existing vegetative cover, including natural buffers:

The project site has been delineated for the purposes of Waters of the U.S. Jurisdictional Determination. This report includes an analysis of vegetative cover and natural buffers in the area. This is included in **Exhibit #7**. Streambank was found to be roughly 50-70% covered by vegetation, with obvious disruption, with patches of bare soil or closely cropped vegetation common. Vegetative cover can also be seen in the plans (Photo Log Plan, Overall Work Plan and Future Plant Structure).

A16 Existing site topography at an interval appropriate to show detailed drainage patterns:

A USGS topographic map is shown in **Exhibit #1**. More detailed contour lines are also shown on individual plan sheets (Erosion Control Plan, among others) to indicate drainage patterns within the construction limits.

A17 Location(s) where run-off enters the project site:

A USGS topographic map is shown in **Exhibit #1**. More detailed contour lines are also shown on individual plan sheets (Erosion Control Plan, among others) to indicate drainage patterns within the construction limits.

A18 Location(s) where run-off discharges from the project site prior to land disturbance:

A USGS topographic map is shown in **Exhibit #1**. More detailed contour lines are also shown on individual plan sheets (Erosion Control Plan, among others) to indicate drainage patterns within the construction limits.

A19 Location of all existing structures on the project site:

The location of all existing structures on the project site can be seen in the plans (Overall Work Plan and Future Plant Structure).

A20 Existing permanent retention or detention facilities, including manmade wetlands, designed for the purpose of stormwater management:

There is a permanent retention pond in the project area for the purpose of stormwater management. However, this pond is planned to be filled as part of this project.

A21 Locations where stormwater may be directly discharged into ground water, such as abandoned wells, sinkholes, or karst features:

There are no abandoned wells, sinkholes, or karst features located within the project area.

A22 Size of the project area expressed in acres:

The total project area is approximately 7 acres.

A23 Total expected land disturbance expressed in acres:

The total expected land disturbance is approximately 7 acres.

A24 Proposed final topography:

The individual plan sheets show proposed site topography and drainage patterns (West WWTP Site Grading Plan). Final topography is anticipated to be the same with the exception of the areas with new structures as identified in the plans (West WWTP Site Grading Plan).

A25 Locations and approximate boundaries of all disturbed areas:

The plans show the locations and boundaries of all disturbed areas/construction limits (Overall Work Plan and Future Plant Structure, West WWTP Site Demolition Plan, West WWTP Site Improvements Plan).

A26 Locations, size and dimensions of all stormwater drainage systems such as culverts, stormwater sewer, and conveyance channel:

The existing and proposed stormwater drainage systems are shown on the plans (West WWTP Site Piping Improvements Plan, New Storm Drain Outfall Plan and Profile, Erosion Control Plan). All existing stormwater systems will be protected and maintained during construction. If during construction any damage is done to an existing stormwater system, damaged structures will be either repaired or replaced to equal or better condition than existing.

A27 Locations of specific points where stormwater and non-stormwater discharges will leave the project site:

Locations where stormwater and non-stormwater discharges will leave the project site can be seen on the plans (Erosion Control Plan, New Storm Drain Outfall Plan and Profile).

A28 Location of all proposed site improvements, including roads, utilities, lot delineation and identification, proposed structures, and common areas:

Locations of all proposed site improvements are shown on the plans (West WWTP Site Improvements Plan, Overall Work Plan and Future Plant Structure). No off-site construction is expected for this project.

A29 Locations of all on-site and off-site soil stockpiles and borrow areas:

The locations of stockpiles and borrow areas are shown on the plans (Erosion Control Plan). Soil stockpiles shall be surrounded by silt fence or other perimeter controls. Soil stockpiles left inactive for (7) days or more shall be stabilized with temporary seed. All stockpiles and borrow areas will be located on-site and the contractor will be required to obtain a permit or release for proper disposal of excavated materials.

A30 Construction support activities that are expected to be part of the project:

Staging areas, material storage, and concrete washout areas are shown in the plans (Erosion Control Plan, Erosion Control Details).

A31 Location of any in-stream activities that are planned for the project including, but not limited to, stream crossings and pump arounds:

Some temporary work in streams may take place as part of the replacement of the existing 18" storm drain. (West WWTP Site Demolition Plan, New Storm Drain Outfall Plan and Profile).

Stormwater Pollution Prevention Plan - Construction Component (Section B)

Stormwater Pollution Prevention measures shall be in accordance with the Local Regulatory Authority and the applicable MS4 Stormwater Quality Standards.

B1 Description of the potential pollutant generating sources and pollutants, including all potential non-stormwater discharges:

Operation	Potential Pollutants
Clearing, grading, excavating	Sediment, Debris
Soil stockpiles	Sediment
Dewatering operations	Sediment
Paving repair	Sediment, Debris
Vehicle fueling, maintenance	Oil, grease, fuel
General construction activity	Trash, sanitation chemicals
Pavement restoration	Bituminous debris

Excavation, stockpiling:

Stockpile management procedures and practices will be implemented to minimize or eliminate the discharge of stockpiled material (soil, topsoil, base material) from entering drainage systems or surface waters.

For any stockpiles or land clearing debris composed, in whole or in part, of sediment or soil, the Contractor will be required to comply with the following requirements:

1. Locate piles within the designated limits of disturbance.
2. Protect from contact with stormwater using a temporary perimeter sediment barrier.
3. Where practicable, provide cover or appropriate temporary vegetative or structural stabilization to avoid direct contact with precipitation or to minimize the discharge of sediments.
4. Never hose down or sweep soil or sediment accumulated on pavement or other impervious surfaces into any stormwater conveyance, storm drain inlet, or surface water.
5. To the maximum extent practicable, contain and securely protect stockpiles from wind.

Dewatering:

Equipment operators are prohibited from discharging groundwater or accumulated stormwater that is removed from excavations, trenches, vaults, or other similar points of accumulation, unless such waters are effectively managed by appropriate control measures.

Examples of appropriate control measures include temporary sediment basins or sediment traps, sediment socks, dewatering tanks and bags, or filtration systems (e.g., bag or sand filters) that are designed to remove sediment. Uncontaminated, non-turbid dewatering water can be discharged without being routed to a control.

At a minimum, the following discharge requirements must be met for dewatering activities:

1. Allow no discharge of visible sediments or solids.
2. At all points where dewatering water is discharged, utilize velocity dissipation devices.
3. Dewatering practices must involve the implementation of appropriate control measures as applicable (i.e., containment areas for dewatering earth materials, portable sediment tanks and bags, pumping settling basins, and pump intake protection).

Vehicle Fueling:

Vehicle fueling shall not take place within regulated drain areas wetlands or buffer zone areas, or within 50 feet of the storm drain system. Designated areas shall be depicted on the Plans or shall be approved by the site owner.

Vehicle maintenance and washing shall occur off-site, or in designated areas depicted on the Plans or approved of by the site owner. Maintenance or washing areas shall not be within regulated wetlands or buffer zone areas, or within 50 feet of the storm drain system. Maintenance areas shall be clearly designated, and barriers shall be used around the perimeter of the maintenance area to prevent stormwater contamination.

Construction vehicles shall be inspected frequently for leaks. Repairs shall take place immediately. Disposal of all used oil, antifreeze, solvents, and other automotive-related chemicals shall be according to applicable regulations; at no time shall any material be washed down the storm drain or into any environmentally sensitive area.

After the SWPPP is implemented, all disturbed areas will be inspected at least once every seven (7) calendar days through the administration of a Self-Monitoring Program. The purpose of the Self-Monitoring Program reports, which are to be completed by a trained individual, is to assess the performance of pollutant control measures. Based on these inspections, it will be determined if additional measures are necessary to prevent pollutants from leaving the site. The Contractor will be required to repair, modify, maintain, or take additional steps as necessary to achieve effective pollutant control.

B2 Stable construction entrance locations and specifications:

Stable construction entrance locations are shown on the plans (Erosion Control Details). Upon completion of the construction all entrances shall be restored to match pre-existing conditions, with the exception of areas with new structures. Locations where vehicles enter and exit the site will be inspected for evidence of off-site sediment tracking. At the end of construction, the Contractor shall restore existing surfaces acting as construction entrances/exits to pre-construction conditions.

B3 Specifications for temporary and permanent stabilization:

Temporary and permanent seed surface stabilization will be utilized where needed (Erosion Control Details).

In order to reduce the extent of exposed areas and the duration of exposure, clearing, grading, and vegetative re-stabilization must be properly timed and coordinated. Seeding and mulching or temporary seeding will be performed as soon as practicable on areas which have been disturbed by construction. Unvegetated areas that are left idle or scheduled to be left unactive must be temporarily or permanently stabilized with measures appropriate for the season to minimize erosion potential. Stabilization must be initiated by the end of the seventh day the area is left idle. The stabilization activity must be completed within fourteen (14) days after initiation. Initiation of stabilization includes seeding and applying mulch or other temporary surface stabilization methods where appropriate. Biodegradable matting or netting may be used to stabilize soils on sloped areas and some recently planted areas to protect seedlings until they have become established. Temporary seeding or erosion control mats are to be used to stabilize exposed surfaces if final grading and seeding must be delayed.

B4 Sediment control measures for concentrated flow areas:

Protective measures for areas of concentrated flow will include temporary and permanent vegetation, mulches, erosion control blankets, check dams, or other practices to correspond with construction activities (Erosion Control Details). Sediment control measures for areas of concentrated flow are not anticipated as necessary for any specific areas of the proposed project. Sediment control measures for areas of concentrated flow will be provided as needed by the Contractor.

B5 Sediment control measures for sheet flow areas:

All disturbed areas, where runoff will be in sheet flow condition and which are not to be disturbed for seven (7) days or more, shall receive temporary seeding. Disturbed areas shall be permanently seeded immediately after land disturbance activities are completed. Perimeter protection, such as silt fence and inlet protection, shall be placed at locations shown on the plans. In general, silt fences will be installed approximately five (5) feet from property boundaries/right of way boundaries as applicable. Installation of silt fences will typically be required on the downslope side of all open trenches excavated for storm sewer installation. The plans show additional erosion control measures proposed for this project (Erosion Control Plan).

B6 Runoff control measures:

Diversion ditches, check dams, slope drains, or other similar structures for runoff control are not anticipated for this project.

B7 Stormwater outlet protection specifications:

Details on the new storm drain outfall are included in the plans (New Storm Drain Outfall Plan and Profile).

B8 Grade stabilization structure locations and specifications:

Grade stabilization will be done as needed during construction. Grade stabilization requirements are established in the plans (Erosion Control Plan, Erosion Control Details, West WWTP Site Grading Plan).

B9 Dewatering applications and management methods:

If dewatering becomes necessary on site, the following methods will be used, with details included in the plans (Erosion Control Details).

Equipment operators are prohibited from discharging groundwater or accumulated stormwater that is removed from excavations, trenches, vaults, or other similar points of accumulation, unless such waters are first effectively managed by appropriate control measures.

Examples of appropriate control measures include temporary sediment basins or sediment traps, sediment socks, dewatering tanks and bags, or filtration systems (e.g. bag or sand filters) that are designed to remove sediment. Uncontaminated, non-turbid dewatering water can be discharged without being routed to a control.

At a minimum, the following discharge requirements must be met for dewatering activities:

1. Allow no discharge of visible sediments or solids.
2. At all points where dewatering water is discharged, utilize velocity dissipation devices.
3. Dewatering practices must involve the implementation of appropriate control measures as applicable (i.e. containment areas for dewatering earth materials, portable sediment tanks and bags, pumping settling basins, and pump intake protection).

B10 Measures utilized for work within waterbodies:

Some temporary work within/adjacent to Cypress Creek are anticipated for replacement of the existing storm drain outfall. Plan and profile for construction are found in the plans (New Storm Drain Outfall Plan and Profile), with details on the structure of the outfall headwall also found in the plans (Miscellaneous Details VI).

B11 Maintenance guidelines for each proposed stormwater quality measure:

Throughout the duration of construction, the Contractor shall monitor and manage project construction and stormwater activities through the administration of a Self-Monitoring Program (SMP). A trained individual shall submit weekly SMP reports, and event inspection reports as required within 24 hours of every ½" rain event. Inspection will be provided for all erosion and sediment control structures to ensure integrity and effectiveness. Inspections will also be provided for all disturbed areas that have not achieved final stabilization, and at all points of discharge from the construction site.

B12 Planned construction sequence that describes the implementation of stormwater quality measures in relation to land disturbance:

A Pre-Construction Meeting will be required prior to commencement of construction and any land disturbance activity. Attendees to the Pre-Construction Meeting will include representatives of the Contractor, Owner, and Engineer. The Warrick County MS4 shall be provided with a 48-hour notice prior to the commencement of land disturbing activity.

The Notice of Intent and the location of the Storm Water Pollution Prevention Plan (SWPPP) will be posted at the job site. There will be fuel containment and concrete washout provided on-site, if applicable.

Project sequencing will generally follow the following steps:

1. Obtain the necessary project permits, including permits from IDEM and DNR.
2. Notify the appropriate regulatory agencies at least 48 hours prior to the start of land disturbing activity.
3. Establish the construction entrance in the location(s) indicated by the plans.
4. Install perimeter control measures (silt fence, etc.). Clear only what is required for sufficient access and installation of the perimeter measures.
5. Proceed with clearing, grading, and other construction activities, regularly inspect and maintain all E&SC measures throughout active construction.
6. Establish temporary seeding as needed throughout the project per specifications.
7. Establish permanent seeding.
8. Temporary E&SC measures are only to be removed once all land-disturbing activity is complete and the site has 80% permanent vegetative coverage.
9. Notify the appropriate regulatory agencies of project completion. Submit the Notice of Termination to close out the permit.

B13 Provisions for erosion and sediment control on individual building lots regulated under the proposed project:

All proposed improvements are taking place on rights of way, utility easements, or land owned by the Town. The project area and individual area erosion control is depicted in plans (Erosion Control Plan).

For Public Viewing Only-Not For Download

COMMONWEALTH ENGINEERS, INC.
A wealth of resources to master a common goal.
https://commonwealthengineers.com/

RUDOLPH J. NOLTICH
REGISTERED
No. PE19400077
INDIANA
PROFESSIONAL ENGINEER

Signature 10/03/2025 Date

TOWN OF NEWBURGH
WARRICK COUNTY, INDIANA

WASTEWATER TREATMENT
PLANT FLOW EQ BASIN

© 2025 BY COMMONWEALTH ENGINEERS, INC.: ALL RIGHTS RESERVED. REPRODUCTION IN ANY MEDIUM, IN WHOLE OR IN PART WITHOUT PERMISSION IS PROHIBITED

Indiana 811 Know what's below. 811 before you dig 1-800-382-5544 (ITS THE LAW)

No.	Submittal / Revision	By	Date

Designed By:	Drawn By:	Checked By:
DOF	DMJ	ETP
Issue Date: 5-11-2023	Project No: S18005-041	Scale: AS SHOWN

SWPPP NOTES I

Drawing No: **EC1**

Sheet: 61 OF 161

File: Z:\SHARED\IN CLIENTS M-Z\NEWBURGH\S18005 ON CALL SEWER ENG SVCS\041 WWTP FLOW EQ BASIN\05 CADA CURRENT FILES\1 DRAWINGS\05 SWPPP DRAWINGS - NEWBURGH EQ.DWG
Saved: 9/30/2025 3:02:46 PM Plotted: 10/2/2025 2:09:01 PM Current User: Drew.Jenkins LastSavedBy: djenkins

B14 Material handling and spill prevention and spill response plan meeting the requirements in 327 IAC 2-6.1:

The Contractor will be required to inspect equipment regularly to avoid unnecessary leaks or spills. The Contractor will also be required to provide spill kits and equipment to contain and clean up any petroleum products or other undesirable spills which may occur during construction.

Fuels, oils, grease, or other petroleum products must be stored in appropriate and approved areas. Preventative maintenance will be required for on-site equipment. Hazardous materials will be required to be stored in a field trailer to avoid any outside storage.

All fuel is to be contained in a mobile service truck or in the construction equipment operating on site. Small containers of oils, grease, and related products may be stored in the contractor's construction trailer. These items will be required to be inspected regularly to ensure proper storage and handling and to guard against leakage. Defective containers will be removed from the project site immediately.

If a spill does occur, spill reporting and notification requirements will be undertaken in accordance with Occupational Safety and Health Administration and State requirements. The Contractor will be required to provide response procedures that will minimize groundwater and surface water impacts.

Contact Information for local and state agencies to be contacted in the event of a spill are as follows:

Warrick County Storm Water Department
107 W. Locust Street, Suite 208
Boonville, IN 47601
812-897-8632

Indiana Department of Environmental Management
Office of Land Quality
Emergency Response and Spill Reporting Section
Phone: 1-888-233-7745

Indiana Department of Environmental Management
Office of Water Quality
Indiana Government Center North
100 N. Senate Avenue, Room N1255
Indianapolis, Indiana 46204
Phone: 1-888-233-7745

Indiana Department of Natural Resources
District 7 Headquarters
2310 East State Road 364
Winslow, IN 47598
Phone: 812-789-9538

Indiana Department of Transportation
Traffic Management Center
Phone: 317-899-8690

B15 Material handling and storage procedures associated with construction activity:

Fuels, oils, grease, or other petroleum products must be stored in appropriate and approved areas. Preventative maintenance will be required for on-site equipment. Hazardous materials will be required to be stored in a field trailer to avoid any outside storage.

All fuel is to be contained in a mobile service truck or in the construction equipment operating on site. Small containers of soils, grease, and related products may be stored in the contractor's construction trailer. These items will be required to be inspected regularly to ensure proper storage and handling and to guard against leakage. Defective containers will be removed from the project site immediately.

Concrete washout areas are shown on the plans (Erosion Control Details).

Stormwater Pollution Prevention - Post-Construction Component (Section C)

C1 Description of pollutants and their sources associated with the proposed land use:

Final land use will change for portions of the project as depicted in the plans (Overall Work Plan and Future Plant Structure) and **Exhibit #3**. Forested land will be converted to developed land where proposed facilities are constructed.

Potential pollutants from this project after construction is completed include:

- Sediment
- Hydrocarbons
- Construction litter

Sediments:

Sediment pollution is a result of erosion which can be triggered by natural causes or human activity. For this project, sedimentation may occur due to runoff from excavated trench areas. Sediment pollution may also be caused by on-site storage of excavated materials, backfill materials, and construction spoil areas.

Hydrocarbons:

Leakage and spill potential exists from items such as gasoline, oil, grease, vehicle brake and transmission fluids, antifreeze, and coolants.

Construction Litter:

Litter may be generated by improperly discarded items such as plastic bottles or aluminum cans, bags, product packing materials, general trash, garbage, and smoking paraphernalia.

C2 Description of proposed post-construction stormwater quality measures:

Permanent seeding and erosion control blankets are the only post construction stormwater quality measures that are anticipated to be needed. Details on erosion control blankets and associated seeding are included in the plans (Erosion Control Details).

Vegetated Areas:
Permanent seeding will be applied immediately after the final design grades are achieved on portions of the site but no later than seven (7) days after construction activities have permanently ceased. After the entire site is stabilized, any sediment that has accumulated that has not been incorporated into the final grading operations will be removed and hauled off-site for disposal at an approved landfill. Construction debris, trash, and temporary erosion control structures will be removed, and any areas disturbed during removal will be seeded immediately.

Native grasses will be used for restoration of vegetated areas. All vegetated areas disturbed by construction activities will be required to be restored. The vegetative cover shall be in accordance with the project specifications and shall be:

(a) effective and permanent.
(b) at least equal in extent of cover to the natural vegetation of the area; and
(c) capable of stabilizing the soil surface to control erosion.
(d) compatible with the local land use.
(e) have the same seasonal growth characteristics as the original vegetation.
(f) be capable of self-regeneration and plant succession.
(g) be compatible with the plant and animal species of the area.

Spoil areas and imported backfill materials must be always covered and placed as far away as practicable from stormwater quality measures. Pesticides, herbicides, and fertilizers are to be applied in minimal amounts. These items are not to be applied within 24 hours of a forecasted rain event.

Pesticide and fertilizer applicators will be expected to maximize the benefits of the products through sound management while reducing environmental risks. Applicators should take all necessary preventative measures to ensure that pesticides stay on-site. Careful transportation, secure storage, proper disposal of containers, and spill prevention are basic elements of safe pesticide use which must be implemented. The applicator will also be expected to be aware of the location of sensitive areas, including sinkholes, depressions, wells, streams, and surface waters. A buffer zone should be in effect when applying pesticides around these sites.

Fertilizer applicators will be required to understand and follow product labels to minimize risks to human health and the environment. Chemicals with low water solubility rates should be used. The containers holding fertiilizers and herbicides are to be emptied completely before disposal.

Hydrocarbons and Hazardous Materials:

Hydrocarbons, such as fuels and oils will be used for the excavation equipment and trucks. Appropriate storage areas for fuels and hydrocarbons will be provided. Lubricating oils and greases for vehicles and generators will be stored under cover, in drums, or appropriate containers in a designated area.

The fuel and chemical storage and handling facilities will be inspected on a regular basis and maintained to ensure compliance with applicable standards. The Contractor shall designate the responsible personnel who will have access to safety equipment required for the correct handling of hazardous goods and access to strategically placed spill stations equipped with the necessary equipment for cleaning up any spills.

The contractor shall provide a procedure for clean-up and reporting, in the event of a spill. Any spills will be cleaned up immediately. Contaminated runoff and contaminated soil will be collected and remediated on site or transported to a suitable facility for disposal.

A close-out procedure will be used in the event of spills, to assess whether any change to procedures, equipment or responsibility is required, to minimize the future likelihood of event recurrence.

Post-Construction Stormwater Journal:
Following completion of construction, inspections should be provided annually and after each major rainfall event of 4" or greater. The Contractor will be required to provide these inspections for a one-year warranty period following the issuance of a certificate of substantial completion for the project. All erosion control measures showing signs of damage or failure must be corrected. Sediment accumulations are to be returned to their source. Corrective measures must be taken to prevent further sediment accumulation. Measures such as seeding, sod, erosion control blankets, and related methods are to be incorporated as needed to prevent sediment accumulations within the project area.

Post-Construction Estimates of Water Quality Volume:

When impervious surfaces are added to a project site, post-construction stormwater quality measures must be sized to treat the Water Quality Volume (WQv) or water quality flow rates. Indiana utilizes a one (1) inch precipitation depth to calculate WQv, which is a sufficient depth to minimize pollutants and reduce channel and stream bank erosion.

The preferred equation to calculate water quality volume (WQv) is:

WQv = Rv x A x P

Where:

Rv = Run-off coefficient, Rv = 0.05 + 0.9i

Variable	Definition
WQv	"Water Quality Volume" is the volume of stormwater run-off which must be captured and treated prior to discharge from the developed site after construction is complete. WQv is based on the expected run-off generated by the mean storm precipitation volume from post-construction site conditions at which rapidly diminishing returns in the number of run-off events captured begins to occur.
A	"Drainage Area" is the total surface area that will drain to a certain point, such as a detention basin inlet.
P	"Precipitation Depth" is the depth of design storm that is used to treat most storm events. The standard in Indiana is one (1) inch of rainfall over 24 hours. This corresponds to the 90th percentile of events, and therefore, provides treatment for most events.
Rv	"Run-off Volumetric Coefficient" is the fraction of total rainfall that will appear at the outlet as run-off.
i	"Percentage of Impervious Area" is the fraction of the drainage area that is impervious.

The intended project is anticipated to change some general surface conditions. Land use in the project area will have changes in portions of the area. Some impervious surfaces will be added at the site. Generally, areas with unchanged land use will be restored to existing conditions or better.

Pre-construction WQv for the project area:

i = 0.15*

*Approximated from aerial images: project area is approximately 15% roadways & low-density developed space.

Rv = 0.05 + 0.9(0.15) = 0.185

WQv = 0.185 x 7 acres x 1.0 inch = 1.25 acre-inch

Post-construction WQv for the project area:

i = 0.40*

*Approximate additional impervious surface = 2.5 acres = Additional 40% impervious surface including new facilities and gravel drive

Rv = 0.05 + 0.9(0.4) = 0.41

WQv = 0.41 x 7 acres x 1.0 inch = 2.87 acre-inch

C3 Plan details for each stormwater quality measure:

Details for each stormwater quality measure are included in the plans. Permanent seeding will be provided for all portions of the project which are disturbed by construction activities and which are not covered by permanent rigid pavement or aggregate surface. Silt fencing and other erosion protection measures will not be removed until the permanent seeding has been established.

C4 Sequence describing stormwater quality measure implementation:

Post-construction sequencing measures for this project will be as follows:

1. Temporary plantings will be provided in critical areas devoid of vegetation and subject to erosion. Such temporary plantings may be necessary to protect an area when preparing for winter shut down or to provide cover when permanent seedlings are likely to fail due to an extended period of heat or drought. The intent of these plantings is to provide protective cover while waiting for optimal planting conditions.

2. Removal and cleanup of all temporary erosion control measures including silt fences, inlet and culvert protection areas and check dams.

3. The entire construction area is to be inspected and cleaned, including the collection and disposal of construction trash and debris.

4. Permanent seeding and mulching will be installed immediately after achieving final grade or within seven (7) days of inactivity. If necessary, a temporary stabilization practice will be employed until the next prime seeding period.

5. A final site inspection will take place to assure that all requirements of the SWPPP, construction drawings, and supporting documents have been fulfilled.

C5 Maintenance guidelines for proposed post-construction water quality measures:

Maintenance of Stormwater Quality Control Measures

All stormwater quality control measures are to remain in place until permanent vegetative cover has been established. This includes silt fencing, inlet protection, and culvert entrance check dam structures. Fabric tears, post failures, vehicle damage, or undermining of the silt fence are to be repaired immediately. Sediment buildup along silt fences will be removed if it reaches 1/3 the height of the silt fence above the ground elevation.

Vegetated Areas

Vegetated areas within the project boundaries must be maintained on a regular basis during the active growing season. Maintenance activities will include inspection of sparsely seeded areas, and reseeding areas which have been damaged or which have not exhibited a successful and hardy stand of vegetal cover

C6 Entity responsible for operation and maintenance of the post-construction stormwater measures:

The Town of Newburgh will be responsible for the operation and maintenance of post-construction stormwater measures.

For Public Viewing Only - Not For Downloading

COMMONWEALTH ENGINEERS, INC.
A wealth of resources to master a common goal.
https://commonwealthengineers.com/

RUDOLPH J. NOVITCH
REGISTERED
No. PE19400077
INDIANA
PROFESSIONAL ENGINEER

Signature 10/03/2025 Date

TOWN OF NEWBURGH
WARRICK COUNTY, INDIANA

WASTEWATER TREATMENT
PLANT FLOW EQ BASIN

© 2025 BY COMMONWEALTH ENGINEERS, INC. ALL RIGHTS RESERVED. REPRODUCTION BY ANY METHOD, IN WHOLE OR IN PART WITHOUT PERMISSION IS PROHIBITED

Know what's below. 811 before you dig.
1-800-382-5544
(IT'S THE LAW)

No.	Submittal / Revision	By	Date

Designed By:	Drawn By:	Checked By:
DOF	DMJ	ETP
Issue Date: 5-11-2023	Project No: S18005-041	Scale: AS SHOWN

SWPPP NOTES II

Drawing No:
EC2
Sheet: 62 OF 161

File: Z:\SHARED\IN CLIENTS M-Z\NEWBURGH\S18005 ON CALL SEWER ENGS\VCS\041 WWTP FLOW EQ BASIN\06 CADA CURRENT FILES\01 DRAWINGS\06-SWPPP DRAWINGS - NEWBURGH EQ.DWG
Saved: 9/30/2025 3:02:46 PM Plotted: 10/2/2025 2:09:11 PM Current User: Drew Jenkins LastSavedBy: djenkins

Exhibit#1 USGS Topographic Map

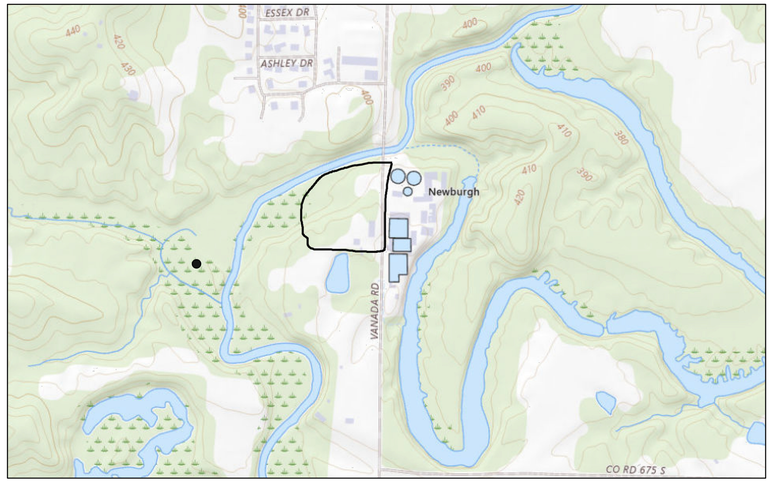

5/20/2025

USGS The National Map: National Boundaries Dataset, 3DEP Elevation Program, Geographic Names Information System, National Hydrography

Exhibit#3 Land Use Map

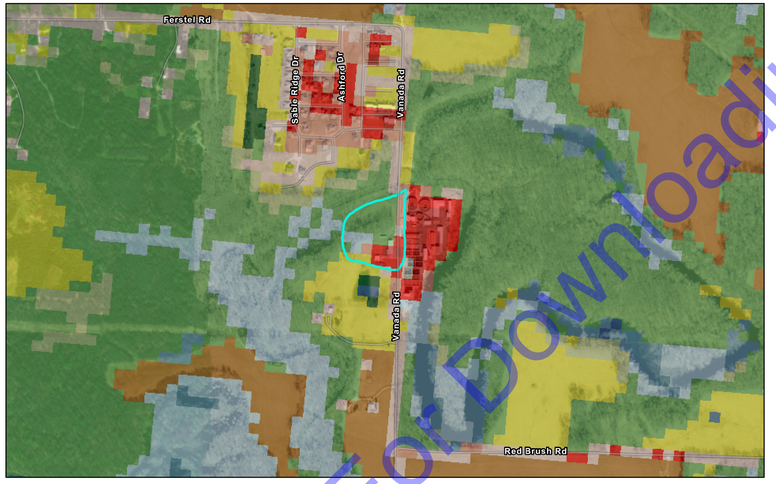

5/20/2025

NLCD Land Cover 2021
- Open Water
- Developed, Open Space
- Developed, Low Intensity
- Developed, Medium Intensity
- Developed, High Intensity
- Barren Land
- Deciduous Forest
- Evergreen Forest
- Mixed Forest
- Herbaceous
- Hay/Pasture
- Cultivated Crops
- Woody Wetlands
- Emergent Herbaceous Wetlands
- World Imagery
- Low Resolution 15m Imagery
- High Resolution 60cm Imagery
- High Resolution 30cm Imagery
- Citations
- 2.4m Resolution Metadata

1:10,749

0 0.05 0.1 0.2 mi

0 0.1 0.2 0.4 km

IGIO, Maxar, Sources: Esri, TomTom, Garmin, FAO, NOAA, USGS, (c) OpenStreetMap contributors, and the GIS User Community

Exhibit #6 Surface Waters Map

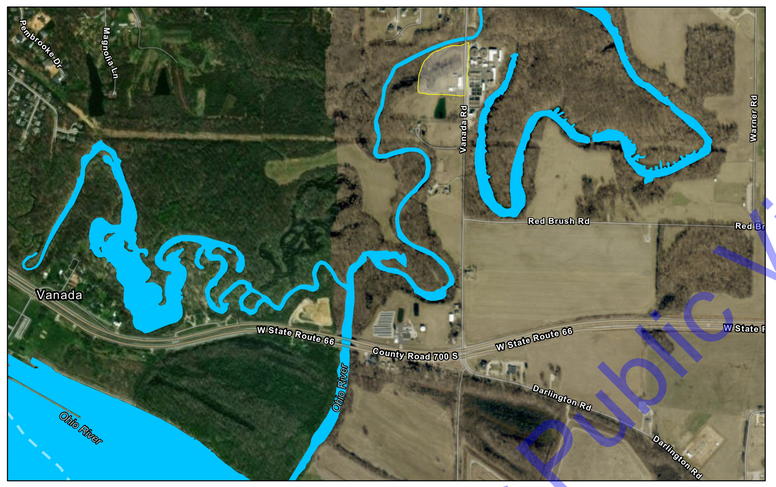

5/20/2025

NHD Rivers, Streams, Canals, etc - Linear Water Bodies
- StreamRiver

World Imagery

Low Resolution 15m Imagery

High Resolution 60cm Imagery

High Resolution 30cm Imagery

Citations

1:15,709

0 0.1 0.2 0.4 mi

0 0.15 0.3 0.6 km

IGIO, Maxar, Sources: Esri, TomTom, Garmin, FAO, NOAA, USGS, (c) OpenStreetMap contributors, and the GIS User Community

For Public Viewing Only-Not For Downloading

COMMONWEALTH ENGINEERS, INC.
A wealth of resources to master a common goal.
https://commonwealthengineers.com/

RUDOLPH J NOTTICH
REGISTERED
No. PE19400077
INDIANA
PROFESSIONAL ENGINEER

Signature 10/03/2025 Date

TOWN OF NEWBURGH
WARRICK COUNTY, INDIANA

WASTEWATER TREATMENT
PLANT FLOW EQ BASIN

© 2025 BY COMMONWEALTH ENGINEERS, INC.: ALL RIGHTS RESERVED. REPRODUCTION BY ANY METHOD, IN WHOLE OR IN PART WITHOUT PERMISSION IS PROHIBITED

Indiana 811
Know what's below. 811 before you dig.
1-800-382-5544
(ITS THE LAW)

No.	Submittal / Revision	By	Date

Designed By:	Drawn By:	Checked By:
DOF	DMJ	ETP
Issue Date:	Project No:	Scale:
5-11-2023	S18005-041	AS SHOWN

SWPPP FIGURES I

Drawing No:
EC3
Sheet: 63 OF 161

File: Z:\SHARED\IN CLIENTS M-Z\NEWBURGH\S18005 ON CALL SEWER ENG SVC\S041 WWTP FLOW EQ BASIN\05 CADA CURRENT FILES\1 DRAWINGS\05-SWPPP DRAWINGS - NEWBURGH EQ.DWG
Saved: 9/30/2025 3:02:46 PM Plotted: 10/2/2025 2:09:21 PM Current User: Drew Jenkins LastSavedBy: djenkins

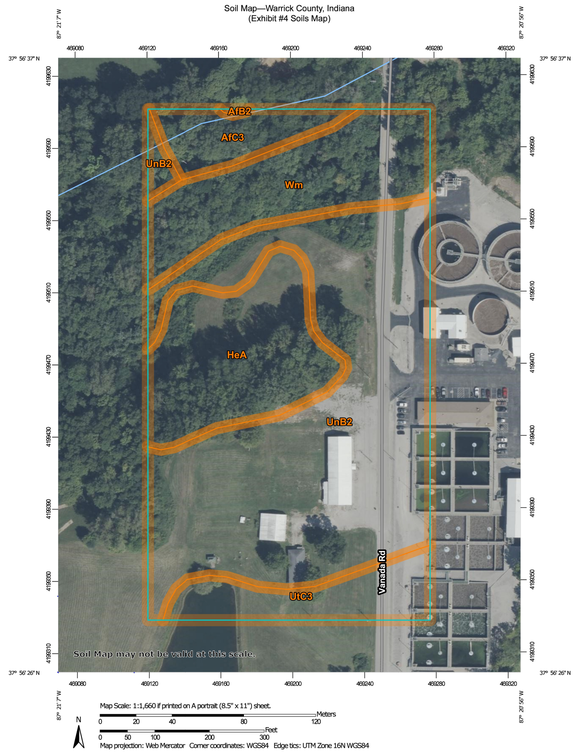

USDA **Natural Resources Conservation Service** | Web Soil Survey, National Cooperative Soil Survey | 5/20/2025 Page 1 of 3

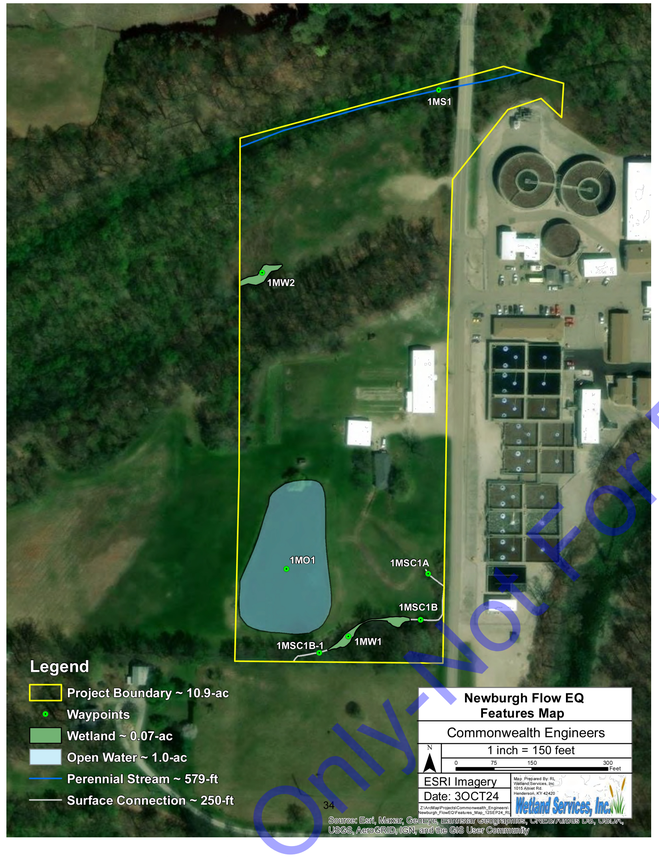

For Public Viewing Only-Not For Downloading

DNR Indiana Department of Natural Resources

Floodplain Analysis & Regulatory Assessment (FARA)

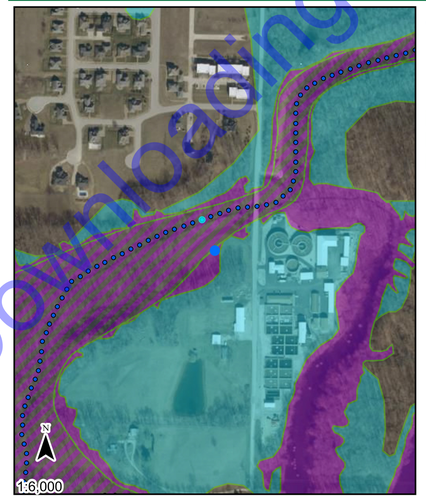

- Point of Interest
- Base Flood Elevation Point
- POI
- 1.0
- DNR Approximate Floodway
- FEMA Zone AE
- DNR Approximate Fringe
- Not Mapped

Long: **-87.35066064690231**
Lat: **37.94273625141425**

The information provided below is based on the point of interest shown in the map above.

County: **Warrick**
Stream Name: **Cypress Creek**
Approximate Ground Elevation: **377.5 feet (NAVD88)**
Base Flood Elevation: **382.5 Feet (NAVD88)**
Drainage Area: **Not Available**

Best Available Flood Hazard Zone: **DNR Approximate Fringe**
National Flood Hazard Zone: **FEMA Zone AE**
Is a Flood Control Act permit from the DNR needed for this location? **See following pages**
Is a local floodplain permit needed for this location? **yes-**
Floodplain Administrator: **Molly Barnhill, Executive Director**
Community Jurisdiction: **Warrick County, County proper**
Phone: **(812) 897-6190**
Email: **mbarnhill@warrickcounty.gov**
US Army Corps of Engineers District: **Louisville**

Date Generated: 11/19/2024

Soil Map—Warrick County, Indiana
(Exhibit #4 Soils Map)

MAP LEGEND

Area of Interest (AOI)
- Area of Interest (AOI)

Soils
- Soil Map Unit Polygons
- Soil Map Unit Lines
- Soil Map Unit Points

Special Point Features
- Blowout
- Borrow Pit
- Clay Spot
- Closed Depression
- Gravel Pit
- Gravelly Spot
- Landfill
- Lava Flow
- Marsh or swamp
- Mine or Quarry
- Miscellaneous Water
- Perennial Water
- Rock Outcrop
- Saline Spot
- Sandy Spot
- Severely Eroded Spot
- Sinkhole
- Slide or Slip
- Sodic Spot
- Spoil Area
- Stony Spot
- Very Stony Spot
- Wet Spot
- Other
- Special Line Features

Water Features
- Streams and Canals

Transportation
- Rails
- Interstate Highways
- US Routes
- Major Roads
- Local Roads

Background
- Aerial Photography

MAP INFORMATION

The soil surveys that comprise your AOI were mapped at 1:15,800.

Warning: Soil Map may not be valid at this scale.

Enlargement of maps beyond the scale of mapping can cause misunderstanding of the detail of mapping and accuracy of soil line placement. The maps do not show the small areas of contrasting soils that could have been shown at a more detailed scale.

Please rely on the bar scale on each map sheet for map measurements.

Source of Map: Natural Resources Conservation Service
Web Soil Survey URL:
Coordinate System: Web Mercator (EPSG:3857)

Maps from the Web Soil Survey are based on the Web Mercator projection, which preserves direction and shape but distorts distance and area. A projection that preserves area, such as the Albers equal-area conic projection, should be used if more accurate calculations of distance or area are required.

This product is generated from the USDA-NRCS certified data as of the version date(s) listed below.

Soil Survey Area: Warrick County, Indiana
Survey Area Data: Version 27, Aug 23, 2024

Soil map units are labeled (as space allows) for map scales 1:50,000 or larger.

Date(s) aerial images were photographed: Apr 10, 2023—Oct 10, 2023

The orthophoto or other base map on which the soil lines were compiled and digitized probably differs from the background imagery displayed on these maps. As a result, some minor shifting of map unit boundaries may be evident.

USDA **Natural Resources Conservation Service** | Web Soil Survey, National Cooperative Soil Survey | 5/20/2025 Page 2 of 3

COMMONWEALTH ENGINEERS, INC.
A wealth of resources to master a common goal.
https://commonwealthengineers.com/

RUDOLPH J. NOVITCH
REGISTERED
No. PE19400077
INDIANA
PROFESSIONAL ENGINEER

Signature 10/03/2025 Date

TOWN OF NEWBURGH
WARRICK COUNTY, INDIANA

WASTEWATER TREATMENT
PLANT FLOW EQ BASIN

© 2025 BY COMMONWEALTH ENGINEERS, INC. ALL RIGHTS RESERVED. REPRODUCTION BY ANY METHOD, IN WHOLE OR IN PART WITHOUT PERMISSION IS PROHIBITED

Indiana811 Know what's below. 811 before you dig. 1-800-382-5544 (ITS THE LAW)

No.	Submittal / Revision	By	Date

Designed By:	Drawn By:	Checked By:
DOF	DMJ	ETP
Issue Date: 5-11-2023	Project No: S18005-041	Scale: AS SHOWN

SWPPP FIGURES II

Drawing No: **EC4**

Sheet: 64 OF 161

File: Z:\SHARED\IN CLIENTS M-Z\NEWBURGH\S18005 ON CALL SEWER ENG S\VCS041 WWTP FLOW EQ BASIN\05 CADA CURRENT FILES\1 DRAWINGS\05 SWPPP DRAWINGS - NEWBURGH EQ.DWG
Saved: 9/30/2025 3:02:46 PM Plotted: 10/2/2025 2:09:29 PM Current User: Drew Jenkins LastSavedBy: djenkins

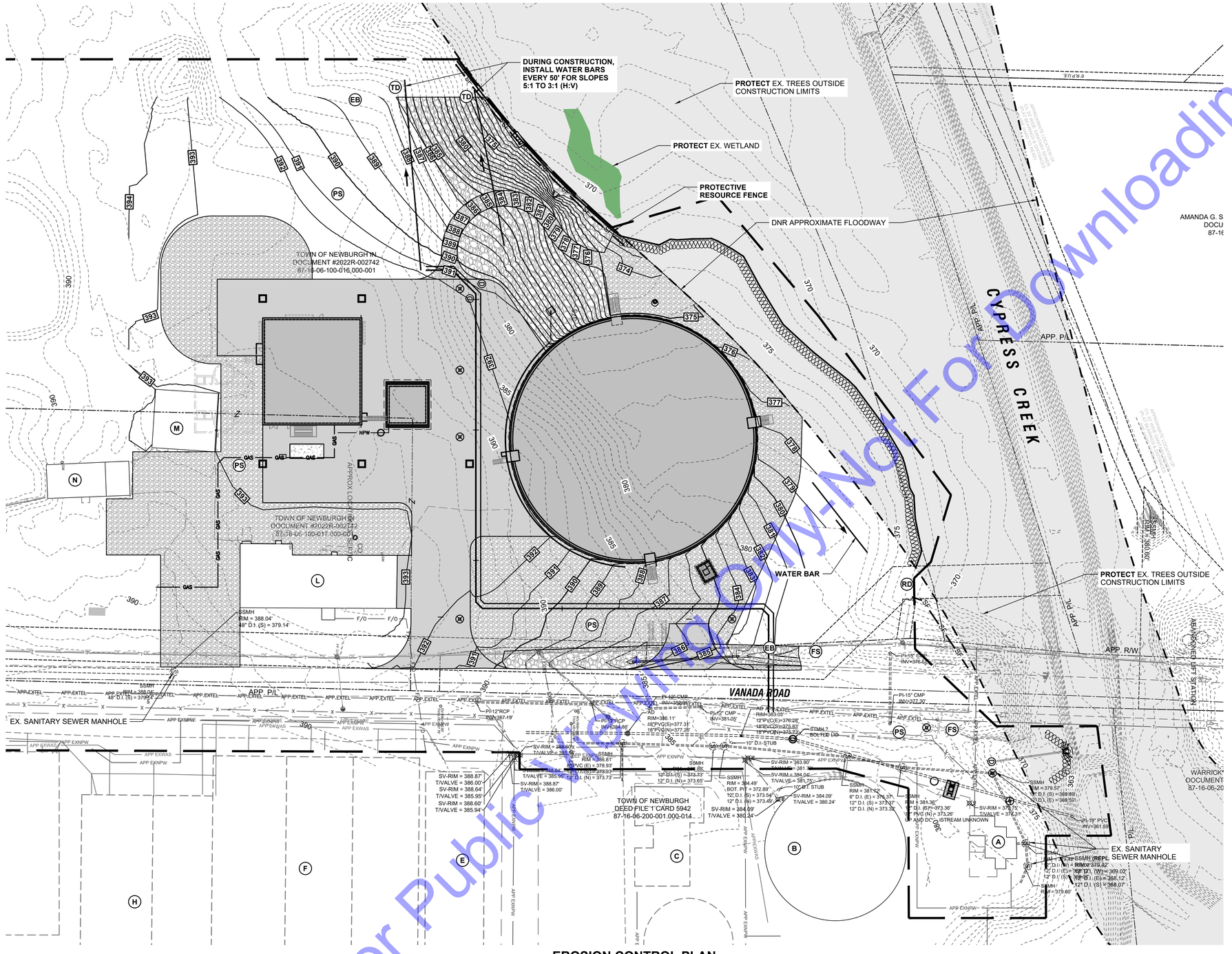
DURING CONSTRUCTION, INSTALL WATER BARS EVERY 50' FOR SLOPES 5:1 TO 3:1 (H:V)
PROTECT EX. TREES OUTSIDE CONSTRUCTION LIMITS
PROTECT EX. WETLAND
PROTECTIVE RESOURCE FENCE
DNR APPROXIMATE FLOODWAY
WATER BAR
VANADA ROAD
CYPRESS CREEK
TOWN OF NEWBURGH IN DOCUMENT #2022R-002742 87-16-06-100-016,000-001
TOWN OF NEWBURGH DEED FILE T CARD 5942 87-16-06-200-001.000-014
AMANDA G. S DOCU 87-16
WARRICK DOCUMENT 87-16-06-20
EX. SANITARY SEWER MANHOLE
APP. P/L
APP. R/W
ABANDONED LIFT STATION
APPROX LOCATION OF SEPTIC CONDUCTOR
SSMH RIM = 388.04' 48" D.I. (S) = 379.14'
SSMH RIM = 388.06' 48" D.I. (S) = 379.06'
SSMH RIM = 386.11' 18"PVC(S)=377.31' 18"PVC(N)=377.26'
SSMH RIM = 383.03' 12"PVC(E)=376.26' 18"PVC(S)=375.83' 18"PVC(N)=375.73'
SSMH RIM = 384.49' BOT. P/T = 372.89' 12" D.I. (S) = 373.54' 12" D.I. (N) = 373.49'
SSMH RIM = 384.04' T/VALVE = 381.75' 10" D.I. STUB
SSMH RIM = 383.90' T/VALVE = 381.75'
SSMH RIM = 381.36' 6" D.I. (S/P)=379.36' 10" PVC (N) = 373.26' UP AND DOWNSTREAM UNKNOWN
SSMH RIM = 379.57' 12" D.I. (S) = 369.89' 12" D.I. (E) = 369.52'
SSMH RIM = 379.60' 12" D.I. (E) = 369.02' 12" D.I. (W) = 369.02' 12" D.I. (E) = 368.12' 12" D.I. (S) = 368.07'
SSMH RIM = 379.60'
SV-RIM = 388.87' T/VALVE = 386.00' SV-RIM = 388.64' T/VALVE = 385.95' SV-RIM = 388.60' T/VALVE = 385.94'
SV-RIM = 388.60' T/VALVE = 385.95' SV-RIM = 388.87' T/VALVE = 386.00'
SV-RIM = 384.09' T/VALVE = 380.24'
SV-RIM = 384.09' T/VALVE = 380.24'
SV-RIM = 378.93' 12" D.I. (S) = 373.93' 12" D.I. (N) = 373.73'
12" D.I. (S) = 373.73' 12" D.I. (N) = 373.65'
PI-12"RCP INV=384.66'
PI-12"RCP INV=387.19'
PI-12" CMP INV=381.05'
PI-15" CMP INV=377.97'
PI-18" CMP INV=376.67'
PI-18" PVC INV=361.89'
FI-12" CMP INV=382.81'
STMH ? BOLTED LID
10" D.I. STUB
APP. EXTEL
APP. EXNPW
APP. EXWAS
APP. EXSAN
APP. EXWW
APP. EXNPW
APP. EXWW
APP. EXNPW
APP. EXWW
APP. EXNPW

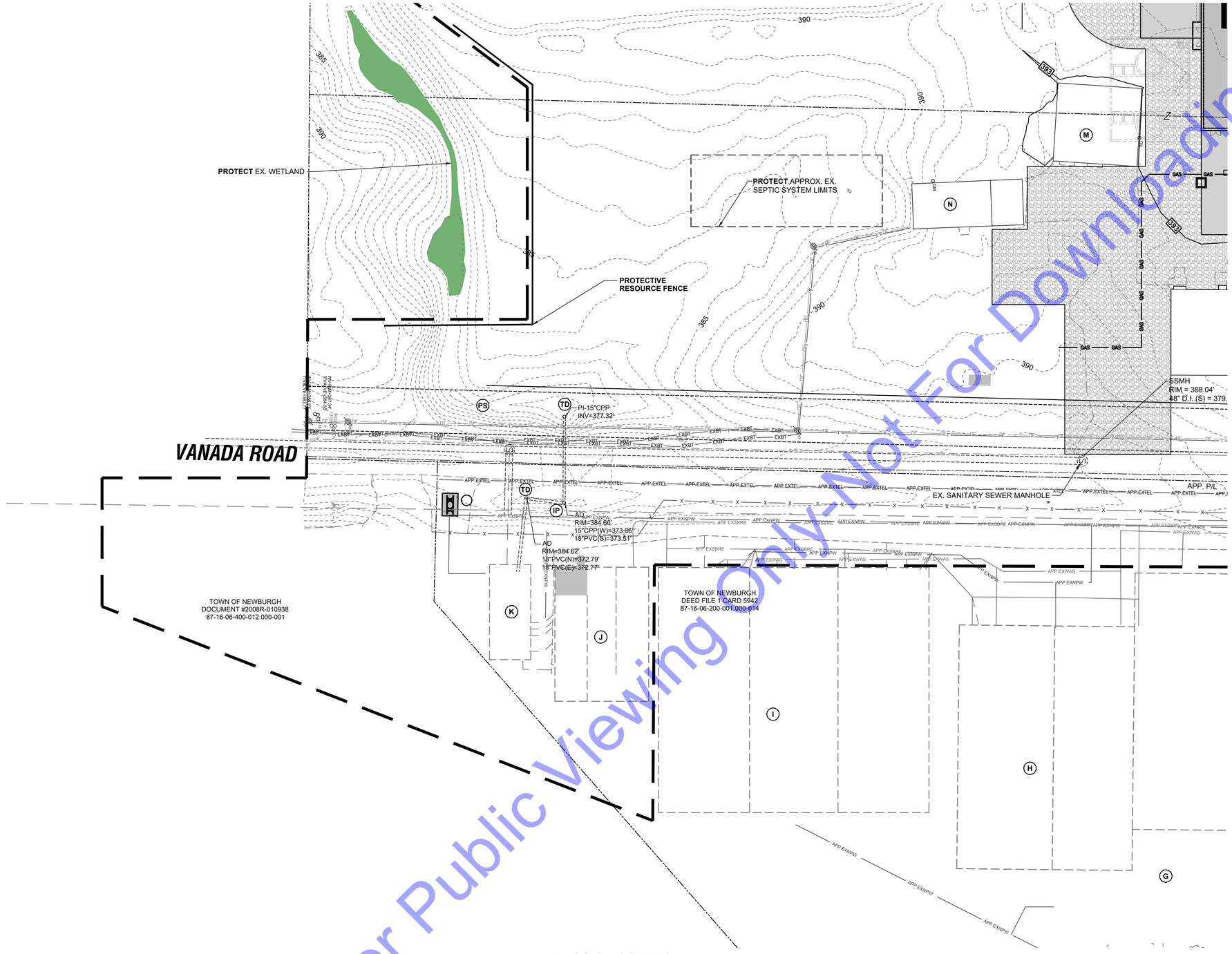

EROSION CONTROL PLAN

SCALE: 1"=30'-0"

0 30' 60'

EXISTING STRUCTURES	
IDENTIFIER	DESCRIPTION
A	EX. LIFT STATION NO. 3 (PLANT INFLUENT LS)
B	EX. SLUDGE TREATMENT UNITS
C	EX. SLUDGE BLOWER BUILDING
D	EX. SLUDGE STORAGE TANK
E	EX. LAB / ADMINISTRATION TRAINING BUILDING
F	EX. SBR TANKS NO. 6, 7, AND 8
G	EX. HEADWORKS BUILDING
H	EX. SBR TANKS NO. 4 AND 5
I	EX. SBR TANKS 1, 2, AND 3
J	EX. EQUALIZATION TANK
K	EX. ULTRAVIOLET LIGHT DISINFECTION FACILITY
L	EX. STORAGE TO BE CONVERTED TO ADMINISTRATION
M	EX. STORAGE GARAGE
N	EX. HOUSE

LEGEND:

- IP — STORM INLET PROTECTION
- PS — PERMANENT SEEDING
- SF — SILT FENCE
- CONSTRUCTION LIMITS/AREA OF DISTURBANCE LIMITS
- EB — EROSION CONTROL BLANKET
- FS — FILTER SOCK/TRAVERSABLE ROLLED EROSION CONTROL PRODUCT
- TD — TRAVERSABLE CHECK DAM
- RD — ROCK CHECK DAM

GENERAL NOTES:

1. CONTRACTOR SHALL PROVIDE ADDITIONAL EROSION CONTROL MEASURES AS SPECIFIED IN THE DETAILED SPECIFICATIONS, INCLUDING BUT NOT LIMITED TO CONCRETE WASHOUT STATIONS, TEMPORARY CONSTRUCTION ENTRANCES, TEMPORARY SEEDING, ETC. AS REQUIRED DURING THE DURATION OF THE PROJECT TO MAINTAIN COMPLIANCE WITH THE GENERAL STORM WATER CONSTRUCTION PERMIT, INCLUDING PROVIDING REQUIRED NOTIFICATIONS TO THE REQUIRED AGENCIES.
2. SEE SHEET EROSION CONTROL DETAIL SHEETS FOR SPECIFIC DETAILS AND REQUIREMENTS FOR EROSION CONTROL ELEMENTS.
3. CONTRACTOR MAY SUBSTITUTE FILTER SOCK/TRAVERSABLE ROLLED EROSION CONTROL PRODUCT FOR SILT FENCE.
4. CONTRACTOR SHALL TRACK UP AND DOWN STEEP SLOPES BEFORE IMPLEMENTING TEMPORARY SEEDING TO PROVIDE SOME COMPACTION TO SOILS.

For Public Viewing Only-Not For Downloading

COMMONWEALTH ENGINEERS, INC.
A wealth of resources to master a common goal.
https://commonwealthengineers.com/

RUDOLPH J. NOVITCH
REGISTERED
No. PE19400077
INDIANA PROFESSIONAL ENGINEER

Signature 10/03/2025 Date

TOWN OF NEWBURGH
WARRICK COUNTY, INDIANA

WASTEWATER TREATMENT
PLANT FLOW EQ BASIN

© 2025 BY COMMONWEALTH ENGINEERS, INC. ALL RIGHTS RESERVED. REPRODUCTION BY ANY METHOD, IN WHOLE OR IN PART WITHOUT PERMISSION IS PROHIBITED

Indiana 811 Know what's below. 811 before you dig 1-800-382-5544 (ITS THE LAW)

No.	Submittal / Revision	By	Date

Designed By:	Drawn By:	Checked By:
DOF	DMJ	ETP
Issue Date: 5/14/25	Project No: S18005-041	Scale: AS SHOWN

EROSION CONTROL PLAN II

Drawing No:

EC6

Sheet: 66 OF 161

File: Z:\SHARED\IN CLIENTS M-Z\NEWBURGH\S18005 ON CALL SEWER ENG SVC\5041 WWTP FLOW EQ BASIN\05 CADA CURRENT FILES\1 DRAWINGS\20 EROSION CONTROL PLAN.DWG
Saved: 9/29/2025 4:12:20 PM Plotted: 10/2/2025 2:10:04 PM Current User: Drew Jenkins LastSavedBy: djenkins

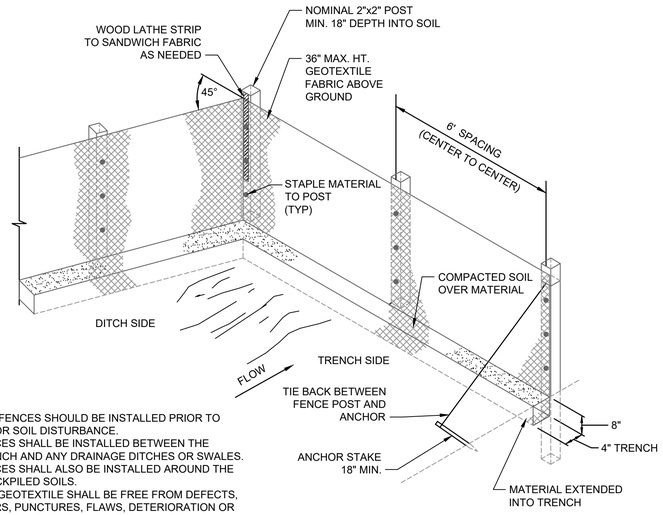

NOTES:

1. SILT FENCES SHOULD BE INSTALLED PRIOR TO MAJOR SOIL DISTURBANCE.
2. FENCES SHALL BE INSTALLED BETWEEN THE TRENCH AND ANY DRAINAGE DITCHES OR SWALES.
3. FENCES SHALL ALSO BE INSTALLED AROUND THE STOCKPILED SOILS.
4. THE GEOTEXTILE SHALL BE FREE FROM DEFECTS, TEARS, PUNCTURES, FLAWS, DETERIORATION OR DAMAGE INCURRED DURING MANUFACTURE, TRANSPORTATION, STORAGE, OR INSTALLATION.
5. TIE BACKS SHALL BE PLACED AS REQUIRED.

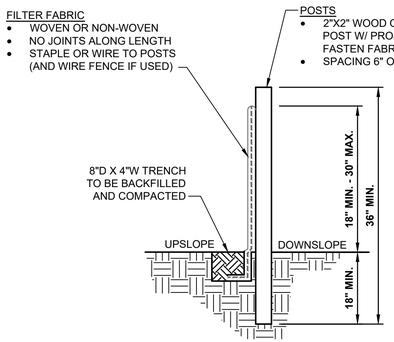

INSTALLATION:

1. THE BOTTOM 1' OF THE FENCE SHALL BE BURIED IN THE TRENCH ON THE UPSLOPE SIDE.
2. FENCE SHALL BE INSTALLED ALONG LEVEL GRADES, NOT ACROSS FLOW CHANNELS.
3. IF OPTIONAL SUPPORT WIRE FENCE IS USED, POST SPACING MAY BE EXTENDED TO 8' O.C.

MAINTENANCE:

1. INSPECT SILT FENCE PERIODICALLY (WEEKLY) AND AFTER EACH STORM EVENT.
2. IF FABRIC IS TORN OR DAMAGED OR IN ANY WAY BECOMES INEFFECTIVE, REPLACE THE AFFECTED PORTION IMMEDIATELY.
3. REMOVE DEPOSITED SEDIMENT WHEN IT REACHES HALF THE HEIGHT OF THE FENCE, OR IT IS CAUSING THE FABRIC TO BULGE.
4. TAKE CARE NOT TO UNDERMINE THE FENCE DURING SEDIMENT REMOVAL.
5. AFTER THE CONTRIBUTING AREA HAS BEEN STABILIZED, REMOVE THE FENCE AND REMAINING SEDIMENT, BRING THE DISTURBED AREA TO GRADE, AND STABILIZE.

SILT FENCE DETAIL

NO SCALE

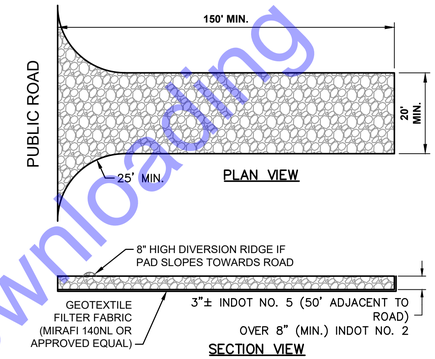

MAINTENANCE:

1. INSPECT DAILY AND AFTER EACH STORM EVENT OR HEAVY USE.
2. RESHAPE AS NEEDED FOR DRAINAGE AND RUNOFF CONTROL.
3. TOPDRESS WITH CLEAN STONE AS REQUIRED. MAINTAIN MINIMUM DEPTH THROUGHOUT CONSTRUCTION.
4. IMMEDIATELY REMOVE MUD AND SEDIMENT TRACKED OR WASHED ONTO PUBLIC ROADS BY SWEEPING OR BRUSHING. (DO NOT FLUSH AREA WITH WATER UNLESS WATER IS CONVEYED TO SEDIMENT TRAP.)
5. REPAIR ANY BROKEN PAVEMENT IMMEDIATELY.

STABILIZED CONSTRUCTION ENTRANCE DETAIL

NO SCALE

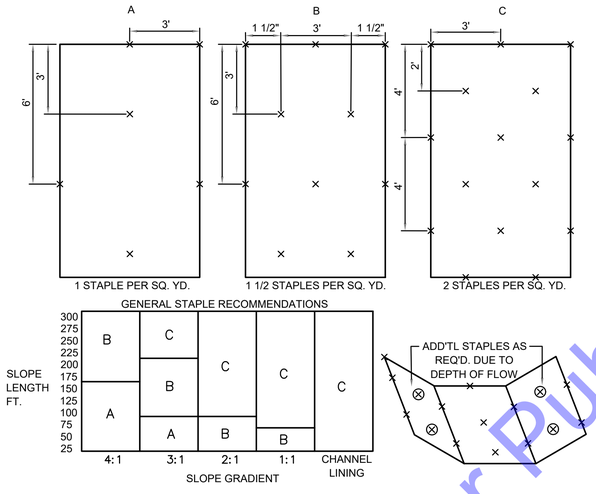

SPECIFICATIONS

EFFECTIVE LIFE

- THE FUNCTIONAL LIFE OF AN EROSION CONTROL BLANKET IS DEPENDENT ON THE MATERIALS USED.

ANCHORING

- STAPLES, PINS OR STAKES USED TO PREVENT MOVEMENT OR DISPLACEMENT OF BLANKET. (FOLLOW MANUFACTURER'S RECOMMENDATIONS FOR SPECIFIC APPLICATIONS.)

MATERIALS

- ORGANIC (STRAW, EXCELSIOR, WOVEN PAPER, COCONUT FIBER, ETC.) OR SYNTHETIC MULCH INCORPORATED WITH A POLYPROPYLENE, NATURAL FIBER OR SIMILAR NETTING MATERIAL. (THE NETTING MAY BE BIODEGRADABLE, PHOTODEGRADABLE OR PERMANENT.)

  NOTE: SOME EROSION CONTROL BLANKET NETTINGS MAY POSE A THREAT TO CERTAIN SPECIES OF WILDLIFE IF THEY BECOME ENTANGLED IN THE NETTING MATRIX.

- SIX TO 12-INCH STAPLES, PINS, OR STAKES.

INSTALLATION

1. SELECT THE TYPE AND WEIGHT OF EROSION CONTROL BLANKET TO FIT THE SITE CONDITIONS (E.G., SLOPE, CHANNEL, FLOW VELOCITY) PER THE MANUFACTURER'S RECOMMENDATIONS.
2. PREPARE THE SEEDBED, ADD SOIL AMENDMENTS, AND PERMANENTLY SEED THE AREA IMMEDIATELY FOLLOWING SEEDBED PREPARATION.
3. LAY EROSION CONTROL BLANKETS ON THE SEEDED AREA SO THAT THEY ARE IN CONTINUOUS CONTACT WITH THE SOIL WITH EACH UP-SLOPE OR UP-STREAM BLANKET OVERLAPPING THE DOWN-SLOPE OR DOWN-STREAM BLANKET BY AT LEAST EIGHT INCHES, OR FOLLOW MANUFACTURER'S RECOMMENDATIONS.
4. TUCK THE UPPERMOST EDGE OF THE UPPER BLANKETS INTO A CHECK SLOT (SLIT TRENCH), BACKFILL WITH SOIL AND TAMP DOWN. IN CERTAIN APPLICATIONS, THE MANUFACTURER MAY REQUIRE ADDITION CHECK SLOTS AT SPECIFIC LOCATIONS DOWN SLOPE FROM THE UPPERMOST EDGE OF THE UPPER BLANKETS.
5. ANCHOR THE BLANKETS IN PLACE BY DRIVING STAPLES, PINS, OR STAKES THROUGH THE BLANKET AND INTO THE UNDERLYING SOIL. FOLLOW AN ANCHORING PATTERN APPROPRIATE FOR THE SITE CONDITIONS AND AS RECOMMENDED BY THE MANUFACTURER.

MAINTENANCE

- INSPECT WITHIN 24 HOURS OF EACH RAIN EVENT AND AT LEAST ONCE EVERY SEVEN CALENDAR DAYS.
- CHECK FOR EROSION OR DISPLACEMENT OF THE BLANKET.
- IF ANY AREA SHOWS EROSION, PULL BACK THAT PORTION OF THE BLANKET COVERING THE ERODED AREA, ADD SOIL AND TAMP, RESEED THE AREA, REPLACE AND STAPLE THE BLANKET.

NOTES

CHANNEL LININGS UTILIZE STAPLE PATTERN "C" WITH ADDITIONAL STAPLES ON SIDE SLOPES AT PROJECTED WATER LINE.

STAPLE PATTERNS APPLY TO ALL NORTH AMERICAN GREEN EROSION CONTROL BLANKETS. STAPLE PATTERNS MAY VARY DEPENDING UPON SOIL TYPE AND AVERAGE RAINFALL.

AT SLOPE LENGTHS GREATER THAN 300 FEET OR WHERE DRAINAGE OVER LARGE AREAS IS DIRECTED ONTO THE BLANKETS, STAPLE PATTERN "C" SHOULD BE UTILIZED.

EROSION CONTROL BLANKET

NO SCALE

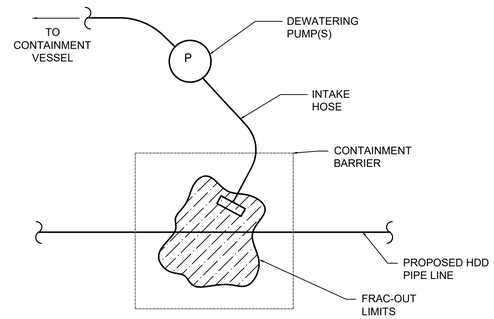

H.D.D. "FRAC-OUT" CONTINGENCY PLAN NOTES:

1. REFER TO SPECS. FOR HORIZONTAL DIRECTIONAL DRILLING REQUIREMENTS. THE ITEMS IDENTIFIED HEREIN ARE GENERAL IN NATURE. CONTRACTOR SHALL SUBMIT A PROJECT SPECIFIC "FRAC-OUT" CONTINGENCY PLAN FOR OWNER AND ENGINEER APPROVAL AS PART OF SHOP DRAWING SUBMITTALS.
2. AT LEAST ONE CONTAINMENT VESSEL MUST BE ON-SITE DURING ALL DRILLING OPERATIONS.
3. CONTRACTOR SHALL HAVE AT LEAST ONE FULL-TIME PERSON ON-SITE DURING DRILLING OPERATIONS TO WALK THE DRILLING ROUTE AND IDENTIFY FRAC-OUTS AND COORDINATE REMEDIATION.
4. MINIMIZE DRILLING PRESSURES TO KEEP MUD FROM FRACTURING OUT OF THE SOIL. IF A FRAC-OUT IS IDENTIFIED, STOP DRILLING IMMEDIATELY.
5. IMMEDIATELY FOLLOWING THE DETECTION OF AN INADVERTENT MUD RELEASE, CONTAINMENT AND CLEAN-UP OPERATIONS SHALL COMMENCE.
   5.1. FOR RELEASES ON LAND, CONTRACTOR SHALL USE SILT FENCING, SANDBAGS, AND/OR EARTH BERMS TO PREVENT FLUID FROM MIGRATING OR FLOWING FROM THE IMMEDIATE AREA OF THE DISCHARGE.
   5.2. FOR RELEASES TO OPEN WATER OR DRAINAGE WAYS, ISOLATE THE AREA USING A TURBIDITY BARRIER, CONTAINMENT BOX, OR STAKED SEDIMENT BARRIER.
6. CLEAN-UP SHALL COMMENCE IMMEDIATELY AFTER THE RELEASE IS CONTAINED. CLEAN-UP SHALL INCLUDE REMOVAL OF ALL VISIBLE DRILLING FLUID. REMOVAL METHODS MAY VARY BASED ON THE VOLUME OF THE RELEASE AND THE SITE-SPECIFIC CONDITIONS. REMOVAL EQUIPMENT MAY INCLUDE VACUUM TRUCK(S), LOADER AND TRACK HOE BUCKETS, SMALL PUMPS, SHOVELS, BUCKETS, ETC.

HORIZONTAL DIRECTIONAL DRILL "FRAC-OUT" CONTINGENCY PLAN

NO SCALE

For Public Viewing Only-Not For Download

COMMONWEALTH ENGINEERS, INC.
A wealth of resources to master a common goal.
https://commonwealthengineers.com/

RUDOLPH J. NOLTICH
REGISTERED
No. PE19400077
INDIANA
PROFESSIONAL ENGINEER

Signature 10/03/2025 Date

TOWN OF NEWBURGH
WARRICK COUNTY, INDIANA

WASTEWATER TREATMENT
PLANT FLOW EQ BASIN

© 2025 BY COMMONWEALTH ENGINEERS, INC.: ALL RIGHTS RESERVED. REPRODUCTION BY ANY METHOD, IN WHOLE OR IN PART WITHOUT PERMISSION IS PROHIBITED

Indiana 811 Know what's below. 811 before you dig. 1-800-382-5544 (ITS THE LAW)

No.	Submittal / Revision	By	Date

Designed By:	Drawn By:	Checked By:
DOF	DMJ	ETP
Issue Date: 10/03/25	Project No: S18005-041	Scale: AS SHOWN

EROSION CONTROL DETAILS I

Drawing No:

EC7

Sheet: 67 OF 161

File: Z:\SHARED\IN CLIENTS M-Z\NEWBURGH\S18005 ON CALL SEWER ENG SVC\2041 WWTP FLOW EQ BASIN\05 CADA CURRENT FILES\1 DRAWINGS\07 EC & MISC DETAILS - NEWBURGH EQ.DWG
Saved: 10/2/2025 12:02:04 PM Plotted: 10/2/2025 2:10:39 PM Current User: Drew Jenkins LastSavedBy: djenkins

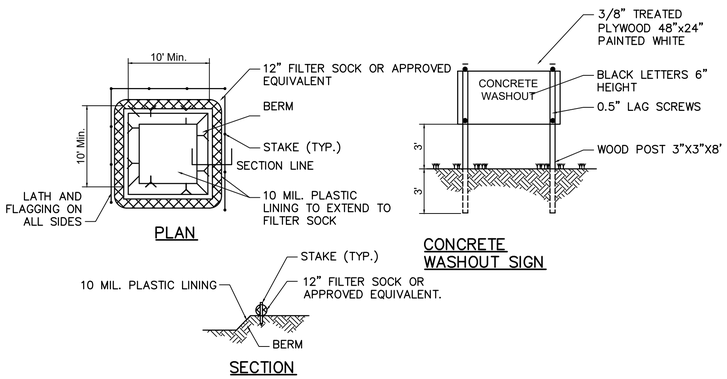

WASHOUT AREA NOTES:

1. CONCRETE WASHOUT AREA SHALL BE INSTALLED PRIOR TO ANY PLACEMENT ON SITE.
2. SIGNS SHALL BE PLACED AT THE CONSTRUCTION ENTRANCE AT THE WASHOUT AREA, AND ELSEWHERE AS NECESSARY TO CLEARLY INDICATE THE LOCATION OF THE CONCRETE WASHOUT AREA TO OPERATORS OF CONCRETE TRUCKS AND PUMP RIGS.
3. THE CONCRETE WASHOUT AREA SHALL BE REPAIRED AND ENLARGED OR CLEANED AS NECESSARY TO MAINTAIN CAPACITY FOR WASHOUT CONCRETE.
4. AT THE END OF CONSTRUCTION, ALL CONCRETE SHALL BE REMOVED FROM THE SITE AND DISPOSED OF AT AN APPROVED WASTE SITE.
5. WHEN CONCRETE WASHOUT AREA IS REMOVED, THE DISTURBED AREA SHALL BE SEEDED AND MULCHED OR OTHERWISE STABILIZED IN A MANNER APPROVED BY THE INSPECTOR.

CONCRETE WASHOUT AREA
NO SCALE

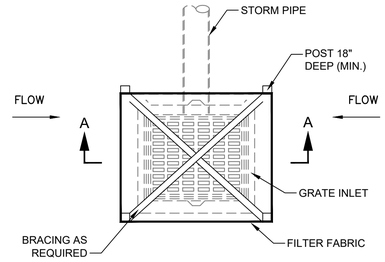

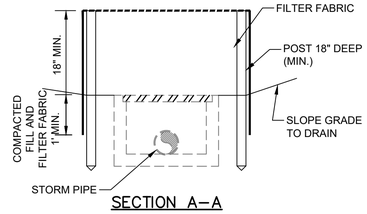

STORM INLET WITH SILT FENCE EROSION DETAIL
NO SCALE

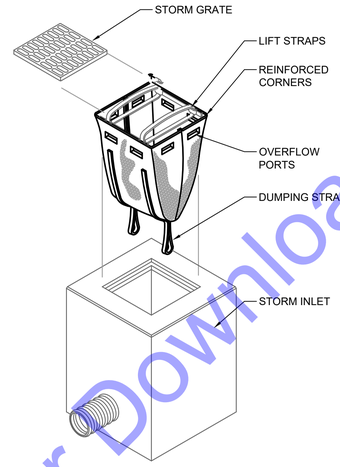

INSERT (BASKET) INLET PROTECTION DETAIL
NO SCALE

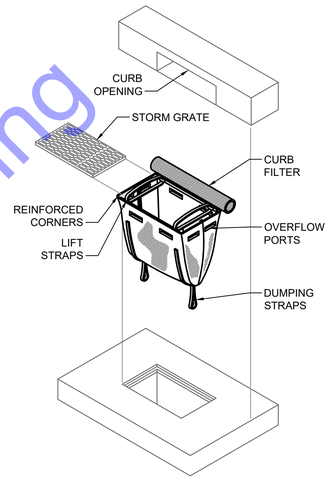

INSERT (BASKET) CURB INLET PROTECTION DETAIL
NO SCALE

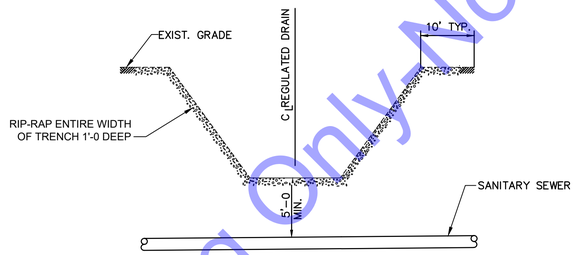

NOTES:

1. PROVIDE EROSION CONTROL MEASURES FOR ALL AREAS DISTURBED BY CONSTRUCTION.
2. ALL PIPE, FITTINGS, & RIP-RAP TO BE INCLUDED IN THE COST OF THE MAIN IN PLACE.
3. RIP-RAP ALL GRAVITY SEWER CROSSINGS.

TYPICAL DITCH AND CULVERT CROSSING DETAIL
NO SCALE

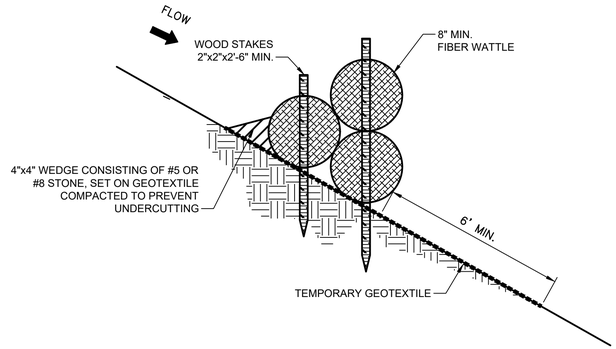

ROLLED EROSION CONTROL PRODUCT DETAIL
NO SCALE

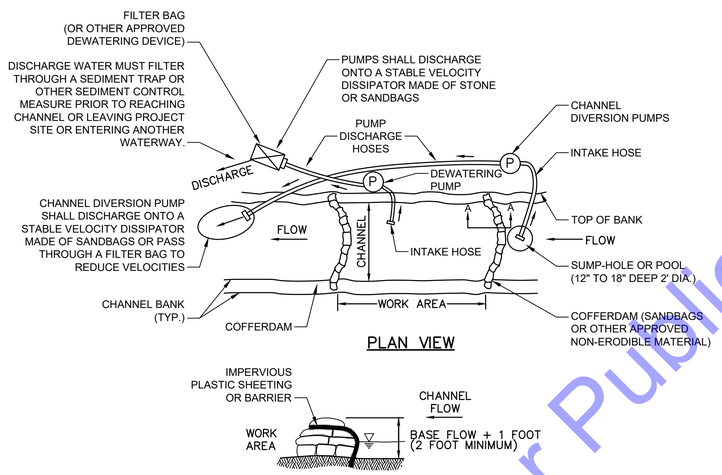

TEMPORARY IN-CHANNEL PUMP-AROUND DETAIL
NO SCALE

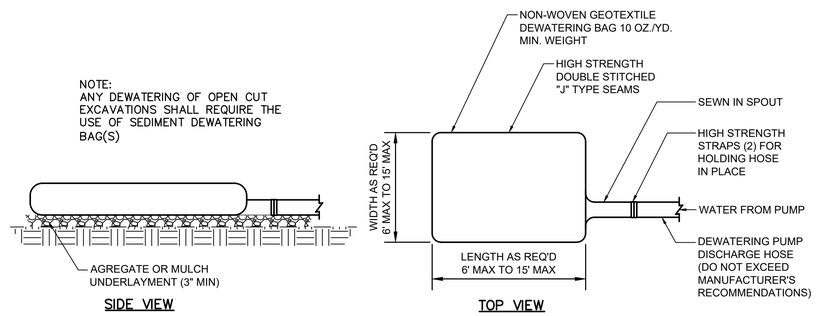

SEDIMENT DEWATERING BAG DETAIL
NO SCALE

For Public Viewing Only-Not For Download

COMMONWEALTH ENGINEERS, INC.
A wealth of resources to master a common goal.
https://commonwealthengineers.com/

RUDOLPH J. NOVITCH
REGISTERED
No. PE19400077
INDIANA PROFESSIONAL ENGINEER
Signature 10/03/2025 Date

TOWN OF NEWBURGH
WARRICK COUNTY, INDIANA

WASTEWATER TREATMENT
PLANT FLOW EQ BASIN

© 2025 BY COMMONWEALTH ENGINEERS, INC. ALL RIGHTS RESERVED. REPRODUCTION BY ANY METHOD, IN WHOLE OR IN PART WITHOUT PERMISSION IS PROHIBITED

Indiana 811 Know what's below. 811 before you dig. 1-800-382-5544 (ITS THE LAW)

No.	Submittal / Revision	By	Date

Designed By:	Drawn By:	Checked By:
DOF	DMJ	ETP
Issue Date: 10/03/25	Project No: S18005-041	Scale: AS SHOWN

EROSION CONTROL DETAILS II

Drawing No: **EC8**

Sheet: 68 OF 161

File: Z:\SHARED\IN CLIENTS M-Z\NEWBURGH\S18005 ON CALL SEWER ENG SVCS\041 WWTP FLOW EQ BASIN\06 CAD\A CURRENT FILES\1 DRAWINGS\07 EC & MISC DETAILS - NEWBURGH EQ.DWG
Saved: 10/2/2025 12:02:04 PM Plotted: 10/2/2025 2:10:33 PM Current User: Drew Jenkins LastSavedBy: djenkins

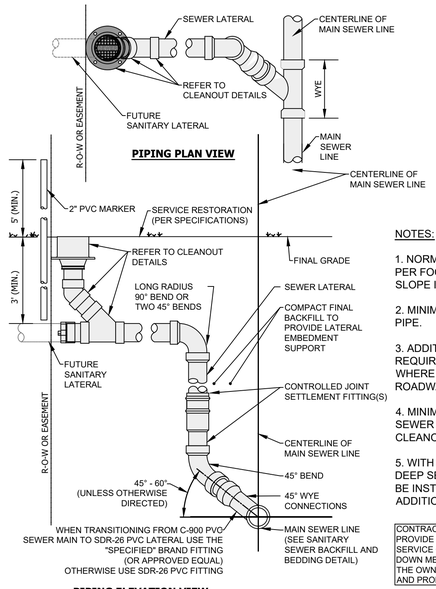

PIPING PLAN VIEW

PIPING ELEVATION VIEW

NOTES:

1. NORMAL LATERAL SLOPE IS 1/4" PER FOOT, MINIMUM LATERAL SLOPE IS 1/8" PER FOOT.
2. MINIMUM COVER IS 3 FEET OVER PIPE.
3. ADDITIONAL CLEANOUT REQUIRED AT RIGHT-OF-WAY WHERE LATERAL CROSSES ROADWAY.
4. MINIMUM LATERAL SIZE FROM SEWER MAIN TO PROPERTY LINE CLEANOUT IS 6".
5. WITH SEWER UTILITY APPROVAL, DEEP SEWER SLANT STACK MAY BE INSTALLED; MAY REQUIRE ADDITIONAL EASEMENT.

CONTRACTOR SHALL PROVIDE "AS-BUILT" SERVICE CONNECTION TIE DOWN MEASUREMENTS TO THE OWNER, ENGINEER, AND PROPERTY OWNER.

DEEP SANITARY SERVICE CONNECTION
NO TO SCALE

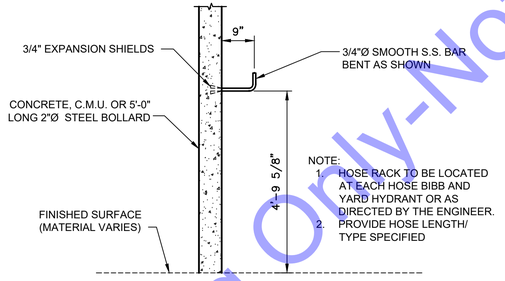

NOTE:
1. HOSE RACK TO BE LOCATED AT EACH HOSE BIBB AND YARD HYDRANT OR AS DIRECTED BY THE ENGINEER.
2. PROVIDE HOSE LENGTH/ TYPE SPECIFIED

HOSE RACK DETAIL
NO SCALE

NOTE:
UNLESS OTHERWISE NOTED, CHAMFER SHALL BE PROVIDED ON ALL EXPOSED EDGES OF NEW CONCRETE. CHAMFER ON EXTERIOR VERTICAL EDGES SHALL EXTEND A MINIMUM OF SIX (6) INCHES BELOW FINISHED GRADE.

CONCRETE WALL CHAMFER DETAIL
NO SCALE

CAUTION SIGN DETAIL
NO SCALE

NOTES:

1. SIGNS SHALL BE PLACED AT ALL HOSE BIBBS, YARD HYDRANTS, AND HYDRANT LOCATIONS AS SHOWN ON THE PLANS.
2. SIGNS SHALL BE MINIMUM 14" WIDE x 10" HIGH AND MEET OSHA REQUIREMENTS.

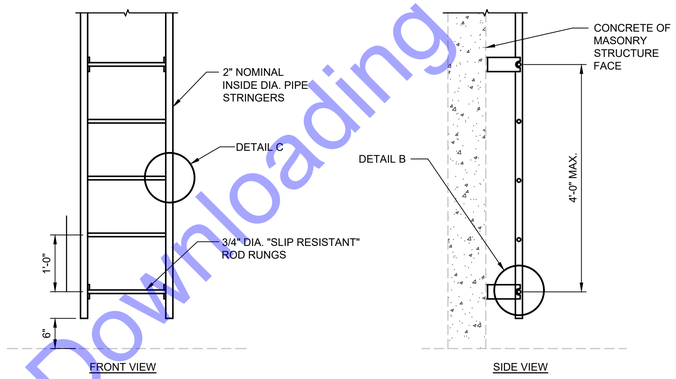

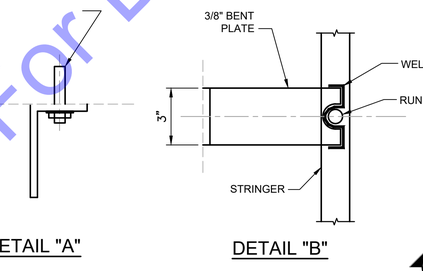

DETAIL "A"

DETAIL "B"

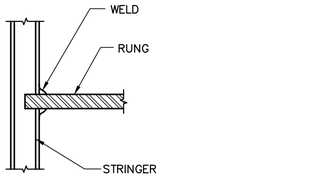

DETAIL "C"

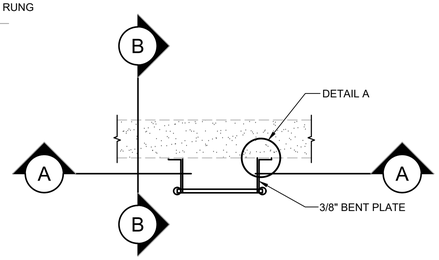

PLAN VIEW

LADDER DETAILS
NO SCALE

NOTES:

1. MATERIAL SHALL BE ALUMINUM UNLESS NOTED OTHERWISE.
2. SAFETY CLIMB DEVICE SHALL BE PROVIDED.

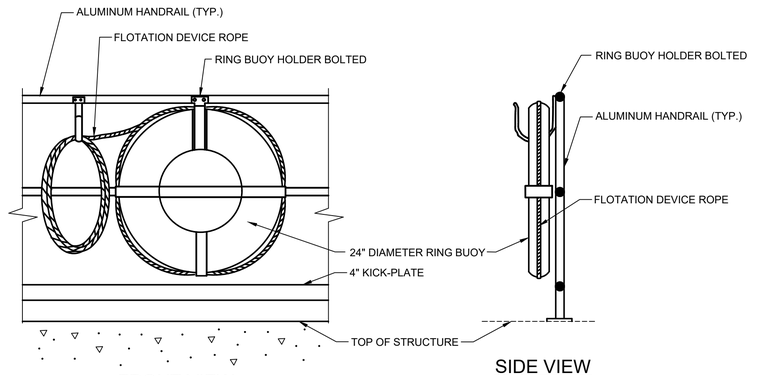

FRONT VIEW

SIDE VIEW

SAFETY FLOTATION DEVICE DETAILS
NO SCALE

For Public Viewing Only
Digitally-Not For Downloading

COMMONWEALTH ENGINEERS, INC.
A wealth of resources to master a common goal.
https://commonwealthengineers.com/

RUDOLPH J. NOVITCH
REGISTERED
No. PE19400077
INDIANA PROFESSIONAL ENGINEER

Signature 10/03/2025 Date

TOWN OF NEWBURGH
WARRICK COUNTY, INDIANA

WASTEWATER TREATMENT
PLANT FLOW EQ BASIN

© 2025 BY COMMONWEALTH ENGINEERS, INC. ALL RIGHTS RESERVED. REPRODUCTION BY ANY METHOD WHOLE OR IN PART WITHOUT PERMISSION IS PROHIBITED

Know what's below. 811 before you dig.
1-800-382-5544
(IT'S THE LAW)

No.	Submittal / Revision	By	Date

Designed By:	Drawn By:	Checked By:
DOF	DMJ	ETP
Issue Date:	Project No:	Scale:
10/03/25	S18005-041	AS SHOWN

MISCELLANEOUS DETAILS I

Drawing No:
MD01
Sheet: 69 OF 161

File: Z:\SHARED\IN CLIENTS M-Z\NEWBURGH\S18005 ON CALL SEWER ENG SVCS\041 WWTP FLOW EQ BASIN\06 CADA CURRENT FILES\1 DRAWINGS\07-EC & MISC DETAILS - NEWBURGH EQ.DWG
Saved: 10/2/2025 12:02:04 PM Plotted: 10/2/2025 2:10:36 PM Current User: Drew Jenkins LastSavedBy: djenkins

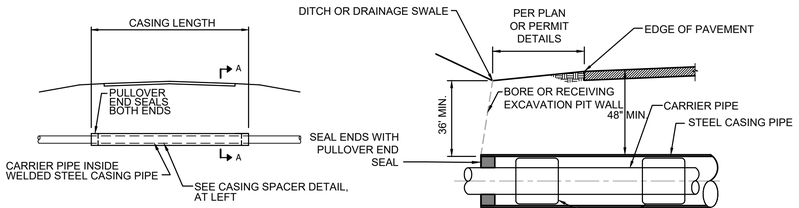

CROSSING DETAIL

DETAIL "A"

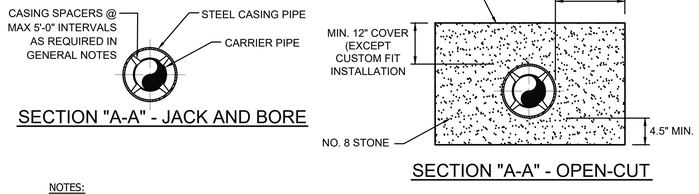

SECTION "A-A" - JACK AND BORE

SECTION "A-A" - OPEN-CUT

NOTES:

1. SHEET AS REQUIRED FOR PUSH PIT AND RECEIVING PIT WHERE SOIL CONDITIONS WILL NOT ALLOW A SAFE WORKABLE PIT. ANY PORTION OF PIT NOT SHEETED MUST BE SLOPED FOR SAFETY OF MEN AND EQUIPMENT. PIT CONSTRUCTION SHALL COMPLY WITH ALL PROVISIONS, REQUIREMENTS AND LATEST REVISIONS OF FEDERAL AND STATE REGULATIONS.
2. ALL MATERIAL USED FOR SHEETING, WHALERS AND STRUTS MUST BE OF ADEQUATE SIZE TO SAFELY WITHSTAND EARTH PRESSURES. FOR DEEP PITS, STEEL SHEETING IS ADVISABLE.
3. PROVIDE SUMP AND WELL POINTS AS NECESSARY TO MAINTAIN DRY, SAFE PITS.
4. SPACERS SHALL NOT ALLOW CARRIER PIPE TO "FLOAT" IN INTERIOR OF CASING PIPE. SPACERS SHALL BE INSTALLED WITHIN ONE (1) FT. OF BOTH SIDES OF THE CARRIER PIPE JOINT, WITHIN TWO (2) FT. OF THE END OF STEEL CASING, AND MAXIMUM SPACING DISTANCE OF FIVE (5) FT.

OPEN-CUT CASING DETAIL
NOT TO SCALE

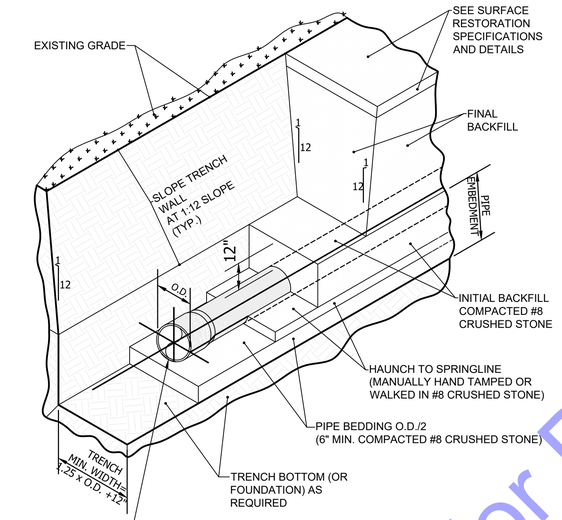

NOTES:

1. OSHA TRENCH SAFETY REQUIREMENTS SHALL BE FOLLOWED WITH ALL TRENCH EXCAVATION.
2. INITIAL BACKFILL: #5 OR #8 CRUSHED STONE MANUALLY COMPACTED
3. FINAL BACKFILL: SUITABLE EXCAVATED MATERIAL MAY BE USED, COMPACTED AS SPECIFIED.
4. ALL SUITABLE EXCAVATED MATERIAL SHALL BE FREE OF ROCKS OR MORE THAN TWO INCHES IN DIAMETER, CONCRETE, ROOTS, STUMPS, TRASH, FROZEN MATERIALS, OR OTHER SIMILAR MATERIAL.

NON-RIGID SANITARY SEWER PIPE BEDDING & BACKFILL IN AREAS NOT SUBJECT TO TRAFFIC
NOT TO SCALE

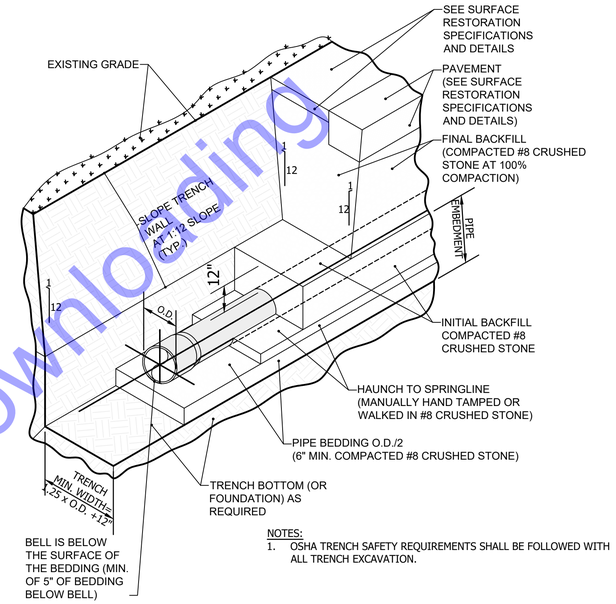

NOTES:

1. OSHA TRENCH SAFETY REQUIREMENTS SHALL BE FOLLOWED WITH ALL TRENCH EXCAVATION.

NON-RIGID SANITARY SEWER PIPE BEDDING & BACKFILL IN AREAS SUBJECT TO TRAFFIC
NOT TO SCALE

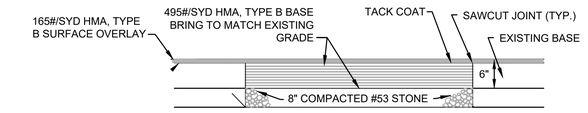

ASPHALT LIFT STATION DRIVE DETAIL
NOT TO SCALE

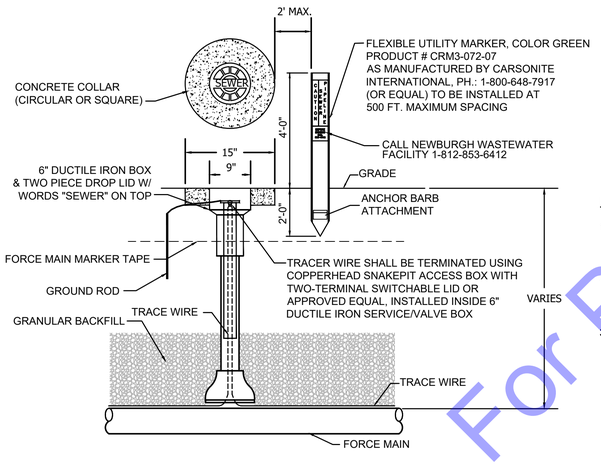

NOTES:

1. MARKERS & RISERS SHALL BE INSTALLED AT LIFT STATIONS AND DISCHARGED AT MANHOLE LOCATIONS. MARKERS & RISERS SHALL BE INSTALLED ALONG THE FORCE MAIN ROUTE AT 500' INTERVALS FOR FORCE MAIN OVER 500' IN LENGTH.
2. GROUND ROD SHALL BE CONNECTED TO SECOND TERMINAL ON TWO-TERMINAL SWITCHABLE LID WITH 12-AWG WIRE AND INSTALLED IN ACCORDANCE WITH MANUFACTURES RECOMMENDATIONS.
3. TRACER WIRE SHALL BE No. 12 AWG COPPER CLAD STEEL WIRE BY COPPERHEAD INDUSTRIES OR APPROVED EQUAL ALL UNDER GROUND SPLICES IN TRACER WIRE SHALL BE MADE WITH DRYCONN DIRECT BURY LUG BY COPPERHEAD INDUSTRIES OR APPROVED EQUAL

FORCE MAIN TRACING STATION DETAIL
NOT TO SCALE

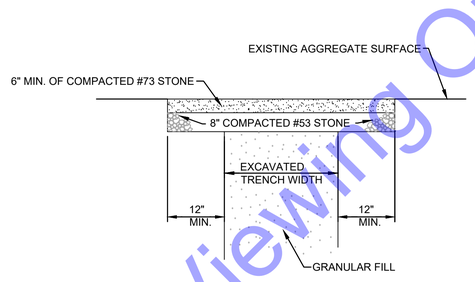

AGGREGATE DRIVE REPLACEMENT
NOT TO SCALE

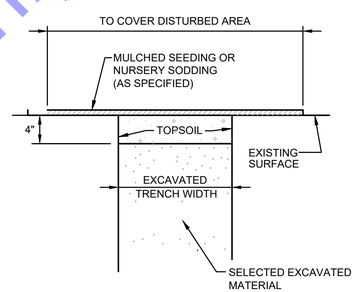

SURFACE RESTORATION DETAIL FOR GRASS AREAS
NOT TO SCALE

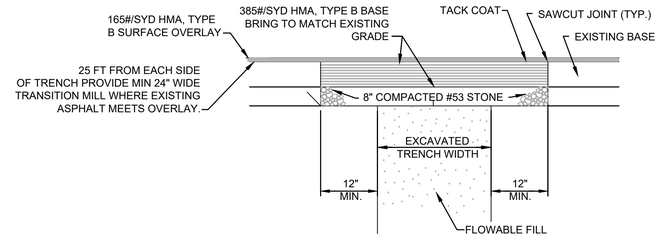

SURFACE RESTORATION DETAIL FOR ASPHALT PAVEMENT - WITH COMPLETE OVERLAY (FOR VANADA ROAD)
NOT TO SCALE

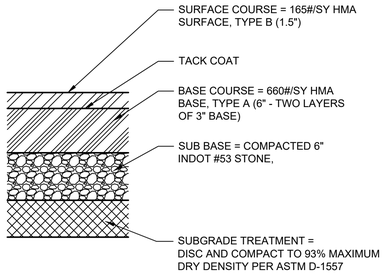

HEAVY DUTY ASPHALT PAVING DETAIL
NO SCALE

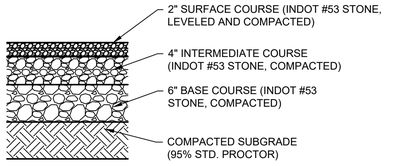

STONE ACCESS AREA DETAIL
NO SCALE

For Public Viewing Only
Not For Downloading

COMMONWEALTH ENGINEERS, INC.
A wealth of resources to master a common goal.
https://commonwealthengineers.com/
RUDOLPH J. NOTTOLI REGISTERED INDIANA PROFESSIONAL ENGINEER
No. PE19400077
Signature
10/03/2025
Date

TOWN OF NEWBURGH
WARRICK COUNTY, INDIANA

WASTEWATER TREATMENT PLANT FLOW EQ BASIN

© 2025 BY COMMONWEALTH ENGINEERS, INC. ALL RIGHTS RESERVED. REPRODUCTION IN ANY MEDIUM, WHOLE OR IN PART WITHOUT PERMISSION IS PROHIBITED

Know what's below. 811 before you dig.
1-800-382-5544
(IT'S THE LAW)

No.	Submittal / Revision	By	Date

Designed By:	Drawn By:	Checked By:
DOF	DMJ	ETP
Issue Date:	Project No:	Scale:
10/03/25	S18005-041	AS SHOWN

MISCELLANEOUS DETAILS II

Drawing No:
MD02
Sheet: 70 OF 161

File: Z:\SHARED\IN CLIENTS M-Z\NEWBURGH\S18005 ON CALL SEWER ENG SVCS\041 WWTP FLOW EQ BASIN\06 CADA CURRENT FILES\1 DRAWINGS\07-EC & MISC DETAILS - NEWBURGH EQ.DWG
Saved: 10/2/2025 12:22:04 PM Plotted: 10/2/2025 2:10:40 PM Current User: Drew Jenkins LastSavedBy: djenkins

Model 923 Slide Gate

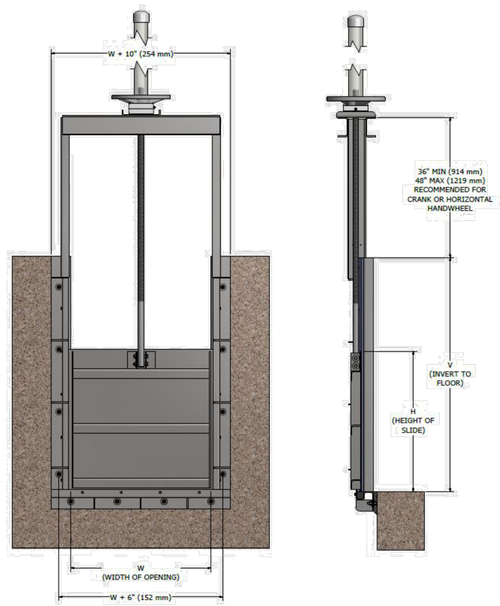

GATE ILLUSTRATED: 36" (W) x 36" (H) x 60" (V)
SEE ACTUATORS SECTION FOR OTHER ARRANGEMENTS

Model 923 Features

*UHMW SEAT/SEALS
*LEAKAGE 1/2 OF AWWA C-561
*WALL MOUNTED SIDE FRAMES
*OPEN CHANNEL - NO TOP SEAL
*YOKE MOUNTED ACTUATORS
*RESILIENT INVERT SEAL (FLUSH BOTTOM CLOSURE)

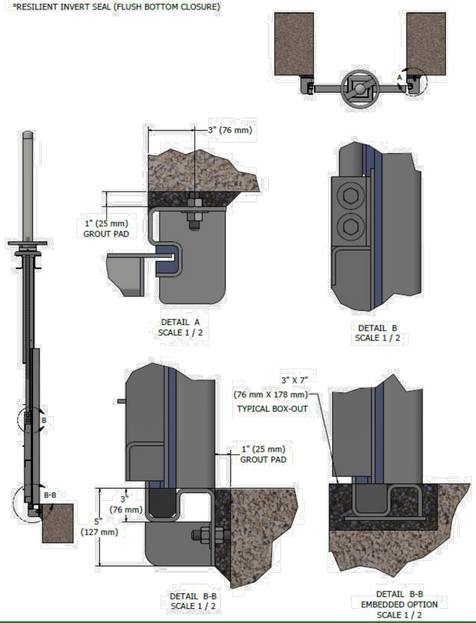

Model 924 Sluice Gate

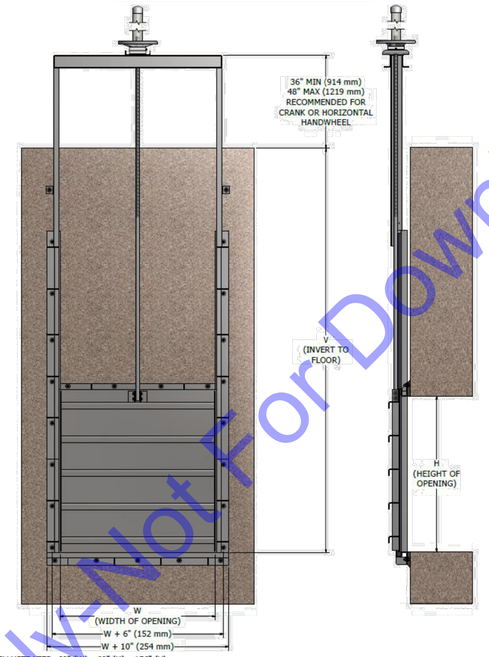

GATE ILLUSTRATED: 60" (W) x 60" (H) x 156" (V)
SEE ACTUATORS SECTION FOR OTHER ARRANGEMENTS

Model 924 Features

*UHMW SEAT/SEALS
*LEAKAGE 1/2 OF AWWA C-561
*WALL MOUNTED SIDE FRAMES
*FULL APERTURE SEALING
*YOKE MOUNTED ACTUATORS
*RESILIENT INVERT SEAL (FLUSH BOTTOM CLOSURE)

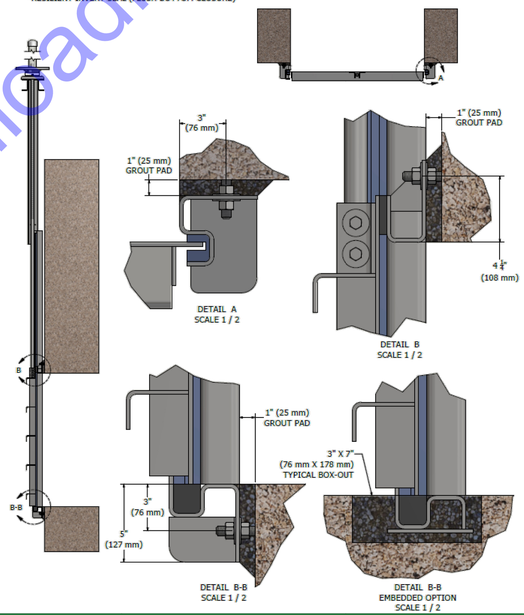

Model 955 Sluice Gate

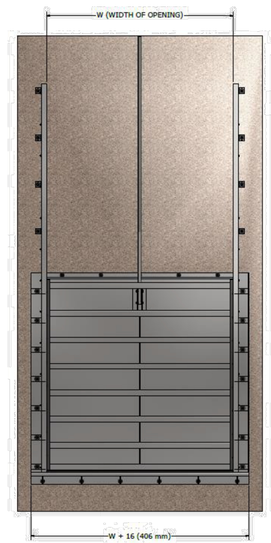

GATE ILLUSTRATED: 96" (W) x 96" (H)
SEE ACTUATORS SECTION FOR OTHER ARRANGEMENTS

Model 955 Features

*UHMW SEAT/SEALS
*LEAKAGE 1/2 OF AWWA C-561
*WALL MOUNTED SIDE FRAMES
*FULL APERTURE SEALING
*PEDESTAL, WALL BRACKET OR FLOOR BOX MOUNTED ACTUATORS
*RESILIENT INVERT SEAL (FLUSH BOTTOM CLOSURE)

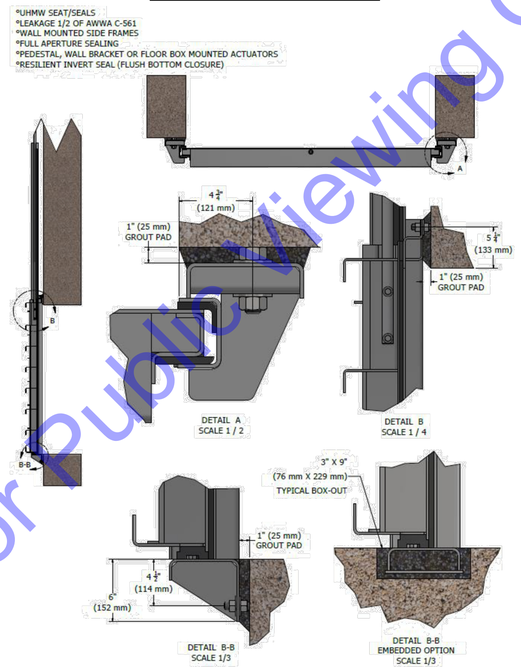

Actuators: Non-Self Contained Gates

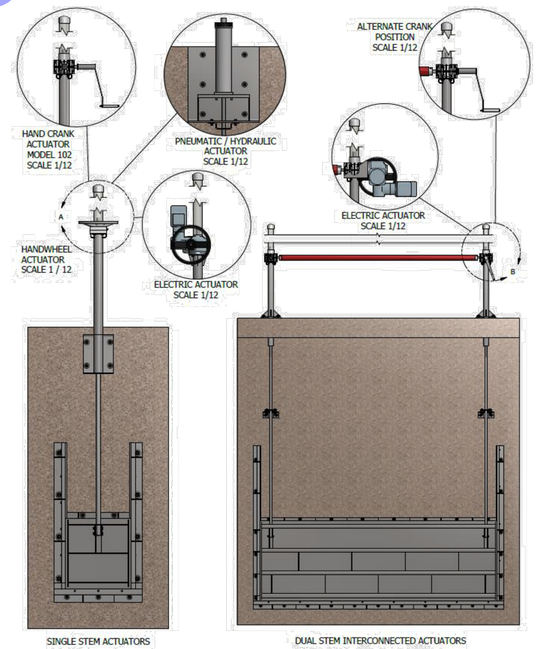

GENERAL NOTES

1. REFER TO GATE SCHEDULE (SHEET MD-11) FOR SPECIFICS ON SIZING, ACTUATORS, AND OTHER DETAILS OF SPECIFIC PLACEMENT.

For Public Viewing Only-Not For Downloading

COMMONWEALTH ENGINEERS, INC.
A wealth of resources to master a common goal.
https://commonwealthengineers.com/

RUDOLPH J. NOLTICH
REGISTERED
No. PE19400077
INDIANA
PROFESSIONAL ENGINEER
Signature 10/03/2025 Date

TOWN OF NEWBURGH
WARRICK COUNTY, INDIANA

WASTEWATER TREATMENT
PLANT FLOW EQ BASIN

© 2025 BY COMMONWEALTH ENGINEERS, INC. ALL RIGHTS RESERVED. REPRODUCTION BY ANY METHOD, IN WHOLE OR IN PART WITHOUT PERMISSION IS PROHIBITED

Indiana 811 Know what's below. 811 before you dig. 1-800-382-5544 (ITS THE LAW)

No.	Submittal / Revision	By	Date

Designed By:	Drawn By:	Checked By:
DOF	DMJ	ETP
Issue Date:	Project No:	Scale:
10/03/25	S18005-041	AS SHOWN

MISCELLANEOUS DETAILS III

Drawing No:
MD03
Sheet: 71 OF 161

File: Z:\SHARED\IN CLIENTS M-Z\NEWBURGH\S18005 ON CALL SEWER ENG SVCS\041 WWTP FLOW EQ BASIN\06 CADA CURRENT FILES\1 DRAWINGS\07-EC & MISC DETAILS - NEWBURGH EQ.DWG
Saved: 10/2/2025 12:02:04 PM Plotted: 10/2/2025 2:10:47 PM Current User: Drew Jenkins LastSavedBy: djenkins

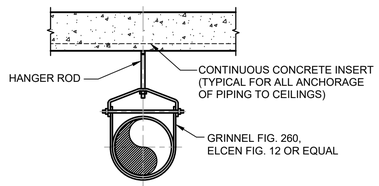

NOTE:

PROVIDE HANGER RODS IN ACCORDANCE WITH THE SPECIFICATIONS. INSTALLATION OF PIPE HANGER SHALL BE IN ACCORDANCE WITH MANUFACTURERS RECOMMENDATIONS.

ADJUSTABLE CLEVIS PIPE HANGER DETAIL
NO SCALE

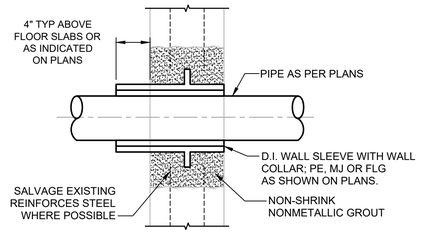

SLEEVE OPENING AT EXISTING WALLS & SLABS FOR 3"Ø OR SMALLER PIPES ABOVE GRADE
NO SCALE

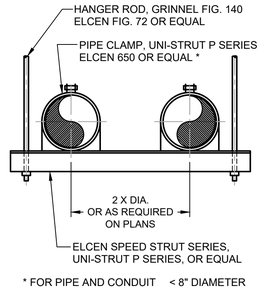

* FOR PIPE AND CONDUIT < 8" DIAMETER

TRAPEZE TYPE PIPE HANGER DETAIL
NO SCALE

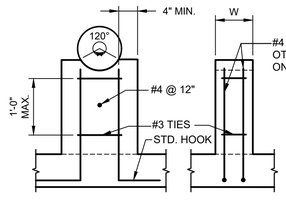

W = 8" FOR PIPE UP TO AND INCLUDING 12" PIPE. 1'-0" FOR PIPE OVER 12"

TYPICAL REINFORCED CONCRETE PIPE SUPPORT
NO SCALE

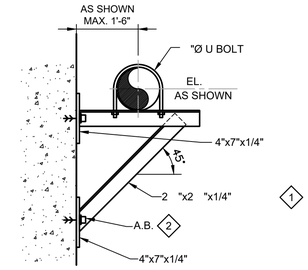

WALL BRACKET PIPE SUPPORT FOR PIPING UNDER 12" DIAMETER
NO SCALE

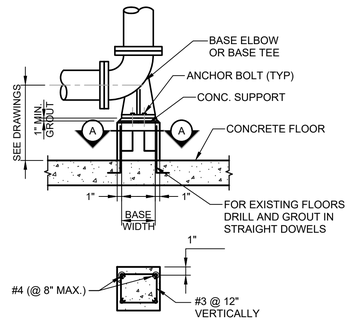

SECTION A

TYPICAL CONCRETE PIPE SUPPORT DETAIL
NO SCALE

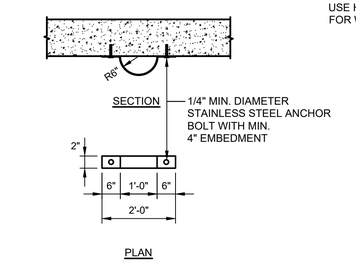

STAINLESS STEEL GUIDE BAND
NO SCALE

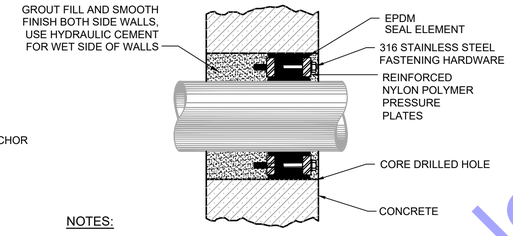

NOTES:

1. ELECTROMETRIC ELEMENT AND LINK-SEAL APPARATUS REQUIRED COMPATIBLE FOR HIGH TEMPERATURE APPLICATIONS - FOR ALL LINES

2. ALL WALL PENETRATIONS (EXISTING WALLS) CONVEYING PIPE SHALL UTILIZE A LINK-SEAL EQUIVALENT, SHALL BE GROUTED SMOOTH, AND SHALL HAVE A BONDING AGENT APPLIED.

LINK-SEAL WITH CORE DRILLED HOLE DETAIL
NO SCALE

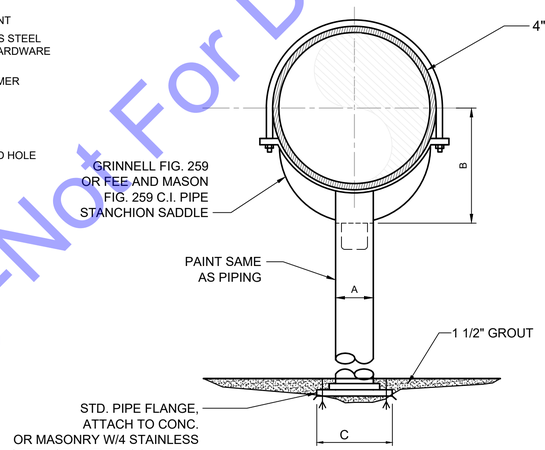

NOTES:

1. PROVIDE HALF ROUND RIGID INSULATION AND INSULATION PROTECTION SHIELD, SIMILAR TO GRINNELL FIG. 167 OR ELCEN FIG. 219, WHERE PIPING IS INSULATED

2. PROVIDE NEOPRENE WAFFLE INSULATION PAD, SIMILAR TO MASON TYPE "W" OR KORKFUND KORPAD 40 UNDER SUPPORT FOOT WHEN PIPING IS ISOLATED OR SUPPORT IS ADJACENT TO MECHANICAL EQUIPMENT.

3. FOR BASE HEIGHT AND FLANGE DIMENSIONS, SEE TABLE

4. DETAIL IS FOR GENERAL REFERENCING PURPOSES. THE CONTRACTOR IS RESPONSIBLE FOR COORDINATING AND DESIGN OF ALL PIPE SUPPORTS - BEING A DELEGATED DESIGN - WITH THE STRUCTURAL DOCUMENTS, WHICH MAY INCLUDE ADDITIONAL CONSTRAINTS ON WHERE PIPE SUPPORTS CAN BE LOCATED WITHIN A STRUCTURE.

PIPE SUPPORT AND TABLE DETAIL
NO SCALE

DIMENSION TABLE			
PIPE SIZE	A	B	C
4"	3"	4-3/16"	9"
5"	3"	4-13/16"	9"
6"	3"	5-7/16"	9"
8"	3"	6-15/16"	9"
10"	3"	8-7/16"	9"
12"	3"	9-15/16"	9"
14"	4"	10-15/16"	11"
16"	4"	12-3/8"	11"
18"	4"	13-7/8"	11"
20"	6"	15-3/8"	13-1/2"
22"	6"	16-5/8"	13-1/2"
24"	6"	17-15/16"	13-1/2"
26"	6"	19-1/8"	13-1/2"
30"	6"	21-5/16"	13-1/2"
32"	6"	22-1/2"	13-1/2"
36"	8"	24-1/2"	16"

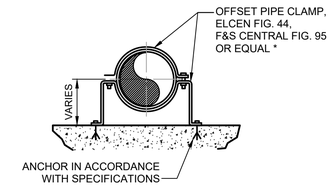

* FOR PIPE AND CONDUIT < 8" DIAMETER

OFFSET TYPE PIPE CLAMP DETAIL
NO SCALE

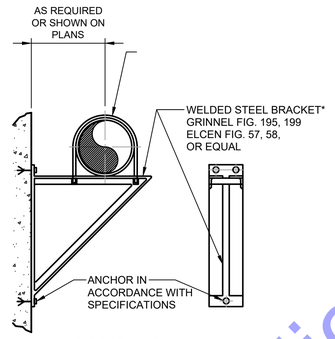

* FOR PIPE 12"Ø TO 24"Ø

BRACKET TYPE PIPE SUPPORT
NO SCALE

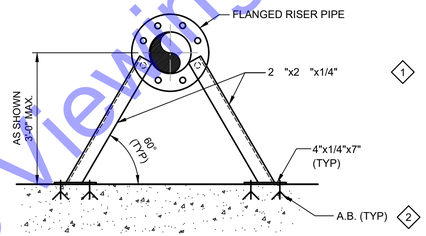

RISER STABILIZER BRACKET FOR VERTICAL, FLANGED PIPING
NO SCALE

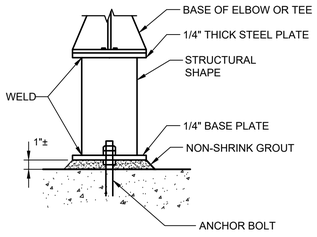

TYPICAL BASE PLATE SETTING
NO SCALE

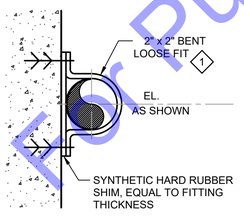

CLAMP TYPE SUPPORT FOR PIPING UNDER 4" DIA.
NO SCALE

GENERAL NOTES FOR FABRICATIONS THIS SHEET

1. MISCELLANEOUS FABRICATIONS SHALL BE WELDED CONSTRUCTION, STEEL OR ALUMINUM, " THICK, UNLESS NOTED OTHERWISE, WITH CONTINUOUS ALL AROUND " THICK WELDED CONNECTIONS STEEL SHALL BE HOT DIPPED GALVANIZED AFTER FABRICATION. ALUMINUM SHALL BE BITUMINOUS COATED ON SURFACES IN CONTACT WITH CONCRETE OR MASONRY.

2. ANCHOR BOLTS SHALL BE HILTI, WEJ-IT OR EQUAL, ANSI 316 STAINLESS STEEL INCLUDING NUTS & WASHERS. ANCHOR BOLTS SHALL "Ø WITH 4" EMBEDMENT IN CONCRETE, UNLESS NOTED OTHERWISE.

For Public Viewing Only-Not For Downloading

COMMONWEALTH ENGINEERS, INC.
A wealth of resources to master a common goal.
https://commonwealthengineers.com/
RUDOLPH J. NOLTICH IV REGISTERED No. PE19400077 INDIANA PROFESSIONAL ENGINEER
Signature 10/03/2025 Date

TOWN OF NEWBURGH
WARRICK COUNTY, INDIANA

WASTEWATER TREATMENT
PLANT FLOW EQ BASIN

© 2025 BY COMMONWEALTH ENGINEERS, INC. ALL RIGHTS RESERVED. REPRODUCTION BY ANY METHOD, IN WHOLE OR IN PART WITHOUT PERMISSION IS PROHIBITED

Indiana 811 Know what's below. 811 before you dig. 1-800-382-5544 (ITS THE LAW)

No.	Submittal / Revision	By	Date

Designed By:	Drawn By:	Checked By:
DOF	DMJ	ETP
Issue Date: 10/03/25	Project No: S18005-041	Scale: AS SHOWN

MISCELLANEOUS DETAILS IV

Drawing No: **MD04**

Sheet: 72 OF 161

File: Z:\SHARED\IN CLIENTS M-Z\NEWBURGH\S18005 ON CALL SEWER ENG SVCS\041 WWTP FLOW EQ BASIN\06 CADD\A CURRENT FILES\1 DRAWINGS\07-EC & MISC DETAILS - NEWBURGH EQ.DWG
Saved: 10/2/2025 12:22:04 PM Plotted: 10/2/2025 2:10:50 PM Current User: Drew Jenkins LastSavedBy: djenkins

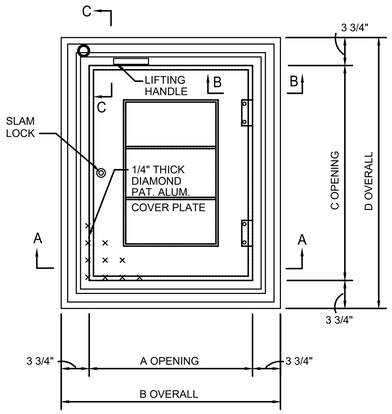

PLAN

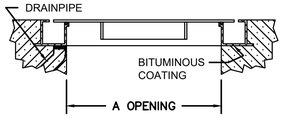

SECTION A-A

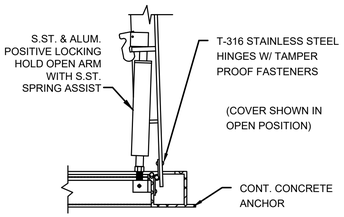

SECTION B-B

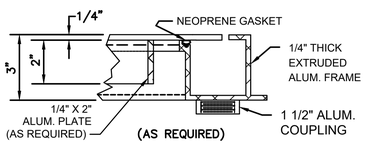

SECTION C-C

SINGLE LEAF ACCESS-HATCH
NO SCALE

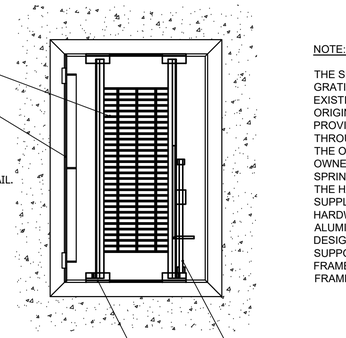

NOTES:
DETAIL REFERENCES "HALLIDAY SERIES X RETRO-GRATING" DETAIL. CONTRACTOR SHALL THIS PRODUCT OR APPROVED EQUAL WITH ENGINEER APPROVAL.

NOTE:

THE SERIES X RETRO-GRATE IS A HINGED ALUMINUM GRATING PANEL THAT IS EASILY INSTALLED BENEATH EXISTING ACCESS COVERS REGARDLESS OF THE ORIGINAL COVER MANUFACTURER. THE RETRO-GRATE PROVIDES ADDITIONAL PROTECTION AGAINST FALL THROUGH ACCIDENTS WHEN THE COVER IS LEFT IN THE OPEN POSITION. THE UNIT IS LOCKABLE BY AN OWNER SUPPLIED PADLOCK AND INCORPORATES A SPRING ASSISTED LIFTING HANDLE THAT POSITIONS THE HANDLE NEAR THE SLAB LEVEL. THE UNIT IS SUPPLIED WITH T-316 STAINLESS STEEL MOUNTING HARDWARE AND AN AUTOMATIC HOLD OPEN ARM WITH ALUMINUM RELEASE LATCH. THE RETRO-GRATE IS DESIGNED TO BE INSTALLED BY MOUNTING THE SUPPORT BRACKETS TO EITHER THE EXISTING FRAMEWORK OR TO THE CONCRETE SLAB BELOW THE FRAMEWORK.

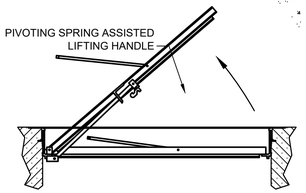

ACCESS HATCH "FALL PROTECTION GRATING" DETAIL
NO SCALE

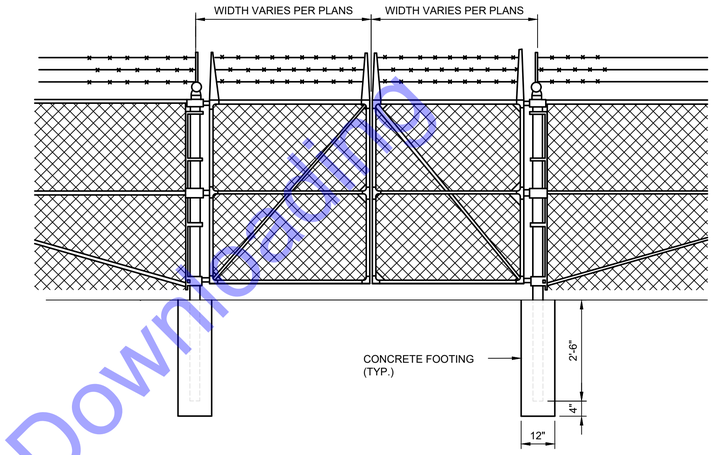

CHAIN LINK FENCE - SWINGING GATE DETAIL
NO SCALE

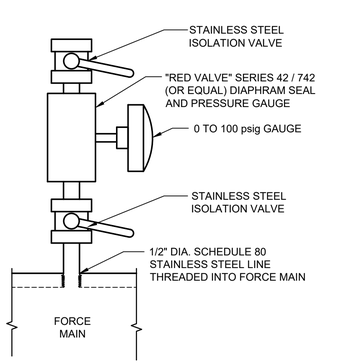

PRESSURE GAUGE DETAIL
NO SCALE

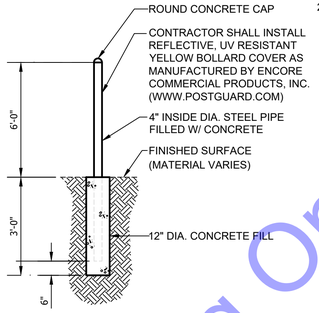

BOLLARD DETAIL
NO SCALE

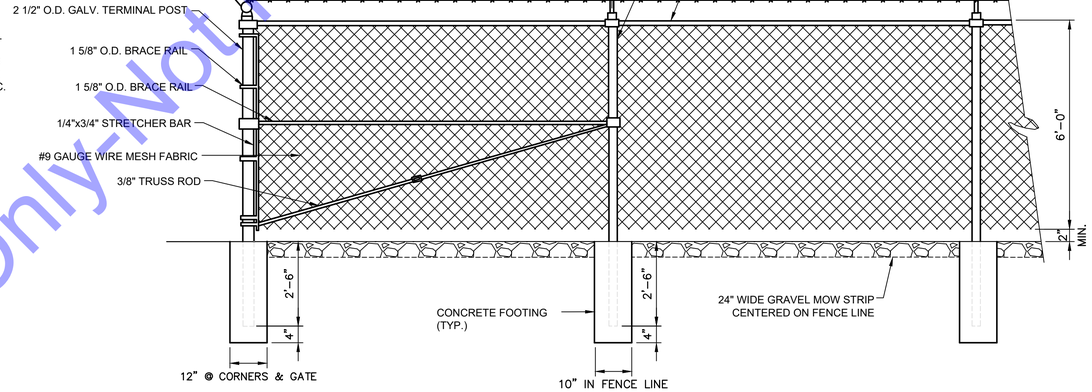

CHAIN LINK FENCE DETAIL
NO SCALE

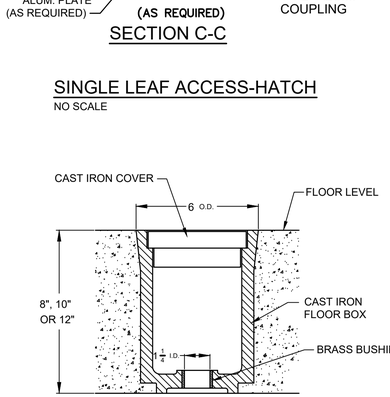

VALVE FLOOR BOX WITH COVER DETAIL
NO SCALE

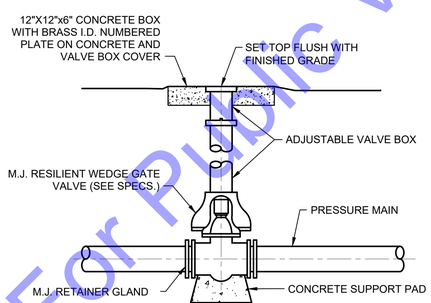

BURIED PLUG/GATE VALVE AND BOX DETAIL
NO SCALE

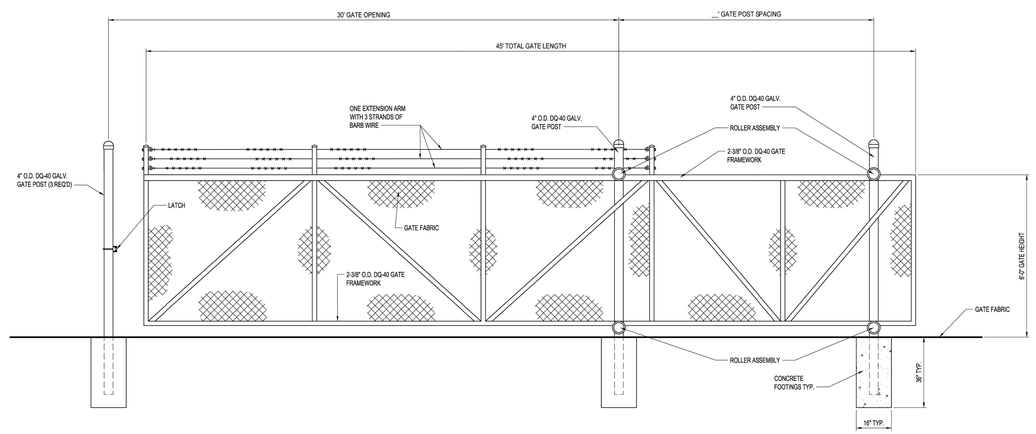

3 CANTILEVER SLIDE GATE DETAIL
NOT TO SCALE

For Public Viewing Only-Not For Download

COMMONWEALTH ENGINEERS, INC.
A wealth of resources to master a common goal.
https://commonwealthengineers.com/

RUDOLPH J. NOTTICH
REGISTERED
No. PE19400077
INDIANA PROFESSIONAL ENGINEER
Signature 10/03/2025 Date

TOWN OF NEWBURGH
WARRICK COUNTY, INDIANA

WASTEWATER TREATMENT PLANT FLOW EQ BASIN

© 2025 BY COMMONWEALTH ENGINEERS, INC. ALL RIGHTS RESERVED. REPRODUCTION BY ANY MEANS WHOLE OR IN PART WITHOUT PERMISSION IS PROHIBITED

Indiana 811 Know what's below. 811 before you dig. 1-800-382-5544 (IT'S THE LAW)

No.	Submittal / Revision	By	Date

Designed By:	Drawn By:	Checked By:
DOF	DMJ	ETP
Issue Date:	Project No:	Scale:
10/03/25	S18005-041	AS SHOWN

MISCELLANEOUS DETAILS V

Drawing No:
MD05
Sheet: 73 OF 161

File: Z:\SHARED\IN CLIENTS M-Z\NEWBURGH\S18005 ON CALL SEWER ENG SVCS\041 WWTP FLOW EQ BASIN\06 CADD\ CURRENT FILES\1 DRAWINGS\07-EC & MISC DETAILS - NEWBURGH EQ.DWG
Saved: 10/2/2025 12:02:34 PM Plotted: 10/2/2025 2:10:55 PM Current User: Drew Jenkins LastSavedBy: djenkins

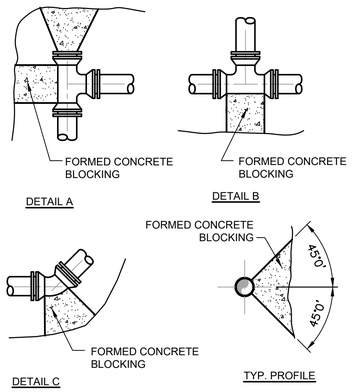

TABLE OF DIMENSIONS FOR CONCRETE BLOCKING																							
SIZE	TEE				PLUG					90° BEND				45° BEND				22° BEND				11° BEND			
PIPE	L	T	W	D	L	T	W	D	s	L	T	W	D	L	T	W	D	L	T	W	D	L	T	W	D
4"	18"	12"	12"	8"	18"	12"	18"	18"	2"	24"	12"	24"	8"	18"	8"	12"	8"	18"	8"	12"	8"	15"	8"	12"	6"
6"	18"	12"	12"	8"	18"	12"	18"	18"	2"	24"	15"	24"	8"	18"	10"	12"	8"	18"	10"	12"	8"	18"	10"	18"	6"
8"	30"	12"	24"	8"	30"	18"	30"	24"	4"	36"	16"	30"	8"	24"	12"	18"	8"	24"	18"	18"	8"	24"	12"	18"	8"
10"	36"	18"	30"	10"	36"	18"	36"	24"	4"	48"	20"	36"	10"	30"	14"	24"	10"	30"	14"	24"	10"	24"	14"	18"	8"
12"	48"	18"	36"	10"	42"	18"	42"	24"	4"	54"	24"	48"	10"	36"	16"	30"	10"	36"	16"	30"	10"	30"	16"	24"	10"
14"	54"	24"	42"	12"	48"	18"	48"	30"	6"	60"	28"	60"	12"	42"	16"	42"	12"	42"	16"	42"	12"	33"	16"	27"	12"
16"	60"	24"	48"	12"	54"	18"	54"	30"	6"	66"	32"	63"	12"	48"	18"	48"	12"	48"	18"	48"	12"	36"	18"	30"	12"
18"	66"	30"	60"	14"	60"	24"	60"	36"	6"	66"	36"	66"	14"	54"	18"	54"	14"	54"	18"	54"	14"	39"	18"	33"	14"
20"	72"	30"	60"	14"	66"	24"	66"	36"	8"	72"	40"	69"	14"	60"	20"	60"	14"	60"	20"	60"	14"	42"	20"	36"	14"
24"	84"	36"	72"	18"	78"	30"	78"	42"	8"	84"	48"	75"	18"	72"	22"	72"	18"	72"	22"	72"	18"	48"	22"	42"	18"
30"	96"	42"	78"	24"	96"	36"	78"	48"	10"	108	54"	96"	24"	84"	24"	72"	24"	72"	26"	72"	24"	54"	26"	48"	24"
42"	144	48"	96"	36"	144	42"	96"	60"	10"	180	66"	144	36"	120	36"	96"	36"	84"	34"	72"	36"	60"	34"	48"	36"

NOTES:

1. FOR TEE WITH BRANCH UNEQUAL TO RUN USE TEE TYPE KICKER WITH D, L, AND W DIMENSIONS THE SAME AS THOSE FOR PLUG WITH SAME DIAMETER AS BRANCH OF TEE, SELECT "T" DIMENSIONS FROM TEE TABLE UNDER COLUMN HEADED BY THE SIZE OF THE BRANCH
2. IF EXACT SIZE PIPE BLOCKING IS NOT SHOWN USE NEXT LARGER SIZE
3. DEPTH "D" MAY BE GREATER THAN SPECIFIED TO ALLOW WORKING SPACE BLOCKING MUST BE PLACED AGAINST UNDISTURBED EARTH OR ROCK
4. CONCRETE BLOCKING SHALL BE CLASS "B"

THRUST BLOCKING DETAILS
NO SCALE

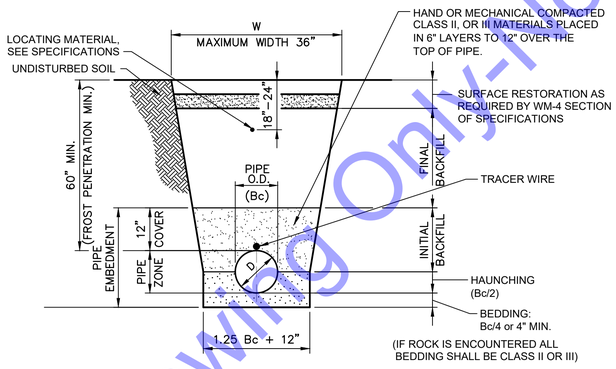

W = MAXIMUM ALLOWABLE TRENCH WIDTH FOR PIPE AS PER ASTM NOT TO EXCEED FOUR (4) FEET FOR 6" THROUGH 24" PIPE NOT SIX (6) FEET FOR 27" THROUGH 48" PIPE

D = PIPE DIAMETER (INTERNAL)

Bc = PIPE DIAMETER (EXTERNAL)

APPLICATION	BEDDING & HUNCHING INITIAL BACKFILL	FINAL BACKFILL
GRASSY AREA OR NEW PAVED AREAS	CLASS I, OR II MATERIAL (REFER TO WORKMANSHIP & MATERIALS SPECIFICATIONS	SELECTED EXCAVATED MATERIAL
OR ANY AREA SUBJECT TO VEHICULAR TRAFFIC	CLASS I, II OR III MATERIAL (REFER TO WORKMANSHIP & MATERIALS SPECIFICATIONS	COMPACTED GRANULAR MATERIAL

NOTES:

1. INITIAL BACKFILL STOPS AT A POINT 12" ABOVE THE TOP OF THE PIPE. BACKFILLING ABOVE THIS POINT SHALL BE IN ACCORDING WITH THE SPECIFICATIONS AND AS REQUIRED BY HEREIN.
2. BEDDING, HAUNCHING AND INITIAL BACKFILL SHALL BE CLASS I, II, OR III MATERIALS ACCORDING TO THE WORKMANSHIP AND MATERIALS SPECIFICATIONS.
3. WORK FALLING UNDER THE JURISDICTION OF THE INDIANA DEPARTMENT OF TRANSPORTATION (INDOT) SHALL UTILIZE COMPACTED GRANULAR BACKFILL MATERIAL FOR INITIAL AND FILL BACKFILL ANYWHERE WITHIN 12 FEET OF THE EDGE OF PAVEMENT.
4. WORK NOT FALLING UNDER THE JURISDICATION OF IN. DEPT. OF TRANSPORTATION SHALL UTILIZE COMPACTED GRANULAR BACKFILL MATERIAL FOR INITIAL AND FINAL BACKFILL ANYWHERE WITHIN 5 FEET OF THE EDGE OF PAVEMENT.

TRENCH DETAIL FOR WATER MAIN
NO SCALE

'A' PIPE SIZE	'B'	'C'	'D'	'E'	'F'	'G'	'H'
18"	3'-9"	8'-8"	4'-6"	9"	3'-6"	2'-0"	1'-8"

NOTE: FOR OUTFALL STRUCTURE ON SHEET D9-01, DIMENSION "G" SHALL BE MODIFIED TO 3'-0".

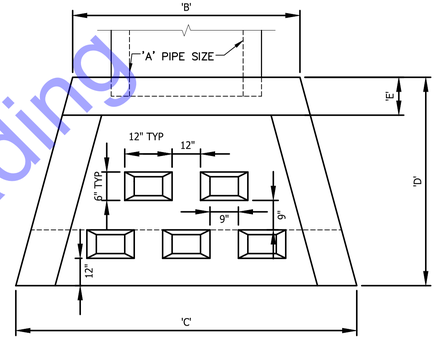

PLAN

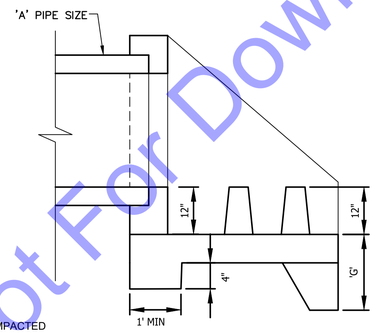

SECTION

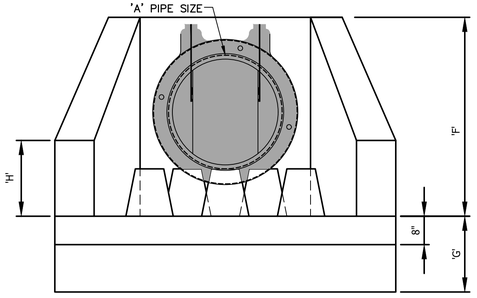

ELEVATION

GENERAL NOTES:

1. # 4 REBAR 12" C.C. EA. WAY GRADE 60
2. 3/4" CHAMFER ON ALL EXPOSED EDGES
3. CONCRETE 4500 PSI @ 28 DAYS
4. 2" MIN CONCRETE COVER FOR REINFORCEMENT
5. ENERGY DISSIPATERS. AS NEEDED (12"x6"x12")
6. CONTRACTOR TO CONFIRM FLAPGATE LOCATION AND INSTALLATION WITH MANUFACTURER TO CONFIRM GATE CAN BE SECURELY ANCHORED PER MANUFACTURER'S RECOMMENDATIONS AND THAT GATE WILL NOT HIT DISSIPATERS.

PRECAST CONCRETE HEADWALL DETAIL (WITH DISSIPATERS)
NO SCALE

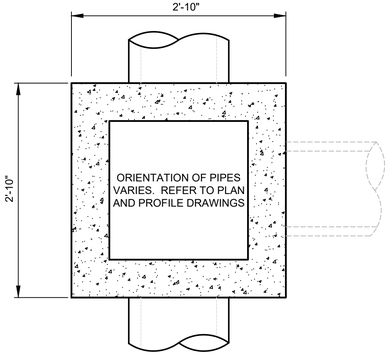

PLAN

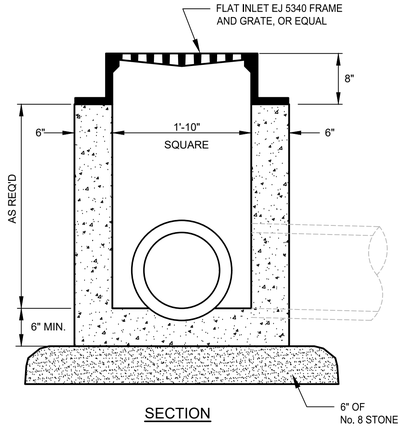

SECTION

INLET TYPE A-2
NOT TO SCALE

GENERAL STORM STRUCTURE NOTE:
FOR ALL STORM STRUCTURES LOCATED WITHIN 8' OF PROPOSED WATER MAIN, GASKETED JOINTS PER ASTM C443 ARE REQUIRED. BOOT CONNECTION SHALL BE PROVIDED PER ASTM C923 AND GROUTED IN INTERIOR. PROVIDE EXTERIOR BITUMINOUS COATING FOR CONCRETE.

For Public Viewing Only-Not For Downloading

COMMONWEALTH ENGINEERS, INC.
A wealth of resources to master a common goal.
https://commonwealthengineers.com/

RUDOLPH J. NOVITCH
REGISTERED
No. PE19400077
INDIANA
PROFESSIONAL ENGINEER
Signature 10/03/2025 Date

TOWN OF NEWBURGH
WARRICK COUNTY, INDIANA

WASTEWATER TREATMENT
PLANT FLOW EQ BASIN

© 2025 BY COMMONWEALTH ENGINEERS, INC. ALL RIGHTS RESERVED. REPRODUCTION IN ANY MEDIUM, IN WHOLE OR IN PART WITHOUT PERMISSION IS PROHIBITED

Indiana 811 Know what's below. 811 before you dig. 1-800-382-5544 (ITS THE LAW)

No.	Submittal / Revision	By	Date

Designed By:	Drawn By:	Checked By:
DOF	DMJ	ETP
Issue Date: 10/03/25	Project No: S18005-041	Scale: AS SHOWN

MISCELLANEOUS DETAILS VI

Drawing No:
MD06
Sheet: 74 OF 161

File: Z:\SHARED\IN CLIENTS M-Z\NEWBURGH\S18005 ON CALL SEWER ENG SVCS\041 WWTP FLOW EQ BASIN\06 CAD\A CURRENT FILES\1 DRAWINGS\07 EC & MISC DETAILS - NEWBURGH EQ.DWG
Saved: 10/2/2025 12:02:04 PM Plotted: 10/2/2025 2:10:57 PM Current User: Drew Jenkins LastSavedBy: djenkins

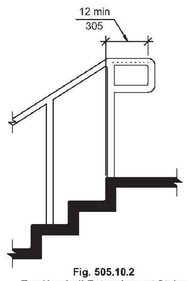

Fig. 505.10.2
Top Handrail Extensions at Stairs

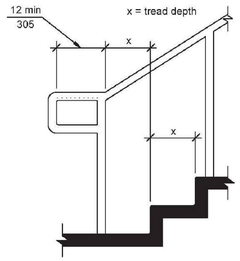

Fig. 505.10.3
Bottom Handrail Extensions at Stairs

NOTE:

CONTRACTOR SHALL ENSURE HANDRAIL INSTALLED MEETS ADA COMPLIANCE AND SHALL REFER TO DETAILED SPECIFICATIONS FOR MORE INFORMATION.

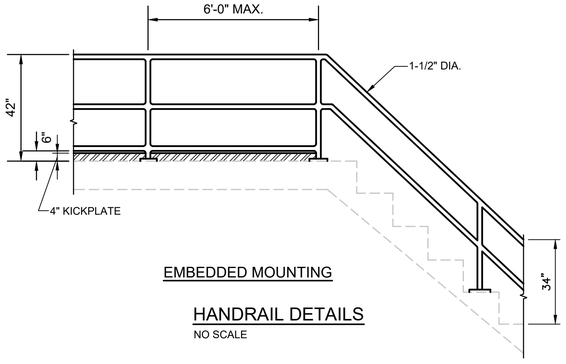

EMBEDDED MOUNTING

HANDRAIL DETAILS
NO SCALE

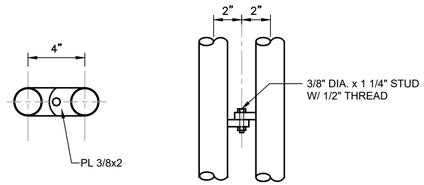

GATE HINGE DETAIL

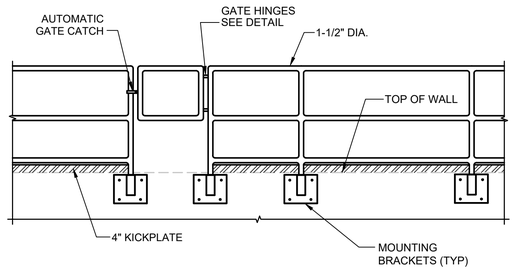

SIDE MOUNTING ELEVATION

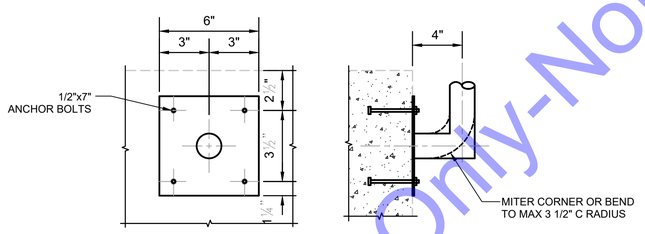

PLAN SECTION

SIDE MOUNTING PLATE

HANDRAIL-SIDE MOUNT DETAILS
NO SCALE

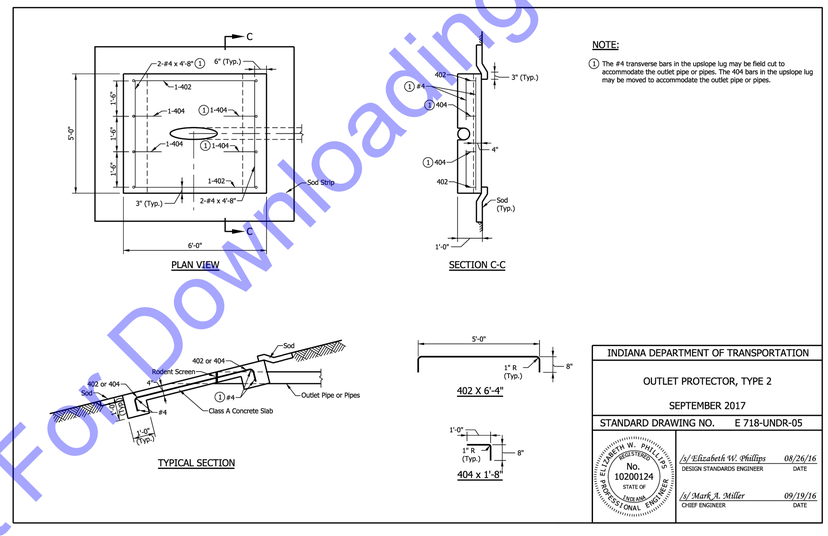

INDIANA DEPARTMENT OF TRANSPORTATION

OUTLET PROTECTOR, TYPE 2

SEPTEMBER 2017

STANDARD DRAWING NO. E 718-UNDR-05

ELIZABETH W. PHILLIPS — REGISTERED — No. 10200124 — STATE OF INDIANA — PROFESSIONAL ENGINEER

/s/ Elizabeth W. Phillips 08/26/16
DESIGN STANDARDS ENGINEER DATE

/s/ Mark A. Miller 09/19/16
CHIEF ENGINEER DATE

PIPE OUTLET PROTECTION DETAIL
NO SCALE

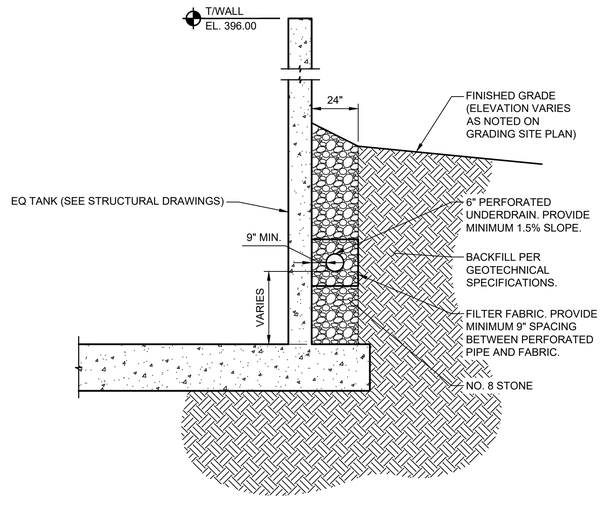

PERFORATED UNDERDRAIN DETAIL AT TANK WALL
NO SCALE

For Public Viewing Only-Not For Downloading

COMMONWEALTH ENGINEERS, INC.
A wealth of resources to master a common goal.
https://commonwealthengineers.com/

RUDOLPH J. NOLTICH — REGISTERED — No. PE19400077 — STATE OF INDIANA — PROFESSIONAL ENGINEER
Signature 10/03/2025 Date

TOWN OF NEWBURGH
WARRICK COUNTY, INDIANA

WASTEWATER TREATMENT
PLANT FLOW EQ BASIN

© 2025 BY COMMONWEALTH ENGINEERS, INC. ALL RIGHTS RESERVED. REPRODUCTION BY ANY METHOD, IN WHOLE OR IN PART WITHOUT PERMISSION IS PROHIBITED

Know what's below. 811 before you dig.
1-800-382-5544
(ITS THE LAW)

No.	Submittal / Revision	By	Date

Designed By:	Drawn By:	Checked By:
DOF	DMJ	ETP
Issue Date:	Project No:	Scale:
10/03/25	S18005-041	AS SHOWN

MISCELLANEOUS
DETAILS VII

Drawing No:
MD07
Sheet: 75 OF 161

File: Z:\SHARED\IN CLIENTS M-Z\NEWBURGH\S18005 ON CALL SEWER ENG SVCS\041 WWTP FLOW EQ BASIN\05 CADA CURRENT FILES\1 DRAWINGS\07 EC & MISC DETAILS - NEWBURGH EQ.DWG
Saved: 10/2/2025 12:02:04 PM Plotted: 10/2/2025 2:11:00 PM Current User: Drew Jenkins LastSavedBy: djenkins

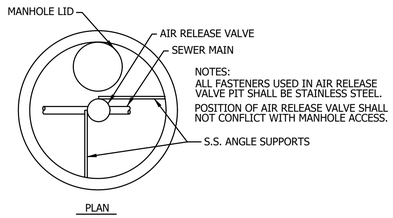

NOTES:

1. FOR 3" AND 4" COMBINATION AIR VALVES, 24" PVC FORCE MAIN SHALL BE TAPPED WITH STAINLESS STEEL TAPPING SADDLE WITH THREADED OUTLET. BALL VALVE, PIPE NIPPLES, AND ALL OTHER HARDWARE SHALL BE STAINLESS STEEL.
2. FOR 6" COMBINATION AIR VALVES, 24" PVC FORCE MAIN SHALL BE TAPPED WITH STAINLESS STEEL TAPPING SADDLE WITH FLANGED OUTLET. A 6" STAINLESS STEEL BALL VALVE WITH FLANGED CONNECTIONS SHALL BE BOLTED TO THE TAPPING SADDLE, AND THE 6" STAINLESS STEEL AIR VALVE SHALL BE FLANGE CONNECTED TO THE BALL VALVE. ALL HARDWARE SHALL BE STAINLESS STEEL.
3. BLOCKING SHALL BE INSTALLED AT THE BASE TO SUPPORT THE TEE.

COMBINATION AIR VALVE STRUCTURE - WITH BOLT DOWN WATERTIGHT CASTING

NO SCALE

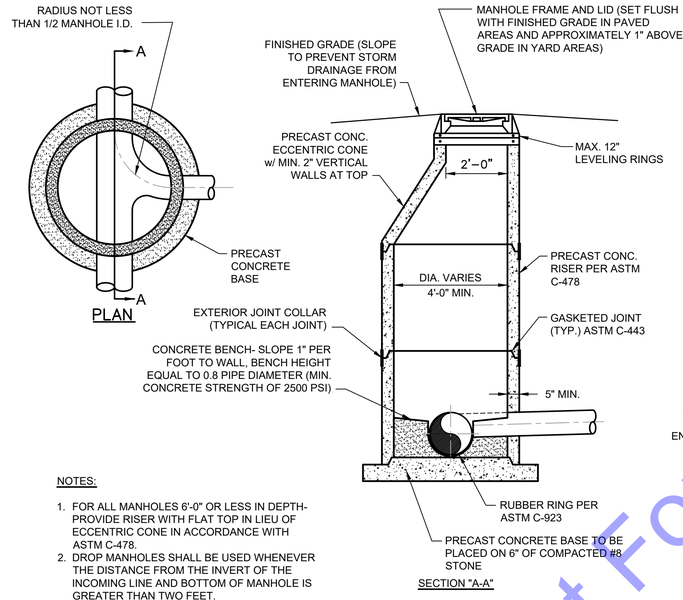

NOTES:

1. FOR ALL MANHOLES 6'-0" OR LESS IN DEPTH- PROVIDE RISER WITH FLAT TOP IN LIEU OF ECCENTRIC CONE IN ACCORDANCE WITH ASTM C-478.
2. DROP MANHOLES SHALL BE USED WHENEVER THE DISTANCE FROM THE INVERT OF THE INCOMING LINE AND BOTTOM OF MANHOLE IS GREATER THAN TWO FEET.

STANDARD SANITARY MANHOLE DETAIL

NO SCALE

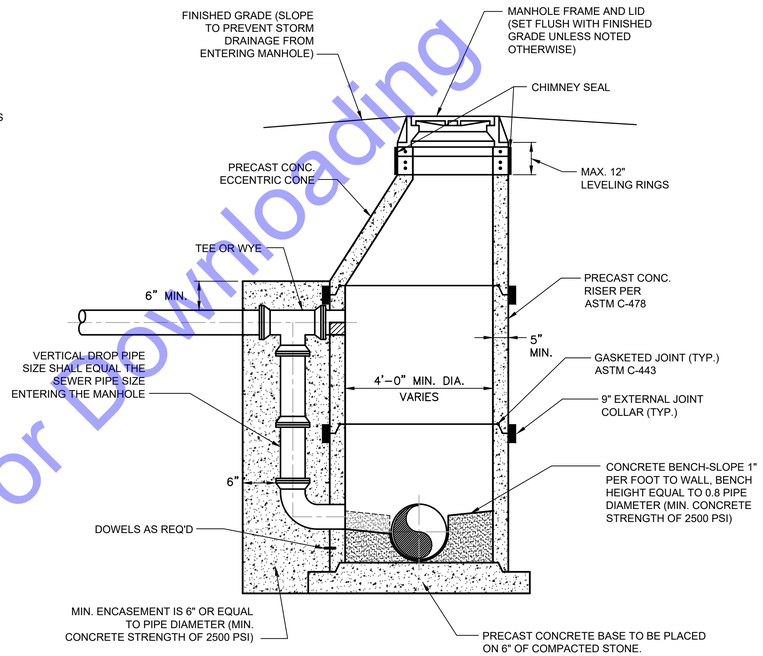

NOTES:

1. FOR ALL MANHOLES 6'–0" OR LESS IN DEPTH – PROVIDE RISER WITH FLAT TOP IN LIEU OF ECCENTRIC CONE IN ACCORDANCE WITH ASTM C–478
2. THE CROWN OF THE INFLUENT PIPE SHALL BE AT OR ABOVE THE CROWN OF THE OUTLET PIPE
3. DROP MANHOLES SHALL BE USED WHENEVER THE DISTANCE FROM THE INVERT OF THE INCOMMING LINE AND BOTTOM OF MANHOLE IS GREATER THAN TWO FEET.

PRECAST DROP MANHOLE DETAIL

NO SCALE

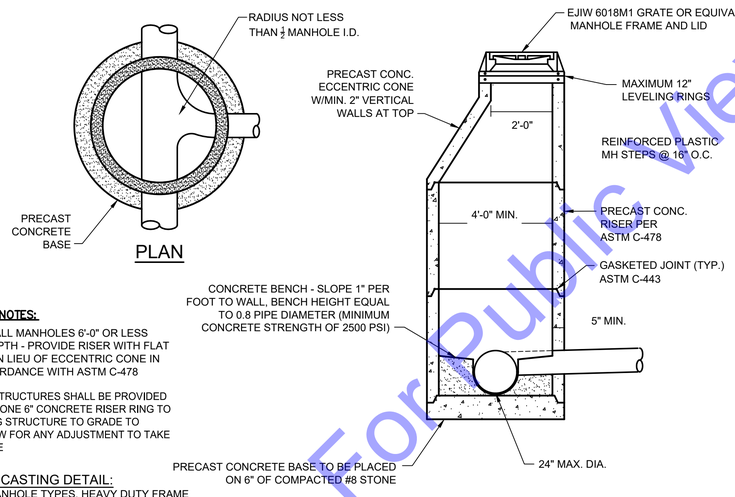

GENERAL NOTES:

1. FOR ALL MANHOLES 6'-0" OR LESS IN DEPTH - PROVIDE RISER WITH FLAT TOP IN LIEU OF ECCENTRIC CONE IN ACCORDANCE WITH ASTM C-478
2. ALL STRUCTURES SHALL BE PROVIDED WITH ONE 6" CONCRETE RISER RING TO BRING STRUCTURE TO GRADE TO ALLOW FOR ANY ADJUSTMENT TO TAKE PLACE

FRAME & CASTING DETAIL:

FOR ALL MANHOLE TYPES, HEAVY DUTY FRAME AND CASTINGS SHALL BE USED. NEENAH FOUNDRY COMPANY R: 2502 WITH TYPE C GRATE OR EAST JORDAN IRON WORKS 1020 WITH TYPE M2 GRATE SHALL BE ACCEPTABLE UNLESS OTHERWISE SPECIFIED.

STORM MANHOLE TYPE `C'

NO SCALE

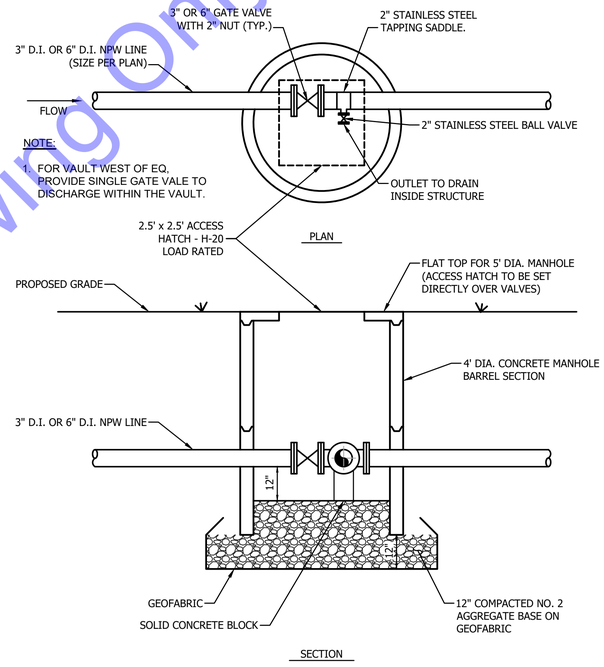

NON-POTABLE WATER DRAINING STRUCTURE DETAIL

NO SCALE

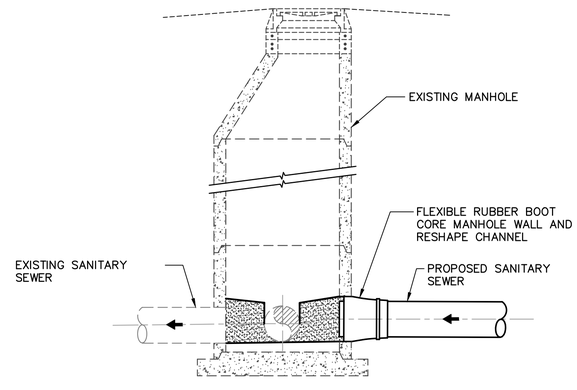

EXISTING MANHOLE ENTRY DETAIL

NO SCALE

For Public Viewing Only-Not For Downloading

COMMONWEALTH ENGINEERS, INC.
A wealth of resources to master a common goal.
https://commonwealthengineers.com/
RUDOLPH J. NOVLICH REGISTERED No. PE19400077 INDIANA PROFESSIONAL ENGINEER
Signature 10/03/2025 Date

TOWN OF NEWBURGH
WARRICK COUNTY, INDIANA

WASTEWATER TREATMENT
PLANT FLOW EQ BASIN

© 2025 BY COMMONWEALTH ENGINEERS, INC. ALL RIGHTS RESERVED. REPRODUCTION BY ANY METHOD, IN WHOLE OR IN PART WITHOUT PERMISSION IS PROHIBITED

Know what's below. 811 before you dig
1-800-382-5544
(ITS THE LAW)

No.	Submittal / Revision	By	Date

Designed By:	Drawn By:	Checked By:
DOF	DMJ	ETP
Issue Date:	Project No:	Scale:
10/03/25	S18005-041	AS SHOWN

MISCELLANEOUS DETAILS VIII

Drawing No:
MD08
Sheet: 76 OF 161

File: Z:\SHARED\IN CLIENTS M-Z\NEWBURGH\S18005 ON CALL SEWER ENG SVCS\041 WWTP FLOW EQ BASIN\05 CADA CURRENT FILES\1 DRAWINGS\07 EC & MISC DETAILS - NEWBURGH EQ.DWG
Saved: 10/2/2025 12:02:04 PM Plotted: 10/2/2025 2:11:03 PM Current User: Drew Jenkins LastSavedBy: djenkins

METHOD FOR TREATING EDGES EXPOSED TO FLOW

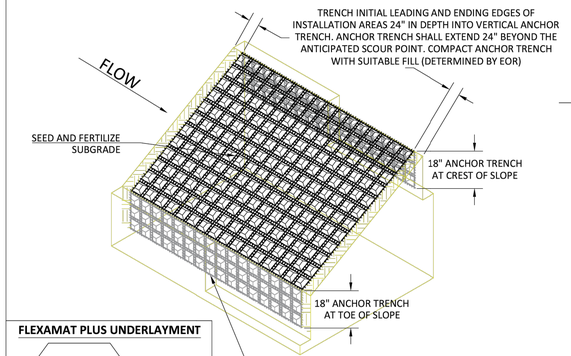

ANCHOR TRENCHES AND PERPENDICULAR OVERLAP SEAMS

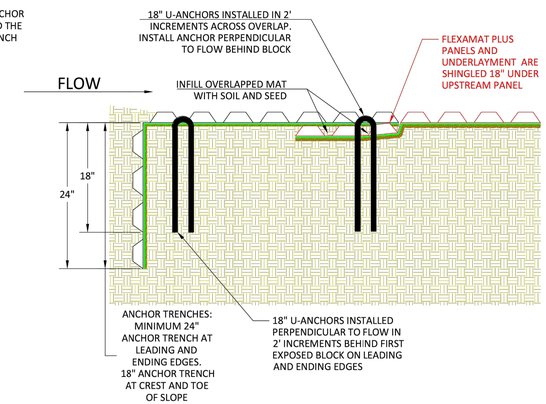

FLEXAMAT PLUS UNDERLAYMENT

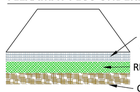

FLEXAMAT PLUS - STREAM & RIVERBANK MAT LAYOUT PARALLEL WITH FLOW

CONSTRUCTION NOTES:

1. AN ENGINEER OR MANUFACTURERS REPRESENTATIVE SHALL BE ONSITE FOR THE START OF THE INSTALLATION.
2. THE STREAM OR RIVERBANK MUST BE STABLE, UNIFORMLY GRADED, FREE OF ROCKS, ROOTS, AND OTHER DEBRIS.
3. PRIOR TO THE FLEXAMAT PLUS INSTALLATION SEED AND FERTILIZE THE SUBGRADE WITH SITE SPECIFIC MIX; INCLUDING NATIVE GRASSES, IN ACCORDANCE WITH THE PROJECT PLANS AND SPECIFICATIONS.
4. FLEXAMAT PLUS ARMOR SHALL BE CONTINUOUS THE ENTIRE LENGTH OF SLOPE. FLEXAMAT PLUS IS AVAILABLE IN WIDTHS OF 4', 5.5', 8', 10', 12', AND 16'. MATS SHALL BE INSTALLED PARALLEL WITH STREAM FLOW WHEN ARMORED SLOPE LENGTH IS LESS THAN 16', INCLUDING MATERIAL FOR ANCHOR TRENCHES. IF SLOPE IS LONGER THAN 16' SEE STREAM BANK INSTALLATION PERPENDICULAR TO FLOW INSTALLATION DETAIL.
5. THE INITIAL LEADING AND ENDING EDGES OF FLEXAMAT INSTALLATION AREA SHALL BE EMBEDDED 24" VERTICALLY BEYOND THE ANTICIPATED SCOUR POINT. THE ANCHOR TRENCH SHALL BE FILLED AND COMPACTED WITH SUITABLE FILL. (AS SPECIFIED BY EOR).
   - 5.1. INSTALL 18" VERTICAL ANCHOR TRENCH AT CREST OF SLOPE.
6. FOR ADDITIONAL SECTIONS OF MAT, OVERLAP THE DOWNSTREAM SECTION 18" WITH UPSTREAM SECTION OF MAT. PRIOR TO INSTALLING OVERLAP, FLIP UPSTREAM MAT BACK 24". EXCAVATE 2.25" OF SOIL 18" FROM THE END OF THE UPSTREAM MAT. DOWNSTREAM SECTION IS THEN LAID IN THE SHALLOW TRENCH. RETURN AND TAMP SOIL OVER INITIAL EDGE AND SEED AREA. FLIP END OF UPSTREAM MAT OVER THE SOIL COVERED INITIAL LEADING EDGE. FLIP END OF UPSTREAM MAT OVER THE SOIL COVERED INITIAL LEADING EDGE OF DOWNSTREAM MAT.
7. INSTALL 18" U-ANCHORS IN 2' INCREMENTS ACROSS THE OVERLAP. INSTALL ANCHORS DIRECTLY BEHIND BLOCKS. U-ANCHORS CONSIST OF #3 REBAR WITH 18" LEGS.
8. AT THE END OF THE ARMORED STREAM BANK, EMBED THE MAT 24" PAST THE ANTICIPATED SCOUR POINT IN A TERMINATION TRENCH. THE TRENCH SHALL BE FILLED AND COMPACTED WITH SUITABLE FILL OR OTHER (AS SPECIFIED BY EOR).

MOTZ ENTERPRISES, INC.
Flexamat
(513)772-6689
Info@Flexamat.com
Flexamat.com

REV - 1

METHOD FOR TREATING EDGES EXPOSED TO FLOW

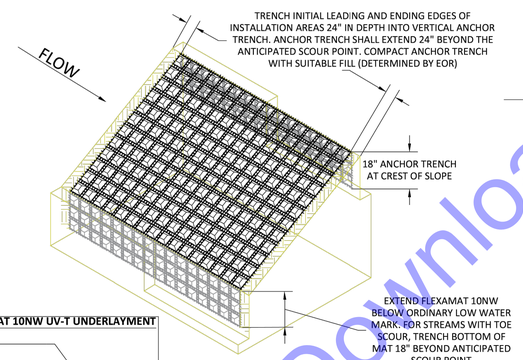

ANCHOR TRENCHES AND PERPENDICULAR ABUTMENT SEAMS

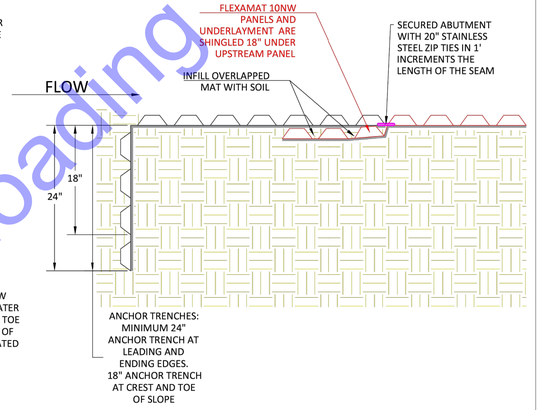

FLEXAMAT 10NW UV-T UNDERLAYMENT

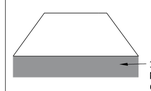

FLEXAMAT 10NW - STREAM & RIVERBANK MAT LAYOUT PARALLEL WITH FLOW

CONSTRUCTION NOTES:

1. AN ENGINEER OR MANUFACTURERS REPRESENTATIVE SHALL BE ONSITE FOR THE START OF THE INSTALLATION.
2. THE STREAM OR RIVERBANK MUST BE STABLE, UNIFORMLY GRADED, FREE OF ROCKS, ROOTS, AND OTHER DEBRIS.
3. FLEXAMAT 10oz. NON-WOVEN ARMOR SHALL BE CONTINUOUS THE ENTIRE LENGTH OF SLOPE. FLEXAMAT 10oz. NON-WOVEN IS AVAILABLE IN WIDTHS OF 4', 5.5', 8', 10', 12', AND 16'. MATS SHALL BE INSTALLED PARALLEL WITH STREAM FLOW WHEN ARMORED SLOPE LENGTH IS LESS THAN 16', INCLUDING MATERIAL FOR ANCHOR TRENCHES. IF SLOPE IS LONGER THAN 16' SEE STREAM BANK INSTALLATION PERPENDICULAR TO FLOW INSTALLATION DETAIL.
4. THE INITIAL LEADING AND ENDING EDGES OF FLEXAMAT INSTALLATION AREA SHALL BE EMBEDDED 24" VERTICALLY BEYOND THE ANTICIPATED SCOUR POINT. THE ANCHOR TRENCH SHALL BE FILLED AND COMPACTED WITH SUITABLE FILL. (AS SPECIFIED BY EOR).
   - 4.1. INSTALL 18" VERTICAL ANCHOR TRENCH AT CREST OF SLOPE.
5. FOR ADDITIONAL SECTIONS OF MAT, OVERLAP THE DOWNSTREAM SECTION 18" WITH UPSTREAM SECTION OF MAT. PRIOR TO INSTALLING OVERLAP, FLIP UPSTREAM MAT BACK 24". EXCAVATE 2.25" OF SOIL 18" FROM THE END OF THE UPSTREAM MAT. DOWNSTREAM SECTION IS THEN LAID IN THE SHALLOW TRENCH. RETURN AND TAMP SOIL OVER INITIAL EDGE. FLIP END OF UPSTREAM MAT OVER THE SOIL COVERED INITIAL LEADING EDGE. FLIP END OF UPSTREAM MAT OVER THE SOIL COVERED INITIAL LEADING EDGE OF DOWNSTREAM MAT. SECURE ABUTMENT WITH 20" STAINLESS STEEL ZIP TIES IN 1' INCREMENTS THE LENGTH OF THE SEAM.
6. AT THE TOE OF SLOPE OF THE ARMORED STREAM BANK, EMBED THE MAT 18" PAST THE ANTICIPATED SCOUR POINT IN AN ANCHOR TRENCH. THE TRENCH SHALL BE FILLED AND COMPACTED WITH SUITABLE FILL OR OTHER (AS SPECIFIED BY EOR).

MOTZ ENTERPRISES, INC.
Flexamat
(513)772-6689
Info@Flexamat.com
Flexamat.com

REV - 1

ISOMETRIC VIEW OF OUTLET AND SLOPE PROTECTION

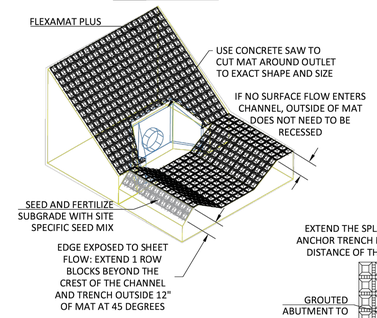

PROFILE VIEW OF SPLASH PAD AND GROUTED ANCHOR TRENCHES

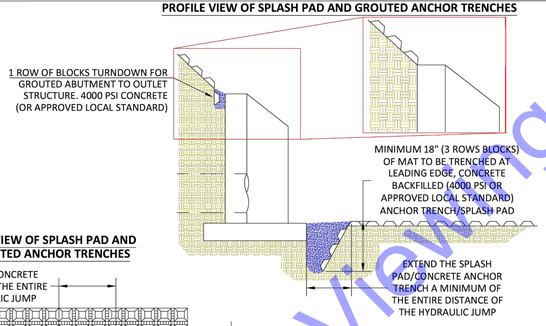

TOP VIEW OF SPLASH PAD AND GROUTED ANCHOR TRENCHES

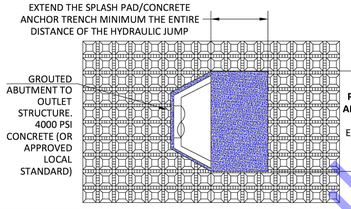

FLEXAMAT PLUS UNDERLAYMENT

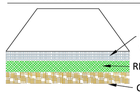

FLEXAMAT PLUS - OUTLET ARMORING

CONSTRUCTION NOTES:

1. GRADE CHANNEL SO THAT WATER WILL FLOW DOWN CENTER OF THE CHANNEL AND BE CONTAINED TO THE CHANNEL. ALL SUBGRADE SURFACES PREPARED FOR PLACEMENT OF MATS SHALL BE SMOOTH AND FREE OF ALL ROCKS, STICKS, ROOTS, OTHER PROTRUSIONS, OR DEBRIS OF ANY KIND. THE PREPARED SURFACE SHALL PROVIDE A FIRM UNYIELDING FOUNDATION FOR THE MATS.
2. PRIOR TO FLEXAMAT PLUS INSTALLATION SEED AND FERTILIZER SUBGRADE WITH SITE SPECIFIC SEED MIX IN ACCORDANCE WITH THE PROJECT PLANS AND SPECIFICATIONS.
3. INSTALL FLEXAMAT ROLLS. AVAILABLE WIDTHS ARE 4', 5.5', 8', 10', 12', AND 16' AVAILABLE IN CUSTOM LENGTHS. FOR WIDTHS WIDER THAN 16', INSTALL 15.5' WIDE MAT WITH 12" GEOGRID EXTENSION AND 6" UNDERLAYMENT EXTENSION.
   - 3.1. WHERE POSSIBLE AVOID LONGITUDINAL ABUTMENT SEAMS IN CHANNEL BOTTOM.
   - 3.2. FOR OUTLET PROTECTION WIDER THAN 16' SEE CHANNEL PARALLEL TO FLOW INSTALLATION DETAIL.
   - 3.3. FOR OUTLET PROTECTION THAT REQUIRES MORE THAN 1 MAT IN LENGTH TO COVER CHANNEL SEE CHANNEL PARALLEL TO FLOW INSTALLATION DETAIL.
4. AT THE BEGINNING OF CHANNEL, THE INITIAL LEADING EDGE OF FLEXAMAT EXPOSED TO CONCENTRATED FLOW SHALL BE EMBEDDED 18" VERTICALLY INTO ANCHOR TRENCH. THE TRENCH SHALL BE FILLED WITH 4,000 PSI CONCRETE.
5. INFILL FLEXAMAT BLOCKS BELOW HEADWALL WITH 4000 PSI CONCRETE TO CREATE SPLASH PAD PER DIMENSIONS INDICATED. GROUT SHALL EXTEND TO THE TOP OF THE FLEXAMAT BLOCKS.
6. AT THE END OF THE ARMORED CHANNEL, EMBED THE MAT 18" IN A TERMINATION TRENCH. FILL AND COMPACT TERMINATION TRENCH WITH A COHESIVE FILL.

GUIDANCE TABLE FOR STORMWATER OUTFALL PROTECTION

PIPE DIAMETER		FLEXAMAT WIDTH	FLEXAMAT LENGTH (*MIN)
12"	8 CFS	5.5'	5'
18"	20 CFS	8'	8'
24"	30 CFS	8'	10'
36"	75 CFS	12'	16'
48"	100 CFS	16'	20'
60"	150 CFS	20'	25'

*CONSULT MANUFACTURER FOR GUIDANCE IF DESIGN DISCHARGE VARIES SIGNIFICANTLY FROM VALUES LISTED IN TABLE.
*LENGTH OF PROTECTION WILL VARY ON THE LENGTH OF THE SLOPE, DEGREE OF SLOPE, OR IF IT IS DISCHARGING ONTO A FLAT AREA. OUTFALLS DISCHARGING ONTO SLOPES, IT IS RECOMMENDED TO EXTEND FLEXAMAT PLUS THE LENGTH OF THE SLOPE AND 3' PAST THE TOE.

MOTZ ENTERPRISES, INC.
Flexamat
(513)772-6689
Info@Flexamat.com
Flexamat.com

REV - 2

For Public Viewing Only-Not for Downloading

COMMONWEALTH ENGINEERS, INC.
A wealth of resources to master a common goal.
https://commonwealthengineers.com/

RUDOLPH J. MOTZ
REGISTERED
No. PE19400077
INDIANA PROFESSIONAL ENGINEER

Signature 10/03/2025 Date

TOWN OF NEWBURGH
WARRICK COUNTY, INDIANA

WASTEWATER TREATMENT PLANT FLOW EQ BASIN

© 2025 BY COMMONWEALTH ENGINEERS, INC. ALL RIGHTS RESERVED. REPRODUCTION MAY NOT BE MADE IN WHOLE OR IN PART WITHOUT PERMISSION IS PROHIBITED

Know what's below. 811 before you dig. 1-800-382-5544 (ITS THE LAW)

No.	Submittal / Revision	By	Date

Designed By:	Drawn By:	Checked By:
DOF	DMJ	ETP
Issue Date: 10/03/25	Project No: S18005-041	Scale: AS SHOWN

MISCELLANEOUS DETAILS IX

Drawing No:
MD09
Sheet: 77 OF 161

File: Z:\SHARED\IN CLIENTS M-Z\NEWBURGH\18005 ON CALL SEWER ENG SVCS\041 WWTP FLOW EQ BASIN\06 CADD\ CURRENT FILES\ I DRAWINGS\07-EC & MISC DETAILS - NEWBURGH EQ.DWG
Saved: 10/2/2025 12:02:04 PM Plotted: 10/2/2025 2:11:16 PM Current User: Drew Jenkins LastSavedBy: djenkins

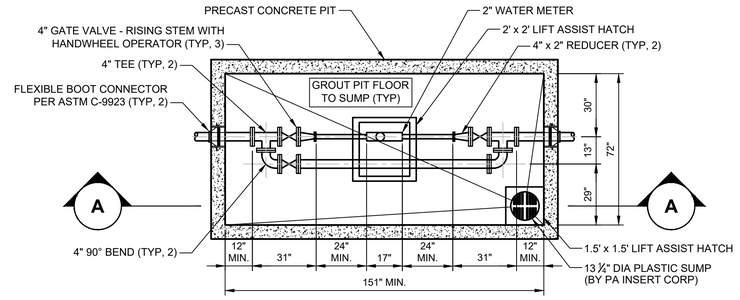

PLAN

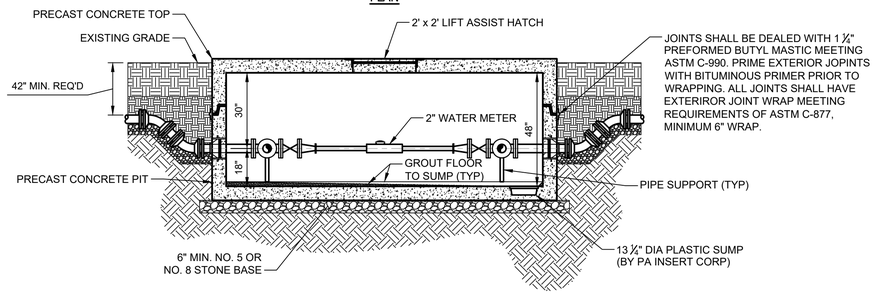

SECTION "A-A"

NOTES:

1. ALL PIPING INSIDE VAULT SHALL BE DUCTILE IRON.
2. ALL PIPING AND ALL VALVES SHALL BE SUPPORTED WITH PIPE SUPPORTS A MINIMUM OF 12" OFF THE FLOOR.
3. ALL FITTING SHALL BE FLANGED WITH STANLESS STEEL BOLTS.

POTABLE WATER VAULT DETAIL

NO SCALE

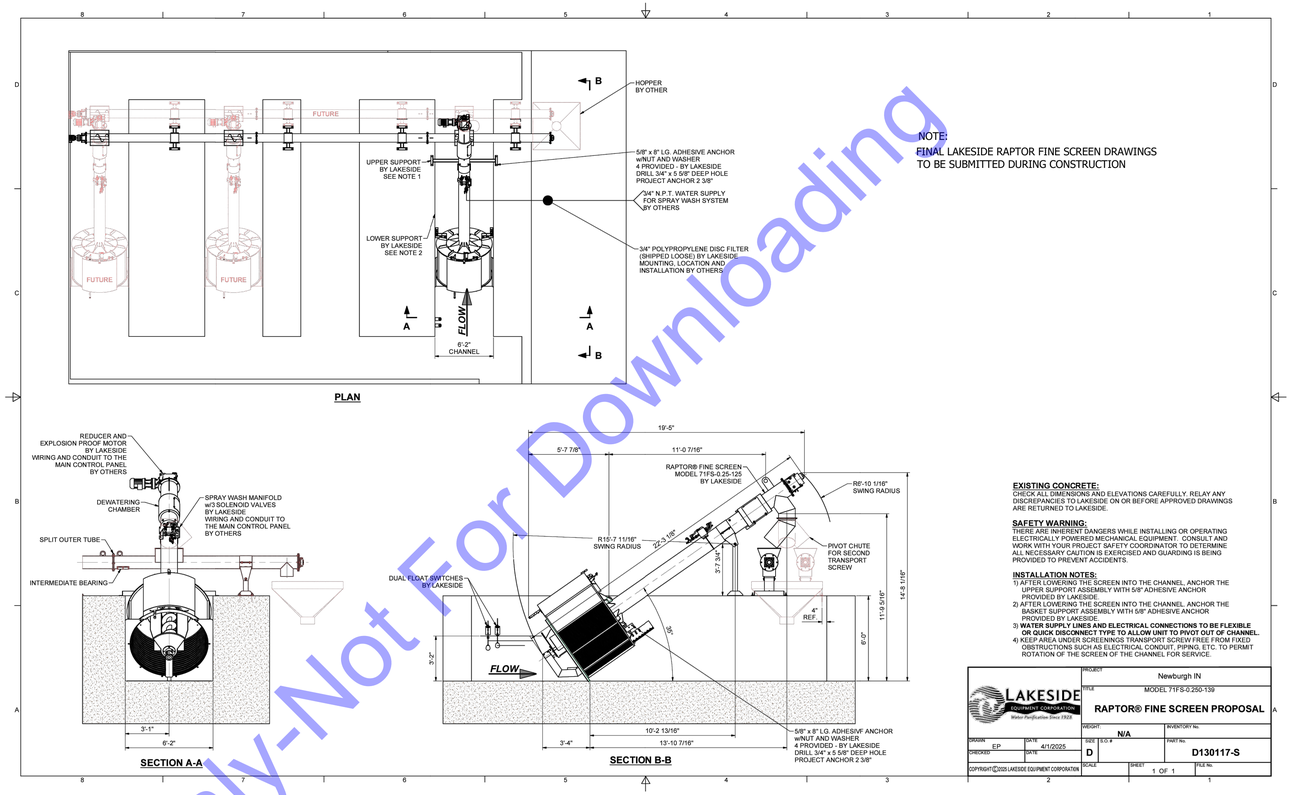

PLAN

NOTE:
FINAL LAKESIDE RAPTOR FINE SCREEN DRAWINGS TO BE SUBMITTED DURING CONSTRUCTION

SECTION A-A

SECTION B-B

EXISTING CONCRETE:
CHECK ALL DIMENSIONS AND ELEVATIONS CAREFULLY. RELAY ANY DISCREPANCIES TO LAKESIDE ON OR BEFORE APPROVED DRAWINGS ARE RETURNED TO LAKESIDE.

SAFETY WARNING:
THERE ARE INHERENT DANGERS WHILE INSTALLING OR OPERATING ELECTRICALLY POWERED MECHANICAL EQUIPMENT. CONSULT AND WORK WITH YOUR PROJECT SAFETY COORDINATOR TO DETERMINE ALL NECESSARY CAUTION IS EXERCISED AND GUARDING IS BEING PROVIDED TO PREVENT ACCIDENTS.

INSTALLATION NOTES:
1) AFTER LOWERING THE SCREEN INTO THE CHANNEL, ANCHOR THE UPPER SUPPORT ASSEMBLY WITH 5/8" ADHESIVE ANCHOR PROVIDED BY LAKESIDE.
2) AFTER LOWERING THE SCREEN INTO THE CHANNEL, ANCHOR THE BASKET SUPPORT ASSEMBLY WITH 5/8" ADHESIVE ANCHOR PROVIDED BY LAKESIDE.
3) **WATER SUPPLY LINES AND ELECTRICAL CONNECTIONS TO BE FLEXIBLE OR QUICK DISCONNECT TYPE TO ALLOW UNIT TO PIVOT OUT OF CHANNEL.**
4) KEEP AREA UNDER SCREENINGS TRANSPORT SCREW FREE FROM FIXED OBSTRUCTIONS SUCH AS ELECTRICAL CONDUIT, PIPING, ETC. TO PERMIT ROTATION OF THE SCREEN OF THE CHANNEL FOR SERVICE.

LAKESIDE EQUIPMENT CORPORATION — Water Purification Since 1918

PROJECT	Newburgh IN
TITLE	MODEL 71FS-0.250-139 RAPTOR® FINE SCREEN PROPOSAL
WEIGHT:	N/A
INVENTORY No.	
DRAWN: EP	DATE: 4/1/2025
SIZE: D	PART No. D130117-S
CHECKED	DATE
SCALE	SHEET 1 OF 1
DRAWING No.	

COPYRIGHT ©2025 LAKESIDE EQUIPMENT CORPORATION

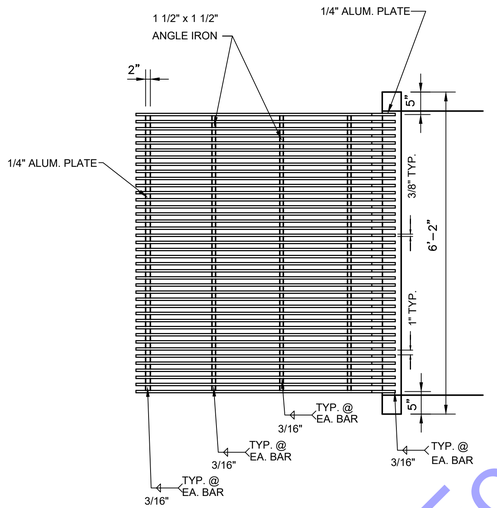

BAR RACK PLAN

NO SCALE

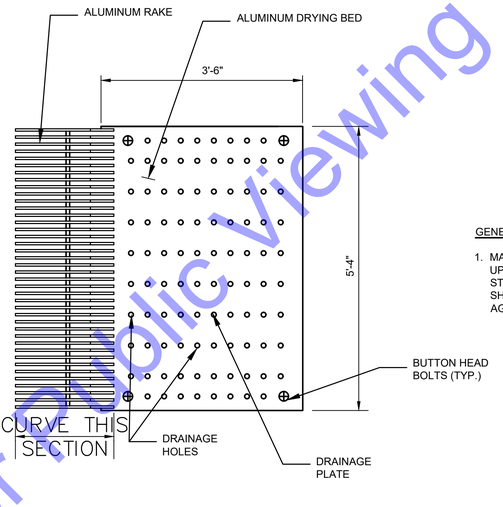

DRAINAGE PLATE DETAIL

NO SCALE

GENERAL NOTE:

1. MANUAL BAR SCREEN SHALL BE MADE UP OF ALL ALUMINUM AND STAINLESS STEEL COMPONENTS. PROVISIONS SHOULD BE MADE TO PROTECT AGAINST DISSIMILAR METALS.

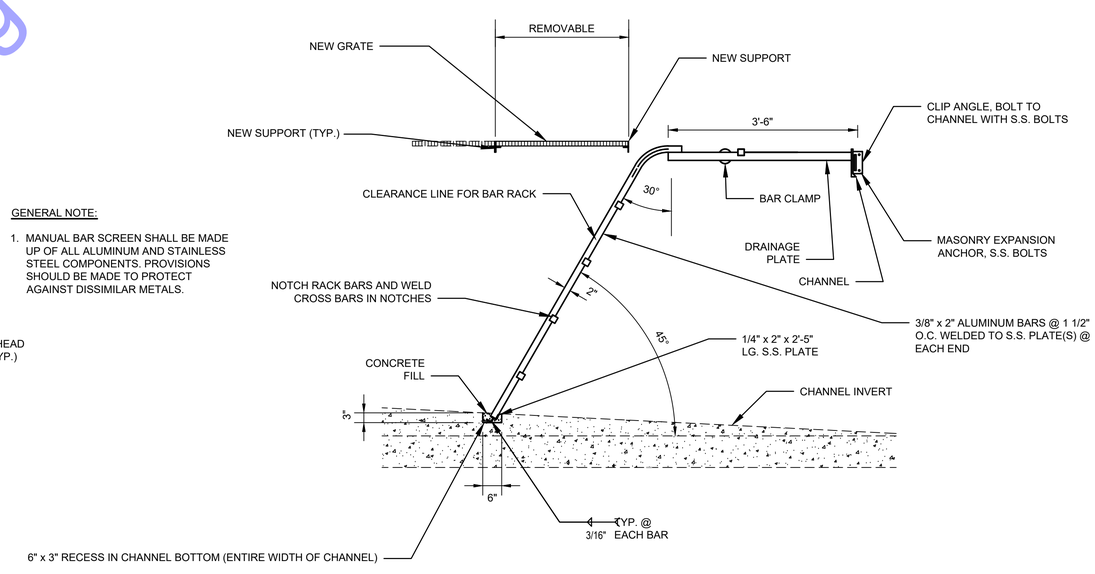

BAR RACK DETAIL

NO SCALE

For Public Viewing Only-Not For Downloading

COMMONWEALTH ENGINEERS, INC.
A wealth of resources to master a common goal.
https://commonwealthengineers.com/

RUDOLPH J. NOVITCH
REGISTERED
No. PE19400077
INDIANA PROFESSIONAL ENGINEER

Signature 10/03/2025 Date

TOWN OF NEWBURGH
WARRICK COUNTY, INDIANA

WASTEWATER TREATMENT
PLANT FLOW EQ BASIN

© 2025 BY COMMONWEALTH ENGINEERS, INC. ALL RIGHTS RESERVED. REPRODUCTION BY ANY METHOD, IN WHOLE OR IN PART WITHOUT PERMISSION IS PROHIBITED

Know what's below. 811 before you dig.
1-800-382-5544
(ITS THE LAW)

No.	Submittal / Revision	By	Date

Designed By:	Drawn By:	Checked By:
DOF	DMJ	ETP
Issue Date: 10/03/25	Project No: S18005-041	Scale: AS SHOWN

MISCELLANEOUS DETAILS X

Drawing No:
MD10
Sheet: 78 OF 161

File: Z:\SHARED\IN CLIENTS M-Z\NEWBURGH\S18005 ON CALL SEWER ENG SVCS\041 WWTP FLOW EQ BASIN\06 CADA CURRENT FILES\1 DRAWINGS\07-EC & MISC DETAILS - NEWBURGH EQ.DWG
Saved: 10/2/2025 12:02:04 PM Plotted: 10/2/2025 2:11:23 PM Current User: Drew Jenkins LastSavedBy: djenkins

GATE SCHEDULE

LOCATION	SYMBOL	GATE TYPE	HEIGHT	WIDTH	MATERIAL	MOUNTING TYPE	LIFT TYPE	STATUS	PIPE EXIT: WALL SLEEVE OR WALL PIPE	NUMBER OF GATES	COMMENTS
HYDROGEN SULFIDE FACILITY	WP-H2S-INF-GATE-001 TO WP-H2S-INF-GATE-004	SLIDE (SELF CONTAINED)	48"	48"	SS316L	FACE MOUNTED	ELECTRIC ACTUATOR YOKE MOUNTED AND NUT DRIVER ATTACHMENT	AUTOMATIC	N/A	4	ANCHORED AND GROUTED TO THE WALL FACE. GROUTING TO CONTINUE FROM THE FLOOR ABOVE THE BOTTOM OF THE GATE. 001 AND 002 ENTER CHAMBER 1. 003 AND 004 ENTER CHAMBER 2.
HYDROGEN SULFIDE FACILITY	WP-H2S-EFF-GATE-001 & WP-H2S-EFF-GATE-002	SLIDE (NON-SELF CONTAINED)	48"	48"	SS316L	FACE MOUNTED	ELECTRIC ACTUATOR PEDESTAL MOUNTED AND NUT DRIVER ATTACHMENT	AUTOMATIC	WALL PIPE	2	ANCHORED AND GROUTED TO THE WALL FACE.GROUTING TO CONTINUE FROM THE FLOOR ABOVE THE BOTTOM OF THE GATE. 001 CONTROLS CHAMBER 1. 002 CONTROLS CHAMBER 2.
HEADWORKS	WP-H-INF-GATE-001 WP-H-EFF-GATE-001 WP-H-INF-GATE-002 WP-H-EFF-GATE-002 WP-H-EQ-GATE-001	SLIDE (SELF CONTAINED)	46"	74"	SS316L	FACE MOUNTED	MANUAL, HANDWHEEL > 18" w/ STEM GUIDES AND NUT DRIVER ATTACHMENT	MANUAL	N/A	5	ANCHORED AND GROUTED TO THE WALL FACE. GROUTING TO CONTINUE FROM THE FLOOR ABOVE THE BOTTOM OF THE GATE.

VALVE & FLOW METER SCHEDULE

TAG#	SIZE (IN)	TYPE	FITTING	SERVICE	OPERATOR	OPENING MECHANISM	OPERATING PRESSURE (PSI)	LOCATION	NOTES
EP-LS2-E-PV-001	24"	PLUG VALVE	FLANGE	LS#2 FM UPSTREAM OF EAST WWTP HEADWORKS	SCADA CONNECTION	MOTOR ACTUATED WITH HANDWHEEL	250	LS#2 FORCE MAIN VAULT	TO BE OPEN UNDER NORMAL EAST PLANT OPERATIONS
EP-LS2-W-PV-001	24"	PLUG VALVE	FLANGE	LS#2 FM UPSTREAM OF WEST WWTP HEADWORKS	SCADA CONNECTION	MOTOR ACTUATED WITH HANDWHEEL	250	LS#2 FORCE MAIN VAULT	TO BE OPEN WHEN EQ BASIN IS IN OPERATION
EP-LS3-E-PV-001	24"	PLUG VALVE	FLANGE	LS#3 FM UPSTREAM OF EAST WWTP HEADWORKS	SCADA CONNECTION	MOTOR ACTUATED WITH HANDWHEEL	250	LS#3 FORCE MAIN VAULT	TO BE OPEN UNDER NORMAL EAST PLANT OPERATIONS
EP-LS3-W-PV-001	24"	PLUG VALVE	FLANGE	LS#3 FM UPSTREAM OF WEST WWTP HEADWORKS	SCADA CONNECTION	MOTOR ACTUATED WITH HANDWHEEL	250	LS#3 FORCE MAIN VAULT	TO BE OPEN WHEN EQ BASIN IS IN OPERATION
WP-EQ-EFF-PV-001	24"	PLUG VALVE	FLANGE	DOWNSTREAM OF EQ BASIN	SCADA CONNECTION	MOTOR ACTUATED WITH HANDWHEEL	250	EQ DRAIN LINE	TO BE ACTUATED BASED ON FLOW ENTERING LS#3 FROM WWTP-FM-001. ACTUATED SO AS NOT TO OVERFLOW LS#3.
WP-EQ-EFF-PV-002	24"	PLUG VALVE	FLANGE	DOWNSTREAM OF EQ BASIN	MANUAL	HANDWHEEL	250	EQ DRAIN LINE	TO BE USED BY UTILITY IF WWTP-EQ-EFF-001 IS UNABLE TO BE CLOSED
WP-H2S-INF-PV-001 WP-H2S-INF-PV-002 WP-H2S-CHA-PV-001 WP-H2S-CHA-PV-002 WP-H2S-PIPE-PV-001 WP-H2S-PIPE-PV-002 FOR MA1: WP-H-LS2-PV-001 WP-H-LS3-PV-001	12"	PLUG VALVE	FLANGE	H2S REMOVAL FACILITY DRAIN LINE	MANUAL	STEM EXTENSION WITH VALVE BOX AND T-WRENCH	250	H2S REMOVAL FACILITY DRAIN LINE	VALVES TO BE OPEN TO DRAIN H2S REMOVAL FACILITIES AND FORCE MAINS AFTER USE. QUANTITY SIX. TWO ON 42", TWO ON INFLUENT FORCE MAINS, AND TWO ON SUMP PUMPS. IF MA1: IS SELECTED, WP-H2S-INF-PV-001 AND WP-H2S-INF-PV-002 SHALL BE UTILIZED FOR WP-H-LS2-PV-001 AND WP-H-LS3-PV-001.
WP-LS2-FM-001	24"	ELECTROMAGNETIC FLOW METER	FLANGE	LS#2 FORCE MAIN	N/A	SCADA	N/A	LS#2 FLOW METER	TO MEASURE FLOW FOR LS#2 FM TO THE WEST WWTP. IF MA:1 IS SELECTED, THIS SHALL BE INSTALLED INSIDE THE HEADWORKS AS AN ULTRASONIC CLAMP ON METER.
WP-LS3-FM-001	30"	ELECTROMAGNETIC FLOW METER	FLANGE	LS#3 FORCE MAIN	N/A	SCADA	N/A	LS#3 FLOW METER	TO MEASURE FLOW FOR LS#2 FM TO THE WEST WWTP. IF MA:1 IS SELECTED, THIS SHALL BE INSTALLED INSIDE THE HEADWORKS AS AN ULTRASONIC CLAMP ON METER.
EP-WWTP-FM-001	N/A	LASER DOPPLER VELOCITY METER	MOUNTED IN MANHOLE	LS#3 FORCE MAIN	N/A	SCADA	N/A	MANHOLE DOWNSTREAM OF EQ BASIN, POINTED AT UPSTREAM SEWER	TO MEASURE EFFLUENT FLOW FROM THE EQ BASIN AND WEST HEADWORKS
WP-H2S-TV-001 WP-H2S-TV-002	8"	TELESCOPING VALVE	N/A	H2S REMOVAL FACILITY CHAMBER 1 AND CHAMBER 2	MANUAL	HANDWHEEL WITH NUT DRIVER ATTACHMENT	N/A	H2S REMOVAL FACILITY CHAMBER 1 AND CHAMBER 2	TO BE OPERATED BY THE UTILITY TO CONTROL AND SKIM SCUM BUILDUP IN THE H2S REMOVAL FACILITY

For Public Viewing Only-Not For Downloading

File: Z:\SHARED\IN CLIENTS M-Z\NEWBURGH\S18005 ON CALL SEWER ENG SVCS\041 WWTP FLOW EQ BASIN\06 CADA CURRENT FILES\1 DRAWINGS\07-EC & MISC DETAILS - NEWBURGH EQ.DWG
Saved: 10/2/2025 12:02:04 PM Plotted: 10/2/2025 2:11:25 PM Current User: Drew Jenkins LastSavedBy: djenkins

COMMONWEALTH ENGINEERS, INC.
A wealth of resources to master a common goal.
https://commonwealthengineers.com/

RUDOLPH J. NOTTICH
REGISTERED
No. PE19400077
INDIANA
PROFESSIONAL ENGINEER

Signature 10/03/2025 Date

TOWN OF NEWBURGH
WARRICK COUNTY, INDIANA

WASTEWATER TREATMENT PLANT FLOW EQ BASIN

© 2025 BY COMMONWEALTH ENGINEERS, INC. ALL RIGHTS RESERVED. REPRODUCTION BY ANY METHOD, IN WHOLE OR IN PART WITHOUT PERMISSION IS PROHIBITED

Indiana 811 Know what's below. 811 before you dig. 1-800-382-5544 (ITS THE LAW)

No.	Submittal / Revision	By	Date

Designed By:	Drawn By:	Checked By:
DOF	DMJ	ETP
Issue Date: 10/03/25	Project No: S18005-041	Scale: AS SHOWN

MISCELLANEOUS DETAILS XI

Drawing No:
MD11
Sheet: 79 OF 161

GENERAL

1. The structure has been designed for the in-service loads only. The methods, procedures, and sequences of construction are the responsibility of the Contractor. Supporting formwork for the concrete construction shall not be removed before the concrete has gained sufficient strength to safely support the dead and superimposed loads which will be subsequently applied. The Contractor shall take all necessary precautions to maintain and ensure the integrity of the structure at all stages of construction.
2. All work shall be performed in accordance with the Indiana Building Code, 2014 Edition (2012 International Building Code, first printing, with Indiana Amendments).
3. Where new work is to be fitted to old work, the Contractor shall check all dimensions and conditions in the field, and report any errors or discrepancies to the Structural Engineer prior to the fabrication and erection of any new members.
4. Do not determine dimensions by "scaling" off the plans. The Contractor shall accept all risk associated with "scaling" and shall be responsible for all inadequate work resulting therefrom. Questions regarding missing or conflicting dimensions shall be directed, in writing, to the Structural Engineer.
5. Existing materials to be removed and reinstalled as part of this contract, but become damaged, shall be replaced with approved new material of equivalent quality and appearance at the Contractor's expense.
6. All work shall be performed without damage to adjacent retained work. Adequate protection of areas nearby work against dust, dirt and debris accumulation shall be maintained at all times.
7. Principal openings in the structure are indicated on the structural drawings. Refer to the architectural, mechanical, electrical, and plumbing drawings for sleeves, curbs, inserts, etc. not herein indicated. Openings in slabs with a maximum side dimension or diameter of 10 inches or less shall not require additional framing or reinforcement, unless noted otherwise. The location of sleeves or openings not shown in structural members shall be approved by the Structural Engineer.
8. The location of sleeves or openings not shown in structural members shall be approved by the Structural Engineer.
9. The Contractor shall relocate all mechanical piping, ducts, equipment, electrical conduits, wiring and plumbing that interfere with the proposed construction. Service shall be maintained to all equipment that is served by mechanical, electrical or plumbing conduit being relocated.
10. The Contractor shall relocate all utilities which interfere with the proposed construction. Service shall be maintained at all times during utility relocation unless otherwise noted.

FOUNDATIONS

1. Exterior footings shall bear 2'-0" minimum below finish grade and shall bear on undisturbed soil.
2. Foundation excavation and all other soils related work shall be performed in accordance with the geotechnical engineering report number 096477.00 prepared by SME dated March 31st, 2025 and all associated supplements.
3. Foundation and soils related work shall be performed under the direct supervision of a qualified Geotechnical Engineer.
4. Foundation excavations shall be made to plan elevations. The soil conditions beneath foundations shall then be inspected by a qualified Geotechnical Engineer. If the underlying soils are found to be unacceptable, one of the following procedures shall be followed:
   A. Remove the unacceptable soil and backfill with an engineered structural fill in accordance with the geotechnical engineering report or inspecting Geotechnical Engineer.
   B. Lower the footing to an acceptable soil. Contact the Structural Engineer for potential modifications to the foundation system.
5. Subgrade structural elements subjected to differential lateral soil pressure shall be adequately braced until the structural elements which provide lateral restraint have been placed and allowed to cure for a minimum of 7 days.
6. Excavations for spread footings, combined footings, continuous footings and/or mat foundations shall be cleaned and hand tamped to a uniform surface. Foundation excavations shall be adequately protected against detrimental change in condition from disturbance, rain, freezing, etc. Surface runoff shall not be allowed to enter the excavation.
7. Foundation conditions noted during construction, which differ from those described in the geotechnical report shall be reported to the Structural Engineer and Geotechnical Engineer before further construction is attempted.
8. Center all column and wall footings under the column or wall above unless otherwise indicated.

GROUND IMPROVEMENT SYSTEM

1. Soil supporting foundations shall be improved using Rammed Aggregate Piers (RAP) or Rigid Inclusions to provide soil characteristics as follows:
   A. Allowable Bearing Capacity: See Design information
   B. Estimated Total Long-Term Settlement: 1.0 inch maximum
   C. Estimated Differential Settlement: 0.5 inch maximum
2. The General Contractor shall coordinate all foundation and slab bearing elevations and site grading requirements with the Specialty Ground Improvement Contractor prior to commencement of Ground Improvement installation.
3. The General Contractor shall engage an Independent Testing Agency to continuously monitor the installation and required testing of the Ground Improvement System.
4. The General Contractor shall coordinate all excavations made subsequent to the Ground Improvement installation so that excavations do not encroach on the piers. Protection of the completed Ground Improvement System elements is the responsibility of the General Contractor. In the event that utility excavations are required in close proximity to the installed system, the General Contractor shall immediately contact the Ground Improvement System delegated design professional to develop construction solutions to minimize the impact on the installed piers.
5. A layer of crushed aggregate shall be placed above the improved ground and beneath the mat foundation to transfer load to the Ground Improvement System. This aggregate layer, or Load Transfer Platform (LTP), shall be designed as part of the Ground Improvement System.
6. The Specialty Ground Improvement Contractor shall prepare detailed working or shop drawings and shall submit one reproducible copy and one blue line copy to the Structural Engineer for review prior to installation. These drawings shall show the design forces, the Ground Improvement System elements, materials, locations, and all details necessary to install all parts of the work in accordance with the drawings and specifications. These shop drawings will be reviewed for design concepts only. The Ground Improvement System shall be designed by, and the shop drawings and calculations shall bear the seal and signature of, a registered professional engineer in the State of Indiana.

CONCRETE

1. Reinforced concrete has been designed in accordance with the latest editions of the Building Code Requirements for Reinforced Concrete (ACI 318) and Environmental Engineering Concrete Structures (ACI 350R) by the American Concrete Institute (ACI).
2. Slabs-on-grade shall be constructed in accordance with the latest edition of the Guide for Concrete Floor and Slab Construction (ACI 302.1R).
3. Mixing, transporting, and placing of concrete shall conform to the latest edition of the Standard Practice for Selecting Proportions for Normal, Heavyweight, and Mass Concrete (ACI 211.1) and the Standard Specifications for Structural Concrete (ACI 301). The special provisions of ACI 211.1 Appendix 5 (Mass Concrete Mix Proportioning) shall be used in proportioning the concrete mixture for the mat foundation to control temperature rise during hydration. In addition, the provisions of ACI 207.1R (Mass Concrete) shall apply. Concrete curing shall conform to the latest editions of the Standard Practice for Concrete Curing (ACI 308) and the Standard Specification for Curing Concrete (ACI 308.1). In case of a discrepancy, the plans and specifications shall govern.
4. Unless noted otherwise, concrete shall have natural sand fine aggregate and normal weight coarse aggregates conforming to ASTM C33, and Type I or III Portland Cement conforming to ASTM C150. Type III Portland Cement shall not be used in mass concrete. The Contractor shall submit a mix design for each proposed class of concrete. Mix designs shall indicate proportions by weight, water-cement ratio, slump, air content, synthetic fiber size and quantity, sieve analyses of fine and coarse aggregates, standard deviation analysis, and required average strength and documentation of average strength verifying compliance with ACI 318. The Contractor shall not vary from the mix design without approval from the Structural Engineer.
5. Unless noted otherwise, fly ash may be used as a pozzolan to replace a portion of the Portland Cement in a concrete mix. Fly ash, when used, shall conform to ASTM C618, Type C (except in mass concrete, ASTM C618, Type F shall be used). Concrete mixes using fly ash shall be proportioned to account for the properties of the specific fly ash used and to account for the specific properties of the fly ash concrete thus resulting. The ratio of the amount of the fly ash to the total amount of fly ash plus cement in the mix shall not exceed 25 percent.
6. For mass concrete, ground granulated blast-furnace slag (GGBFS) may be used to replace a portion of the Type I Portland Cement in a concrete mix. Ground granulated blast-furnace slag, when used, shall conform to ASTM C989, Grade 100. Concrete mixes using GGBFS shall be proportioned to account for the properties of the specific GGBFS used and to account for the specific properties of the GGBFS concrete thus resulting. The ratio of the amount of the GGBFS to the total amount of GGBFS plus cement in the mix shall be between 65 and 70 percent (except for concrete exposed to deicing chemicals the maximum ratio shall be 50 percent).
7. Water-reducing admixtures conforming to ASTM C494 may be used in the concrete mix design. Maximum slump shall be 5 inches for mixes containing water-reducing admixtures and 5 to 8 inches for mixes containing high range water-reducing admixtures.
8. Concrete compressive strength tests shall be performed in accordance with ASTM C39. Copies of the test results shall be forwarded to the Structural Engineer. One set of specimens shall be taken for each day's pour of appreciable size and for each 50 cubic yards (100 cubic yards for mass concrete) in accordance with the latest edition of ASTM C31. Each set shall include one specimen tested at 7 days, 2 specimens tested at 28 days and one specimen retained in reserve. Two additional reserve specimens shall be retained for all mass concrete pours. These test cylinders shall be laboratory cured. For mass concrete pours, these test cylinders shall remain on-site for 48 hours before being transported to the testing lab.
9. When the ambient temperature is expected to fall below 40 degrees during the course of a concrete pour or subsequent curing period, it shall be placed and cured in accordance with the latest edition of Cold Weather Concreting (ACI 306R) and an additional set of concrete test cylinders shall be made. For mass concrete, this set of additional test cylinders shall consist of four specimens for each 200 cubic yards of concrete placed. These cylinders shall be stored immediately adjacent to, and cured under the same conditions as the building concrete. Special curing boxes are not permitted for these test cylinders.
10. Concrete mixed, transported, placed, and cured under conditions of high ambient temperature, low humidity, solar radiation, or high winds shall conform to the latest edition of Hot Weather Concreting (ACI 305R) and an additional set of concrete test cylinders shall be made. For mass concrete, this set of additional test cylinders shall consist of four specimens for each 200 cubic yards of concrete placed. These cylinders shall be stored immediately adjacent to, and cured under the same conditions as the building concrete. Special curing boxes are not permitted for these test cylinders.
11. Slump tests shall be made prior to and following the addition of plasticizers. Where concrete is placed by pumping methods, concrete for test cylinders and slump tests shall be taken at the point of final placement.
12. Water shall not be added to the concrete at the job site. The Contractor is responsible for coordinating a pumpable and workable mix without the addition of water at the job site. The use of plasticizers, retardants and other additives shall be at the option of the Contractor subject to the approval of the Structural Engineer. Follow the recommendations of the manufacturer for the proper use of additives. Use of calcium chloride or other chloride bearing salts is prohibited.
13. Place concrete in a manner so as to prevent segregation of the mix. Delay floating and trowelling operations until the concrete has lost surface water sheen or all free water. Do not sprinkle free cement on the slab surface. Finishing of slab surfaces shall conform to the latest editions of ACI 302.1R and ACI 304R (Guide for Measuring, Mixing, Transporting and Placing Concrete).
14. Where an epoxy adhesive is specified for bonding plastic concrete to hardened concrete, it shall conform to the latest edition of the Standard Specification for Bonding Plastic Concrete to Hardened Concrete with a Multi-Component Epoxy Adhesive (ACI 503.2).
15. Maintain concrete in a moist condition for at least 5 days at ambient temperatures above 70 degrees, and at least 7 days at ambient temperatures above 50 degrees. Curing compounds or moisture retention covers shall be used for all non-formed surfaces. Formed surfaces shall be cured by leaving forms in place. During hot, dry weather, keep forms moist by sprinkling. When forms are removed prior to the end of the curing period, apply curing compound to the exposed surfaces.
16. All interior slabs shall receive a hard "troweled finish". Exterior slabs, sidewalks, and stoops shall receive a "broom (or other type of slip resistant) finish". All formed surfaces not exposed to public view shall receive a "rough form finish", exposed surfaces shall receive a "smooth form finish". Concrete finishes shall be as defined in ACI 301.
17. Protect finished concrete surfaces from damage, rain, hail, running water, other injurious effects.
18. Protect the concrete surface between finishing operations on hot, dry days or any time plastic shrinkage cracks could develop by using wet burlap, plastic membranes or fogging.
19. Horizontal and vertical joints are not permitted in concrete construction except where indicated.
20. Construction joints and/or contraction joints at locations other than where indicated shall be submitted to the Structural Engineer for approval.
21. Construction joints shall be prepared by roughening the contact surface in an approved manner to a full amplitude of approximately 1/4 inch leaving the contact surface clean and free of laitance.
22. Control joints shall be made in concrete slabs-on-grade at major column centerlines, at points of discontinuity, at reentrant corners, and at other locations shown on the plans.
23. Provide 3/4 inch chamfers on all exposed corners of concrete except those abutting masonry.
24. The Contractor shall verify the location of sleeves, openings, embedded items, etc. and shall ensure that they are in place prior to the placement of the concrete.
25. Earth cuts shall not be used as forms ("bank forming") for vertical or sloping surfaces unless otherwise approved by the Structural Engineer. Where bank forming is permitted, the concrete element shall be increased at least 3 inches on all sides exposed to earth to account for possible soil contamination during concrete placement.

CONCRETE SCHEDULE

CONCRETE SCHEDULE

CLASS	f'_c	AIR CONTENT	MIN. CEMENT: LB/CY (SACKS/CY)	MAX. WATER/ CEMENT: RATIO	CONCRETE PLACEMENT	REMARKS
A	3,000 psi	optional	423 (4.5)	0.58	footings, grade beams	
B	4,000 psi	optional	517 (5.5)	0.48	mat foundation	crystalline waterproofing admixture
C	4,500 psi	6% ± 1.5%	611 (6.5)	0.45	pedestals, foundation walls	crystalline waterproofing admixture
D	4,000 psi	optional	517 (5.5)	0.48	interior slabs-on-grade	synthetic fibers (1.5 lbs/cys)
E	4,500 psi	6% ± 1.5%	611 (6.5)	0.45	retaining walls, tank structural elevated slabs, columns, beams, walls	crystalline waterproofing admixture
F	4,500 psi	6% ± 1.5%	611 (6.5)	0.40	exterior slabs-on-grade, stoops, curbs, & sidewalks exposed to de-icers	synthetic fibers (1.5 lbs/cys)

PRECAST/PRESTRESSED CONCRETE

1. Precast/prestressed concrete members shall be designed, detailed, fabricated and erected in accordance with the latest editions of the Building Code Requirements for Reinforced Concrete (ACI 318) by the American Concrete Institute and the PCI Design Handbook for Precast Prestressed Concrete by the Prestressed Concrete Institute (PCI).
2. Penetrations are not permitted in precast/prestressed members except where indicated. Inserts and sleeves shall be cast-in-place. Core drilling of precast/prestressed concrete is not permitted.
3. Conduit within precast/prestressed members is not permitted.
4. Grout or concrete containing chlorides shall not be used.
5. The precast/prestressed concrete manufacturer shall prepare detailed working or shop drawings to enable fabrication, erection and construction of all parts of the work in accordance with the drawings and specifications and shall submit one reproducible copy and one blue line copy to the Structural Engineer for review prior to fabrication. These shop drawings shall show the design loads, plans, elevations, sections, connections, tendon layout, dead end and stressing end locations, tendon support layouts with details necessary for installation, attachments to other work, and details necessary for the precast/prestressed concrete manufacturer to fabricate, erect and construct all parts of the work. These shop drawings will be reviewed for design concepts only. The precast/prestressed concrete manufacturer shall be responsible for all dimensions, accuracy, and fit of work. The precast/prestressed concrete framing shall be designed by, and the shop drawings and calculations shall bear the seal and signature of, a registered professional engineer in the State of Indiana.

REINFORCING STEEL

1. Reinforcing bar detailing, fabricating, and placing shall conform to the latest edition of the following standards: Specifications for Structural Concrete for Buildings (ACI 301), ACI Detailing Manual (SP66). The latest editions of Concrete Reinforcing Steel Institute's Reinforcing Bar Detailing and Placing Reinforcing Bars may also be used.
2. Provide standard bar chairs, slab bolsters, spacers, etc. as required to maintain concrete protection specified. Reinforcing steel shall be tied to prevent displacement during concrete placement.
3. Reinforcement bars shall not be tack welded, welded, heated or cut unless otherwise indicated or approved by the Structural Engineer.
4. Welding of reinforcement bars, when approved by the Structural Engineer, shall conform to the latest edition of American Welding Society Standard D1.4. Electrodes for shop and field welding of reinforcement bars shall conform to ASTM A233, Class E90XX.
5. Synthetic fibers shall be used for temperature and shrinkage reinforcement in concrete slabs-on-grade. Synthetic fibers shall be virgin (non-recycled) nylon or polypropylene fibers conforming to ASTM C1116, Type III. Fibers shall be introduced into the mix at the plant in accordance with the manufacturer's recommendations. The Contractor shall submit the mix design, including the fiber size and quantity, to the Structural Engineer for approval prior to construction. The Contractor shall take adequate measures to manage any difficulty in concrete finishing associated with the use of the fibers.
6. Concrete cover over reinforcement, unless otherwise noted, shall be as specified in the latest editions of ACI 318 and ACI 350 with the most stringent requirements governing.
7. Unless noted otherwise, splicing of reinforcing bars shall conform to the latest edition of ACI 318. Where the length of lap is not indicated, provide a Class "B" lap at tension splices or 30 bar diameter compression laps at compression splices. If the splice type is not defined as tension or compression, provide the splice type that produces the greatest length.

CONCRETE REINFORCING STEEL LAP SPLICE SCHEDULE

BAR SIZE	TENSION SPLICE		COMPRESSION SPLICE
	TOP BAR	OTHER	
#3	21"	16"	12"
#4	28"	24"	15"
#5	35"	30"	19"
#6	42"	36"	23"
#7	49"	42"	26"
#8	56"	48"	30"
#9	63"	57"	34"
#10	76"	66"	38"
#11	93"	72"	42"

8. Horizontal bars in walls, masonry bond beams, and continuous wall footings shall be bent at corners and intersections in such a way that continuity is provided through the joint. Separate corner bars of the same size and spacing as the horizontal reinforcing may be substituted for the bent portion of the continuous bars.
9. Unless noted otherwise, provide 2-#5 bars (one each face) around unframed openings and diagonally at reentrant corners of vertical height offsets in concrete walls. Place bars parallel to the sides of the opening and extend 24 inches beyond corners.
10. The Contractor shall prepare detailed working or shop drawings to enable him to fabricate, erect and construct all parts of the work in accordance with the drawings and specifications and shall submit one reproducible copy and one blue line copy to the Structural Engineer for review prior to fabrication. These shop drawings will be reviewed for design concepts only. The Contractor shall be responsible for all dimensions, accuracy, and fit of work.

MASONRY

1. Engineered concrete masonry has been designed in accordance with the latest edition of the ACI Building Code Requirements for Masonry Structures (ACI 530/ASCE 5).
2. Concrete masonry construction shall conform to the latest edition of the ACI Specifications for Masonry Structures (ACI 530.1/ASCE 6).
3. Mortar shall be type N for interior non-load bearing walls. For exterior and load bearing walls, mortar shall be type M below grade and type S above grade. Mortar shall conform to the requirements of the latest edition of ASTM C270. Portland Cement-lime without air entrainment shall be used in the mortar mix.
4. Provide standard spacers, etc. as required to prevent reinforcing steel displacement during grout placement.
5. Provide reinforcing steel in vertical cores as indicated. In addition, provide reinforcing steel in vertical cores on each side of all openings and each corner of all walls. Grout cores with reinforcing steel solid.
6. Reinforcing steel lap splices in concrete masonry shall be as indicated in the following table. All splices shall be wired together.

MASONRY REINFORCING STEEL LAP SPLICE SCHEDULE

f'm = 2,000 psi

BAR SIZE	#3	#4	#5	#6	#7	
8" CMU	1'-1"	2'-0"	3'-0"	4'-6"	5'-3"	
12" CMU	1'-1"	1'-10"	2'-10"	5'-4"	7'-3"	

7. Masonry cores (where specified) and bond beams shall be filled with coarse grout conforming to the requirements of the latest edition of ASTM C476 and having a minimum 28-day compressive strength of 3,000 psi, 3/4 inch maximum aggregate, and an 8 to 11 inch maximum slump.
8. Bearings for beams, lintels, joists, etc. shall be bond beams or hollow masonry units with cores filled solid with grout. The minimum bearing length shall be 8 inches unless otherwise indicated.
9. The Contractor shall prepare detailed working or shop drawings to enable him to fabricate, erect and construct all parts of the work in accordance with the drawings and specifications and shall submit one reproducible copy and one blue line copy to the Structural Engineer for review prior to fabrication. These shop drawings will be reviewed for design concepts only. The Contractor shall be responsible for all dimensions, accuracy, and fit of work.

STRUCTURAL STEEL

1. Structural steel detailing, fabrication and erection shall conform to the latest editions of the AISC Specification for Structural Steel Buildings, Allowable Stress Design and Plastic Design, and the AISC Code of Standard Practice for Steel Buildings and Bridges.
2. Erector shall maintain minimum temporary bracing at each bay in each direction until the roof diaphragm and permanent lateral load resisting system construction are complete.
3. Structural steel shall be hot-dip galvanized (G90 finish). All abrasions caused by handling after shop painting shall be touched-up after erection is complete.
4. Design connections not shown in accordance with the latest AISC Specification and Manual of Steel Construction (allowable stress design method). Design simple span non-composite beam connections not shown to support one-half the beam load capacity as given in the AISC Uniform Load Constants for Beams Laterally Supported tables. Connection angles shall be double web angles, 5/16" minimum thickness.
5. Unless otherwise noted, bolted connections for structural steel members shall be bearing-type using 3/4" diameter ASTM A325 high strength bolts with standard 13/16" diameter holes tightened to the snug tight condition. Bolted wind brace connections shall be slip-critical-type (SC) using 3/4" diameter ASTM A325 high strength bolts with oversized 15/16" diameter holes tightened using the turn-of-nut method unless noted otherwise.
6. High strength bolted connections shall conform to the latest edition of the Specification for Structural Joints Using ASTM A325 or A490 Bolts, approved by the Research Council on Structural Connections of the Engineering Foundation. Faying surfaces of slip-critical-type (SC) connections shall meet the minimum requirements for a Class A surface condition (mean slip coefficient not less than 0.33).
7. Welding procedures shall conform to the latest edition of the American Welding Society's (AWS) Structural Welding Codes for: Steel ANSI/AWS D1.1 and Sheet Steel ANSI/AWS D1.3, and Reinforcing Steel ANSI/AWS D1.4.
8. Welded connections using ASTM A572 and A992 steel as a base metal shall be made with E70XX Low Hydrogen electrodes. Unless otherwise noted, other welded connections shall be made with regular E70XX electrodes. Welding shall be performed only where shown and to the extent indicated.
9. Field drilled holes shall be reamed, cleaned and deburred prior to assembly of the connection.
10. Thermal cutting shall preferably be done by machine. Hand thermally cut edges which will be subjected to substantial stress, or which are to have weld metal deposited on them, shall be reasonably free from notches or gouges. Notches or gouges greater than 3/16" that remain from cutting shall be removed by grinding. Re-entrant corners shall be shaped notch-free to a radius of at least 1/2".
11. Paint on surfaces adjacent to joints to be field welded shall be wire brushed to reduce the paint film to a minimum.
12. Surfaces within 2" of any field weld shall be free of materials that would prevent proper welding or produce toxic fumes while welding is being done.
13. Splicing of structural steel members where not detailed is prohibited without the prior approval of the Structural Engineer as to location, type of splice and connection to be made.
14. Beams with specified camber shall be cambered upward. Beams without specified camber shall be fabricated so that after erection any minor camber due to rolling or shop assembly is upward.
15. The minimum bearing length for all steel beams bearing on concrete or masonry shall be 8" for spans 8'-0" or less and 1'-4" for spans greater than 8'-0".
16. Unless otherwise noted, provide a 5/8" thick steel bearing plate with two 1/2" diameter x 0'-6" stud anchors at the ends of steel beams bearing on concrete or masonry supports.
17. Continuous beam cantilevers and other beams framing over the top of a column shall have a full height 3/8" web stiffener on each side of the beam, centered above the supporting column. The beam-to-column connection shall contain no less than 4 bolts (2 each side of beam).
18. The Contractor shall prepare detailed working or shop drawings to enable him to fabricate, erect and construct all parts of the work in accordance with the drawings and specifications and shall submit one reproducible copy and one blue line copy to the Structural Engineer for review prior to fabrication. These shop drawings will be reviewed for design concepts only. The Contractor shall be responsible for all dimensions, accuracy, and fit of work.

For Public Viewing Only
Not for Download

COMMONWEALTH ENGINEERS, INC.
A MEMBER OF FIRMS DEDICATED TO CHANGE & CONTINUOUS GROWTH
https://commonwealthengineers.com/

MATTHEW R. MURRAY
REGISTERED
PE11500002
STATE OF INDIANA
PROFESSIONAL ENGINEER
Matt Murray 10/03/2025
Signature Date

CE Solutions
structural engineers
2020 Hamilton Ave, Suite 300
Fishers, IN 46038
cesolutionsllc.com

TOWN OF NEWBURGH
WARRICK COUNTY, INDIANA

WASTEWATER TREATMENT
PLANT FLOW EQ BASIN

© 2025 BY COMMONWEALTH ENGINEERS, INC. ALL RIGHTS RESERVED. NO REPRODUCTION BY ANY METHOD IN WHOLE OR IN PART WITHOUT PERMISSION IS PROHIBITED

Indiana811 Know what's below. Call before you dig. 1-800-382-5544 (ITS THE LAW)

No.	Submittal / Revision	By	Date

Designed By:	Drawn By:	Checked By:
MRM	RMS	MRM
Issue Date:	Project No:	Scale:
10/03/2025	25-107	NO SCALE

GENERAL STRUCTURAL NOTES

Drawing No:
S0-1
Sheet: 80 OF 161

Saved: 10/2/2025 5:21:59 PM Current Local File: Autodesk Docs://Newburgh New WWTP EQ and Headworks/25-107_S0 GENERAL NOTES_v23.rvt

POST-INSTALLED EXPANSION/ADHESIVE ANCHORS

1. Post-installed anchors shall only be used where specified on the Construction Documents. The Contractor shall obtain approval from the Structural Engineer prior to installing the post-installed anchors in place of missing or misplaced cast-in-placed anchors.
2. Care shall be taken in placing post-installed anchors to avoid conflicts with existing reinforcing steel.
3. Post-installed anchors shall be installed by qualified personnel in accordance with the drawings and specifications.
4. Post-installed anchors shall be installed by qualified personnel in accordance with the Manufacturer's Printed Installation Instructions (MPII), the drawings and specifications. Installation of adhesive anchors shall be performed by personnel trained to install adhesive anchors. Contractor shall submit installer training cards with anchor package.
5. Post-installed anchors shall be HILTI type as manufactured by HILTI Fastening Systems or approved equivalent. Substitution requests must be submitted by the Contractor to the Structural Engineer for review. Provide back-up technical data that demonstrates that the substituted product is capable of achieving the equivalent performance values (minimum) of the specified products using the appropriate design procedure and/or standard(s) as required by the building code.
6. Masonry cores receiving post-installed anchors shall be filled with course grout. Grout must comply with IBC Section 2103.12 or IRC Section R609.1.1, as applicable. Alternatively, the grout must have a minimum compressive strength, when tested in accordance with ASTM C1019, equal to its specified strength, but not less than 2,000 psi. Post-installed anchors shall not be installed in masonry mortar joints.
7. The Contractor shall inspect the masonry or concrete surface at each proposed post-installed anchor location prior to installation. If the anchor locations align with mortar joints or the masonry or concrete is honeycombed, cracked or otherwise unsound, the post-installed anchors shall be repositioned so as to be located in sound material and be in accordance with the manufacturer's minimum spacing and edge distance requirements.
8. Adhesive anchors shall be subject to the following additional requirements:
   A. Anchors shall meet the requirements of ACI 355.2 (mechanical anchors) and ACI 355.4 (adhesive anchors).
   B. Anchors shall not be installed in concrete cured less than 21-days
   C. Anchors shall not be installed until the concrete has reached a minimum compressive strength of 2,500 psi.
   D. Concrete temperature must be greater than 50 ˚F and less than 80 ˚F prior to installation of the anchors unless otherwise permitted by the MPII.
   E. Anchors shall be installed in holes drilled with the HILTI Hollow Drill Bit (TE-CD (SDS Plus) or TE-YD (SDS Max)) and HILTI VC 20/40 Vacuum (VC 20-U or VC 40-U). Follow the MPII for size and depth of holes required.
   F. Adhesive anchors installed in horizontal or upwardly inclined orientations to resist sustained tension loads shall be continuously inspected during installation by an inspector specially approved for that purpose by the building official. The special inspector shall furnish a report to the licensed design professional and building official that the work covered by the report has been performed and that the materials used and the installation procedures used conform to the approved contract documents and MPII.

REINFORCING STEEL EPOXY DOWEL SCHEDULE

BAR SIZE	#3	#4	#5	#6	#7	#8
STANDED EFFECTIVE EMBED, h_{ef}	3-3/8"	4-1/2"	5-5/8"	6-3/4"	7-7/8"	9"
MINIMUM EDGE DISTANCE, c_{min}	2"	2-1/2"	3-1/8"	3-3/4"	4-3/8"	5"

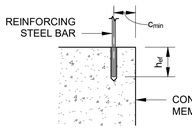

TYPICAL EPOXY DOWEL

NOTES:

1. EPOXY DOWELS SHALL UTILIZE HILTI HIT-HY 200 ADHESIVE SYSTEM OR APPROVED EQUIVALENT
2. STANDARD EMBED DEPTH AND MIN EDGE DISTANCES PROVIDED IN THIS SCHEDULE APPLY AT ALL LOCATIONS UNLESS OTHERWISE NOTED ON SECTIONS AND DETAILS.

NON-SHRINK GROUT

1. Grout shall be a high early strength, non-metallic, shrinkage resistant (when tested in accordance with the latest edition of ASTM C827 or CRD-C621), premixed, non-corrosive, non-staining product conforming to the requirements of the latest edition of ASTM C1107 and containing Portland Cement, silica sands, shrinkage compensating agents and fluidity improving compounds.
2. Grout compressive strength tests shall be performed in accordance with the latest edition of ASTM C109, with a restraining plate placed over the molds.
3. Grout shall be installed in and cured according to manufacturer's recommendations.

STRUCTURAL LUMBER

1. Structural lumber shall be detailed, fabricated and erected in accordance with the latest editions of the Timber Construction Manual by the American Institute of Timber Construction (AITC) and the National Design Specification for Wood Construction by the American Forest & Paper Association (ANSI/NFoPA NDS).
2. Bolts, lag screws, nails and other wood fastenings, unless otherwise noted, shall conform to the latest edition of the National Design Specification for Wood Construction. Standard cut washers shall be used between the wood and bolt head and the wood and nut.
3. Joist hangers and connection plates shall be as manufactured by Simpson Strong-Tie Company, Inc. or approved equivalent. Hardware used with PPT wood to be hot-dip galvanized or stainless steel. Hardware exposed to weather conditions shall be hot-dip galavanized.
4. Wood members that are in contact with concrete or masonry or exposed to weather shall be pressure treated with a water borne treatment to a net retention level of 0.3 pcf in accordance with applicable American Wood Preservers' Association latest requirements.
5. Rough sawn timbers shall be treated and finished where specified. Ends exposed to weather shall be treated with CCA.
6. Connections not specifically detailed herein shall be per Table 2304.9.1 of the 2012 International Building Code.

PLYWOOD/PERFORMANCE RATED PANELS

1. Plywood and performance rated panels (oriented strand board) shall be detailed, fabricated and erected in accordance with the latest criteria established by the American Plywood Association (APA) including their latest edition of the Plywood Design Specification (and its Supplements).
2. Plywood panels shall be identified with the appropriate trademark of the APA and shall meet the requirements of the latest edition of the U.S. Product Standard PS 1 for Construction and Industrial Plywood. Performance rated panels shall be identified with the appropriate trademark of the APA and shall meet the requirements of the latest edition of the APA PRP-108 Performance Standards and Policies for Structural-Use Panels, or the U.S. Product Standard PS 2 for Wood-Based Structural-Use Panels.
3. Roof panels shall be installed with the long dimension (face grain) across the supports with panels continuous over 2 or more supports (minimum 3 span condition).
4. Stagger panel end joints. End joints shall only occur over a support. Unless recommended otherwise by the panel manufacturer, provide a 1/8" gap between panel ends and edges. Panel edges shall be tongue-and-groove or supported on 2" (nominal) lumber blocking installed between joists. Wall panel edges shall be supported on 2" (nominal) lumber blocking installed between studs.

METAL-PLATE-CONNECTED WOOD TRUSSES

1. Prefabricated wood trusses shall be detailed, fabricated and erected in accordance with the latest editions of the Timber Construction Manual by the American Institute of Timber Construction (AITC) and the National Design Specification for Wood Construction by the American Forest & Paper Association (ANSI/NFoPA NDS) and the latest criteria established by the Truss Plate Institute (TPI) and the Wood Truss Council of America (WTCA).
2. Temporary and permanent bracing of wood trusses shall be in accordance with the latest edition of the Commentary and Recommendations for Handling, Installing and Bracing Metal Plate Connected Wood Trusses (HIB) by the TPI.
3. Wood roof trusses shall be designed to support the following superimposed loads in addition to the weight of the trusses:

Top Chord Dead Load	10 psf
Top Chord Live Load	25 psf
Bottom Chord Dead Load	15 psf
Bottom Chord Live Load	10 psf

4. Deflection due to live load shall be limited to 1/360 of the truss span. For truss cantilevers, the deflection due to live load at the end of the cantilever shall be limited to 1/180 of the cantilever dimension.
5. Truss plates shall be galvanized steel and shall be applied to both faces of the members being connected.
6. Trusses shall conform to the geometry shown. Minimum lumber size for top and bottom chord members shall be 2"x 4" (nominal). Web member size and configuration shall be the option of the fabricator.
7. The truss manufacturer shall prepare detailed working or shop drawings and shall submit one reproducible copy and one blue line copy, including calculations, to the Structural Engineer for review prior to fabrication. These drawings and calculations shall show the design forces in the truss members, the sizes of the truss plates; the lumber species, commercial grade and normal duration design values; required bracing and details necessary to enable the truss manufacturer to fabricate, erect and construct all parts of the work in accordance with the drawings and specifications. These shop drawings will be reviewed for design concepts only. The truss manufacturer shall be responsible for all dimensions, accuracy, and fit of work. The trusses shall be designed by, and the shop drawings and calculations shall bear the seal and signature of, a registered professional engineer in the State of Indiana.
8. The contractor shall install all permanent truss bracing as shown on the truss manufacturer's shop drawings.

STRUCTURAL FOAM FILL

1. Structural foam fill / rigid insulation as shown on the drawings shall be InsulFoam GF, by InsulFoam LLL Engineered EPS; Type ASTM D6817 or approved equal. Provide locations and thicknesses indicated on plans.
2. Minimum required foam properties:
   A. Foam Type: InsulFoam EPS19
   B. Density 1.15 pcf
   C. Compressive Resistance (1% deformation): 5.8 psi
   D. Compressive Resistance (10% deformation): 16.0 psi

COORDINATION WITH OTHER TRADES

1. The Contractor shall coordinate and check all dimensions relating to architectural finishes, structural framing, mechanical openings, equipment, etc. The Structural Engineer shall be notified of any discrepancies before proceeding with work in an area under question.
2. The Crane / Hoist / Monorail Track System manufacturer shall prepare detailed working or shop drawings to enable fabrication, erection, and construction of all parts of the work in accordance with the drawings and specifications and shall submit one reproducible copy and one blue line copy to the Structural Engineer for review prior to fabrication. These shop drawings shall show the design loads, plans, elevations, sections, connections, required bracing, attachments to other work, and details necessary for Crane / Hoist / Monorail Track System manufacturer to fabricate, erect and construct all parts of the work. These shop drawings will be reviewed for design concepts only. The Crane / Hoist / Monorail Track System manufacturer shall be responsible for all dimensions, accuracy, and fit of work.

SPECIAL NOTES TO THE OWNER

1. Under normal conditions and for conventional buildings structures such as the subject structure, reinforced concrete will develop cracks. The cracks are due to inherent shrinkage of the concrete, creep, ambient temperature variation, and restraining effects of vertical and other structural elements.
2. The cracks formed are normally cosmetic. The concrete maintains its serviceability and strength requirements. It is possible that a number of hairline cracks, which would normally spread over a wide area, will integrate into a single crack with a width exceeding 0.01 inch. It is emphasized that although special effort is made to reduce the potential causes and number of such cracks, it is not practical to provide total articulation and thereby achieve complete inhibition of all cracks.
3. The majority of these cracks develop within the first three years of service. Cracks which are wider than 0.01 inch may require sealing or epoxy injection.
4. The object of the joints provided in the structure is to allow movement. Movements due to creep and shrinkage may be noticeable at joints up to two years after construction, beyond which movements due to variations in temperature will persist.

DESIGN

1. Building Code: Indiana Building Code, 2014 Edition (2012 International Building Code, first printing, with Indiana Amendments).
2. Soil information:
   Allowable net bearing pressure:
   All structures unless noted otherwise — 4000 psf*
   *Foundations shall be founded on soil enhanced with Rammed Aggregate Piers (RAP) or Rigid Inclusions. All foundation excavations shall be inspected and approved by the geotechnical engineer for the bearing capacity indicated above prior to placing concrete.
   Unit weight of soil — 125 pcf (assumed)
   Equivalent fluid pressure on tank walls — 90 psf / ft (assumed)
   Coefficient of friction between soil and concrete footing — 0.30 (assumed)
3. Concrete:
   28 day compressive strength (f'c) — See Schedule
4. Masonry:
   28 day compressive strength (f'm) — 2000 psi
5. Reinforcing steel (deformed bars of new billet steel):
   Stirrup and tie — ASTM A615, Grade 60
   Weldable (Low-Alloy) — ASTM A706, Grade 60
   Otherwise — ASTM A615, Grade 60
   Welded wire fabric (smooth) — ASTM A185
6. Structural Steel:
   Structural tubing members — ASTM A500, Grade C Fy = 50 ksi
   Structural steel pipe members — ASTM A53, Type E or S, Grade B Fy = 35 ksi
   Structural steel rolled wide flange W shapes (as an alternate, ASTM A572, Grade 50 may be used) — ASTM A992 Fy = 50 ksi
   Structural steel rolled S, M, and HP shapes & channels — ASTM A36
   Structural steel rolled plates & angles — ASTM A36
   All other members — ASTM A36
   Composite beam shear connectors (cold-drawn) — ASTM A108
   Connection bolts — ASTM A325N
   Anchor bolts — ASTM A36
7. Non-shrink grout:
   28 day compressive strength — 6,500 psi
8. Live loads:
   Roof: — 25 psf with drift considerations
   Floor: — 100 psf
9. Live Load Deflection Limitation:
   Roof — L/360
10. Risk Category — III
11. Wind loads:
    Basic wind speed (3-second gust) — 120 mph
    Exposure — C
12. Seismic loads:
    Seismic importance factor, Ie — 1.25
    Mapped Spectral Response Acceleration at Short Periods, Ss — 50.4% g
    Mapped Spectral Response Acceleration at 1 Second, S1 — 18.4% g
    Site Class — D
    Design Spectral Response Acceleration at Short Periods, Sds — 46.9% g
    Design Spectral Response Acceleration at 1 Second, Sd1 — 25.3% g
    Seismic Design Category — C

For Public Viewing Only
Work In Progress Not For Construction
Do Not Use For Construction
Work In Progress Not For Bidding
Work In Progress Not For Permit
Work In Progress Not For Regulatory Review
Work In Progress Not For Download

COMMONWEALTH ENGINEERS, INC.
A MEMBER OF ABRAHAM G. COMMON GROUP
https://commonwealthengineers.com/

MATTHEW R. MURRAY
REGISTERED
PE11500002
STATE OF INDIANA
PROFESSIONAL ENGINEER
Signature — Date 10/03/2025

CE Solutions
structural engineers
2000 Duke Street, Suite 300
Florence, IN 47020
ceisolutions.com

TOWN OF NEWBURGH
WARRICK COUNTY, INDIANA

WASTEWATER TREATMENT PLANT FLOW EQ BASIN

© 2025 BY COMMONWEALTH ENGINEERS, INC. ALL RIGHTS RESERVED. REPRODUCTION BY ANY METHOD IN WHOLE OR IN PART WITHOUT PERMISSION IS PROHIBITED

Indiana811 Know what's below. 811 before you dig. 1-800-382-5544 (ITS THE LAW)

No.	Submittal / Revision	By	Date

Designed By:	Drawn By:	Checked By:
MRM	RMS	MRM
Issue Date:	Project No:	Scale:
10/03/2025	25-107	NO SCALE

GENERAL STRUCTURAL NOTES

Drawing No: **S0-2**

Sheet: 81 OF 161

Saved: 10/2/2025 5:22:00 PM Current Local File: Autodesk Docs://Newburgh New WWTP EQ and Headworks/25-107_S0 GENERAL NOTES_v23.rvt

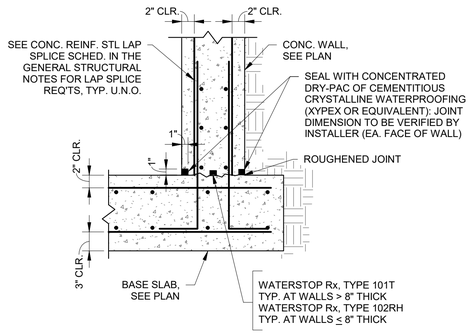

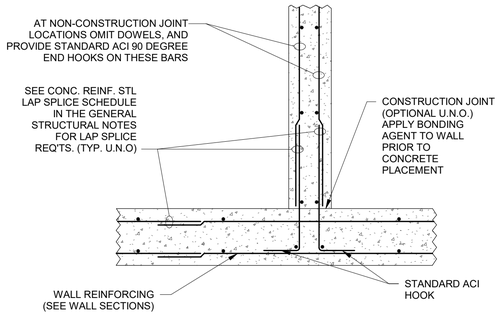

WALL REINFORCING - PLAN VIEW

(BOTH FACES)

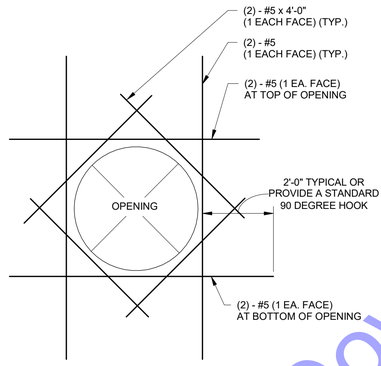

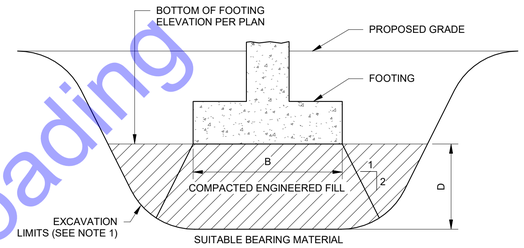

NOTES:
1. DEWATER EXCAVATION AS REQUIRED.
2. WIDTH OF EXCAVATION SHALL EQUAL WIDTH OF FOOTING PLUS DEPTH OF UNDERCUT (W=B+D).

8 S0-3 TYP. WALL TO BASE SLAB
1" = 1'-0"

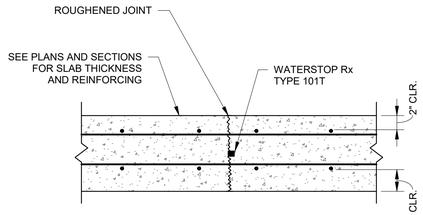

NOTES:
1. ALL REINFORCING TO BE CONTINUOUS THRU JOINT.
2. CONSTRUCTION JOINT SPACING NOT TO EXCEED 75'-0" U.N.O., LARGER JOINT SPACING MAY BE CONSIDERED, PROVIDED THAT THE GENERAL CONTRACTOR SUBMITS A DETAILED CONCRETE POURING PLAN FOR REVIEW AND GUARANTEES QUALITY CONTROL DURING PLACEMENT.
3. SEE SOIL REPORT FOR UNDERSLAB PREPARATION AND COMPACTION.
4. SEE GENERAL STRUCTURAL NOTES FOR LAP SPLICE REQUIREMENTS.

5 S0-3 TYP. CONC. WALL INTERSECTION
1/8" = 1'-0"

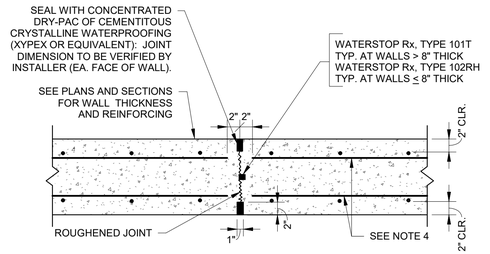

NOTES:
1. CONSTRUCTION JOINTS SHALL BE LOCATED AT JOINTS MARKED CJ.
2. WATERSTOPS AND DRY-PAC REQUIRED AT WATER RETAINING WALLS ONLY.
3. UNLESS NOTED OTHERWISE, CONSTRUCTION JOINT SPACING NOT TO EXCEED 120 FEET.
4. 50% OF THE HORIZ. REINF. STEEL SHALL BE CONTINUOUS THRU JOINT. HORIZONTAL BARS THAT STOP SHORT OF JOINT SHALL BE FABRICATED ACCORDINGLY AND SHALL NOT BE FIELD CUT. CONTINUOUS AND DISCONTINUOUS HORIZ. BARS SHALL BE ALTERNATED ALONG WALL HEIGHT.
5. SEE SPECIFIC DETAILS AT NOTED STRUCTURES WHERE 100% OF THE HORIZONTAL REINFORCING STEEL IS CONTINUOUS THRU JOINT.
6. CONSTRUCTION JOINTS SHALL NOT OCCUR WITHIN 5'-0" OF A CORNER.
7. SEE GENERAL STRUCTURAL NOTES FOR LAP SPLICE REQUIREMENTS.

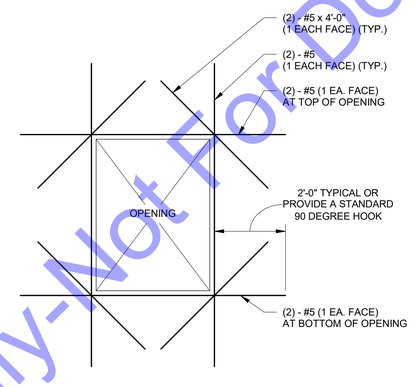

NOTES:
1. WHERE VERTICAL REINFORCING IS INTERRUPTED BY THE OPENING, ONE HALF OF THE INTERRUPTED STEEL SHALL BE ADDED TO EACH SIDE OF THE OPENING. USE FULL LENGTH BARS.
2. THIS DETAIL APPLIES TO ALL OPENINGS IN CONCRETE WALLS UNLESS DETAILED OTHERWISE ON THE PLANS.

1 S0-3 TYP. FOOTING IN UNDERCUT AREA
1" = 1'-0"

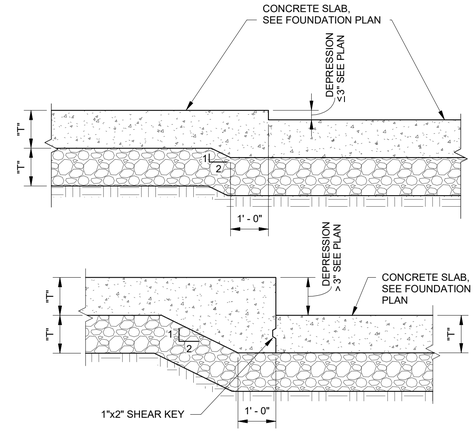

9 S0-3 TYP. BASE SLAB CONSTRUCTION JT.
1" = 1'-0"

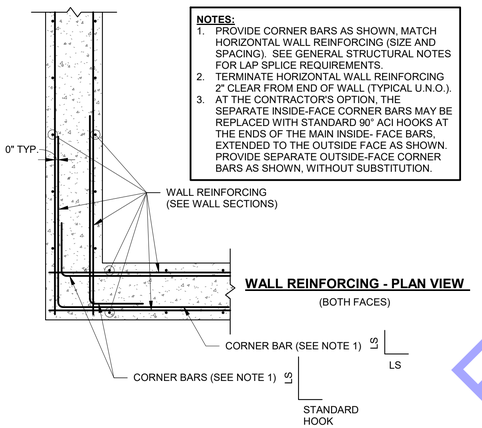

NOTES:
1. PROVIDE CORNER BARS AS SHOWN, MATCH HORIZONTAL WALL REINFORCING (SIZE AND SPACING). SEE GENERAL STRUCTURAL NOTES FOR LAP SPLICE REQUIREMENTS.
2. TERMINATE HORIZONTAL WALL REINFORCING 2" CLEAR FROM END OF WALL (TYPICAL U.N.O.).
3. AT THE CONTRACTOR'S OPTION, THE SEPARATE INSIDE-FACE CORNER BARS MAY BE REPLACED WITH STANDARD 90° ACI HOOKS AT THE ENDS OF THE MAIN INSIDE- FACE BARS, EXTENDED TO THE OUTSIDE FACE AS SHOWN. PROVIDE SEPARATE OUTSIDE-FACE CORNER BARS AS SHOWN, WITHOUT SUBSTITUTION.

WALL REINFORCING - PLAN VIEW

(BOTH FACES)

10 S0-3 TYPICAL CONCRETE WALL CORNER REINFORCEMENT - PLAN VIEW
3/4" = 1'-0"

6 S0-3 TYP. WALL CONSTRUCTION JOINT
1" = 1'-0"

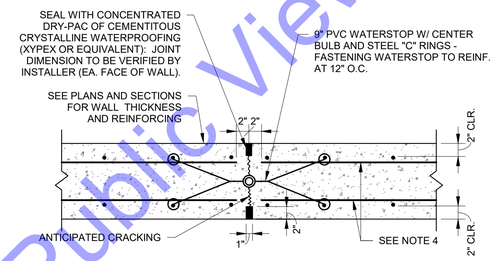

NOTES:
1. CONTRACTION JOINTS SHALL BE LOCATED AT JOINTS MARKED CT.
2. WATERSTOPS AND DRY-PAC REQUIRED AT WATER RETAINING WALLS ONLY.
3. UNLESS NOTED OTHERWISE, CONTRACTION JOINT SPACING NOT TO EXCEED 40 FEET.
4. 50% OF THE HORIZ. REINF. STEEL SHALL BE CONTINUOUS THRU JOINT. HORIZONTAL BARS THAT STOP SHORT OF JOINT SHALL BE FABRICATED ACCORDINGLY AND SHALL NOT BE FIELD CUT. CONTINUOUS AND DISCONTINUOUS HORIZ. BARS SHALL BE ALTERNATED ALONG WALL HEIGHT.
5. SEE SPECIFIC DETAILS AT NOTED STRUCTURES WHERE 100% OF THE HORIZONTAL REINFORCING STEEL IS CONTINUOUS THRU JOINT.
6. CONTRACTION JOINTS SHALL NOT OCCUR WITHIN 5'-0" OF A CORNER.
7. SEE GENERAL STRUCTURAL NOTES FOR LAP SPLICE REQUIREMENTS.

7 S0-3 TYP. WALL CONTRACTION JOINT
1" = 1'-0"

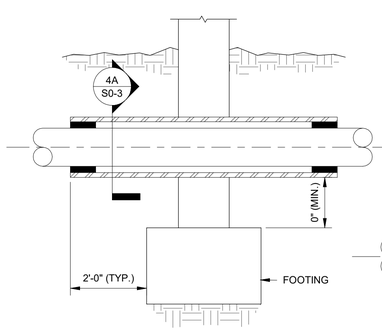

PIPE OVER FOOTING

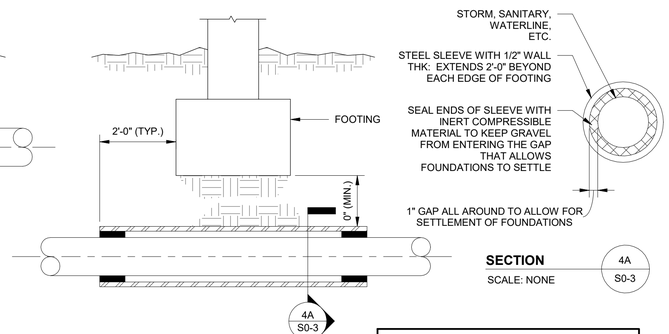

PIPE UNDER FOOTING

SECTION 4A S0-3

SCALE: NONE

NOTES:
1. COORDINATE THE USE OF THESE DETAILS WITH THE UNDERSLAB PIPING CONTRACTOR.
2. IF THE TOP OF THE SERVICE PIPE IS 2'-0" (OR GREATER) BELOW THE BOTTOM OF THE FOOTING, STEEL SLEEVE IS NOT REQUIRED.

4 S0-3 TYP. UNDERGROUND SERVICE PIPE DETAIL AT WALL FOUNDATION
1/8" = 1'-0"

For Public Viewing Only-Not For Downloading

COMMONWEALTH ENGINEERS, INC.
https://commonwealthengineers.com/
MATTHEW R. MURRAY REGISTERED PE11500002 STATE OF INDIANA PROFESSIONAL ENGINEER
Signature 10/03/2025 Date
CE Solutions structural engineers
3500 Depauw Blvd, Suite 3030, Indianapolis, IN 46268
ceindy@cesolutionsinc.com

TOWN OF NEWBURGH
WARRICK COUNTY, INDIANA

WASTEWATER TREATMENT PLANT FLOW EQ BASIN

© 2025 BY COMMONWEALTH ENGINEERS, INC. ALL RIGHTS RESERVED. REPRODUCTION BY ANY METHOD IN WHOLE OR IN PART WITHOUT PERMISSION IS PROHIBITED

Indiana 811 Know what's below. Dig before you dig. 1-800-382-5544 (ITS THE LAW)

No.	Submittal / Revision	By	Date

Designed By:	Drawn By:	Checked By:
MRM	RMS	MRM
Issue Date:	Project No:	Scale:
10/03/2025	25-107	As indicated

TYPICAL STRUCTURAL DETAILS - CONCRETE - 01

Drawing No: **S0-3**

Sheet: 82 OF 161

Saved: 10/2/2025 5:22:02 PM Current Local File: Autodesk Docs://Newburgh New WWTP EQ and Headworks/25-107_S0 GENERAL NOTES_v23.rvt

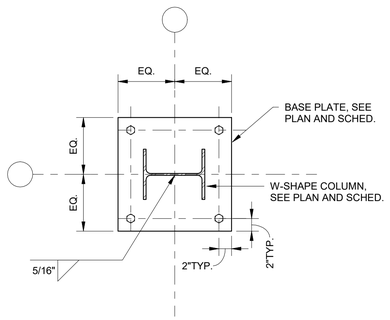

10 S0-4 TYP. BASE PLATE DETAIL
1" = 1'-0"

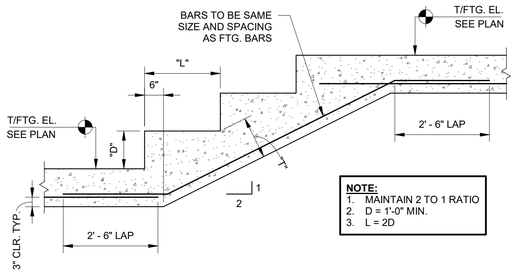

7 S0-4 TYP. STEP FOOTING
1/2" = 1'-0"

ANCHOR BOLT SCHEDULE

DIAMETER (D)	MIN. EMBEDMENT (E)	MIN. PIER EMBEDMENT (E)
1/2"	8"	22"
5/8"	8"	22"
3/4"	10"	22"
7/8"	12"	22"
1"	14"	24"
1 1/8"	16"	26"
1 1/4"	18"	28"
1 1/2"	20"	30"
1 3/4"	26"	36"

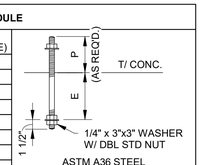

NOTES:
1. DIAMETER OF BOLT PER COLUMN SCHEDULE.
2. DEVELOPS FULL TENSILE CAPACITY OF SINGLE BOLT.
3. SEE COL. SCHEDULE FOR ADD'L ANCHOR BOLT INFO.

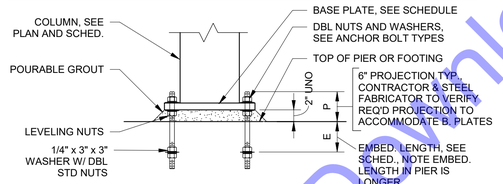

4 S0-4 GROUTING & ANCHOR BOLT REQ'TS.
1" = 1'-0"

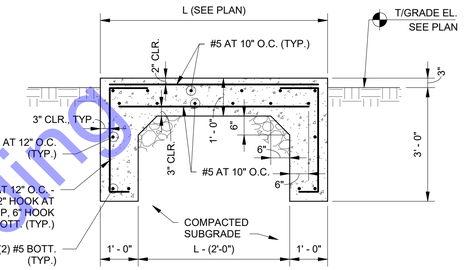

SECTION

NOTES:
1. SEE PROCESS DRAWINGS FOR EQUIPMENT PAD LOCATION.
2. TOP OF EQUIPMENT PAD SHALL BE FLAT AND LEVEL.
3. COORDINATE EQUIPMENT PADS WITH THE SELECTED MECHANICAL/ELECTRICAL CONTRACTORS.

1 S0-4 TYP. GENERATOR PAD
1/2" = 1'-0"

11 S0-4 TYP. BASE PLATE DETAIL
1" = 1'-0"

8 S0-4 TYP. TRENCH DRAIN DETAIL
3/4" = 1'-0"

NOTES:
1. INSTALL PNA DIAMOND DOWEL PLATES PER MANUFACTURER'S RECOMMENDATIONS.
2. PRIOR TO SEALING JOINT, PREPARE JOINT PER SEALANT MANUFACTURER'S RECOMMENDATIONS.
3. CONSTRUCTION JOINTS SHALL ONLY OCCUR AT LOCATIONS INDICATED.
4. APPLY LIQUID BOND BREAKER TO FULL DEPTH OF JOINT.

5 S0-4 TYP. SLAB ON GRADE CONSTRUCTION JOINT
1" = 1'-0"

NOTES:
1. CONTRACTOR - VERIFY LOCATION OF THE HOUSEKEEPING PADS WITH THE PROCESS DRAWINGS PRIOR TO POURING CONCRETE.
2. CONTRACTOR - VERIFY REQUIRED SIZE AND HEIGHT OF THE HOUSEKEEPING PADS WITH THE SELECTED EQUIPMENT MANUFACTURER PRIOR TO POURING CONCRETE.

2 S0-4 TYP. HOUSEKEEPING PAD
1" = 1'-0"

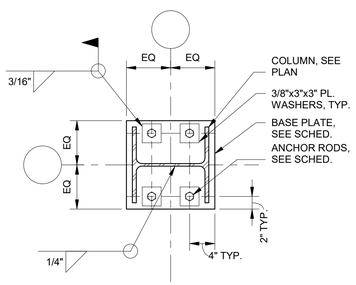

12 S0-4 TYP. BASE PLATE DETAIL
1" = 1'-0"

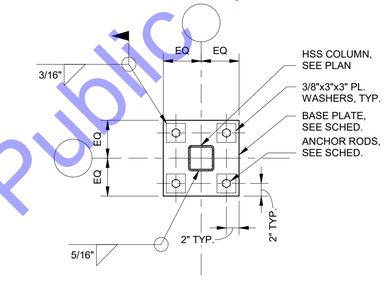

9 S0-4 TYP. BASE PLATE DETAIL
1" = 1'-0"

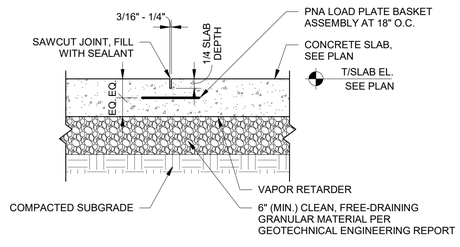

NOTES:
1. SAWCUT JOINT AS SOON AS POSSIBLE WITHOUT RAVELING THE EDGE OF CONCRETE.
2. PRIOR TO SEALING JOINT, PREPARE JOINT PER SEALANT MANUFACTURER'S RECOMMENDATIONS.

6 S0-4 TYP. SLAB ON GRADE CONTRACTION JOINT
1" = 1'-0"

3 S0-4 TYP. PEDESTAL DETAIL
1/2" = 1'-0"

For Public Viewing Only-Not For Downloading

COMMONWEALTH ENGINEERS, INC.
A network of resources to create a common good.
https://commonwealthengineers.com/
MATTHEW R. MURRAY REGISTERED PE11500002 STATE OF INDIANA PROFESSIONAL ENGINEER
Signature
10/03/2025
Date
CE Solutions structural engineers
CEsolutionsinc.com

TOWN OF NEWBURGH
WARRICK COUNTY, INDIANA

WASTEWATER TREATMENT
PLANT FLOW EQ BASIN

© 2025 BY COMMONWEALTH ENGINEERS, INC. ALL RIGHTS RESERVED. REPRODUCTION BY ANY METHOD IN WHOLE OR IN PART WITHOUT PERMISSION IS PROHIBITED

Indiana811 Know what's below. Call before you dig. 1-800-382-5544 (ITS THE LAW)

No.	Submittal / Revision	By	Date

Designed By:	Drawn By:	Checked By:
MRM	RMS	MRM
Issue Date:	Project No:	Scale:
10/03/2025	25-107	As indicated

TYPICAL STRUCTURAL DETAILS - CONCRETE - 02

Drawing No:
S0-4
Sheet: 83 OF 161

Saved: 10/2/2025 5:22:04 PM Current Local File: Autodesk Docs://Newburgh New WWTP EQ and Headworks/25-107_S0 GENERAL NOTES_v23.rvt

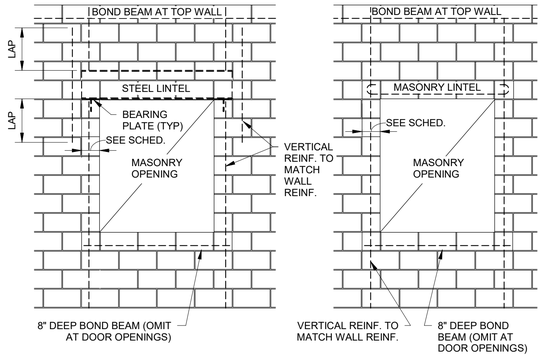

10 S0-5 TYP. WALL OPNG. REINFORCING

3/8" = 1'-0"

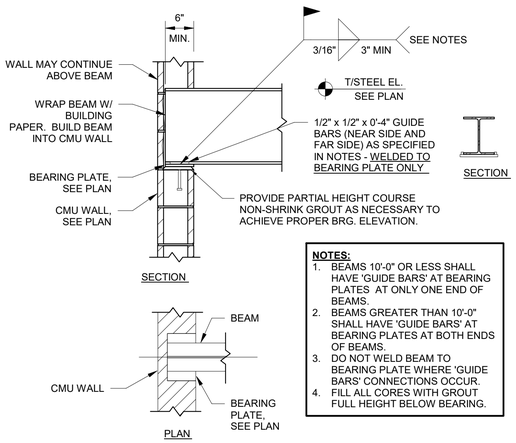

NOTES:
1. BEAMS 10'-0" OR LESS SHALL HAVE 'GUIDE BARS' AT BEARING PLATES AT ONLY ONE END OF BEAMS.
2. BEAMS GREATER THAN 10'-0" SHALL HAVE 'GUIDE BARS' AT BEARING PLATES AT BOTH ENDS OF BEAMS.
3. DO NOT WELD BEAM TO BEARING PLATE WHERE 'GUIDE BARS' CONNECTIONS OCCUR.
4. FILL ALL CORES WITH GROUT FULL HEIGHT BELOW BEARING.

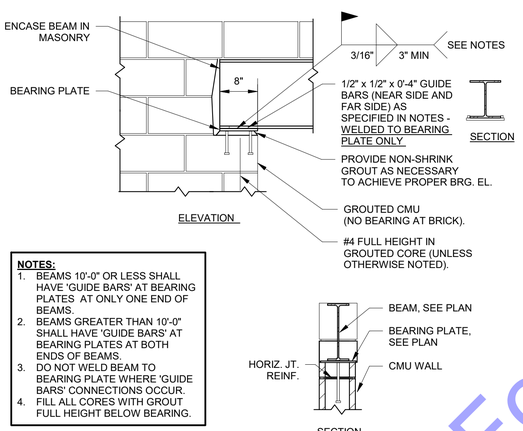

NOTES:
1. BEAMS 10'-0" OR LESS SHALL HAVE 'GUIDE BARS' AT BEARING PLATES AT ONLY ONE END OF BEAMS.
2. BEAMS GREATER THAN 10'-0" SHALL HAVE 'GUIDE BARS' AT BEARING PLATES AT BOTH ENDS OF BEAMS.
3. DO NOT WELD BEAM TO BEARING PLATE WHERE 'GUIDE BARS' CONNECTIONS OCCUR.
4. FILL ALL CORES WITH GROUT FULL HEIGHT BELOW BEARING.

11 S0-5 STEEL BEAM LINTEL DETAIL

3/4" = 1'-0"

7 S0-5 TYP. MASONRY BOND BEAM

1 1/2" = 1'-0"

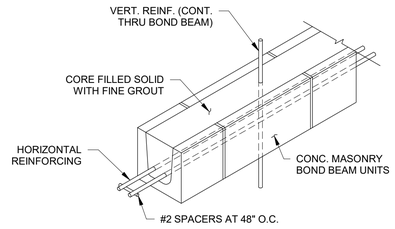

8 S0-5 BOND BEAM DETAIL

1" = 1'-0"

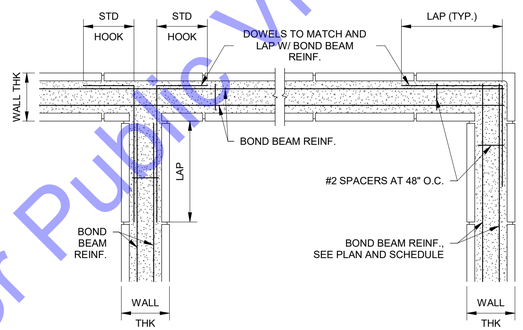

9 S0-5 TYP. BOND BEAM REINFORCEMENT

1" = 1'-0"

4 S0-5 MASONRY DETAILS

1" = 1'-0"

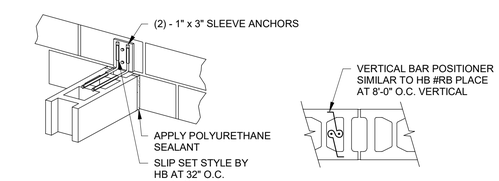

GROUT VERTICAL CORE SOLID TO BOTTOM OF LINTEL BLOCK BEFORE POURING BOND BEAM

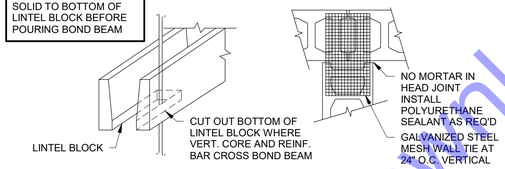

5 S0-5 TYP. MASONRY REINFORCING CLIPS

1" = 1'-0"

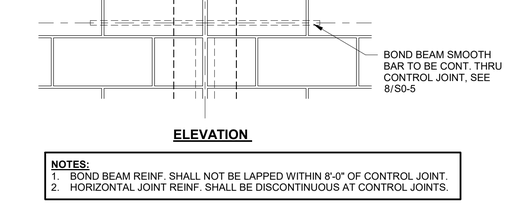

NOTE:
1. CAGING DEVICES AND CENTERING CLIPS SHALL BE FORMED FROM #9 HARD WIRE; SPOT WELDED AND GALVANIZED.

6 S0-5 TYP. MASONRY CONTROL JOINT

1" = 1'-0"

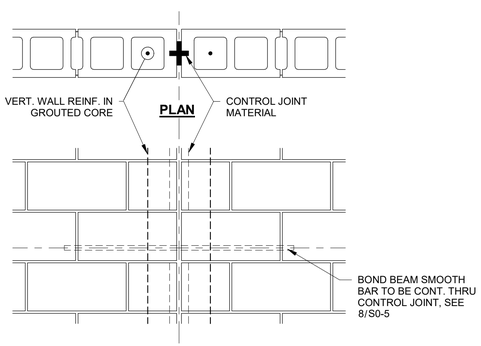

NOTES:
1. BOND BEAM REINF. SHALL NOT BE LAPPED WITHIN 8'-0" OF CONTROL JOINT.
2. HORIZONTAL JOINT REINF. SHALL BE DISCONTINUOUS AT CONTROL JOINTS.

1 S0-5 LOW LIFT GROUTING DETAIL

1/2" = 1'-0"

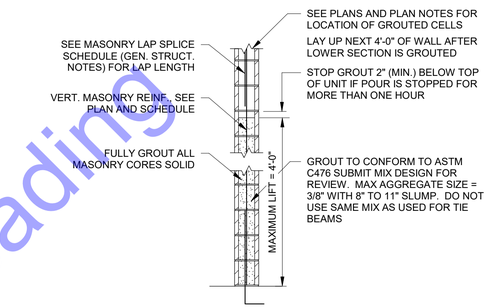

NOTES:
1. DO NOT GROUT UNTIL MORTAR HAS SET SUFFICIENTLY TO WITHSTAND THE PRESSURE OF THE GROUT. WAIT NOT LESS THAN 24 HOURS.

2 S0-5 HIGH LIFT GROUTING DETAIL

1/2" = 1'-0"

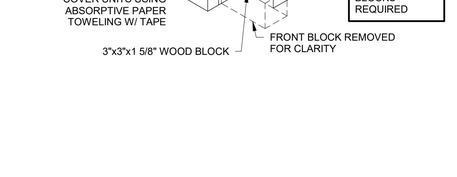

NOTES:
1. DO NOT GROUT UNTIL MORTAR HAS SET SUFFICIENTLY TO WITHSTAND THE PRESSURE OF THE GROUT. WAIT NOT LESS THAN 24 HOURS.

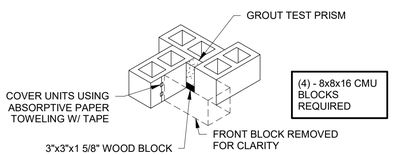

3 S0-5 GROUT TEST MOLD (ASTM C-1019)

1/2" = 1'-0"

For Public Viewing Only-Not For Downloading

COMMONWEALTH ENGINEERS, INC.
A division of Commonwealth Consulting Group
https://commonwealthengineers.com/

MATTHEW R. MURRAY
REGISTERED
PE11500002
STATE OF INDIANA
PROFESSIONAL ENGINEER
Matt Murray 10/03/2025
Signature Date

CE Solutions
structural engineers
2020 Lake Road, Suite 300
Ferron, IN 46526
ceSolutionsinc.com

TOWN OF NEWBURGH
WARRICK COUNTY, INDIANA

WASTEWATER TREATMENT PLANT FLOW EQ BASIN

© 2025 BY COMMONWEALTH ENGINEERS, INC. ALL RIGHTS RESERVED. REPRODUCTION BY ANY METHOD IN WHOLE OR IN PART WITHOUT PERMISSION IS PROHIBITED

Indiana 811 Know what's below. 811 before you dig. 1-800-382-5544 (ITS THE LAW)

No.	Submittal / Revision	By	Date

Designed By:	Drawn By:	Checked By:
MRM	RMS	MRM
Issue Date:	Project No:	Scale:
10/03/2025	25-107	As indicated

TYPICAL STRUCTURAL DETAILS - MASONRY - 01

Drawing No:
S0-5
Sheet: 84 OF 161

Saved: 10/2/2025 5:22:09 PM Current Local File: Autodesk Docs://Newburgh New WWTP EQ and Headworks/25-107_S0 GENERAL NOTES_v23.rvt

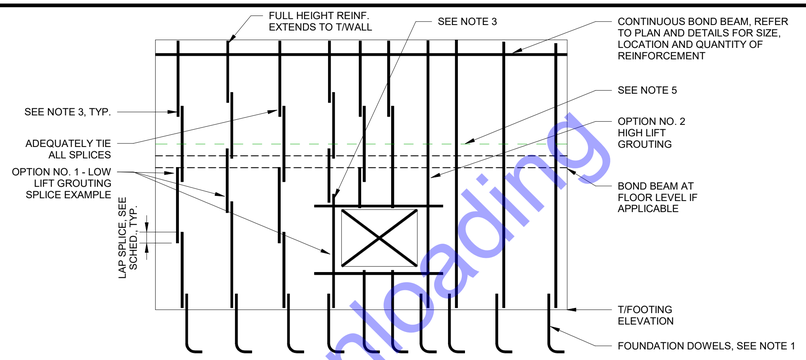

NOTES:
1. VERTICAL WALL REINFORCING SHALL ALIGN WITH VERTICAL FOUNDATION DOWELS. SEE PLAN AND SCHEDULE FOR REINFORCEMENT SIZE AND SPACING.
2. FOR LINTEL REINFORCEMENT, REFER TO C.M.U. LINTEL SCHEDULE FOR SIZE, LOCATION AND QUANTITY OF REINFORCEMENT.
3. SPLICES IN ADJACENT BARS SHALL BE STAGGERED AND ARRANGED SO THAT NOT MORE THAN 1/2 OF THE TOTAL NUMBER OF BARS ARE SPLICED AT ANY ONE HEIGHT.
4. HORIZONTAL WALL REINFORCING SHALL BE STANDARD TRUSS TYPE AT 16" O.C. ABOVE AND 8" O.C. BELOW GRADE, UNLESS NOTED OTHERWISE.
5. EITHER LOW LIFT (OPTION NO. 1) OR HIGH LIFT (OPTION NO. 2) GROUTING TECHNIQUE MAY BE USED AT CONTRACTOR'S OPTION.

1 S0-6 TYP. MASONRY WALL REINFORCING DETAIL

3/4" = 1'-0"

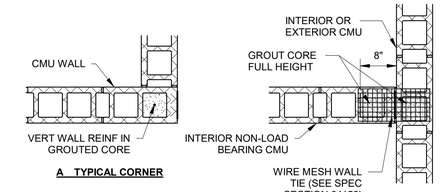

A TYPICAL CORNER

B TYPICAL INTERSECTION

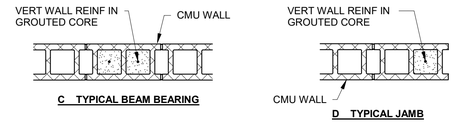

C TYPICAL BEAM BEARING

D TYPICAL JAMB

NOTES:
1. REINFORCING SHOWN IS IN ADDITION TO REINFORCING SHOWN ON PLANS AND SPECIAL DETAILS.
2. REINFORCING TO BE THE SAME SIZE AS ADJACENT WALL REINFORCING AS INDICATED ON PLANS.
3. TYPICAL DETAILS APPLY TO ALL EXTERIOR WALLS AND INTERIOR LOAD BEARING WALLS.

2 S0-6 TYP. VERTICAL MASONRY WALL REINF.

3/4" = 1'-0"

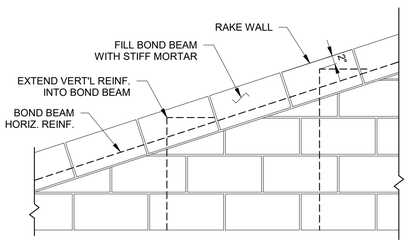

3 S0-6 TYP. SLOPED BOND BEAM

3/4" = 1'-0"

For Public Viewing Only-Not For Downloading

COMMONWEALTH ENGINEERS, INC.
A network of resources to create a common goal.
https://commonwealthengineers.com/

MATTHEW R. MURRAY REGISTERED PE11500002 STATE OF INDIANA PROFESSIONAL ENGINEER
Signature Date 10/03/2025

CE Solutions structural engineers
317.660.3300 | Fishers, IN 46038
ceisolutionsllc.com

TOWN OF NEWBURGH
WARRICK COUNTY, INDIANA

WASTEWATER TREATMENT PLANT FLOW EQ BASIN

© 2025 BY COMMONWEALTH ENGINEERS, INC. ALL RIGHTS RESERVED. REPRODUCTION BY ANY METHOD IN WHOLE OR IN PART WITHOUT PERMISSION IS PROHIBITED

Indiana 811 Know what's below. Call before you dig. 1-800-382-5544 (ITS THE LAW)

No.	Submittal / Revision	By	Date

Designed By:	Drawn By:	Checked By:
MRM	RMS	MRM
Issue Date:	Project No:	Scale:
10/03/2025	25-107	3/4" = 1'-0"

TYPICAL STRUCTURAL DETAILS - MASONRY - 02

Drawing No:
S0-6
Sheet: 85 OF 161

Saved: 10/2/2025 5:22:09 PM Current Local File: Autodesk Docs://Newburgh New WWTP EQ and Headworks/25-107_S0 GENERAL NOTES_v23.rvt

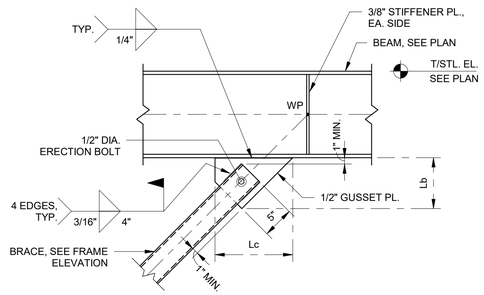

NOTE:
GUSSET PLATE WILL VARY IN SIZE AND SHAPE (Lb AND Lc) BASED ON BRACE CONFIGURATION AT EACH LOCATION. FABRICATOR SHALL SIZE GUSSET PLATES TO ACCOMMODATE MINIMUM DISTANCES AND WELDS AS NOTED.

5 BRACE CONNECTION DETAIL
S0-7 1" = 1'-0"

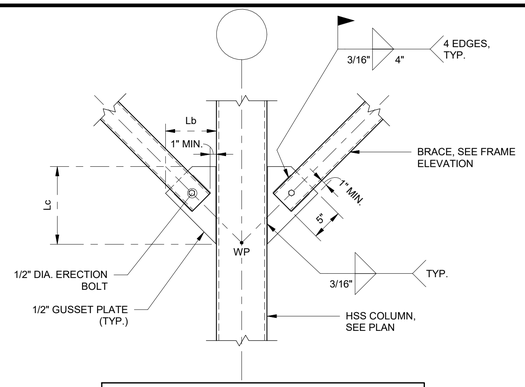

NOTE:
GUSSET PLATE WILL VARY IN SIZE AND SHAPE (Lb AND Lc) BASED ON BRACE CONFIGURATION AT EACH LOCATION. FABRICATOR SHALL SIZE GUSSET PLATES TO ACCOMMODATE MINIMUM DISTANCES AND WELDS AS NOTED.

4 BRACE CONNECTION DETAIL
S0-7 1" = 1'-0"

SINGLE SHEAR PLATE BEAM CONNECTION SCHEDULE (SHOP WELDED, FIELD BOLTED)

BEAM SIZE (SEE PLAN)	NO. OF 3/4" DIA. A325-N BOLTS	THRU-PLATE THICKNESS (36 KSI), in.	FILLET WELD SIZE (E70XX), in.	MAXIMUM ALLOWABLE END REACTION, KIPS	LENGTH (L), in.
W8, W10	2	5/16"	1/4"	8.2	6
W12, W14	3	3/8"	1/4"	16.3	9
W16, W18	4	3/8"	1/4"	26.1	12
W21	5	3/8"	5/16"	36.3	15
W24	6	3/8"	5/16"	46.3	18
W27	7	3/8"	5/16"	56.4	21

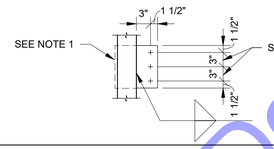

NOTES:
1. USE THRU PLATE AT STEEL TUBE OR PIPE COLUMNS FOR BEAMS W21 AND LARGER.
2. FOR BEAMS W30 OR LARGER, FABRICATOR SHALL DESIGN THE SHEAR CONNECTION BASED ON THE REACTION SHOWN ON THE PLAN.
3. SEE SCHEDULE ABOVE FOR NUMBER OF BOLTS (3" GA).

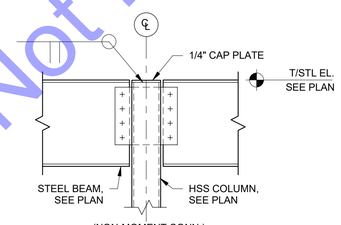

A325 BOLT SCHEDULE FOR SINGLE SHEAR PLATE CONNECTIONS

END REACTION	NO. OF BOLT LINES	TOTAL NO. OF BOLTS
0 thru 8.2 kips	2	2- 3/4" DIA.
8.2 thru 16.3 kips	3	3- 3/4" DIA.
16.3 thru 26.1 kips	4	4- 3/4" DIA.
26.1 thru 36.3 kips	5	5- 3/4" DIA.
36.3 thru 46.3 kips	6	6- 3/4" DIA.
46.3 thru 56.4 kips	7	7- 3/4" DIA.

NOTES:
1. VALUES SHOWN ARE APPLICABLE FOR SINGLE SHEAR PLATE CONNECTIONS
2. SEE PLAN FOR END REACTIONS
3. ALL PLATES SHALL BE 3/8" THICK (U.N.O.)
4. NUMBER OF FASTENERS FOR LOADS GREATER THAN 56.4 KIPS SHALL BE BY STEEL SUPPLIER.

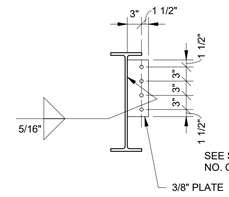

A325 BOLT SCHEDULE FOR DOUBLE ANGLE CONNECTIONS

END REACTION	NO. OF BOLT LINES	TOTAL NO. OF BOLTS	TOTAL LENGTH OF ANGLE
0 thru 37.1 kips	2	4- 3/4" DIA.	6"
37.1 thru 55.7 kips	3	6- 3/4" DIA.	9"
55.7 thru 74.2 kips	4	8- 3/4" DIA.	12"
74.2 thru 92.8 kips	5	10- 3/4" DIA.	15"
92.8 thru 111 kips	6	12- 3/4" DIA.	18"

NOTES:
1. SEE PLAN FOR END REACTIONS
2. BOLT PITCH 3", VERTICAL EDGE DIST. 1 1/2" (U.N.O.)
3. VALUES SHOWN ARE APPLICABLE TO DBL. ANGLE CONNECTIONS (WHERE DESIGNATED)
4. ALL ANGLES SHALL BE L3x3x3/8 (U.N.O.)

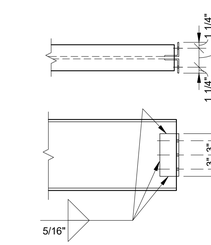

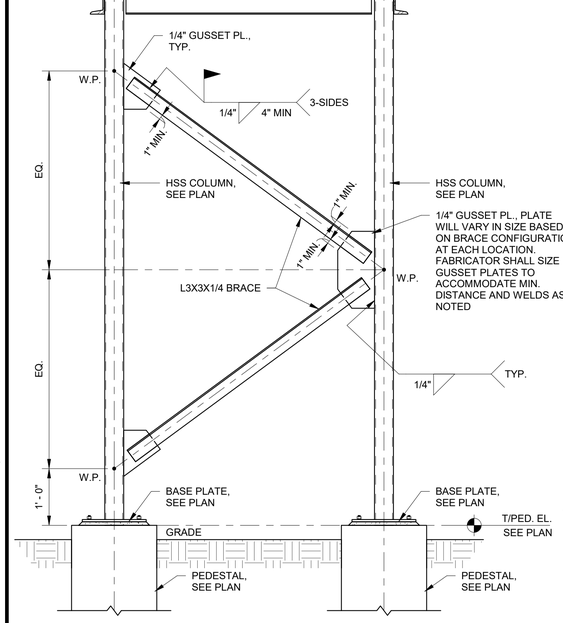

6 STAIR BRACING
S0-7 3/4" = 1'-0"

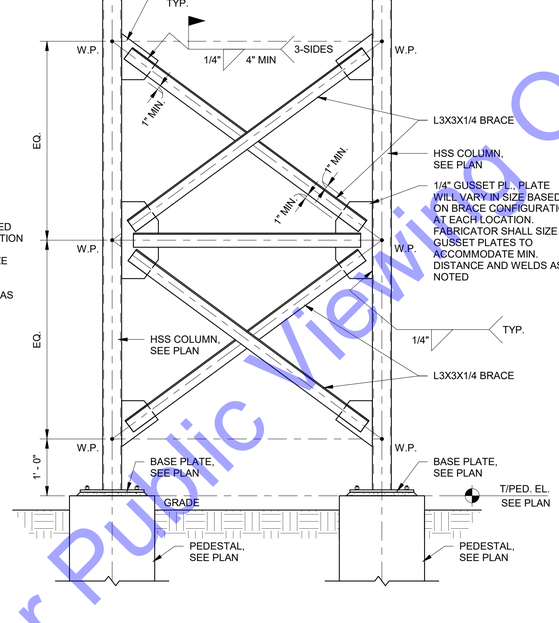

7 STAIR BRACING
S0-7 3/4" = 1'-0"

2 BEAM-TO-COLUMN SCHEDULE
S0-7 3/4" = 1'-0"

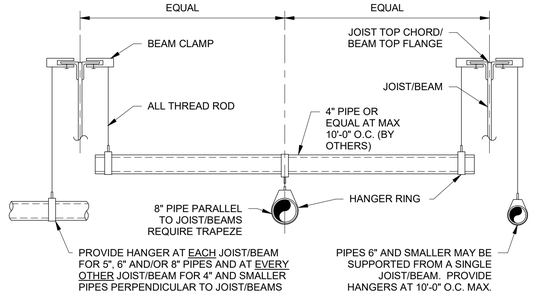

NOTES:
1. LOCATE HANGERS WITHIN 6" OF THE JOIST TOP CHORD PANEL POINTS.
2. PIPES LARGER THAN 8" SHALL BE SUBMITTED TO ARCHITECT FOR APPROVAL. INCLUDE LOCATION OF PIPE AND PREFERRED HANGING DETAIL.
3. DESIGN OF LATERAL BRACING FOR SUSPENDED PIPES IN SEISMIC AREAS SHALL BE SUBMITTED TO ARCHITECT FOR APPROVAL.
4. PIPES SUSPENDED IN CONFORMANCE WITH THIS DETAIL WILL LIMIT THE SPRINKLER SYSTEM WEIGHT TO 3.0 PSF EQUIVALENT DISTRIBUTED LOAD.

3 TYP. PIPE HANGER DETAIL
S0-7 3/4" = 1'-0"

1 STEEL BEAM CONNECTION SCHEDULE
S0-7 3/4" = 1'-0"

For Public Viewing Only-Not For Downloading

COMMONWEALTH ENGINEERS, INC.
https://commonwealthengineers.com/
MATTHEW R. MURRAY REGISTERED PE11500002 STATE OF INDIANA PROFESSIONAL ENGINEER
Signature 10/03/2025 Date
CE Solutions structural engineers
Fishers, IN 46038

TOWN OF NEWBURGH
WARRICK COUNTY, INDIANA

WASTEWATER TREATMENT PLANT FLOW EQ BASIN

© 2025 BY COMMONWEALTH ENGINEERS, INC. ALL RIGHTS RESERVED. REPRODUCTION BY ANY METHOD IN WHOLE OR IN PART WITHOUT PERMISSION IS PROHIBITED

Indiana811 Know what's below. 811 before you dig. 1-800-382-5544 (ITS THE LAW)

No.	Submittal / Revision	By	Date

Designed By:	Drawn By:	Checked By:
MRM	RMS	MRM
Issue Date:	Project No:	Scale:
10/03/2025	25-107	As indicated

TYPICAL STRUCTURAL DETAILS - FRAMING - 01

Drawing No: **S0-7**

Sheet: 86 OF 161

Saved: 10/2/2025 5:22:16 PM Current Local File: Autodesk Docs://Newburgh New WWTP EQ and Headworks/25-107_S0 GENERAL NOTES_v23.rvt

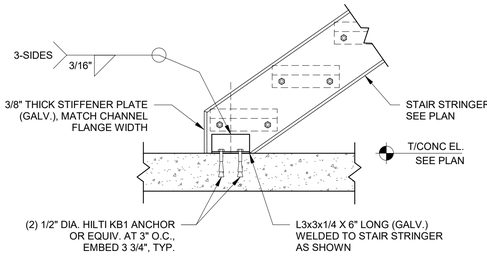

7 SECTION
S0-8 1" = 1'-0"

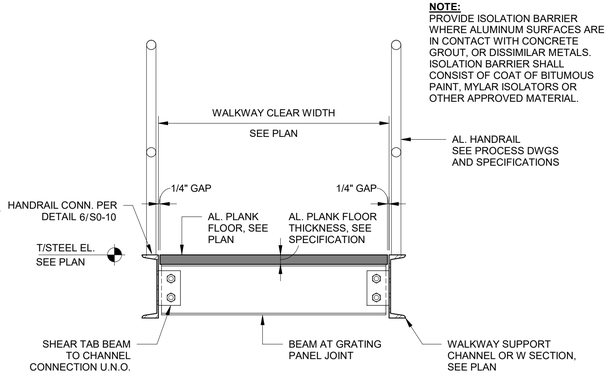

WALKWAY SECTION - TRANSVERSE BEAM
4 S0-8 1" = 1'-0"

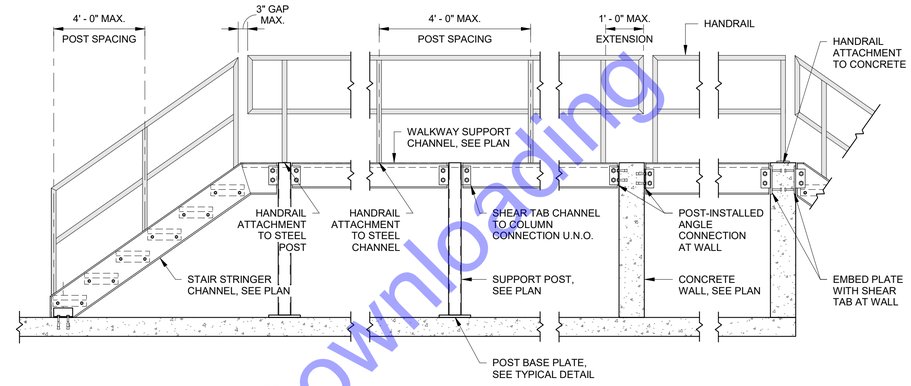

1 TYP. STAIR AND WALKWAY LAYOUT
S0-8 1/2" = 1'-0"

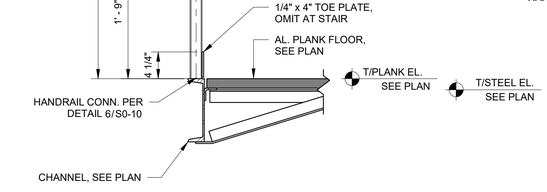

HANDRAIL SECTION - WALKWAY ATTACHMENT
8 S0-8 1" = 1'-0"

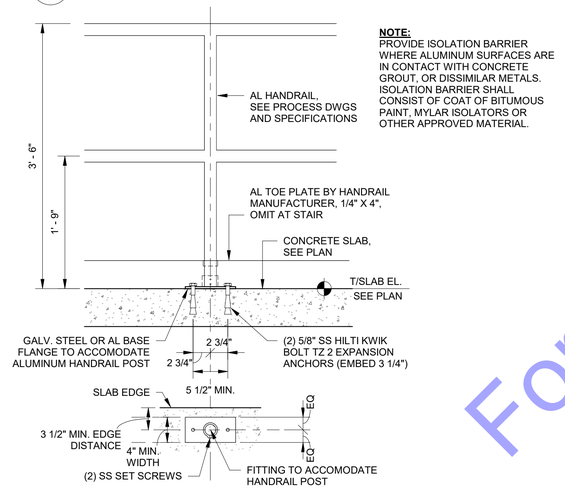

9 HANDRAIL SECTION - CONC. ATTACHMENT
S0-8 1" = 1'-0"

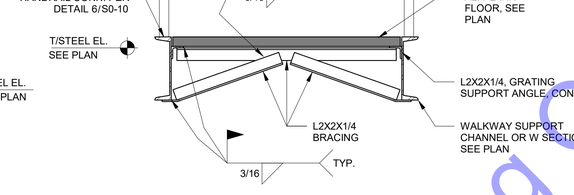

WALKWAY SECTION - BRACING AT HANDRAIL
5 S0-8 1" = 1'-0"

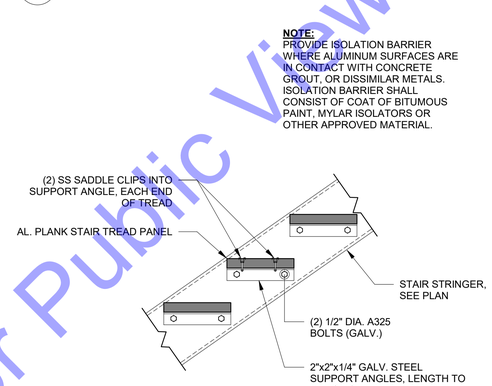

6 SECTION
S0-8 1" = 1'-0"

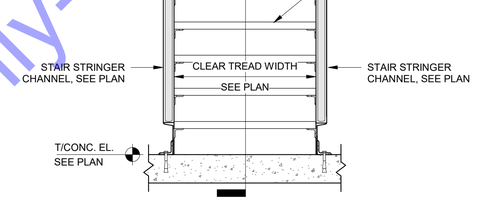

CROSS-SECTION

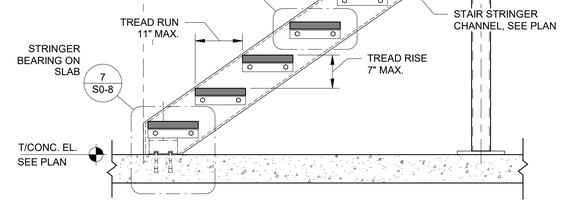

SECTION A

2 TYP. STAIR DETAIL
S0-8 3/4" = 1'-0"

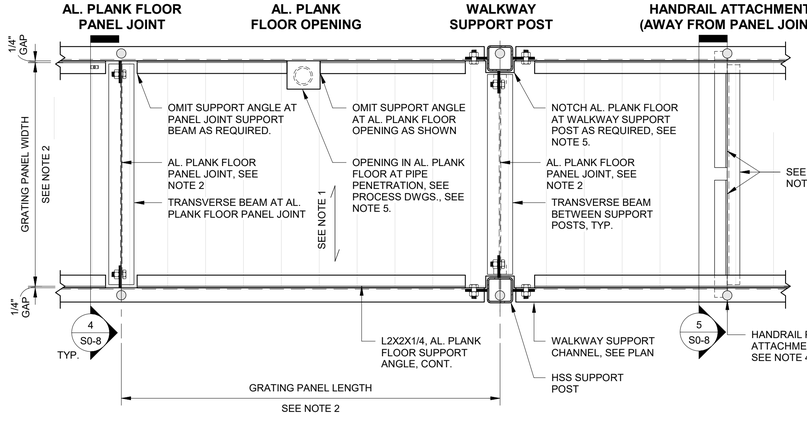

AL. PLANK FLOOR WALKWAY NOTES:

1. AL. PLANK FLOOR PANELS SHALL BE ORIENTED TO SPAN PARALLEL TO WALKWAY.
2. TYP. PANEL LENGTH = 3'-0" MAX. , U.N.O. TYP. PANEL WIDTH = 5'-0", U.N.O.

   PROVIDE TRANSVERSE BEAM AT PANEL JOINT LOCATIONS AS SHOWN.

   AL. PLANK FLOOR PANEL JOINT LAYOUT SHALL BE DEVELOPED BY AL. PLANK FLOOR PROVIDER.
3. STAINLESS STEEL AL. PLANK FLOOR FASTENER CLIPS BY AL. PLANK FLOOR PROVIDER. PROVIDE MIN. OF (4) CLIPS PER AL. PLANK FLOOR PANEL.
4. AL. HANDRAIL POST LAYOUT SHALL BE DEVELOPED BY STEEL FABRICATOR. ALIGN HANDRAIL ATTACHMENT LOCATIONS WITH TRANSVERSE BEAMS WHEN POSSIBLE. WHEN HANDRAIL POST ATTACHMENTS ARE NOT ALIGNED WITH TRANSVERSE BEAMS, PROVIDE L2 ANGLE BRACING AS SHOWN.
5. PROVIDE ISOLATION BARRIER BETWEEN ALUMINUM PLANK FLOOR AND STEEL SUPPORT.

3 TYPICAL WALKWAY ENLARGED PLAN
S0-8 1" = 1'-0"

For Public Viewing Only-Not For Downloading

COMMONWEALTH ENGINEERS, INC.
https://commonwealthengineers.com/
MATTHEW R. MURRAY REGISTERED PE11500002 STATE OF INDIANA PROFESSIONAL ENGINEER
Signature 10/03/2025 Date
CE Solutions structural engineers
3333 Vision Drive, Suite 300, Fishers, IN 46038, 317.915.1333, ceSolutionsInc.com

TOWN OF NEWBURGH
WARRICK COUNTY, INDIANA

WASTEWATER TREATMENT
PLANT FLOW EQ BASIN

© 2025 BY COMMONWEALTH ENGINEERS, INC. ALL RIGHTS RESERVED. REPRODUCTION BY ANY METHOD IN WHOLE OR IN PART WITHOUT PERMISSION IS PROHIBITED

Indiana 811 Know what's below. 811 before you dig. 1-800-382-5544 (ITS THE LAW)

No.	Submittal / Revision	By:	Date

Designed By:	Drawn By:	Checked By:
MRM	RMS	MRM
Issue Date:	Project No:	Scale:
10/03/2025	25-107	As indicated

TYPICAL STRUCTURAL DETAILS - STAIRS - 01

Drawing No: **S0-8**

Sheet: 87 OF 161

Saved: 10/2/2025 5:22:25 PM Current Local File: Autodesk Docs://Newburgh New WWTP EQ and Headworks/25-107_S0 GENERAL NOTES_v23.rvt

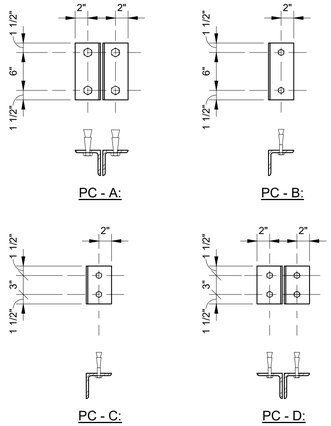

POST-INSTALLED CONNECTION SCHEDULE		
MARK	ANGLE SIZE	POST-INSTALLED ANCHORS
PC-A	(2) L4X4X3/8 X 0'-9"	(4) 1/2" DIA. (SS) HILTI HAS RODS WITH HILTI-HY 270 ADHESIVE SYSTEM (4 1/2" EMBED)
PC-B	(1) L4X4X3/8 X 0'-9"	(2) 1/2" DIA. (SS) HILTI HAS RODS WITH HILTI-HY 270 ADHESIVE SYSTEM (4-1/2" EMBED)
PC-C	(1) L4X4X3/8 X 0'-6"	(2) 1/2" DIA. (SS) HILTI HAS ROD WITH HILTI HIT-HY 200 ADHESIVE SYSTEM (4-1/2" EMBED)
PC-D	(2) L4X4X3/8 X 0'-6"	(4) 1/2" DIA. (SS) HILTI HAS ROD WITH HILTI HIT-HY 200 ADHESIVE SYSTEM (4-1/2" EMBED)

NOTES:
1. CMU WALLS SHOULD BE FULLY GROUTED AT AND BELOW POST-INSTALLED ANCHOR LOCATIONS.
2. COORDINATE PLACEMENT WITH REINFORCING AND OTHER ITEMS EMBEDDED IN CONCRETE.
3. WHERE ADHESIVE ANCHORS ARE INSTALLED IN HOLLOW CMU BLOCKS, PROVIDE SUPPLEMENTAL SLEEVE PER MANUFACTURERS RECOMMENDATIONS.

3 S0-9 POST-INSTALLED CONNECTION SCHEDULE
1" = 1'-0"

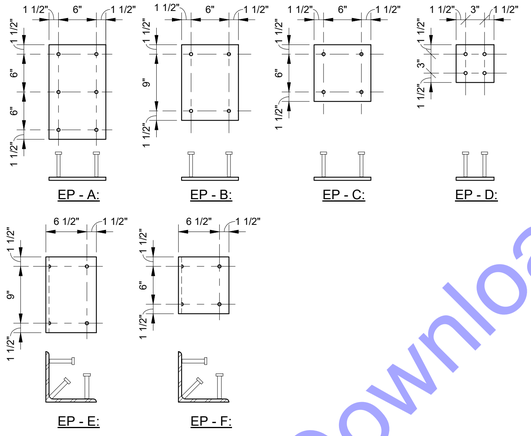

STEEL EMBED SCHEDULE		
MARK	PLATE SIZE	HAS STUDS
EP-A	1/2" X 15" X 1'-3"	(6) 1/2" DIA. X 5"
EP-B	1/2" X 12" X 0'-9"	(4) 1/2" DIA. X 5"
EP-C	1/2" X 9" X 0'-9"	(4) 1/2" DIA. X 5"
EP-D	1/2" X 6" X 0'-6"	(4) 1/2" DIA. X 5"
EP-E	L8X8X1/2 X 1'-0"	(6) 5/8" DIA. X 4"
EP-F	L8X8X1/2 X 0'-9"	(6) 5/8" DIA. X 4"

NOTES:
1. HEADED ANCHOR STUDS SHALL BE AUTOMATICALLY END-WELDED USING NELSON STUD WELDING EQUIP. OR APPROVED EQUIVALENT. HAND WELDING IS NOT ACCEPTABLE.
2. COORDINATE PLACEMENT WITH REINFORCING AND OTHER ITEMS EMBEDDED IN CONCRETE.

1 S0-9 EMBED PLATE SCHEDULE
1" = 1'-0"

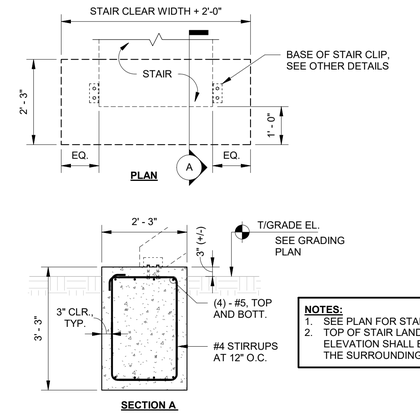

NOTES:
1. SEE PLAN FOR STAIR LOCATIONS.
2. TOP OF STAIR LANDING FOUNDATION ELEVATION SHALL BE SET 3" (+/-) ABOVE THE SURROUNDING GRADE ELEVATION.

4 S0-9 TYP. EXTERIOR STAIR LANDING FOUNDATION
1/2" = 1'-0"

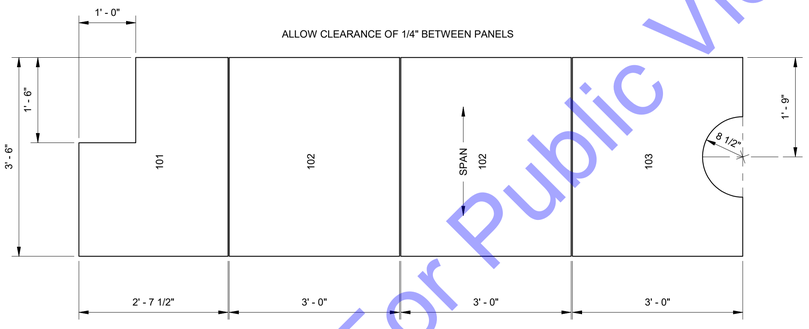

NOTE: PANELS MADE FROM 6" SECTIONS AND PARTIAL SECTIONS ARE BANDED ON THE ENDS ONLY. SIDE BANDS TYPICALLY ARE NOT FURNISHED, UNLESS SPECIFIED BY THE CUSTOMER.

5 S0-9 TYPICAL PANEL LAYOUT
3/4" = 1'-0"

NOTE: THIS METHOD CAN ONLY BE USED WITH GRATING IS LOCATED AT TOP OF WALL OR SLAB

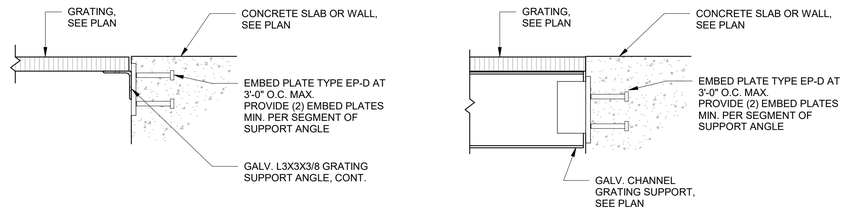

NOTE:
1. CONTRACTOR'S OPTION: UNLESS OTHERWISE NOTED ON PLANS, GRATING / PLANK SUPPORT CAN BE PROVIDED BY ANY ONE OF THESE THREE METHODS WHERE GRATING EDGE IS SUPPORTED BY CONCRETE SLAB OR WALL.
2. SEE PROCESS DRAWINGS FOR LIMITS OF GRATING / PLANK SUPPORT
3. PROVIDE ISOLATION BARRIER WHERE ALUMINUM SURFACES ARE IN CONTACT WITH CONCRETE GROUT, OR DISSIMILAR METALS. ISOLATION BARRIER SHALL CONSIST OF COAT OF BITUMOUS PAINT, MYLAR ISOLATORS OR OTHER APPROVED MATERIAL.
4. WHEN INSTALLING ANCHOR INTO CMU WALL, THE CMU WALLS SHOULD BE FULLY GROUTED AT AND BELOW POST-INSTALLED ANCHOR LOCATIONS. FOLLOW ANCHOR MANUFACTURER'S GUIDELINES FOR ANCHOR PLACING REQUIREMENT.

2 S0-9 TYP. GRATING OR FLOOR PLANK SUPPORT AT CONCRETE SLAB OR WALL
1 1/2" = 1'-0"

For Public Viewing Only-Not For Downloading

COMMONWEALTH ENGINEERS, INC.
A MBE/DBE/WBE/SBE/VBE/DVBE/SDVBE/ESB/MOBE/LGBT/SLBE/SDB/HUBZone/8(a) Certified Firm
https://commonwealthengineers.com/
MATTHEW R. MURRAY REGISTERED PE11500002 STATE OF INDIANA PROFESSIONAL ENGINEER
Signature
Date 10/03/2025
CE Solutions structural engineers
5500 Lakeside Blvd. Suite 330 Indianapolis, IN 46278
317.290.1549 ceindianapolis.com

TOWN OF NEWBURGH
WARRICK COUNTY, INDIANA

WASTEWATER TREATMENT PLANT FLOW EQ BASIN

© 2025 BY COMMONWEALTH ENGINEERS, INC. ALL RIGHTS RESERVED. REPRODUCTION BY ANY METHOD IN WHOLE OR IN PART WITHOUT PERMISSION IS PROHIBITED

Indiana811 Know what's below. 811 before you dig. 1-800-382-5544 (ITS THE LAW)

No.	Submittal / Revision	By	Date

Designed By:	Drawn By:	Checked By:
MRM	RMS	MRM
Issue Date:	Project No:	Scale:
10/03/2025	25-107	As indicated

TYPICAL STRUCTURAL DETAILS - STAIRS - 02

Drawing No: **S0-9**

Sheet: 88 OF 161

Saved: 10/2/2025 5:22:31 PM Current Local File: Autodesk Docs://Newburgh New WWTP EQ and Headworks\25-107_S0 GENERAL NOTES_v23.rvt

NOTE:

1. ALUMINUM SURFACES IN CONTACT WITH CONCRETE, GROUT, OR DISSIMILAR METALS SHALL BE PROTECTED WITH A COAT OF BITUMINOUS PAINT, MYLAR ISOLATORS OR OTHER APPROVED MATERIAL.

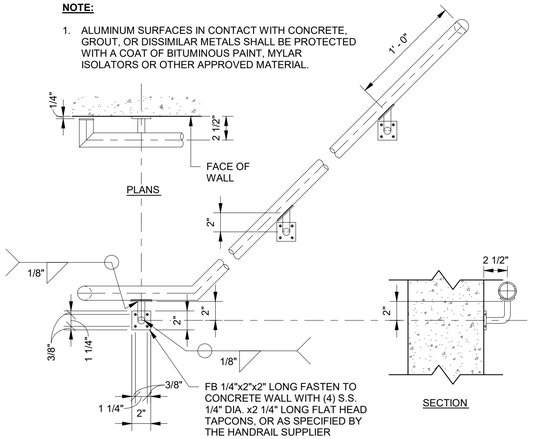

5 S0-10 TYP. HANDRAIL DETAIL

1 1/2" = 1'-0"

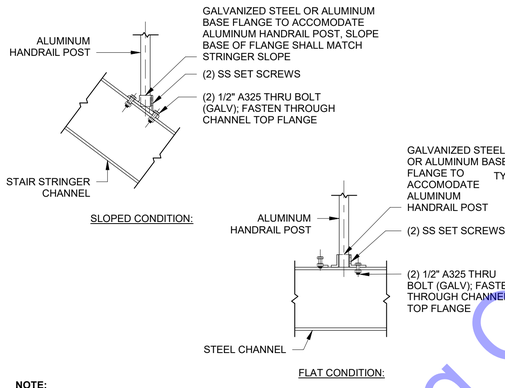

3 S0-10 TYP. CHANNEL TO WALL CONNECTION

1" = 1'-0"

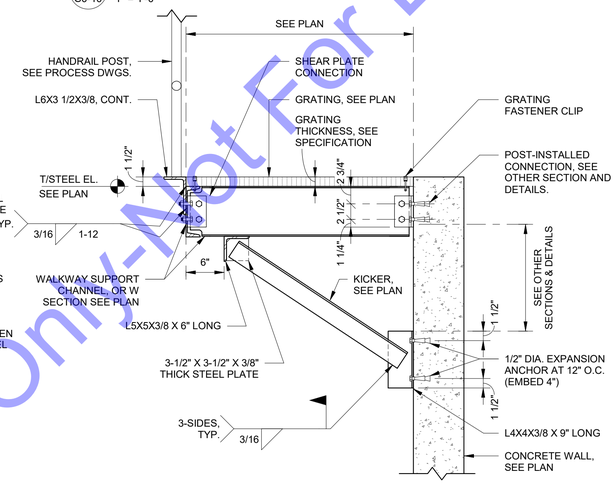

1 S0-10 TYP. CHANNEL TO CHANNEL CONNECTION - SHEAR PLATE

1" = 1'-0"

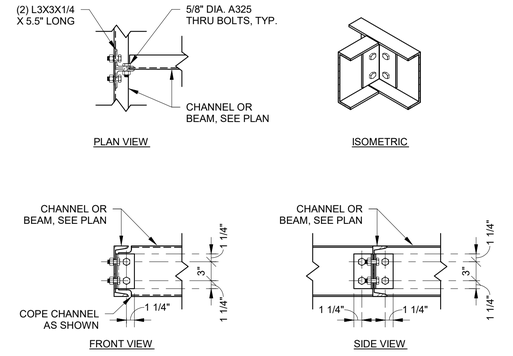

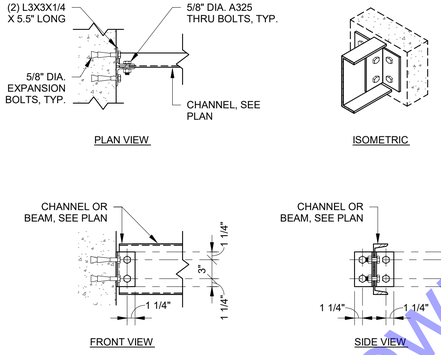

6 S0-10 HANDRAIL BASE FLANGE - AT STEEL

1" = 1'-0"

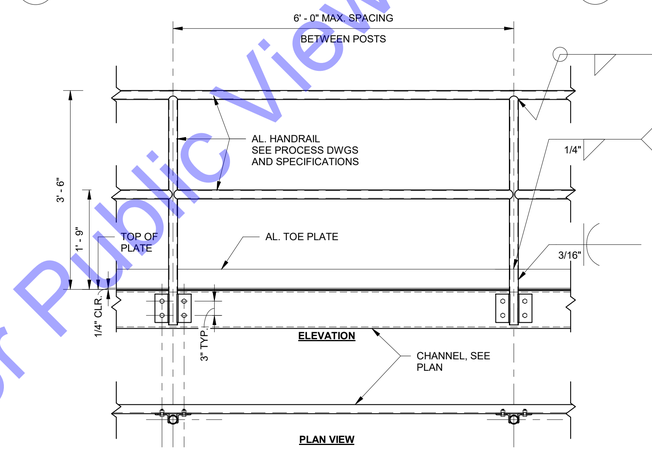

4 S0-10 TYP. WALKWAY ALONG WALL

1" = 1'-0"

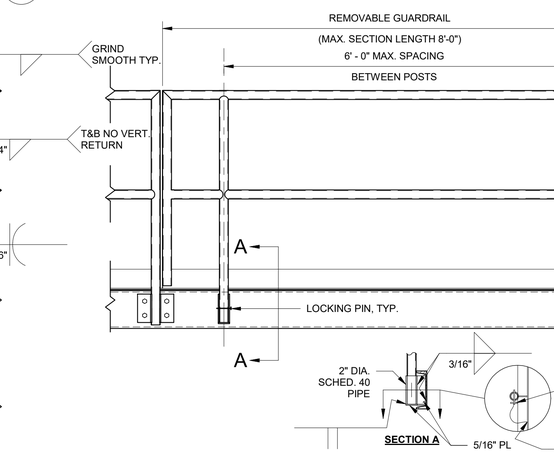

2 S0-10 TYP. CHANNEL TO CHANNEL CONNECTION - DOUBLE ANGLE

1" = 1'-0"

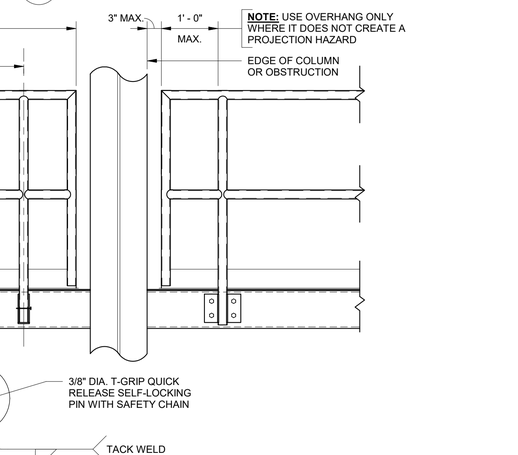

NOTE:

1. ALUMINUM SURFACES IN CONTACT WITH CONCRETE, GROUT, OR DISSIMILAR METALS SHALL BE PROTECTED WITH A COAT OF BITUMINOUS PAINT, MYLAR ISOLATORS OR OTHER APPROVED MATERIAL.

7 S0-10 TYPICAL GUARDRAIL ELEVATION (ALTERNATE ATTACHMENT)

3/4" = 1'-0"

For Public Viewing Only-Not For Downloading

COMMONWEALTH ENGINEERS, INC.
https://commonwealthengineers.com/
MATTHEW R. MURRAY REGISTERED PE11500002 STATE OF INDIANA PROFESSIONAL ENGINEER
10/03/2025
Signature Date
CE Solutions structural engineers
3500 Depauw Blvd, Suite 3080, Indianapolis, IN 46268 | 317.663.3636 | ceindianapolis.com

TOWN OF NEWBURGH
WARRICK COUNTY, INDIANA

WASTEWATER TREATMENT PLANT FLOW EQ BASIN

© 2025 BY COMMONWEALTH ENGINEERS, INC. ALL RIGHTS RESERVED. REPRODUCTION BY ANY METHOD IN WHOLE OR IN PART WITHOUT PERMISSION IS PROHIBITED

Indiana811 Know what's below. 811 before you dig. 1-800-382-5544 (ITS THE LAW)

No.	Submittal / Revision	By	Date

Designed By:	Drawn By:	Checked By:
MRM	RMS	MRM
Issue Date:	Project No:	Scale:
10/03/2025	25-107	As indicated

TYPICAL STRUCTURAL DETAILS - STAIRS - 03

Drawing No: **S0-10**

Sheet: 89 OF 161

Saved: 10/2/2025 5:22:33 PM Current Local File: Autodesk Docs://Newburgh New WWTP EQ and Headworks\25-107_S0 GENERAL NOTES_v23.rvt

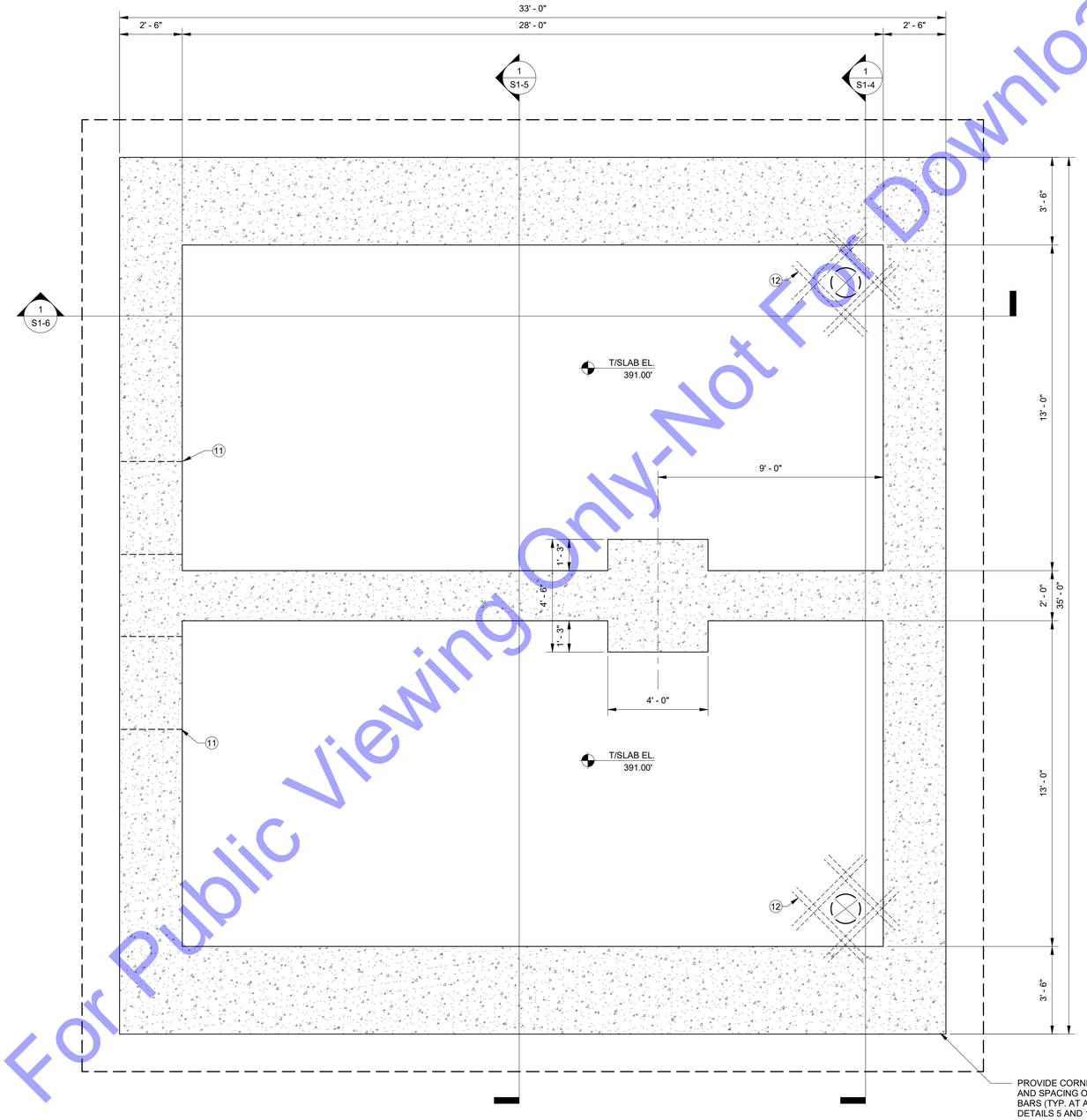

1 S1-1 FOUNDATION PLAN
3/8" = 1'-0"

FOUNDATION PLAN NOTES

◯ INDICATES NOTE REFERENCED IN PLAN

1. SEE THE S0-SERIES SHEETS FOR GENERAL STRUCTURAL NOTES AND TYPICAL STRUCTURAL DETAILS.
2. GENERAL CONTRACTOR TO COORDINATE ALL OPENING, PIPE SLEEVES, EMBEDDED ITEMS, HANDRAILS, GRATING, ETC. WITH THE PROCESS DRAWINGS.
3. ALL DIMENSIONS AND ELEVATIONS SHALL BE VERIFIED PRIOR TO FABRICATION, CONSTRUCTION OR ERECTION. THE GENERAL CONTRACTOR SHALL ASSUME RESPONSIBILITY FOR ANY DISCREPANCIES.
4. SEE SITE PLAN FOR ALL FINAL GRADE ELEVATIONS.
5. SEE GEOTECHNICAL REPORT FOR ALL BACKFILLING AND COMPACTION REQUIREMENTS BEHIND WALLS AND UNDER BASE SLABS.
6. GENERAL CONTRACTOR SHALL SUBMIT A CONSTRUCTION JOINT (CJ) AND CONTRACTION JOINT (CT) LOCATION PLAN TO THE STRUCTURAL ENGINEER FOR REVIEW PRIOR TO CONCRETE PLACEMENT.
7. SEE DETAILS 6/S0-3 AND 7/S0-3 FOR WALL CONSTRUCTION JOINT AND WALL CONTRACTION JOINT REQUIREMENTS. **100% OF THE HORIZONTAL REINFORCEMENT SHALL PASS THROUGH THE JOINT.**
8. MAINTAIN STRUCTURAL SLAB THICKNESSES AT ALL FLOOR SLOPES AND DEPRESSIONS.
9. SEE PROCESS AND MECHANICAL DRAWINGS FOR LOCATION OF EQUIPMENT PADS.
10. THE FOUNDATION DESIGNS SHOWN ARE BASED ON AN ALLOWABLE BEARING PRESSURE OF 4,000 PSF. ALL FOUNDATIONS SHALL BEAR ON SOIL IMPROVED BY THE INSTALLATION OF EITHER RAMMED AGGREGATE PIERS (RAP), OR CONTROLLED MODULUS COLUMNS (CMC) / RIGID INCLUSIONS – AT GENERAL CONTRACTOR'S OPTION. SEE SPECIFICATION FOR MORE INFORMATION.

(11) PIPE PENETRATION. SEE PROCESS DRAWINGS FOR OPENING SIZE, LOCATION, ELEVATION, SLEEVES, OTHER CONSTRUCTION REQUIREMENTS. SEE TYPICAL DETAILS 3/S0-3 FOR ADDITIONAL REINFORCEMENT REQUIRED AT OPENINGS. PROVIDE ADDITIONAL REINFORCEMENT AT ALL PENETRATIONS REQUIRED PER THE PROCESS DRAWINGS.

12. AT RE-ENTRANT SLAB CORNER CONDITIONS, PROVIDE (2) #5 x 4'-0" LONG BARS AT 3" O.C. PLACED 2" CLEAR FROM THE CORNER, TOP AND BOTTOM IN SLAB. UNLESS NOTED OTHERWISE.

NOTE - BACKFILL BEHIND CONCRETE WALLS:

1. BACKFILL SHALL BE PLACED SIMULTANEOUSLY ON OPPOSING SIDES OF THE STRUCTURE WHILE BACKFILLING.
2. WALL BACKFILL SHALL BE FREE DRAINING GRANULAR MATERIAL EXTENDING FROM THE BASE OF THE WALL AT A 45-DEGREE ANGLE FROM VERTICAL TO FINISHED GRADE.
3. SEE THE GEOTECHNICAL REPORT FOR BACKFILL COMPACTION REQUIREMENTS.

For Public Viewing Only-Not For Downloading

COMMONWEALTH ENGINEERS, INC.
https://commonwealthengineers.com/

MATTHEW R. MURRAY REGISTERED PE11500002 STATE OF INDIANA PROFESSIONAL ENGINEER
Signature Date 10/03/2025

CE Solutions structural engineers
cesolutionspc.com

TOWN OF NEWBURGH
WARRICK COUNTY, INDIANA

WASTEWATER TREATMENT
PLANT FLOW EQ BASIN

© 2025 BY COMMONWEALTH ENGINEERS, INC. ALL RIGHTS RESERVED. REPRODUCTION BY ANY METHOD IN WHOLE OR IN PART WITHOUT PERMISSION IS PROHIBITED

Indiana811 Know what's below. Call before you dig. 1-800-382-5544 (ITS THE LAW)

No.	Submittal / Revision	By	Date

Designed By:	Drawn By:	Checked By:
MRM	RMS	MRM
Issue Date:	Project No:	Scale:
10/03/2025	25-107	As indicated

NEW H2S REMOVAL FACILITY - FOUNDATION PLAN

Drawing No:
S1-1
Sheet: 90 OF 161

Saved: 10/2/2025 5:05:47 PM Current Local File: Autodesk Docs://Newburgh New WWTP EQ and Headworks/25-107_S1 INFLUENT STRUCT_v23.rvt

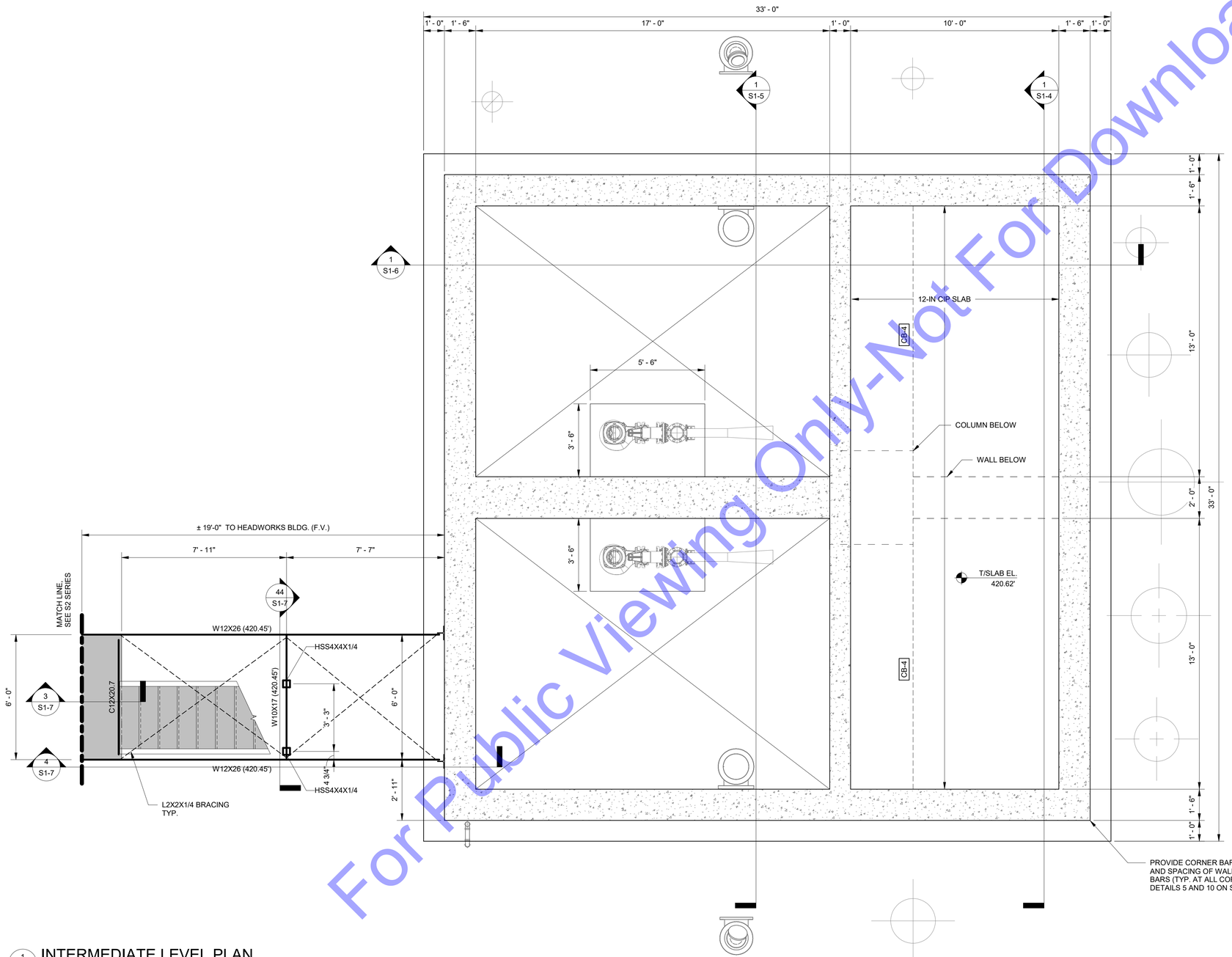

1 S1-2 INTERMEDIATE LEVEL PLAN
3/8" = 1'-0"

INTERMEDIATE LEVEL PLAN NOTES

◯ INDICATES NOTE REFERENCED IN PLAN

1. SEE THE S0-SERIES SHEETS FOR GENERAL STRUCTURAL NOTES AND TYPICAL STRUCTURAL DETAILS.
2. GENERAL CONTRACTOR TO COORDINATE ALL OPENING, PIPE SLEEVES, EMBEDDED ITEMS, HANDRAILS, GRATING, ETC. WITH THE PROCESS DRAWINGS.
3. ALL DIMENSIONS AND ELEVATIONS SHALL BE VERIFIED PRIOR TO FABRICATION, CONSTRUCTION OR ERECTION. THE GENERAL CONTRACTOR SHALL ASSUME RESPONSIBILITY FOR ANY DISCREPANCIES.
4. SEE SITE PLAN FOR ALL FINAL GRADE ELEVATIONS.
5. SEE GEOTECHNICAL REPORT FOR ALL BACKFILLING AND COMPACTION REQUIREMENTS BEHIND WALLS AND UNDER BASE SLABS.
6. GENERAL CONTRACTOR SHALL SUBMIT A CONSTRUCTION JOINT (CJ) AND CONTRACTION JOINT (CT) LOCATION PLAN TO THE STRUCTURAL ENGINEER FOR REVIEW PRIOR TO CONCRETE PLACEMENT.
7. SEE DETAILS 6/S0-3 AND 7/S0-3 FOR WALL CONSTRUCTION JOINT AND WALL CONTRACTION JOINT REQUIREMENTS. **100% OF THE HORIZONTAL REINFORCEMENT SHALL PASS THROUGH THE JOINT.**
8. MAINTAIN STRUCTURAL SLAB THICKNESSES AT ALL FLOOR SLOPES AND DEPRESSIONS.
9. ALL STRUCTURAL STEEL SHALL BE HOT-DIPPED GALVANIZED.
10. CB-X INDICATES BEAM MARK, SEE SECTIONS AND DETAILS FOR INFORMATION

For Public Viewing Only-Not For Download

COMMONWEALTH ENGINEERS, INC.
A network of resources to create a common goal.
https://commonwealthengineers.com/

MATTHEW R. MURRAY
REGISTERED
PE11500002
STATE OF INDIANA
PROFESSIONAL ENGINEER
Signature
10/03/2025
Date

CE Solutions
structural engineers
3550 Lexington Rd. Suite 300
Florence, IN 47020
ceisolutionsllc.com

TOWN OF NEWBURGH
WARRICK COUNTY, INDIANA

WASTEWATER TREATMENT
PLANT FLOW EQ BASIN

© 2025 BY COMMONWEALTH ENGINEERS, INC. ALL RIGHTS RESERVED. REPRODUCTION BY ANY METHOD IN WHOLE OR IN PART WITHOUT PERMISSION IS PROHIBITED

Indiana811 Know what's below. 811 before you dig. 1-800-382-5544 (ITS THE LAW)

No.	Submittal / Revision	By	Date

Designed By:	Drawn By:	Checked By:
MRM	RMS	MRM
Issue Date:	Project No:	Scale:
10/03/2025	25-107	As indicated

NEW H2S REMOVAL FACILITY - INTERMEDIATE LEVEL PLAN

Drawing No:
S1-2
Sheet: 91 OF 161

Saved: 10/2/2025 5:05:48 PM Current Local File: Autodesk Docs://Newburgh New WWTP EQ and Headworks/25-107_S1 INFLUENT STRUCT_v23.rvt

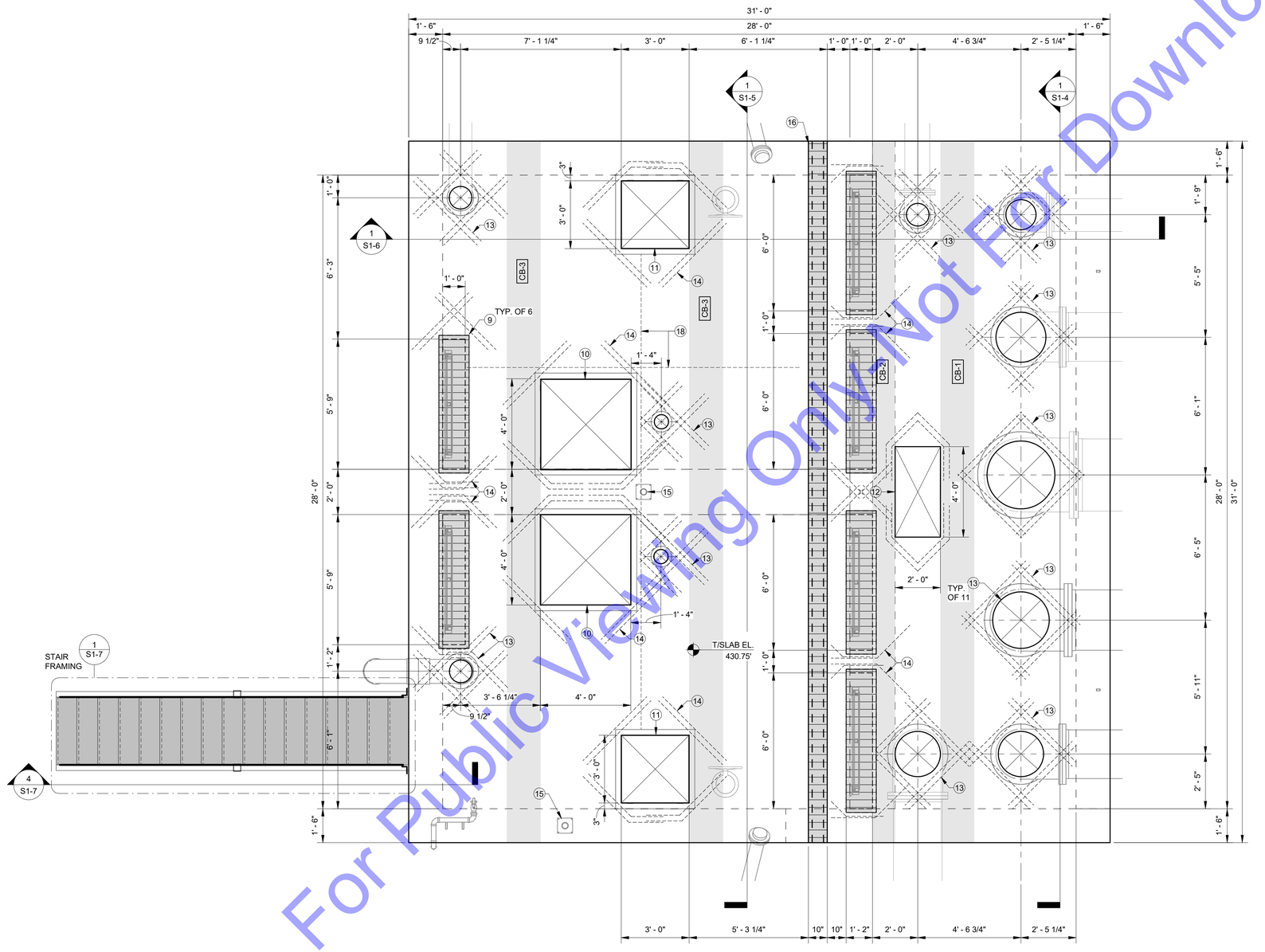

1 S1-3 UPPER LEVEL PLAN
3/8" = 1'-0"

UPPER LEVEL PLAN NOTES

◯ INDICATES NOTE REFERENCED IN PLAN

1. SEE THE S0-SERIES SHEETS FOR GENERAL STRUCTURAL NOTES AND TYPICAL STRUCTURAL DETAILS.
2. GENERAL CONTRACTOR TO COORDINATE ALL OPENING, PIPE SLEEVES, EMBEDDED ITEMS, HANDRAILS, GRATING, ETC. WITH THE PROCESS DRAWINGS.
3. ALL DIMENSIONS AND ELEVATIONS SHALL BE VERIFIED PRIOR TO FABRICATION, CONSTRUCTION OR ERECTION. THE GENERAL CONTRACTOR SHALL ASSUME RESPONSIBILITY FOR ANY DISCREPANCIES.
4. SEE SITE PLAN FOR ALL FINAL GRADE ELEVATIONS.
5. SEE GEOTECHNICAL REPORT FOR ALL BACKFILLING AND COMPACTION REQUIREMENTS BEHIND WALLS AND UNDER BASE SLABS.
6. GENERAL CONTRACTOR SHALL SUBMIT A CONSTRUCTION JOINT (CJ) AND CONTRACTION JOINT (CT) LOCATION PLAN TO THE STRUCTURAL ENGINEER FOR REVIEW PRIOR TO CONCRETE PLACEMENT.
7. SEE DETAILS 6/S0-3 AND 7/S0-3 FOR WALL CONSTRUCTION JOINT AND WALL CONTRACTION JOINT REQUIREMENTS. **100% OF THE HORIZONTAL REINFORCEMENT SHALL PASS THROUGH THE JOINT.**
8. MAINTAIN STRUCTURAL SLAB THICKNESSES AT ALL FLOOR SLOPES AND DEPRESSIONS.

(9) SLIDE GATE OPENING, SEE PROCESS DRAWINGS FOR INFORMATION. OPENING SIZE AND GATE SUPPORT SHALL BE COORDINATED WITH THE SELECTED GATE MANUFACTURER. THE OPENING SHALL BE COVERED WITH 2" HEAVY DUTY, ALUMINUM PLANK (UNPUNCHED), UNLESS NOTED OTHERWISE. SEE SPECIFICATION SECTIONS "WM 19 - MISCELLANEOUS METALS AND ALUMINUM" AND TYPICAL DETAILS FOR ADDITIONAL INFORMATION. THE GENREAL CONTRACTOR IS RESPONSIBLE FOR COORDINATING ANY MODIFICATIONS TO THE ALUMINUM PLANK COVER AS REQUIRED BY THE SLIDE GATE MANUFACTURER.

(10) 48" X 48" ACCESS HATCH, SEE PROCCESS DRAWINGS. THE GENERAL CONTRACTOR SHALL COORDINATE HATCH FRAME INSTALLATION WITH REINFORCEMENT REQUIREMENTS.

(11) 36" X 36" ACCESS HATCH, SEE PROCCESS DRAWINGS. THE GENERAL CONTRACTOR SHALL COORDINATE HATCH FRAME INSTALLATION WITH REINFORCEMENT REQUIREMENTS.

(12) 24" X 48" ACCESS HATCH, SEE PROCCESS DRAWINGS. THE GENERAL CONTRACTOR SHALL COORDINATE HATCH FRAME INSTALLATION WITH REINFORCEMENT REQUIREMENTS.

(13) PIPE PENETRATION, SEE PROCESS DRAWINGS FOR PIPE/ OPENINGS SIZE AND LOCATIONS SEE 3/S0-3 FOR ADDITIONAL REINFORCEMENT.

(14) AT RE-ENTRANT SLAB CORNER CONDITIONS, PROVIDE (2) #5 x 4'-0" LONG BARS AT 3" O.C. PLACED 2" CLEAR FROM THE CORNER, TOP AND BOTTOM IN SLAB. UNLESS NOTED OTHERWISE.

(15) DAVIT CRANE, SEE PROCESS DRAWINGS. ATTACHMENT OF THE DAVIT CRANE TO THE CONCRETE STRUCTURE BY MANUFACTURER. PRIOR TO INSTALLING THE DAVIT CRANE BASE ANCHORS, THE GENERAL CONTRACTOR SHALL SCAN THE CONCRETE SLAB TO LOCATE EXISTING REINFORCEMENT IN ORDER AVOID DAMAGING OR DISTURBING IT.

(16) TRENCH, SEE PROCESS DRAWINGS. THE TRENCH SHALL BE COVERED WITH 2" HEAVY DUTY, ALUMINUM PLANK (UNPUNCHED), UNLESS NOTED OTHERWISE. SEE SPECIFICATION SECTIONS "WM 19 - MISCELLANEOUS METALS AND ALUMINUM" AND TYPICAL DETAILS FOR ADDITIONAL INFORMATION

(17) CB-X INDICATES BEAM MARK, SEE SECTIONS AND DETAILS FOR INFORMATION

18. ADD HALF OF INTERRUPTED REINFORCEMENT BARS TO EACH SIDE OF FLOOR OPENINGS (TYP. AT ALL OPENINGS).

For Public Viewing Only | Not For Downloading

COMMONWEALTH ENGINEERS, INC.
A MEMBER OF RESOURCES IN MOTION® COMPANIES
https://commonwealthengineers.com/

MATTHEW R. MURRAY
REGISTERED
PE11500002
STATE OF INDIANA
PROFESSIONAL ENGINEER
Matt Murray 10/03/2025
Signature Date

CE Solutions
structural engineers
3333 Vincennes Road, Suite 300
Indianapolis, IN 46268
cesolutionsinc.com

TOWN OF NEWBURGH
WARRICK COUNTY, INDIANA

WASTEWATER TREATMENT
PLANT FLOW EQ BASIN

© 2025 BY COMMONWEALTH ENGINEERS, INC. ALL RIGHTS RESERVED. REPRODUCTION BY ANY METHOD IN WHOLE OR IN PART WITHOUT PERMISSION IS PROHIBITED

Indiana811 Know what's below. Dig before you dig. 1-800-382-5544 (ITS THE LAW)

No.	Submittal / Revision	By	Date

Designed By:	Drawn By:	Checked By:
MRM	RMS	MRM
Issue Date:	Project No:	Scale:
10/03/2025	25-107	As indicated

NEW H2S REMOVAL FACILITY - UPPER LEVEL PLAN

Drawing No:
S1-3
Sheet: 92 OF 161

Saved: 10/2/2025 5:05:51 PM Current Local File: Autodesk Docs://Newburgh New WWTP EQ and Headworks/25-107_S1 INFLUENT STRUCT_v23.rvt

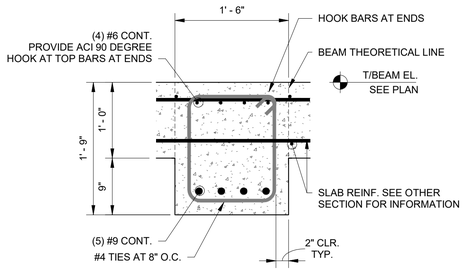

2 S1-4 BEAM CB-1 DETAIL

1" = 1'-0"

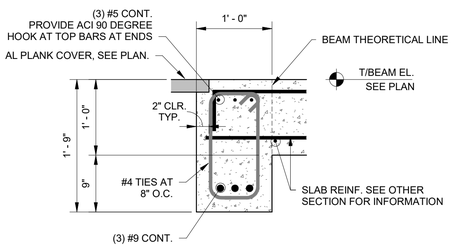

3 S1-4 BEAM CB-2 DETAIL

1" = 1'-0"

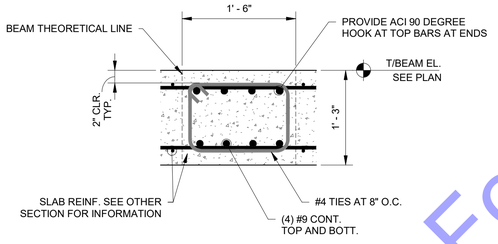

4 S1-4 BEAM CB-3 DETAIL

1" = 1'-0"

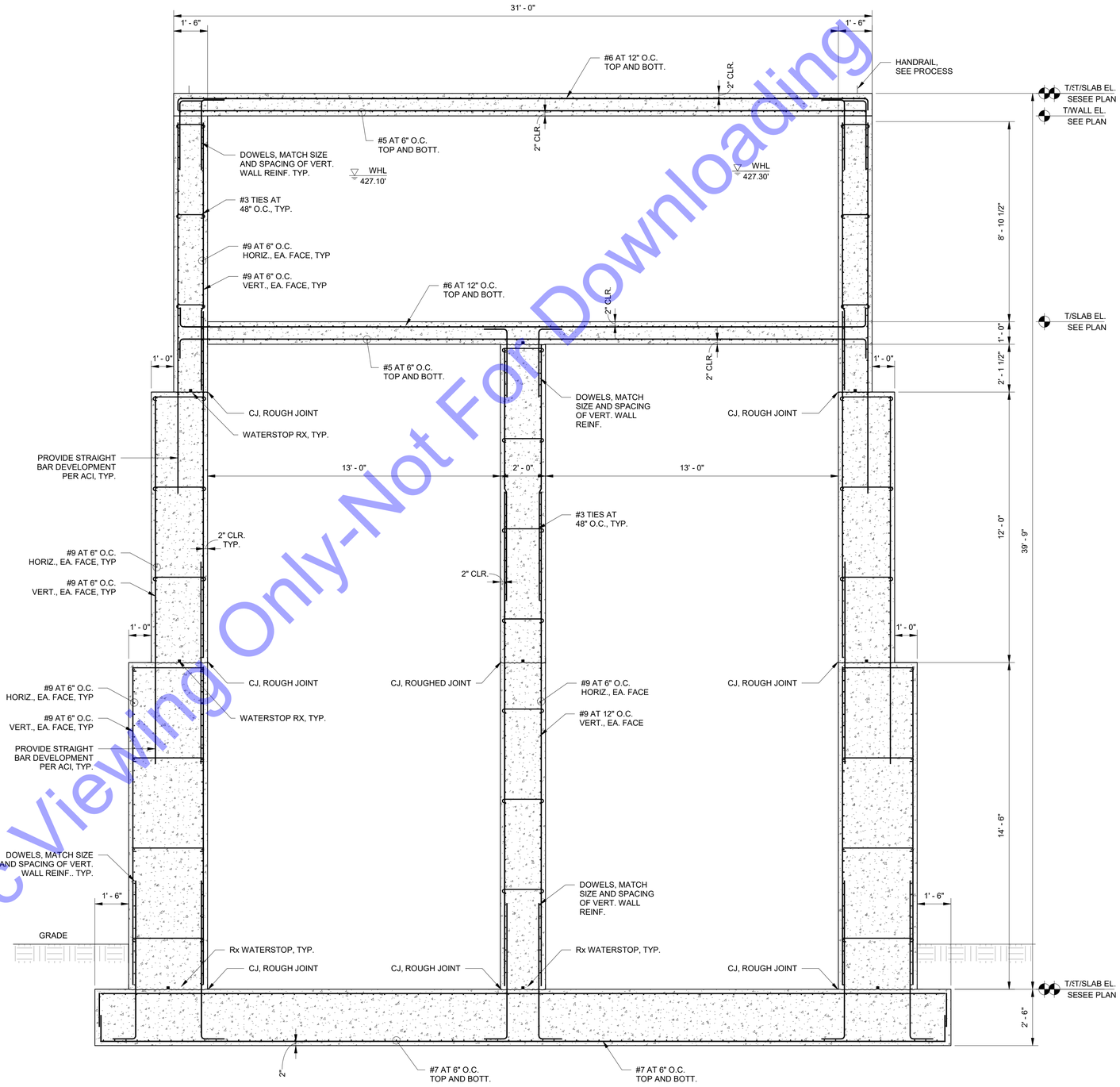

1 S1-4 SECTION

3/8" = 1'-0"

For Public Viewing Only-Not For Downloading

COMMONWEALTH ENGINEERS, INC.
A network of resources to create a common goal.
https://commonwealthengineers.com/

MATTHEW R. MURRAY
REGISTERED
PE11500002
STATE OF
INDIANA
PROFESSIONAL ENGINEER
10/03/2025
Signature Date

CE Solutions
structural engineers
2000 Duke St. Suite 300
Floyd, IN 47150
ceindiana.com

TOWN OF NEWBURGH
WARRICK COUNTY, INDIANA

WASTEWATER TREATMENT
PLANT FLOW EQ BASIN

© 2025 BY COMMONWEALTH ENGINEERS, INC. ALL RIGHTS RESERVED. REPRODUCTION BY ANY METHOD IN WHOLE OR IN PART WITHOUT PERMISSION IS PROHIBITED

Indiana811 Know what's below. 811 before you dig.
1-800-382-5544
(ITS THE LAW)

No.	Submittal / Revision	By	Date

Designed By:	Drawn By:	Checked By:
MRM	RMS	MRM
Issue Date:	Project No:	Scale:
10/03/2025	25-107	As indicated

NEW H2S REMOVAL FACILITY - SECTIONS AND DETAILS

Drawing No:
S1-4
Sheet: 93 OF 161

Saved: 10/2/2025 5:05:52 PM Current Local File: Autodesk Docs://Newburgh New WWTP EQ and Headworks/25-107_S1 INFLUENT STRUCT_v23.rvt

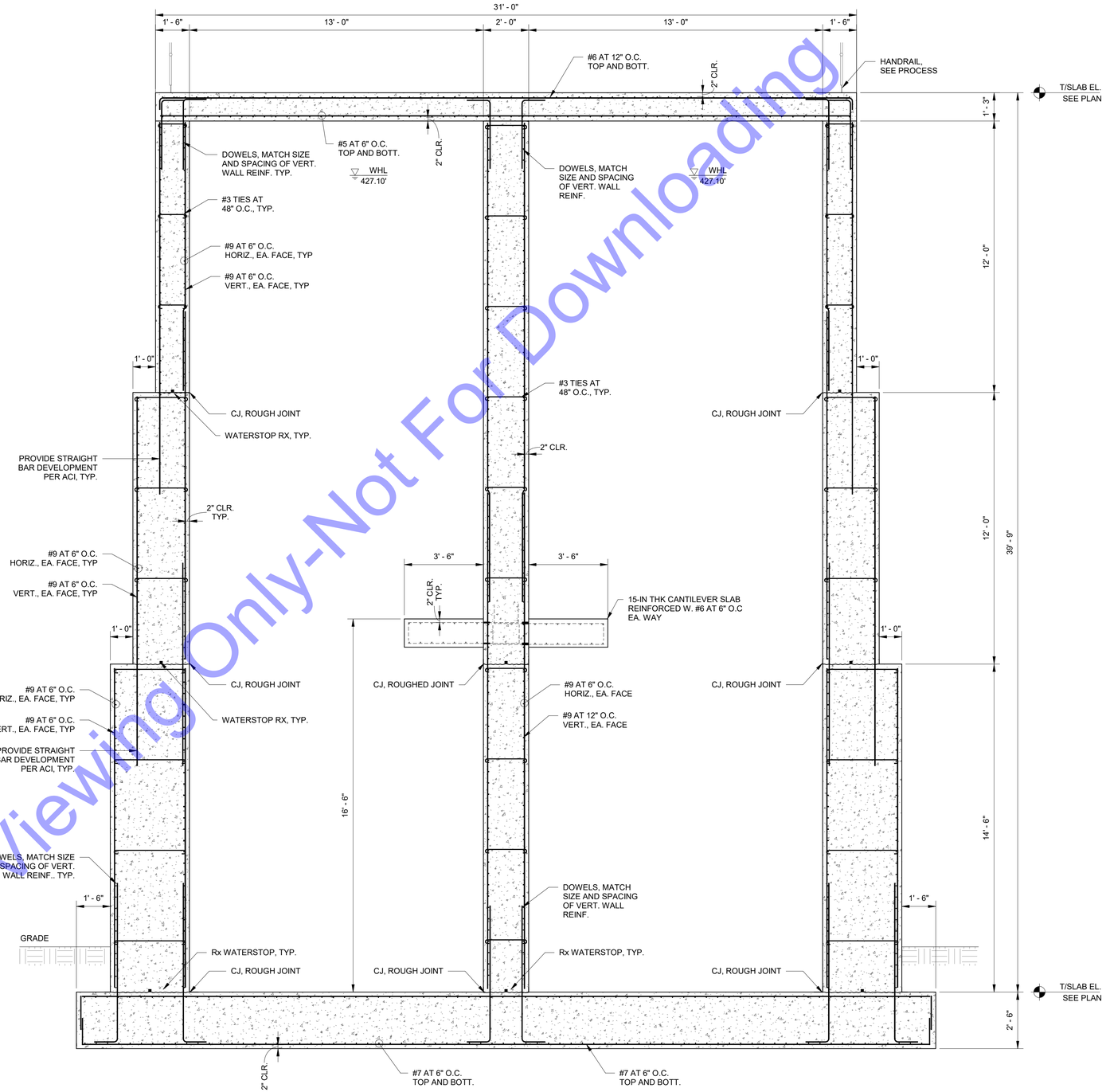

1 S1-5 SECTION
3/8" = 1'-0"

For Public Viewing Only-Not For Downloading

Saved: 10/2/2025 5:05:53 PM Current Local File: Autodesk Docs://Newburgh New WWTP EQ and Headworks/25-107_S1 INFLUENT STRUCT_v23.rvt

COMMONWEALTH ENGINEERS, INC.
A wealth of resources to make a common goal.
https://commonwealthengineers.com/

MATTHEW R. MURRAY
REGISTERED
PE11500002
STATE OF INDIANA
PROFESSIONAL ENGINEER
Matt Murray 10/03/2025
Signature Date

CE Solutions
structural engineers
8770 North St., Ste. 100
Fishers, IN 46038
317.818.1912
cesolutionsinc.com

TOWN OF NEWBURGH
WARRICK COUNTY, INDIANA

WASTEWATER TREATMENT
PLANT FLOW EQ BASIN

© 2025 BY COMMONWEALTH ENGINEERS, INC. ALL RIGHTS RESERVED. REPRODUCTION BY ANY METHOD IN WHOLE OR IN PART WITHOUT PERMISSION IS PROHIBITED

Indiana 811
Know what's below. 811 before you dig.
1-800-382-5544
(ITS THE LAW)

No.	Submittal / Revision	By	Date

Designed By:	Drawn By:	Checked By:
MRM	RMS	MRM
Issue Date:	Project No:	Scale:
10/03/2025	25-107	3/8" = 1'-0"

NEW H2S REMOVAL FACILITY - SECTIONS AND DETAILS

Drawing No:
S1-5

Sheet: 94 OF 161

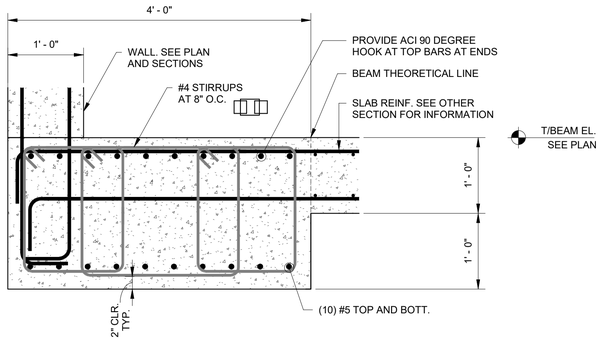

3 S1-6 BEAM CB-4 DETAIL
1" = 1'-0"

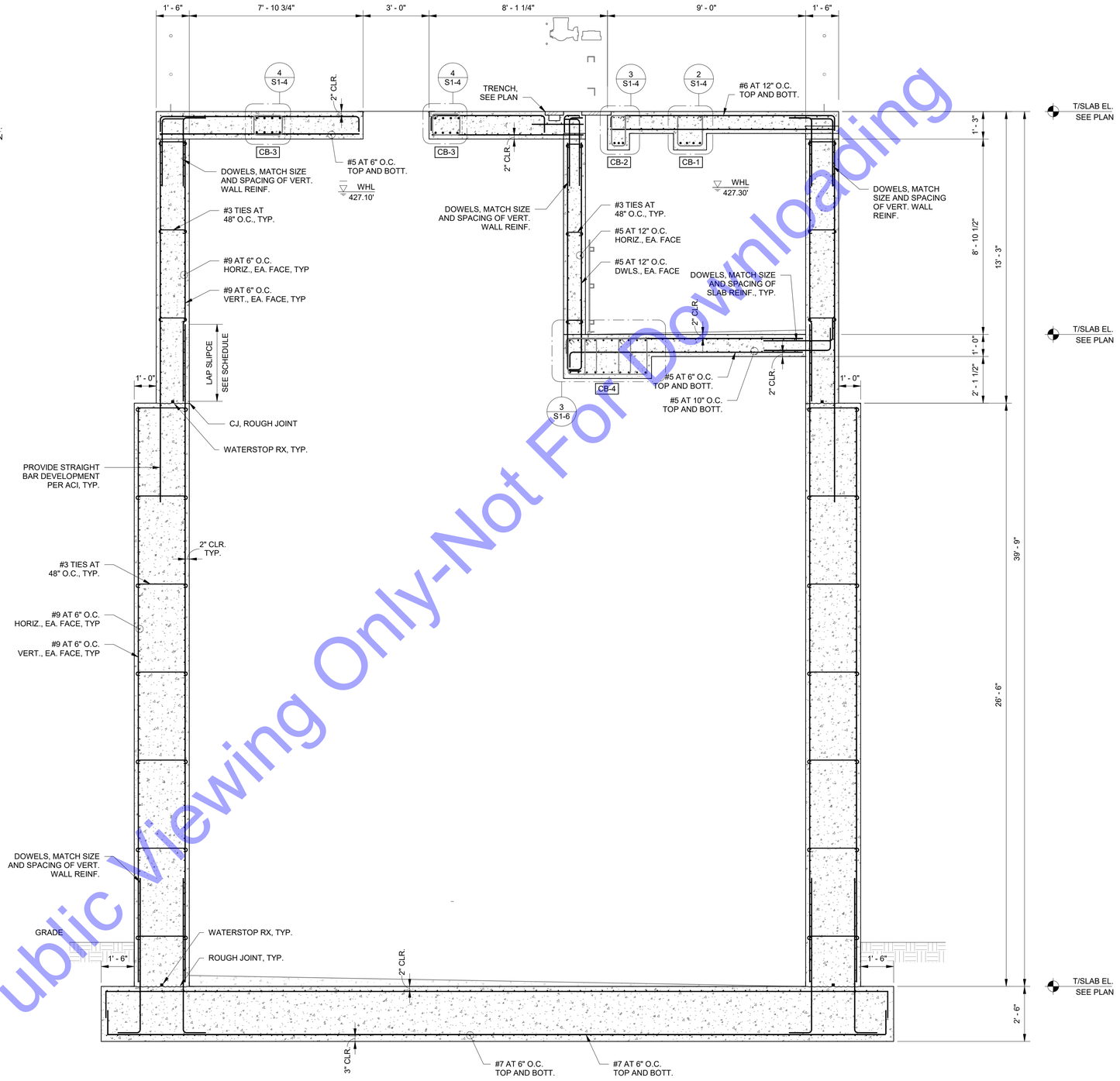

1 S1-6 SECTION
3/8" = 1'-0"

For Public Viewing Only-Not For Downloading

COMMONWEALTH ENGINEERS, INC.
A network of resources to create a common good.
https://commonwealthengineers.com/

MATTHEW R. MURRAY
REGISTERED
PE11500002
STATE OF INDIANA
PROFESSIONAL ENGINEER
Signature 10/03/2025 Date

CE Solutions
structural engineers
3333 Ridge Pike, Suite 330
Fishers, IN 46038
ceindianapolis.com

TOWN OF NEWBURGH
WARRICK COUNTY, INDIANA

WASTEWATER TREATMENT
PLANT FLOW EQ BASIN

© 2025 BY COMMONWEALTH ENGINEERS, INC. ALL RIGHTS RESERVED. REPRODUCTION BY ANY METHOD IN WHOLE OR IN PART WITHOUT PERMISSION IS PROHIBITED

Indiana811 Know what's below. Call before you dig. 1-800-382-5544 (ITS THE LAW)

No.	Submittal / Revision	By	Date

Designed By:	Drawn By:	Checked By:
MRM	RMS	MRM
Issue Date:	Project No:	Scale:
10/03/2025	25-107	As indicated

NEW H2S REMOVAL FACILITY - SECTIONS AND DETAILS

Drawing No:
S1-6
Sheet: 95 OF 161

Saved: 10/2/2025 5:05:54 PM Current Local File: Autodesk Docs://Newburgh New WWTP EQ and Headworks/25-107_S1 INFLUENT STRUCT_v23.rvt

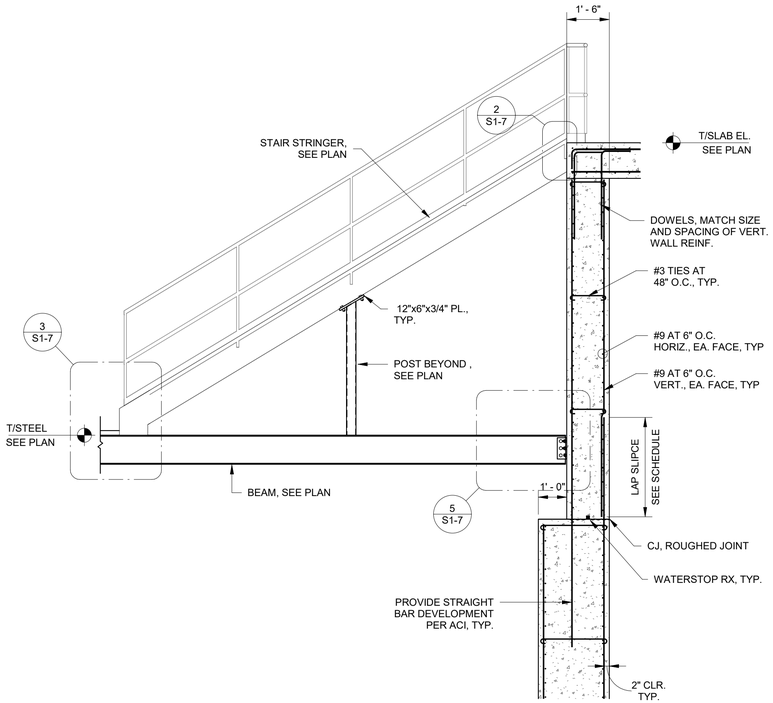

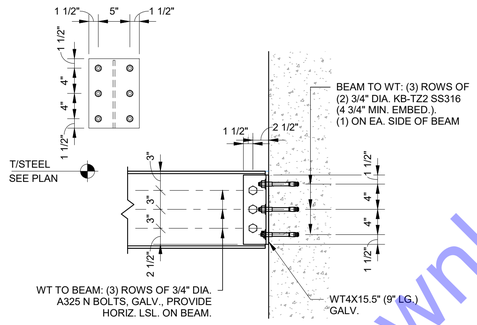

STAIR FRAMING PLAN NOTES

○ INDICATES NOTE REFERENCED IN PLAN

1. SEE THE S0-SERIES SHEETS FOR GENERAL STRUCTURAL NOTES AND TYPICAL STRUCTURAL DETAILS.
2. ALL DIMENSIONS AND ELEVATIONS SHALL BE VERIFIED PRIOR TO FABRICATION, CONSTRUCTION OR ERECTION. THE GENERAL CONTRACTOR SHALL ASSUME RESPONSIBILITY FOR ANY DISCREPANCIES.
3. SEE SITE PLAN FOR ALL FINAL GRADE ELEVATIONS.
4. ALL STEEL SHALL BE GALVANIZED.
5. SEE PLAN FOR STEEL STAIR STRINGER MIN. SIZE REQUIREMENTS. STEEL FABRICATOR SHALL DETERMINE REQUIRED STAIR STRINGER PROFILE TO ACCOMMODATE PROVIDED STAIR LENGTH DIMENSIONS AND ELEVATION CHANGE.
6. STAIR TREADS SHALL BE 1-3/4" THICK X 9" WIDE TYPE "F", PUNCHED, HEAVY DUTY ALUMINUM PLANK UNLESS OTHERWISE NOTED. CONTRACTOR SHALL DETERMINE REQUIRED STAIR STRINGER RISE / RUN LAYOUT. SEE TYPICAL STAIR DETAILS AND SPECIFICATIONS FOR ADDITIONAL INFORMATION.
7. STAIR LANDING AT STEEL FRAMED PLATFORM OFF THE NORTH WALL OF THE HEADWORKS BUILDING. SEE S2-SERIES FOR INFORMATION.
8. PROVIDE L2X2X1/4 DIAGONAL BRACE AT 5'-0" O.C. MAX ALONG ALL STAIR FLIGHTS AND AT EACH STAIR LANDING; WELD L2X2X1/4 BRACE MEMBERS TO STRINGER BOTTOM FLANGES.

MANDATORY ALTERNANTE (MA-2)
REPLACE ALL GALVANIZED STRUCTURAL STEEL ASSOCIATED WITH THE EXTERIOR STAIRS AND PLATFORM ASSEMBLIES WITH TYPE 316 STAINLESS STEEL. THIS INCLUDES, BUT IS NOT LIMITED TO, STRINGERS, CHANNELS, WIDE-FLANGE BEAMS, PLATES, ANGLES, BOLTS, AND ALL OTHER STRUCTURAL STEEL COMPONENTS THAT ARE PART OF EACH ASSEMBLY. REFER TO SPECIFICASTION DS-29 FOR INFORMATION.

5 S1-7 BEAM TO CONC. WALL CONNECTION
1" = 1'-0"

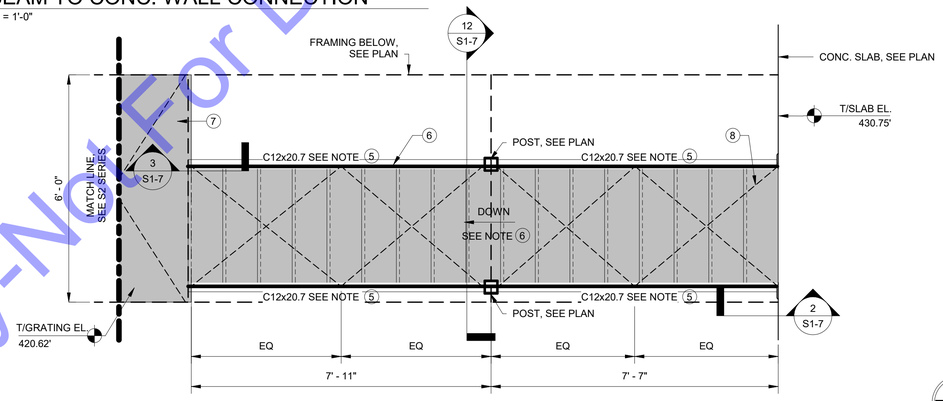

4 S1-7 SECTION
3/8" = 1'-0"

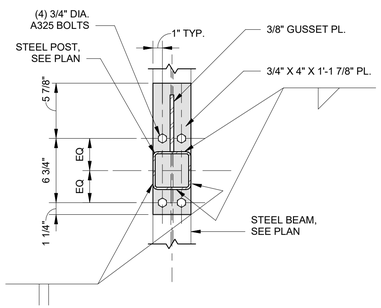

SECTION A
SCALE: 1 1/2" = 1'-0"

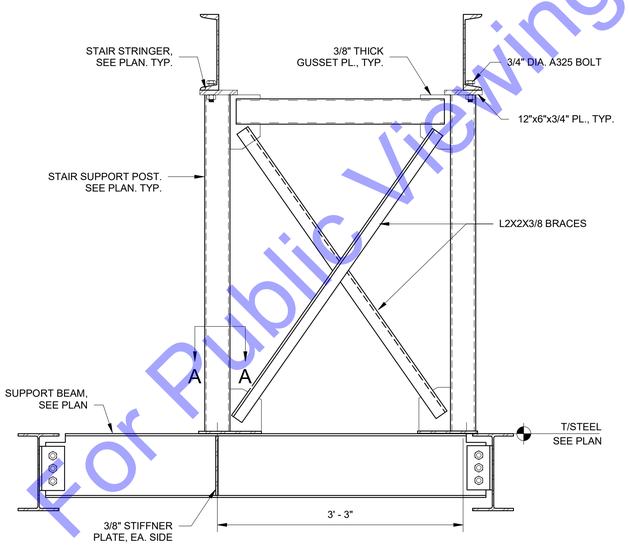

44 S1-7 SECTION AT STAIR LANDING
1" = 1'-0"

1 S1-7 STAIR FRAMING PLAN
1/2" = 1'-0"

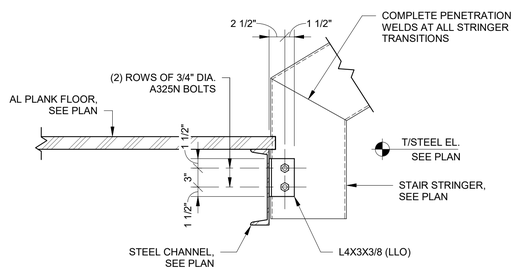

3 S1-7 STRINGER TO PLATFORM BEAM CONNECTION DETAIL
1" = 1'-0"

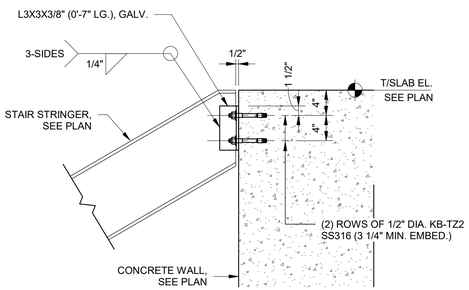

2 S1-7 STAIR STRINGER TO CONCRETE WALL CONNECTION
1" = 1'-0"

For Public Viewing Only-Not For Download

COMMONWEALTH ENGINEERS, INC.
https://commonwealthengineers.com/
MATTHEW R. MURRAY
REGISTERED
PE11500002
STATE OF INDIANA
PROFESSIONAL ENGINEER
10/03/2025
Signature Date
CE Solutions structural engineers
CESolutionsIN.com

TOWN OF NEWBURGH
WARRICK COUNTY, INDIANA

WASTEWATER TREATMENT
PLANT FLOW EQ BASIN

© 2025 BY COMMONWEALTH ENGINEERS, INC. ALL RIGHTS RESERVED. REPRODUCTION BY ANY METHOD IN WHOLE OR IN PART WITHOUT PERMISSION IS PROHIBITED

Indiana 811 Know what's below. 811 before you dig. 1-800-382-5544 (ITS THE LAW)

No.	Submittal / Revision	By	Date

Designed By:	Drawn By:	Checked By:
JTM	JTM	MRM
Issue Date:	Project No:	Scale:
10/03/2025	25-107	As indicated

NEW H2S REMOVAL FACILITY - STAIR FRAMING PLANS

Drawing No:
S1-7
Sheet: 96 OF 161

Saved: 10/2/2025 5:05:56 PM Current Local File: Autodesk Docs://Newburgh New WWTP EQ and Headworks/25-107_S1 INFLUENT STRUCT_v23.rvt

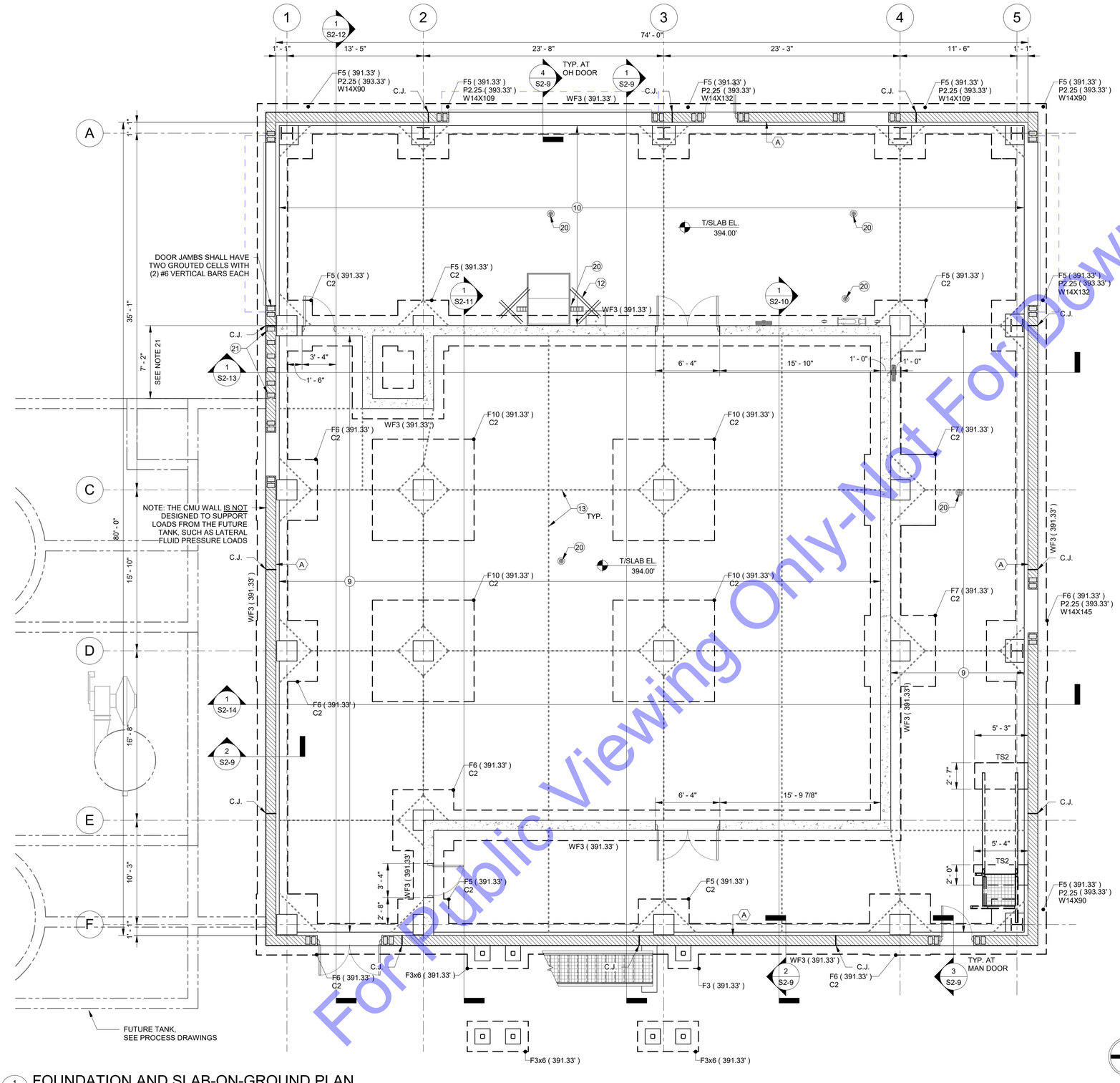

1 S2-1 FOUNDATION AND SLAB-ON-GROUND PLAN

3/16" = 1'-0"

FOUNDATION PLAN NOTES

◯ INDICATES NOTE REFERENCED IN PLAN

1. SEE THE S0-SERIES SHEETS FOR GENERAL STRUCTURAL NOTES AND TYPICAL STRUCTURAL DETAILS.
2. T/SLAB ELEVATION = SEE PLAN
   T/FOOTING ELEVATION = SEE PLAN
   T/PEDESTAL ELEVATION = SEE PLAN
3. GENERAL CONTRACTOR TO COORDINATE ALL OPENING, PIPE SLEEVES, EMBEDDED ITEMS, HANDRAILS, GRATING, ETC. WITH THE PROCESS DRAWINGS.
4. ALL DIMENSIONS AND ELEVATIONS SHALL BE VERIFIED PRIOR TO FABRICATION, CONSTRUCTION OR ERECTION. THE GENERAL CONTRACTOR SHALL ASSUME RESPONSIBILITY FOR ANY DISCREPANCIES.
5. SEE SITE PLAN FOR ALL FINAL GRADE ELEVATIONS.
6. SEE GEOTECHNICAL REPORT FOR ALL BACKFILLING AND COMPACTION REQUIREMENTS BEHIND WALLS AND UNDER BASE SLABS.
7. FX (XXX.XX') OR WFX (XXX.XX') DENOTES FOOTING MARK AND ELEVATION, SEE FOOTING SCHEDULES.
8. PX (XXX.XX') OR CX (XXX.XX') DENOTES PEDESTAL OR CONCRETE COLUMN MARK AND ELEVATION, SEE PEDESTAL / CONCRETE COLUMN SCHEDULE.
9. FLOOR SLAB SHALL CONSIST OF A 6-INCH CONCRETE SLAB-ON-GROUND OVER COMPACTED AGGREGATE FILL AND A 10-MIL VAPOR RETARDER. REINFORCE SLAB WITH SYNTHETIC FIBERS AS INDICATED IN THE GENERAL STRUCTURAL NOTES.
10. FLOOR SLAB SHALL CONSIST OF AN 8-INCH CONCRETE SLAB-ON-GROUND OVER COMPACTED AGGREGATE FILL AND A 10-MIL VAPOR RETARDER. REINFORCE SLAB WITH SYNTHETIC FIBERS AS INDICATED IN THE GENERAL STRUCTURAL NOTES.
11. MAINTAIN STRUCTURAL SLAB THICKNESSES AT ALL FLOOR SLOPES AND DEPRESSIONS.
12. AT RE-ENTRANT SLAB CORNER CONDITIONS, PROVIDE (2) #4 x 4'-0" LONG AT 3-INCHES O.C. PLACED 2-INCHES CLEAR FROM CORNER, CENTERED IN SLAB, TYPICAL.
13. SAW CUT OR WET CUT CONTRACTION JOINTS IN SLABS AS SHOWN ON PLANS. WET CUTS ARE TO BE MADE AFTER FINAL FLOATING WHILE CONCRETE IS STILL PLIABLE. SAW CUTS ARE TO BE MADE AS SOON AS PRACTICAL AFTER FINAL HARD TROWELING BUT MUST BE COMPLETED WITHIN 2-HOURS OF FINAL TROWELING. SEE TYPICAL CONCRETE DETAILS FOR TYPICAL SLAB-ON-GROUND CONSTRUCTION AND CONTRACTION JOINT DETAILS.
14. GENERAL CONTRACTOR SHALL SUBMIT A CONCRETE WALL CONSTRUCTION JOINT (CJ) AND CONTRACTION JOINT (CT) LOCATION PLAN TO THE STRUCTURAL ENGINEER FOR REVIEW PRIOR TO CONCRETE PLACEMENT.
15. SEE DETAILS 6/S0-3 AND 7/S0-3 FOR CONCRETE WALL CONSTRUCTION JOINT AND WALL CONTRACTION JOINT REQUIREMENTS.
16. (X) DENOTES MASONRY WALL TYPE, SEE SCHEDULE ON SHEET S2-3.
17. "C.J." INDICATES CMU WALL CONTROL JOINT, SEE ARCH. DRAWINGS AND TYP. DETAILS.
18. SEE PROCESS AND MECHANICAL DRAWINGS FOR LOCATION OF EQUIPMENT PADS.
19. ALL STRUCTURAL STEEL SHALL BE HOT-DIP GALVANIZED.
20. SEE PROCESS DRAWINGS FOR FLOOR DRAIN AND TRENCH DRAIN LOCATIONS AND REQUIRED FLOOR SLOPE TO THE DRAINS.
21. WHERE INDICATED ON PLAN, VERTICAL REINFORCEMENT FOR 12" CMU WALL SHALL BE (2) #6 BARS AT 16" O.C.
22. THE FOUNDATION DESIGNS SHOWN ARE BASED ON AN ALLOWABLE BEARING PRESSURE OF 4,000 PSF. ALL FOUNDATIONS SHALL BEAR ON SOIL IMPROVED BY THE INSTALLATION OF EITHER RAMMED AGGREGATE PIERS (RAP), OR CONTROLLED MODULUS COLUMNS (CMC) / RIGID INCLUSIONS – AT GENERAL CONTRACTOR'S OPTION. SEE SPECIFICATION FOR MORE INFORMATION.

SPREAD FOOTING SCHEDULE

MARK	WIDTH	LENGTH	THICK.	BOTT. LONG. REINF.	BOTT. TRANS. REINF.
F3	3'-0"	3'-0"	1'-0"	4 - #4	4 - #4
F3x6	3'-0"	6'-0"	1'-0"	3 - #5	6 - #5
F4	4'-0"	4'-0"	1'-0"	6 - #4	6 - #4
F5	5'-0"	5'-0"	1'-0"	11 - #4	11 - #4
F6	6'-0"	6'-0"	1'-3"	9 - #5	9 - #5
F7	7'-0"	7'-0"	1'-6"	10 -#5	10 -#5
F8	8'-0"	8'-0"	1'-9"	9 - #6	9 - #6
F9	9'-0"	9'-0"	2'-0"	11 - #6	11 - #6
F10	10'-0"	10'-0"	2'-0"	12 - #6	12 - #6

WALL FOOTING SCHEDULE

MARK	WIDTH	LENGTH	THICK.	BOTT. LONG. REINF.	BOTT. TRANS. REINF.
WF2	2'-0"	CONT.	1'-0"	2 - #5	#5 AT 12" O.C.
WF3	3'-0"	CONT.	1'-0"	3 - #5	#5 AT 12" O.C.

THICKENED SLAB SCHEDULE

MARK	WIDTH	LENGTH	THICK.	BOTT. LONG. REINF.	BOTT. TRANS. REINF.
TS2	SEE PLAN	SEE PLAN	1'-0"	2 - #5	#5 AT 12" O.C.

PEDESTAL / CONCRETE COLUMN SCHEDULE

MARK	WIDTH	LENGTH	TYPE	V. REINF.	TIES	REFERENCE
P2.25	2'-3"	2'-3"	C	12 - #7	3 x #3 AT 3" O.C. TOP, #3 AT 12" O.C. REMAINDER	3/S0-4
P1.5	1'-6"	1'-6"	B	4 - #8	3 x #3 AT 3" O.C. TOP, #3 AT 12" O.C. REMAINDER	3/S0-4
C2	2'-0"	2'-0"	A	8 - #8	3 x #3 AT 3" O.C. TOP, #3 AT 9" O.C. REMAINDER	3/S0-4 AND 2/S2-17

COLUMN SCHEDULE

COLUMN SIZE	BASE PLATE	ANCHOR BOLTS	REFERENCE
W12x65	PL 3/4" x 14" x 14"	4 - 3/4" DIA.	12/S0-4
W14x90	PL 3/4" x 18" x 18"	4 - 1" DIA.	11/S0-4
W14x109	PL 3/4" x 18" x 18"	4 - 1" DIA.	11/S0-4
W14x132	PL 3/4" x 18" x 18"	4 - 1" DIA.	11/S0-4
W14x145	PL 3/4" x 18" x 18"	4 - 1" DIA.	11/S0-4
HSS5x5x1/4	PL 3/4" x 12" x 12"	4 - 3/4" DIA.	9/S0-4

For Public Viewing Only-Not For Downloading

COMMONWEALTH ENGINEERS, INC.
https://commonwealthengineers.com/
MATTHEW R. MURRAY REGISTERED PE11500002 STATE OF INDIANA PROFESSIONAL ENGINEER
Signature Date 10/03/2025
CE Solutions structural engineers
9800 Crosspoint Blvd. Suite 300 Indianapolis, IN 46256 317.436.7800 ceindianapolis.com

TOWN OF NEWBURGH
WARRICK COUNTY, INDIANA

WASTEWATER TREATMENT PLANT FLOW EQ BASIN

© 2025 BY COMMONWEALTH ENGINEERS, INC. ALL RIGHTS RESERVED. REPRODUCTION BY ANY METHOD IN WHOLE OR IN PART WITHOUT PERMISSION IS PROHIBITED

Indiana 811 Know what's below. 811 before you dig. 1-800-382-5544 (ITS THE LAW)

No.	Submittal / Revision	By	Date

Designed By:	Drawn By:	Checked By:
MRM	RMS	MRM
Issue Date:	Project No:	Scale:
10/03/2025	25-107	As indicated

NEW HEADWORKS BUILDING - FOUNDATION AND SLAB-ON-GROUND PLAN

Drawing No: **S2-1**

Sheet: 97 OF 161

Saved: 10/2/2025 5:18:17 PM Current Local File: Autodesk Docs://Newburgh New WWTP EQ and Headworks/25-107_S2 HEADWORKS BLDG_v23.rvt

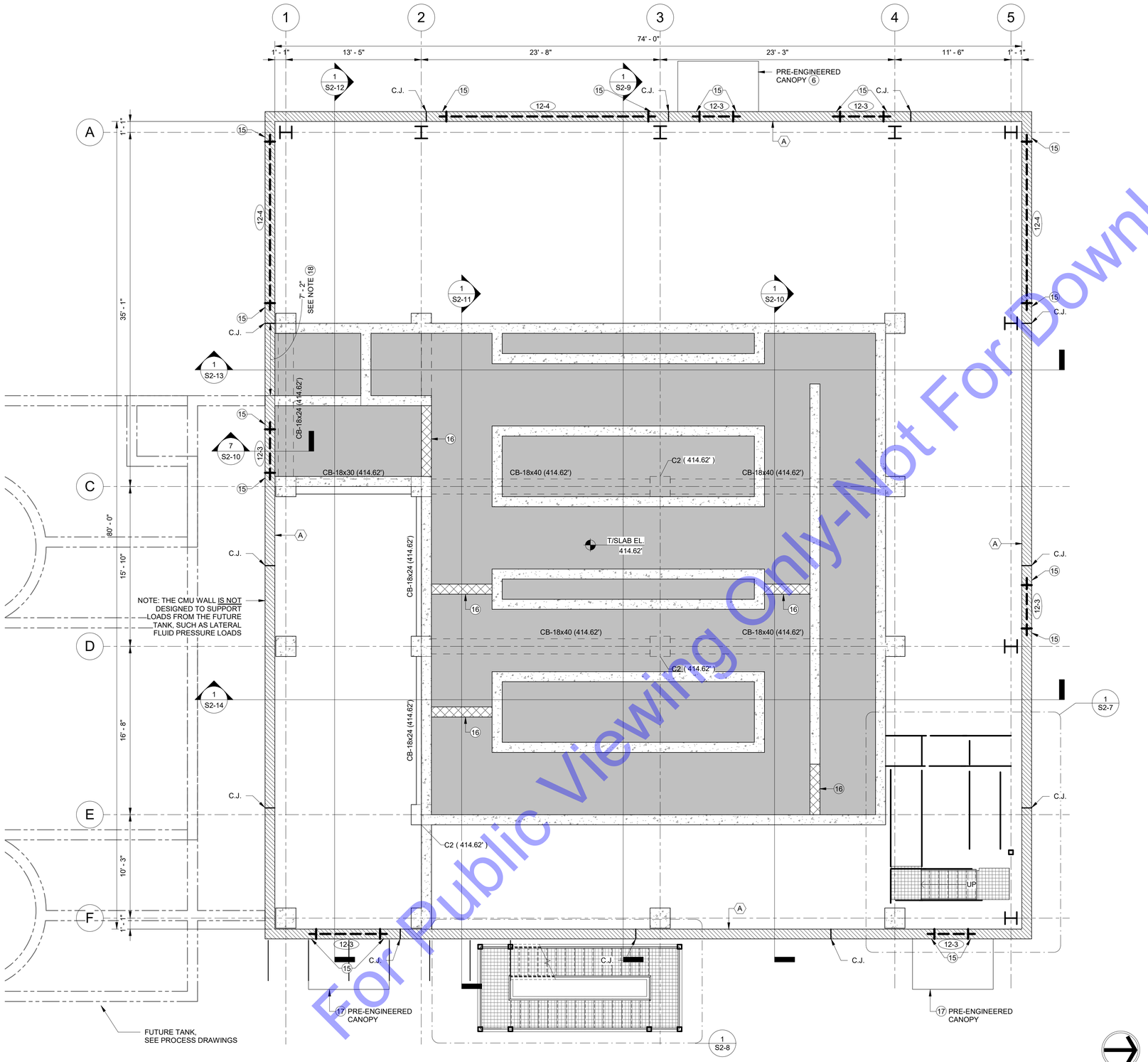

1 S2-2 LOWER LEVEL CHANNEL PLAN
3/16" = 1'-0"

PLAN NOTES

- ◯ INDICATES NOTE REFERENCED IN PLAN
1. SEE THE S0-SERIES SHEETS FOR GENERAL STRUCTURAL NOTES AND TYPICAL STRUCTURAL DETAILS.
2. T/PEDESTAL ELEVATION = SEE PLAN.
3. GENERAL CONTRACTOR TO COORDINATE ALL OPENING, PIPE SLEEVES, EMBEDDED ITEMS, HANDRAILS, GRATING, ETC. WITH THE PROCESS DRAWINGS.
4. ALL DIMENSIONS AND ELEVATIONS SHALL BE VERIFIED PRIOR TO FABRICATION, CONSTRUCTION OR ERECTION. THE GENERAL CONTRACTOR SHALL ASSUME RESPONSIBILITY FOR ANY DISCREPANCIES.
5. CX (XXX.XX) DENOTES CONCRETE COLUMN MARK AND ELEVATION, SEE PEDESTAL / CONCRETE COLUMN SCHEDULE.
6. GENERAL CONTRACTOR SHALL SUBMIT A CONSTRUCTION JOINT (CJ) AND CONTRACTION JOINT (CT) LOCATION PLAN TO THE STRUCTURAL ENGINEER FOR REVIEW PRIOR TO CONCRETE PLACEMENT.
7. SEE DETAILS 6/S0-3 AND 7/S0-3 FOR WALL CONSTRUCTION JOINT AND WALL CONTRACTION JOINT REQUIREMENTS.
8. MAINTAIN STRUCTURAL SLAB THICKNESSES AT ALL FLOOR SLOPES AND DEPRESSIONS.
9. 2 INCH HEAVY DUTY ALUMINUM PLANK (UNPUNCHED), MAXIMUM WEIGHT PER PANEL = 88 LBS. APPROX. SEE GENERAL NOTES AND SPECIFICATIONS FOR MORE INFORMATION.
10. (X) DENOTES MASONRY WALL TYPE, SEE SCHEDULE ON SHEET S2-3.
11. "C.J." INDICATES CMU WALL CONTROL JOINT, SEE ARCH. DRAWINGS AND TYP. DETAILS.
12. ALL STRUCTURAL STEEL SHALL BE HOT-DIP GALVANIZED.
13. CB-XX INDICATES REINFORCED CONCRETE BEAM, SEE DETAIL 7/S2-17
14. (8-X) / (12-X) DENOTES MASONRY LINTEL - SEE SCHEDULE ON SHEET S2-4.
15. AT DOOR AND WINDOW JAMBS, PROVIDE TWO GROUTED CELLS WITH (2) #6 VERTICAL BARS IN EACH CELL, EACH SIDE OF OPENING (TOTAL OF 4 - #6 BARS AT EACH JAMB).
16. KNOCK-OUT WALL PANEL, SEE PROCESS DRAWINGS. REINFORCEMENT SHALL MATCH THE TYPICAL REINFORCEMENT FOR THE ADJACENT CHANNEL WALLS.
17. PRE-ENGINEERED STEEL CANOPY, SEE SPECIFICATIONS FOR INFORMATION.
18. WHERE INDICATED ON PLAN, VERTICAL REINFORCEMENT FOR 12" CMU WALL SHALL BE (2) #6 BARS AT 16" O.C.

PEDESTAL / CONCRETE COLUMN SCHEDULE

MARK	WIDTH	LENGTH	TYPE	V. REINF.	TIES	REFERENCE
P2.25	2'-3"	2'-3"	C	12 - #7	3 x #3 AT 3" O.C. TOP, #3 AT 12" O.C. REMAINDER	3/S0-4
P1.5	1'-6"	1'-6"	B	4 - #8	3 x #3 AT 3" O.C. TOP, #3 AT 12" O.C. REMAINDER	3/S0-4
C2	2'-0"	2'-0"	A	8 - #8	3 x #3 AT 3" O.C. TOP, #3 AT 9" O.C. REMAINDER	3/S0-4 AND 2/S2-17

COLUMN SCHEDULE

COLUMN SIZE	BASE PLATE	ANCHOR BOLTS	REFERENCE
W12x65	PL 3/4" x 14" x 14"	4 - 3/4" DIA.	12/S0-4
W14x90	PL 3/4" x 18" x 18"	4 - 1" DIA.	11/S0-4
W14x109	PL 3/4" x 18" x 18"	4 - 1" DIA.	11/S0-4
W14x132	PL 3/4" x 18" x 18"	4 - 1" DIA.	11/S0-4
W14x145	PL 3/4" x 18" x 18"	4 - 1" DIA.	11/S0-4
HSS5x5x1/4	PL 3/4" x 12" x 12"	4 - 3/4" DIA.	9/S0-4

For Public Viewing Only-Not For Download

COMMONWEALTH ENGINEERS, INC.
A MEMBER OF ABONMARCHE CONSULTANTS GROUP
https://commonwealthengineers.com/

MATTHEW R. MURRAY
REGISTERED
PE11500002
STATE OF INDIANA
PROFESSIONAL ENGINEER
10/03/2025
Signature Date

CE Solutions
structural engineers
3500 Depauw Blvd, Suite 3080
Indianapolis, IN 46268
ceindianapolis.com

TOWN OF NEWBURGH
WARRICK COUNTY, INDIANA

WASTEWATER TREATMENT
PLANT FLOW EQ BASIN

© 2025 BY COMMONWEALTH ENGINEERS, INC. ALL RIGHTS RESERVED. REPRODUCTION BY ANY METHOD IN WHOLE OR IN PART WITHOUT PERMISSION IS PROHIBITED

Indiana811 Know what's below. 811 before you dig. 1-800-382-5544 (ITS THE LAW)

No.	Submittal / Revision	By	Date

Designed By:	Drawn By:	Checked By:
MRM	RMS	MRM
Issue Date:	Project No:	Scale:
10/03/2025	25-107	As indicated

NEW HEADWORKS BUILDING - LOWER LEVEL CHANNEL PLAN

Drawing No:
S2-2
Sheet: 98 OF 161

Saved: 10/2/2025 5:18:19 PM Current Local File: Autodesk Docs://Newburgh New WWTP EQ and Headworks/25-107_S2 HEADWORKS BLDG_v23.rvt

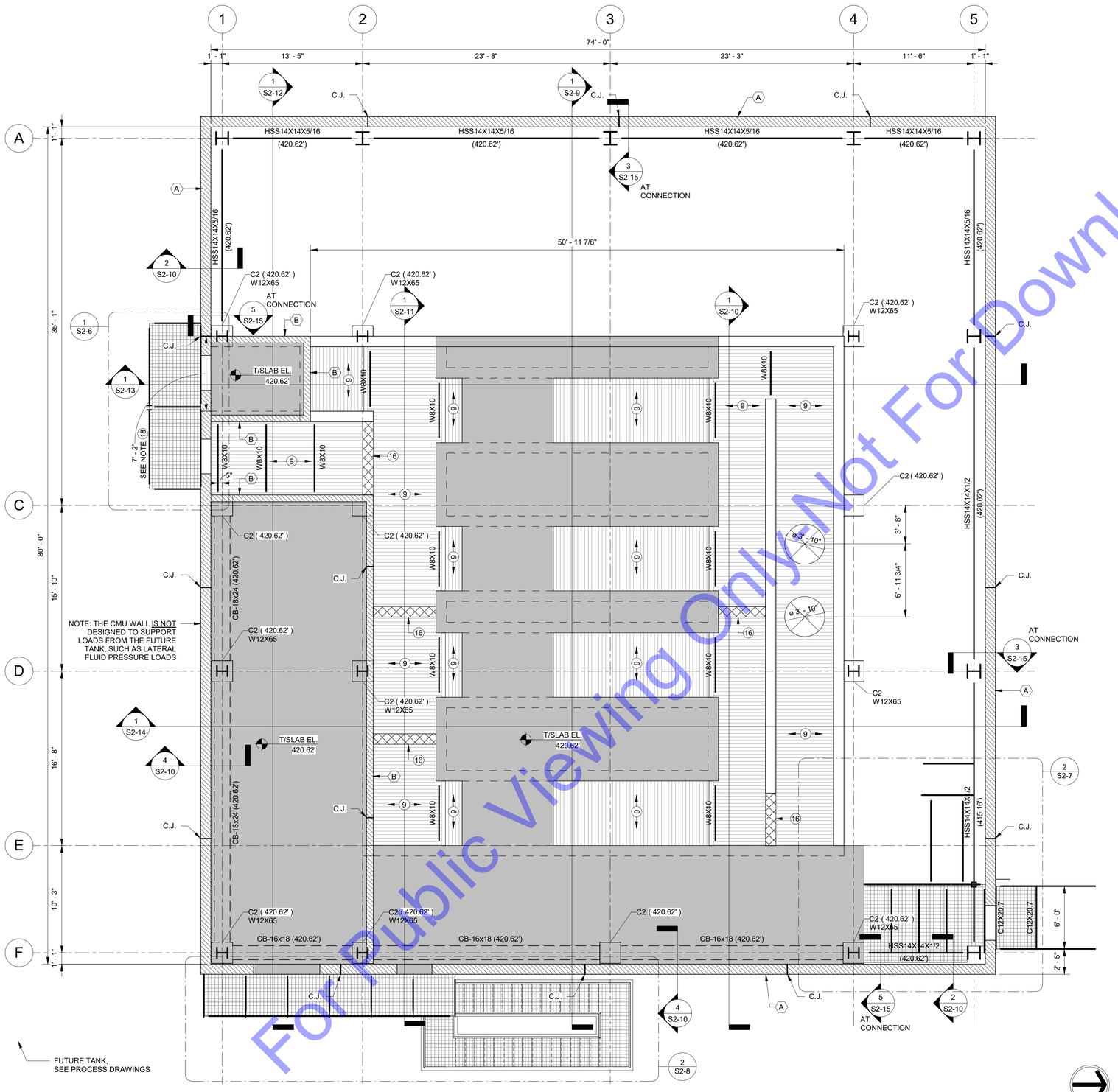

1 S2-3 UPPER LEVEL CHANNEL PLAN
3/16" = 1'-0"

For Public Viewing Only-Not For Download

PLAN NOTES

◯ INDICATES NOTE REFERENCED IN PLAN

1. SEE THE S0-SERIES SHEETS FOR GENERAL STRUCTURAL NOTES AND TYPICAL STRUCTURAL DETAILS.
2. T/PEDESTAL ELEVATION = SEE PLAN.
3. GENERAL CONTRACTOR TO COORDINATE ALL OPENING, PIPE SLEEVES, EMBEDDED ITEMS, HANDRAILS, GRATING, ETC. WITH THE PROCESS DRAWINGS.
4. ALL DIMENSIONS AND ELEVATIONS SHALL BE VERIFIED PRIOR TO FABRICATION, CONSTRUCTION OR ERECTION. THE GENERAL CONTRACTOR SHALL ASSUME RESPONSIBILITY FOR ANY DISCREPANCIES.
5. CX (XXX.XX) DENOTES CONCRETE COLUMN MARK AND ELEVATION, SEE PEDESTAL / CONCRETE COLUMN SCHEDULE.
6. GENERAL CONTRACTOR SHALL SUBMIT A CONSTRUCTION JOINT (CJ) AND CONTRACTION JOINT (CT) LOCATION PLAN TO THE STRUCTURAL ENGINEER FOR REVIEW PRIOR TO CONCRETE PLACEMENT.
7. SEE DETAILS 6/S0-3 AND 7/S0-3 FOR WALL CONSTRUCTION JOINT AND WALL CONTRACTION JOINT REQUIREMENTS.
8. MAINTAIN STRUCTURAL SLAB THICKNESSES AT ALL FLOOR SLOPES AND DEPRESSIONS.
9. 2 INCH HEAVY DUTY ALUMINUM PLANK (UNPUNCHED), MAXIMUM WEIGHT PER PANEL = 88 LBS. APPROX. SEE GENERAL NOTES AND SPECIFICATIONS FOR MORE INFORMATION.
10. (X) DENOTES MASONRY WALL TYPE, SEE SCHEDULE ON SHEET S2-3.
11. "C.J." INDICATES CMU WALL CONTROL JOINT, SEE ARCH. DRAWINGS AND TYP. DETAILS.
12. ALL STRUCTURAL STEEL SHALL BE HOT-DIP GALVANIZED.
13. CB-XX INDICATES REINFORCED CONCRETE BEAM, SEE DETAIL 7/S2-17
14. (8-X) / (12-X) DENOTES MASONRY LINTEL - SEE SCHEDULE ON SHEET S2-4.
15. AT DOOR AND WINDOW JAMBS, PROVIDE TWO GROUTED CELLS WITH (2) #6 VERTICAL BARS IN EACH CELL, EACH SIDE OF OPENING (TOTAL OF 4 - #6 BARS AT EACH JAMB).
16. KNOCK-OUT WALL PANEL, SEE PROCESS DRAWINGS. REINFORCEMENT SHALL MATCH THE TYPICAL REINFORCEMENT FOR THE ADJACENT CHANNEL WALLS.
17. PRE-ENGINEERED STEEL CANOPY, SEE SPECIFICATIONS FOR INFORMATION.
18. WHERE INDICATED ON PLAN, VERTICAL REINFORCEMENT FOR 12" CMU WALL SHALL BE (2) #6 BARS AT 16" O.C.

PEDESTAL / CONCRETE COLUMN SCHEDULE

MARK	WIDTH	LENGTH	TYPE	V. REINF.	TIES	REFERENCE
P2.25	2'-3"	2'-3"	C	12 - #7	3 x #3 AT 3" O.C. TOP, #3 AT 12" O.C. REMAINDER	3/S0-4
P1.5	1'-6"	1'-6"	B	4 - #8	3 x #3 AT 3" O.C. TOP, #3 AT 12" O.C. REMAINDER	3/S0-4
C2	2'-0"	2'-0"	A	8 - #8	3 x #3 AT 3" O.C. TOP, #3 AT 9" O.C. REMAINDER	3/S0-4 AND 2/S2-17

COLUMN SCHEDULE

COLUMN SIZE	BASE PLATE	ANCHOR BOLTS	REFERENCE
W12x65	PL 3/4" x 14" x 14"	4 - 3/4" DIA.	12/S0-4
W14x90	PL 3/4" x 18" x 18"	4 - 1" DIA.	11/S0-4
W14x109	PL 3/4" x 18" x 18"	4 - 1" DIA.	11/S0-4
W14x132	PL 3/4" x 18" x 18"	4 - 1" DIA.	11/S0-4
W14x145	PL 3/4" x 18" x 18"	4 - 1" DIA.	11/S0-4
HSS5x5x1/4	PL 3/4" x 12" x 12"	4 - 3/4" DIA.	9/S0-4

MASONRY WALL REINFORCING SCHEDULE

A	12-INCH CMU WALL 12-INCH NORMAL WEIGHT CMU BLOCK VERTICAL: (2) #6 BARS AT 40" O.C. HORIZONTAL: (2) #6 BARS AT BB ELEV. = T/WALL #9 JOINT REINF. AT 16-INCHES O.C. (8" LAP)
B	8-INCH CMU WALL 8-INCH NORMAL WEIGHT CMU BLOCK VERTICAL: #5 BARS AT 48" O.C. HORIZONTAL: (2) #5 BARS AT BB ELEV. = T/WALL #9 JOINT REINF. AT 16-INCHES O.C. (8" LAP)

NOTES:

1. REINFORCE ALL WALLS AS NOTED BY SCHEDULE EXCEPT AS NOTED ON PLANS AND/OR DETAILS.
2. PROVIDE BOND BEAM (BB) AT TOP OF ALL WALLS. WHEN WALL COURSING DOES NOT FINISH ON A FULL BLOCK, TOP BB DEPTH SHALL BE THE LAST FULL BLOCK PLUS THE PARTIAL DEPTH OF THE REMAINING BLOCK AT TOP OF THE WALL.
3. PROVIDE A 1'-0" HOOK AT TOP OF ALL VERTICAL BARS.

MANDATORY ALTERNANTE (MA-2)
REPLACE ALL GALVANIZED STRUCTURAL STEEL ASSOCIATED WITH THE PLATFORMS SPANNING THE CHANNELS WITHIN THE INTERIOR OF THE HEADWORKS BUILDING, WITH TYPE 316 STAINLESS STEELWITH TYPE 316 STAINLESS STEEL. THIS INCLUDES, BUT IS NOT LIMITED TO, STRINGERS, CHANNELS, WIDE-FLANGE BEAMS, PLATES, ANGLES, BOLTS, AND ALL OTHER STRUCTURAL STEEL COMPONENTS THAT ARE PART OF EACH ASSEMBLY. REFER TO DS 29 FOR INFORMATION.

COMMONWEALTH ENGINEERS, INC.
A MEMBER OF FIRMS DEDICATED TO CHANGING THE CONSTRUCTION GAME
https://commonwealthengineers.com/

MATTHEW R. MURRAY
REGISTERED
PE11500002
STATE OF INDIANA
PROFESSIONAL ENGINEER
Signature
Date 10/03/2025

CE Solutions
structural engineers
Fishers, IN 46038

TOWN OF NEWBURGH
WARRICK COUNTY, INDIANA
WASTEWATER TREATMENT
PLANT FLOW EQ BASIN

© 2025 BY COMMONWEALTH ENGINEERS, INC. ALL RIGHTS RESERVED. REPRODUCTION BY ANY METHOD IN WHOLE OR IN PART WITHOUT PERMISSION IS PROHIBITED

Indiana 811 Know what's below. 811 before you dig. 1-800-382-5544 (ITS THE LAW)

No.	Submittal / Revision	By	Date

Designed By:	Drawn By:	Checked By:
MRM	RMS	MRM
Issue Date:	Project No:	Scale:
10/03/2025	25-107	As indicated

NEW HEADWORKS BUILDING - UPPER LEVEL CHANNEL PLAN

Drawing No:
S2-3
Sheet: 99 OF 161

Saved: 10/2/2025 5:18:23 PM Current Local File: Autodesk Docs://Newburgh New WWTP EQ and Headworks/25-107_S2 HEADWORKS BLDG_v23.rvt

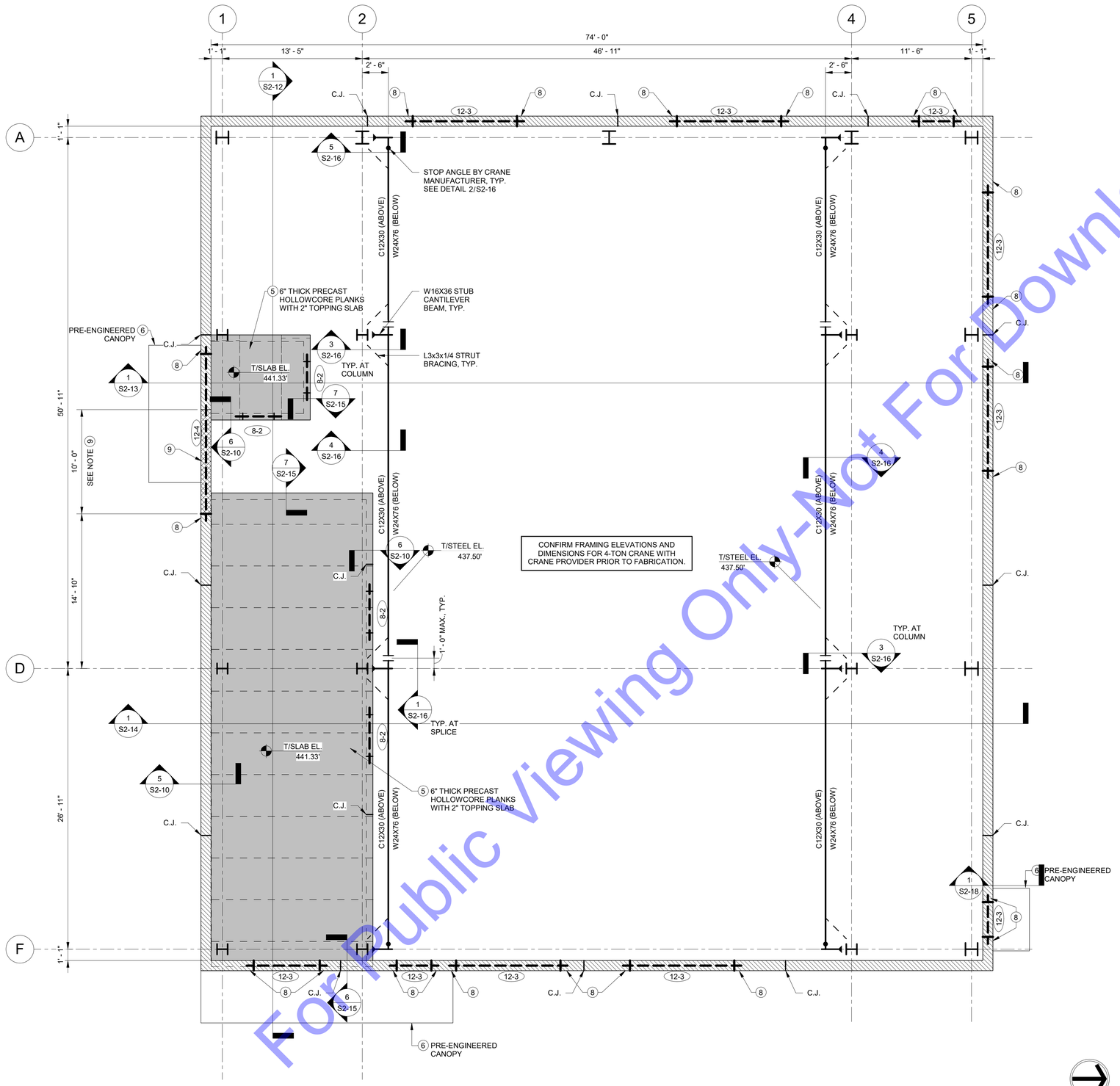

1 S2-4 INTERMEDIATE FRAMING PLAN
3/16" = 1'-0"

INTERMEDIATE FRAMING PLAN NOTES

(A) INDICATES NOTE REFERENCED IN PLAN

1. SEE THE S0-SERIES SHEETS FOR GENERAL STRUCTURAL NOTES AND TYPICAL STRUCTURAL DETAILS.
2. T/STEEL ELEVATION = SEE PLAN.
3. ALL STRUCTURAL STEEL SHALL BE HOT-DIP GALVANIZED.
4. "C.J." INDICATES CMU WALL CONTROL JOINT, SEE ARCH. DRAWINGS AND TYP. DETAILS.
5. PRECAST MANUFACTURER SHALL DESIGN HOLLOWCORE PLANKS FOR THE FOLLOWING UNIFORMLY DISTRIBUTED LOADS:

   DEAD LOAD = 85 PSF (INCLUDES SELFWEIGHT OF SLAB AND TOPPING)
   LIVE LOAD = 20 PSF
6. PRE-ENGINEERED STEEL CANOPY, SEE SPECIFICATIONS FOR INFORMATION.
7. (8-X) / (12-X) DENOTES MASONRY LINTEL - SEE SCHEDULE ON THIS SHEET.
8. AT DOOR AND WINDOW JAMBS, PROVIDE TWO GROUTED CELLS WITH (2) #6 VERTICAL BARS IN EACH CELL, EACH SIDE OF OPENING (TOTAL OF 4 - #6 BARS AT EACH JAMB).
9. THE 10'-0" WIDE WALL REGION INDICATED ON THE PLAN IS DESIGNED TO BE A REMOVEABLE PORTION OF THE CMU WALL FOR EXPANSION OF THE FUTURE TANK (SEE PROCESS DRAWINGS). THE LINTEL REINFORCEMENT SHALL EXTEND 24" BEYOND THE EAST END OF THE 10'-0" WIDE REGION. THE BOTTOM OF THE LINTEL SHALL BE LOCATED AT THE HEAD OF THE MAN DOORS (SEE ARCHITECTURAL AND PROCESS DRAWINGS). THE BOTTOM OF THE REMOVABLE PORTION OF THE WALL IS AT ELEVATION 413.62'.

CMU LINTEL SCHEDULE

MARK	SIZE	BOTT. BARS	TOP BARS	EXTEND PAST OPNG.	TIES	SPAN
8-1	8" x 8"	2 - #5		8"	-	SEE PLAN
8-2	8" x 16"	2 - #5	2 - #5	16"	-	SEE PLAN
8-3	8" x 24"	2 - #5	2 - #5	16"	#3 AT 8" O.C.	SEE PLAN
12-3	12" x 24"	2 - #5	2 - #5	24"	#3 AT 8" O.C.	SEE PLAN
12-4	12" x 32"	2 - #6	2 - #6	24"	#3 AT 8" O.C.	SEE PLAN

LINTEL TYPES:

NOTES:

1. LINTEL BLOCKS AND BOTTOM BARS TO EXTEND PAST CMU OPENING TO WIDTHS INDICATED IN SCHEDULE. CUT OUT BOTTOM SHELL OF LINTEL BLOCKS AT BEARING TO ALLOW INTEGRAL GROUTING OF LINTEL & FILLED CELLS BELOW AT BEARING. PROVIDE FILLED CELLS FULL WIDTH OF BEARINGS INDICATED WITH VERTICAL IN EACH CELL EXTENDING FROM FLOOR TO FLOOR TO ROOF. USE BAR SIZE INDICATED FOR WALL THICKNESS/TYPE.
2. CONSTRUCTION JOINTS SHALL NOT OCCUR WITHIN 2" OF THE ENDS OF THE LINTEL BEARINGS.
3. LINTELS SHALL BE GROUTED SIMILAR TO WALLS. ALL GROUT MUST BE CONSOLIDATED TWICE, ONCE WITHIN 5 MINUTES OF PLACEMENT AND ONCE 15-20 MINUTES AFTER PLACEMENT.

For Public Viewing Only-Not For Downloading

COMMONWEALTH ENGINEERS, INC.
A DIVISION OF TRUEMARK TECHNOLOGIES, LLC
https://commonwealthengineers.com/

MATTHEW R. MURRAY
REGISTERED
PE11500002
STATE OF INDIANA
PROFESSIONAL ENGINEER
Signature 10/03/2025 Date

CE Solutions
structural engineers
9800 Crosspoint Blvd. Suite 300
Fishers, IN 46256
ceindiana.com

TOWN OF NEWBURGH
WARRICK COUNTY, INDIANA

WASTEWATER TREATMENT
PLANT FLOW EQ BASIN

© 2025 BY COMMONWEALTH ENGINEERS, INC. ALL RIGHTS RESERVED. REPRODUCTION BY ANY METHOD IN WHOLE OR IN PART WITHOUT PERMISSION IS PROHIBITED

Indiana811 Know what's below. Call before you dig. 1-800-382-5544 (ITS THE LAW)

No.	Submittal / Revision	By	Date

Designed By:	Drawn By:	Checked By:
MRM	RMS	MRM
Issue Date:	Project No:	Scale:
10/03/2025	25-107	As indicated

NEW HEADWORKS BUILDING - INTERMEDIATE FRAMING PLAN

Drawing No: **S2-4**

Sheet: 100 OF 161

Saved: 10/2/2025 5:18:24 PM Current Local File: Autodesk Docs://Newburgh New WWTP EQ and Headworks/25-107_S2 HEADWORKS BLDG_v23.rvt

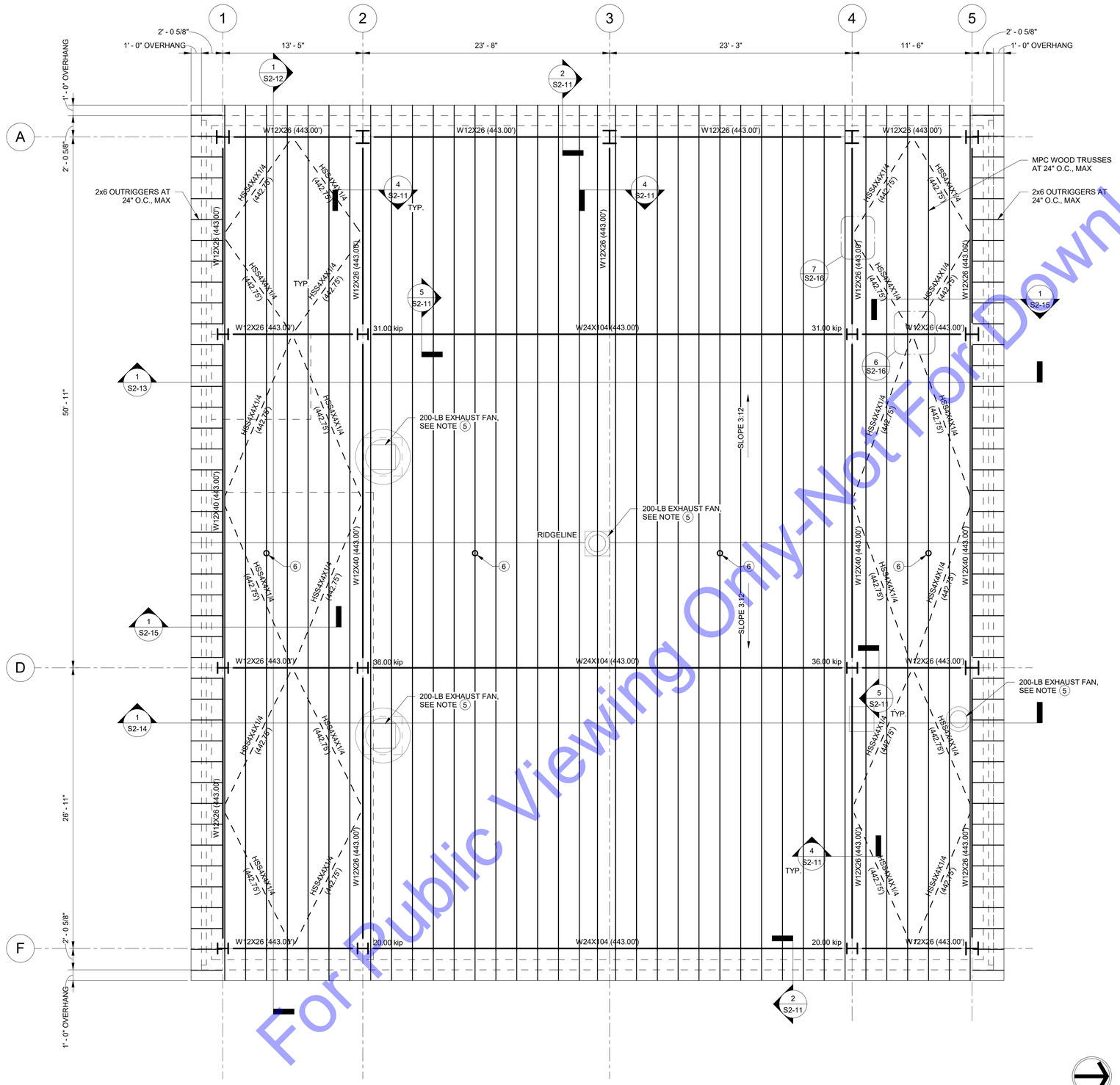

1 S2-5 ROOF FRAMING PLAN
3/16" = 1'-0"

ROOF FRAMING PLAN NOTES

○ INDICATES NOTE REFERENCED IN PLAN

1. SEE THE S0-SERIES SHEETS FOR GENERAL STRUCTURAL NOTES AND TYPICAL STRUCTURAL DETAILS.
2. T/CMU WALL ELEVATION = 443.00'
   T/STEEL ELEVATION = SEE PLAN.
3. ROOF SHEATHING SHALL BE 5/8-INCH APA-RATED PLYWOOD, PRESSURE PRESERVATIVE TREATED PER AWPA U1, USE CATEGORY UC3b. ATTACH WITH GALVANIZED 10d COMMON NAILS AT 12-INCHES O.C. IN FIELD AND 6-INCHES O.C. AT EDGES AND DIAPHRAGM BOUNDARIES, UNLESS NOTED OTHERWISE. PROVIDE SHEATHING SUPPORT CLIPS BETWEEN TRUSSES AT UNBLOCKED PANEL EDGES (SIMPSON PSCL OR EQUAL).

   CEILING SHEATHING ATTACHED TO UNDERSIDE OF ROOF TRUSSES SHALL BE 5/8-INCH APA-RATED PLYWOOD, PRESSURE PRESERVATIVE TREATED PER AWPA U1, USE CATEGORY UC3b. ATTACH WITH GALVANIZED 10d COMMON NAILS AT 12-INCHES O.C. IN FIELD AND 4-INCHES O.C. AT ALL PANEL EDGES AND DIAPHRAGM BOUNDARIES. THE DIAPHRAGM SHALL BE FULLY BLOCKED. ALL SHEATHING JOINTS SHALL OCCUR AT AND BE FASTENED TO COMMON FRAMING MEMBERS (BLOCKING).
4. METAL-PLATE-CONNECTED WOOD TRUSSES SHALL BE DESIGNED TO SUPPORT LOADING AS SPECIFIED ON SHEET S0-2. TRUSSES SHALL BE PRESSURE PRESERVATIVE TREATED PER AWPA U1, USE CATEGORY UC3b. CONNECTOR PLATES SHALL BE GALVANIZED (G185) OR STAINLESS STEEL (GRADE 304).
5. THE TRUSS MANUFACTURER SHALL COORDINATE THE SIZE, LOCATION, AND WEIGHT OF ALL ROOF-SUPPORTED EQUIPMENT, PIPING, CONDUIT, DUCTS, ETC. WITH THE ARCHITECTURAL, PROCESS, MECHANICAL, ELECTRICAL AND PLUMBING DRAWINGS AND THE GENERAL CONTRACTOR.
6. ROOF TIE-OFF ANCHOR, COORDINATE WITH ARCHITECTURAL DRAWINGS. TIE-OFF ANCHOR SHALL BE DESIGNED BY THE ANCHOR MANUFACTURER TO FASTEN DIRECTLY TO THE TRUSS TOP CHORD (SUPER ANCHOR ARS PERMANENT ROOF TRUSS ANCHOR OR APPROVED EQUIVALENT). CONNECTION OF THE ANCHOR TO THE TRUSS SHALL BE DESIGNED BY THE ANCHOR MANUFACTURER AND SHALL BE INSTALLED IN ACCORDANCE WITH THE MANUFACTURER'S REQUIREMENTS. THE TRUSS MANUFACTURER SHALL DESIGN THE TOP CHORD FOR A 5,000-LB FALL PROTECTION LOAD.
7. ALL STRUCTURAL STEEL SHALL BE HOT-DIP GALVANIZED.
8. STRUCTURAL STEEL FABRICATOR SHALL DESIGN BEAM-TO-COLUMN AND BEAM-TO-GIRDER CONNECTIONS FOR THE BEAM REACTIONS INDICATED ON THE FRAMING PLAN. BEAM REACTIONS SHOWN ARE ALLOWABLE STRESS DESIGN VALUES. WHERE NO GRAVITY REACTION IS LISTED ON THE BEAM FRAMING, DESIGN BEAM CONNECTIONS TO SUPPORT ONE HALF THE TOTAL LOAD CARRYING CAPACITY OF THE BEAM.
9. STRUCTURAL STEEL FABRICATOR SHALL DESIGN ALL BEAM-TO-COLUMN CONNECTIONS FOR AN AXIAL LOAD OF 24 KIPS IN ADDITION TO THE GRAVITY REACTIONS INDICATED ABOVE. THE AXIAL LOAD IS AN ASD LEVEL TENSION/COMPRESSION WIND OR SEISMIC LOAD.

For Public Viewing Only-Not For Download

COMMONWEALTH ENGINEERS, INC.
A MEMBER OF ABONMENTS TO CREATIVE & CONTINUU GROUP
https://commonwealthengineers.com/

MATTHEW R. MURRAY
REGISTERED
PE11500002
STATE OF INDIANA
PROFESSIONAL ENGINEER
Matt Murray 10/03/2025
Signature Date

CE Solutions
structural engineers
317.663.2626 | 300 cesolutionsinc.com
Fishers, IN 46038

TOWN OF NEWBURGH
WARRICK COUNTY, INDIANA

WASTEWATER TREATMENT
PLANT FLOW EQ BASIN

© 2025 BY COMMONWEALTH ENGINEERS, INC. ALL RIGHTS RESERVED. REPRODUCTION BY ANY METHOD IN WHOLE OR IN PART WITHOUT PERMISSION IS PROHIBITED

Indiana 811 Know what's below. 811 before you dig. 1-800-382-5544 (ITS THE LAW)

No.	Submittal / Revision	By	Date

Designed By:	Drawn By:	Checked By:
MRM	RMS	MRM
Issue Date:	Project No:	Scale:
10/03/2025	25-107	As indicated

NEW HEADWORKS BUILDING - ROOF FRAMING PLAN

Drawing No:
S2-5
Sheet: 101 OF 161

Saved: 10/2/2025 5:18:28 PM Current Local File: Autodesk Docs://Newburgh New WWTP EQ and Headworks/25-107_S2 HEADWORKS BLDG_v23.rvt

PLATFORM PLAN NOTES

◯ INDICATES NOTE REFERENCED IN PLAN

1. SEE THE S0-SERIES SHEETS FOR GENERAL STRUCTURAL NOTES AND TYPICAL STRUCTURAL DETAILS.
2. ALL DIMENSIONS AND ELEVATIONS SHALL BE VERIFIED PRIOR TO FABRICATION, CONSTRUCTION OR ERECTION. THE GENERAL CONTRACTOR SHALL ASSUME RESPONSIBILITY FOR ANY DISCREPANCIES.
3. (3) 2-INCH HEAVY DUTY ALUMINUM PLANK (PUNCHED), MAXIMUM WEIGHT PER PANEL = 88 LBS. APPROX. SEE GENERAL NOTES AND SPECIFICATIONS FOR MORE INFORMATION.
4. ALL STEEL SHALL BE HOT-DIP GALVANIZED.

MANDATORY ALTERNANTE (MA-2)
REPLACE ALL GALVANIZED STRUCTURAL STEEL ASSOCIATED WITH THE EXTERIOR STAIRS AND PLATFORM ASSEMBLIES WITH TYPE 316 STAINLESS STEEL. THIS INCLUDES, BUT IS NOT LIMITED TO, STRINGERS, CHANNELS, WIDE-FLANGE BEAMS, PLATES, ANGLES, BOLTS, AND ALL OTHER STRUCTURAL STEEL COMPONENTS THAT ARE PART OF EACH ASSEMBLY. REFER TO SPECIFICASTION DS-29 FOR INFORMATION.

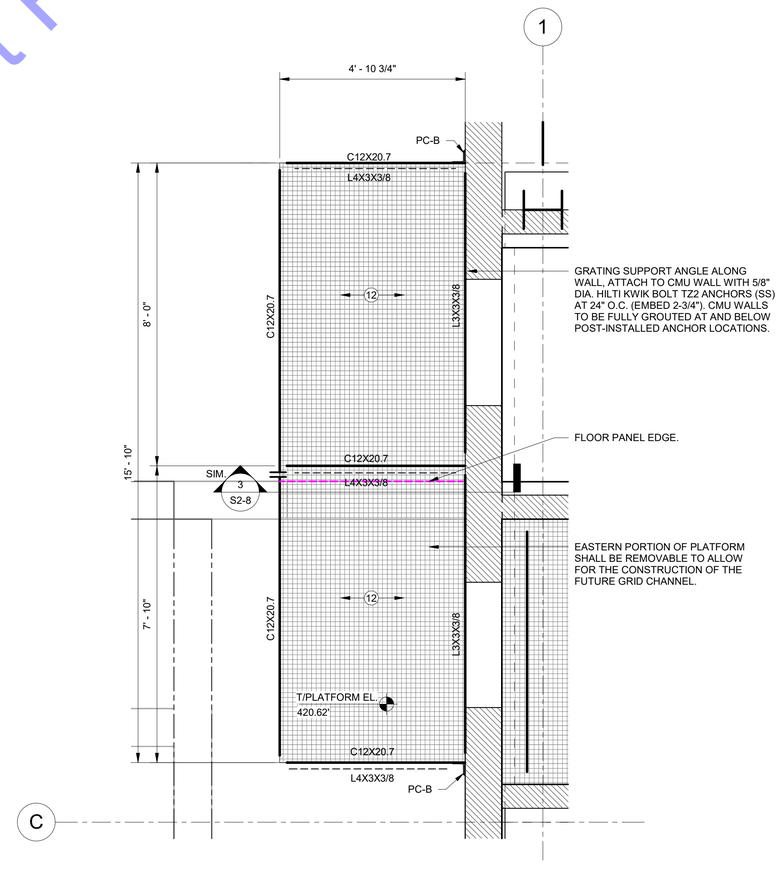

1 / S2-6 ENLARGED EXTERIOR WEST PLATFORM - FRAMING PLAN (HIGH) - WEST STAIR
1/2" = 1'-0"

For Public Viewing Only-Not For Download

COMMONWEALTH ENGINEERS, INC.
https://commonwealthengineers.com/

MATTHEW R. MURRAY
REGISTERED
PE11500002
STATE OF INDIANA
PROFESSIONAL ENGINEER
Signature
10/03/2025
Date

CE Solutions
structural engineers
317.663.3330
Fishers, IN 46038
ceisolutionsllc.com

TOWN OF NEWBURGH
WARRICK COUNTY, INDIANA

WASTEWATER TREATMENT
PLANT FLOW EQ BASIN

© 2025 BY COMMONWEALTH ENGINEERS, INC. ALL RIGHTS RESERVED. REPRODUCTION BY ANY METHOD IN WHOLE OR IN PART WITHOUT PERMISSION IS PROHIBITED

Indiana811 Know what's below. 811 before you dig.
1-800-382-5544 (ITS THE LAW)

No.	Submittal / Revision	By	Date

Designed By:	Drawn By:	Checked By:
JTM	JTM	MRM
Issue Date:	Project No:	Scale:
10/03/2025	25-107	As indicated

NEW HEADWORKS BUILDING - SOUTH PLATFORM FRAMING PLANS

Drawing No:
S2-6
Sheet: 102 OF 161

Saved: 10/2/2025 5:18:28 PM Current Local File: Autodesk Docs://Newburgh New WWTP EQ and Headworks/25-107_S2 HEADWORKS BLDG_v23.rvt

For Public Viewing Only-Not For Download

STAIR PLAN NOTES

◯ INDICATES NOTE REFERENCED IN PLAN

1. SEE THE S0-SERIES SHEETS FOR GENERAL STRUCTURAL NOTES AND TYPICAL STRUCTURAL DETAILS.
2. ALL DIMENSIONS AND ELEVATIONS SHALL BE VERIFIED PRIOR TO FABRICATION, CONSTRUCTION OR ERECTION. THE GENERAL CONTRACTOR SHALL ASSUME RESPONSIBILITY FOR ANY DISCREPANCIES.
3. SEE SITE PLAN FOR ALL FINAL GRADE ELEVATIONS.
4. T/STEEL = (B/ 2" THICK FLOOR PLANK, U.N.O.)
5. SEE PLAN FOR STEEL STAIR STRINGER MIN. SIZE REQUIREMENTS. STEEL FABRICATOR SHALL DETERMINE REQUIRED STAIR STRINGER PROFILE TO ACCOMMODATE PROVIDED STAIR LENGTH DIMENSIONS AND ELEVATION CHANGE. PROVIDE COMPLETE JOINT PENETRATION WELDS AT ALL STRINGER TRANSTIONS
6. STAIR TREADS SHALL BE 1-3/4" THICK X 9" WIDE TYPE "F", PUNCHED, HEAVY DUTY ALUMINUM PLANK UNLESS OTHERWISE NOTED. CONTRACTOR SHALL DETERMINE REQUIRED STAIR STRINGER RISE / RUN LAYOUT. SEE TYPICAL STAIR DETAILS AND SPECIFICATIONS FOR ADDITIONAL INFORMATION.
7. STAIR LANDING GRATING SHALL BE 2" HEAVY DUTY, PUNCHED ALUMINUM PLANK UNLESS OTHERWISE NOTED. SEE TYPICAL STAIR DETAILS AND SPECIFICATIONS FOR ADDITIONAL INFORMATION.
8. PROVIDE L2X2X1/4 DIAGONAL BRACE AT 5'-0" O.C. MAX.ALONG ALL STAIR FLIGHTS AND AT EACH STAIR LANDING; WELD L2X2X1/4 BRACE MEMBERS TO STRINGER BOTTOM CHORDS.
9. EP-X DENOTES EMBED PLATE. SEE SCHEDULE ON SHEET S0-9.
10. PC-X DENOTES POST INSTALLED CONNECTION. SEE SCHEDULE ON SHEET S0-8.
11. T/CONCRETE PEDESTALS AND LANDING FOUNDATIONS TO BE 3" ABOVE GRADE UNLESS NOTED OTHERWISE.
12. 2-INCH HEAVY DUTY ALUMINUM PLANK (PUNCHED), MAXIMUM WEIGHT PER PANEL = 88 LBS. APPROX. SEE GENERAL NOTES AND SPECIFICATIONS FOR MORE INFORMATION.
13. ALL STEEL SHALL BE HOT-DIP GALVANIZED.
14. PROVIDE LATERAL BRACING TO STAIR LANDING POSTS PER DETAILS 6/S0-7 OR 7/S0-7

MANDATORY ALTERNANTE (MA-2)
REPLACE ALL GALVANIZED STRUCTURAL STEEL ASSOCIATED WITH THE EXTERIOR STAIRS AND PLATFORM ASSEMBLIES WITH TYPE 316 STAINLESS STEEL. THIS INCLUDES, BUT IS NOT LIMITED TO, STRINGERS, CHANNELS, WIDE-FLANGE BEAMS, PLATES, ANGLES, BOLTS, AND ALL OTHER STRUCTURAL STEEL COMPONENTS THAT ARE PART OF EACH ASSEMBLY. REFER TO SPECIFICASTION DS-29 FOR INFORMATION.

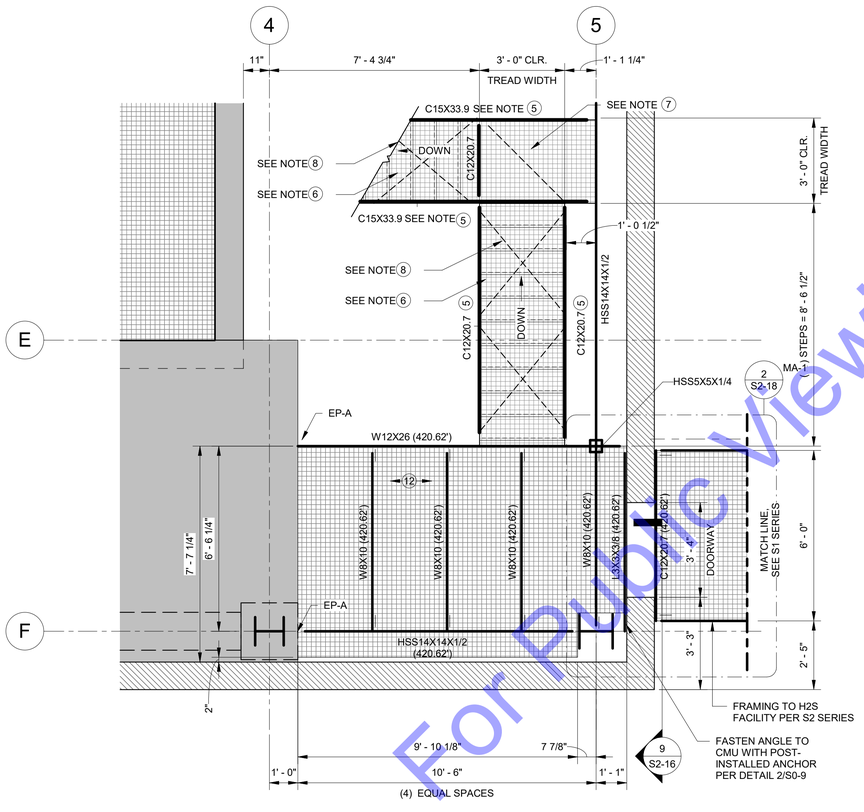

2 S2-7 ENLARGED STAIR FRAMING PLAN (HIGH) - INTERIOR STAIR
3/8" = 1'-0"

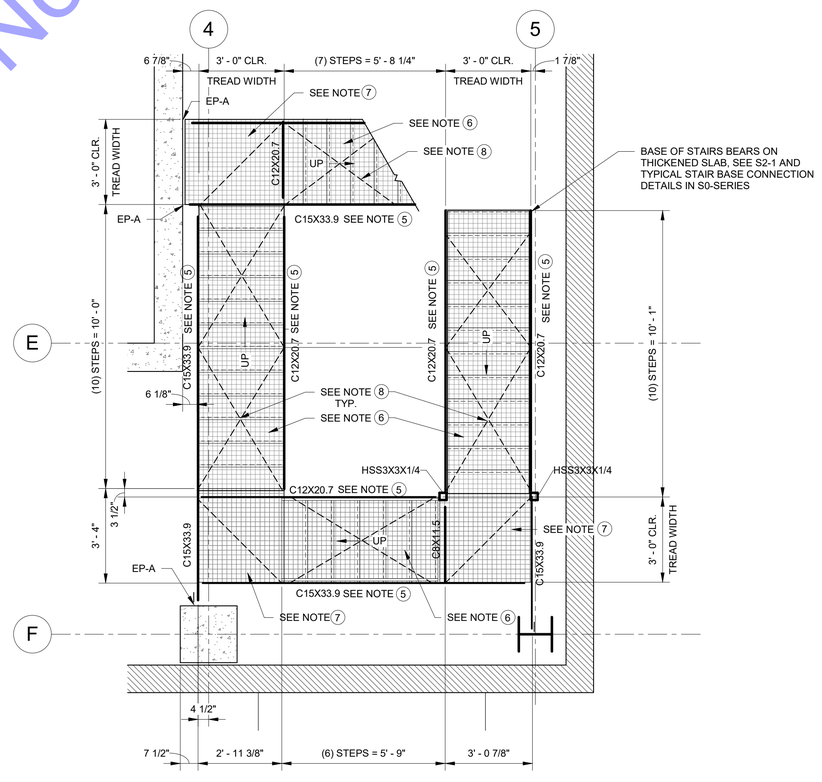

1 S2-7 ENLARGED STAIR FRAMING PLAN (LOW) - INTERIOR STAIR
3/8" = 1'-0"

COMMONWEALTH ENGINEERS, INC.
A division of Commonwealth Consulting Corporation
https://commonwealthengineers.com/

MATTHEW R. MURRAY
REGISTERED
PE11500002
STATE OF INDIANA
PROFESSIONAL ENGINEER
Signature Date 10/03/2025

CE Solutions
structural engineers
3333 Vision Drive, Suite 300
Fishers, IN 46038
ceindianapolis.com

TOWN OF NEWBURGH
WARRICK COUNTY, INDIANA

WASTEWATER TREATMENT
PLANT FLOW EQ BASIN

© 2025 BY COMMONWEALTH ENGINEERS, INC. ALL RIGHTS RESERVED. REPRODUCTION BY ANY METHOD IN WHOLE OR IN PART WITHOUT PERMISSION IS PROHIBITED

Indiana811 Know what's below. 811 before you dig. 1-800-382-5544 (ITS THE LAW)

No.	Submittal / Revision	By	Date

Designed By:	Drawn By:	Checked By:
JTM	JTM	MRM
Issue Date:	Project No:	Scale:
10/03/2025	25-107	As indicated

NEW HEADWORKS BUILDING - INTERIOR STAIR FRAMING PLANS

Drawing No: **S2-7**
Sheet: 103 OF 161

Saved: 10/2/2025 5:18:29 PM Current Local File: Autodesk Docs://Newburgh New WWTP EQ and Headworks/25-107_S2 HEADWORKS BLDG_v23.rvt

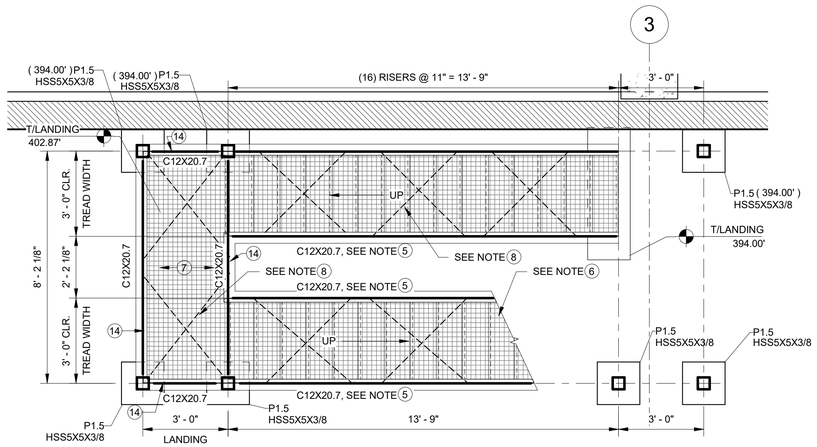

1 S2-8 ENLARGED STAIR FRAMING PLAN (LOW) - EAST STAIR

3/8" = 1'-0"

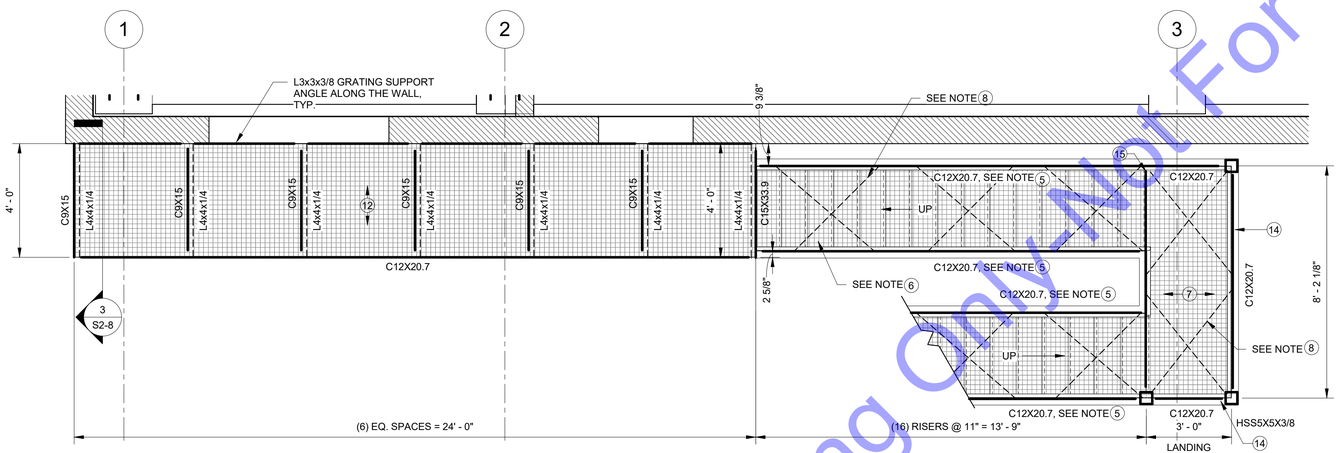

2 S2-8 ENLARGED STAIR FRAMING PLAN (HIGH) - EAST STAIR AND WALKWAY

3/8" = 1'-0"

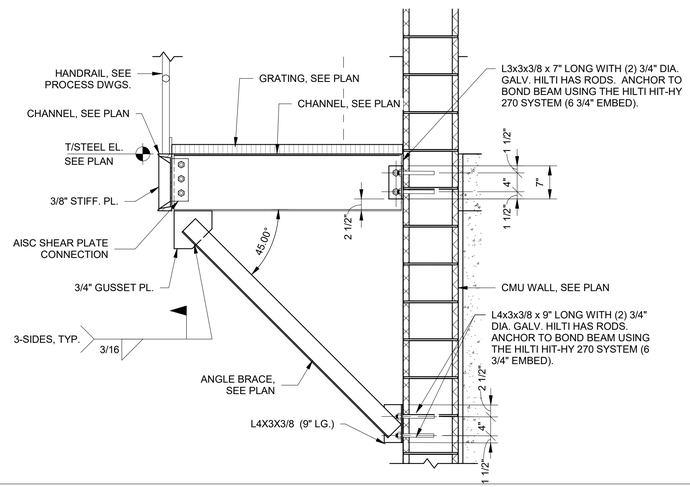

3 S2-8 SECTION

3/4" = 1'-0"

STAIR PLAN NOTES

INDICATES NOTE REFERENCED IN PLAN

1. SEE THE S0-SERIES SHEETS FOR GENERAL STRUCTURAL NOTES AND TYPICAL STRUCTURAL DETAILS.
2. ALL DIMENSIONS AND ELEVATIONS SHALL BE VERIFIED PRIOR TO FABRICATION, CONSTRUCTION OR ERECTION. THE GENERAL CONTRACTOR SHALL ASSUME RESPONSIBILITY FOR ANY DISCREPANCIES.
3. SEE SITE PLAN FOR ALL FINAL GRADE ELEVATIONS.
4. T/STEEL = 420.79' (B/ 2" THICK FLOOR PLANK, U.N.O.)
5. SEE PLAN FOR STEEL STAIR STRINGER MIN. SIZE REQUIREMENTS. STEEL FABRICATOR SHALL DETERMINE REQUIRED STAIR STRINGER PROFILE TO ACCOMMODATE PROVIDED STAIR LENGTH DIMENSIONS AND ELEVATION CHANGE. PROVIDE COMPLETE JOINT PENETRATION WELDS AT ALL STRINGER TRANSTIONS
6. STAIR TREADS SHALL BE 1-3/4" THICK X 9" WIDE TYPE "F", PUNCHED, HEAVY DUTY ALUMINUM PLANK UNLESS OTHERWISE NOTED. CONTRACTOR SHALL DETERMINE REQUIRED STAIR STRINGER RISE / RUN LAYOUT. SEE TYPICAL STAIR DETAILS AND SPECIFICATIONS FOR ADDITIONAL INFORMATION.
7. STAIR LANDING GRATING SHALL BE 2" HEAVY DUTY, PUNCHED ALUMINUM PLANK UNLESS OTHERWISE NOTED. SEE TYPICAL STAIR DETAILS AND SPECIFICATIONS FOR ADDITIONAL INFORMATION.
8. PROVIDE L2X2X1/4 DIAGONAL BRACE AT 5'-0" O.C. MAX ALONG ALL STAIR FLIGHTS AND AT EACH STAIR LANDING; WELD L2X2X1/4 BRACE MEMBERS TO STRINGER BOTTOM CHORDS.
9. EP-X DENOTES EMBED PLATE. SEE SCHEDULE ON SHEET S0-9.
10. PC-X DENOTES POST INSTALLED CONNECTION. SEE SCHEDULE ON SHEET S0-8.
11. T/CONCRETE PEDESTALS AND LANDING FOUNDATIONS TO BE 3" ABOVE GRADE UNLESS NOTED OTHERWISE.
12. 2-INCH HEAVY DUTY ALUMINUM PLANK (PUNCHED), MAXIMUM WEIGHT PER PANEL = 88 LBS. APPROX. SEE GENERAL NOTES AND SPECIFICATIONS FOR MORE INFORMATION.
13. ALL STEEL SHALL BE HOT-DIP GALVANIZED.
14. PROVIDE LATERAL BRACING TO STAIR LANDING POSTS PER DETAILS 6/S0-7 OR 7/S0-7

MANDATORY ALTERNANTE (MA-2)
REPLACE ALL GALVANIZED STRUCTURAL STEEL ASSOCIATED WITH THE EXTERIOR STAIRS AND PLATFORM ASSEMBLIES WITH TYPE 316 STAINLESS STEEL. THIS INCLUDES, BUT IS NOT LIMITED TO, STRINGERS, CHANNELS, WIDE-FLANGE BEAMS, PLATES, ANGLES, BOLTS, AND ALL OTHER STRUCTURAL STEEL COMPONENTS THAT ARE PART OF EACH ASSEMBLY. REFER TO SPECIFICASTION DS-29 FOR INFORMATION.

For Public Viewing Only - Not For Download

COMMONWEALTH ENGINEERS, INC.
https://commonwealthengineers.com/
MATTHEW R. MURRAY REGISTERED PE11500002 STATE OF INDIANA PROFESSIONAL ENGINEER
Signature Date 10/03/2025
CE Solutions structural engineers
STRUCTURAL ENGINEERS 330 ceesolutionsinc.com Fishers, IN 46038

TOWN OF NEWBURGH
WARRICK COUNTY, INDIANA

WASTEWATER TREATMENT
PLANT FLOW EQ BASIN

© 2025 BY COMMONWEALTH ENGINEERS, INC. ALL RIGHTS RESERVED. REPRODUCTION BY ANY METHOD IN WHOLE OR IN PART WITHOUT PERMISSION IS PROHIBITED

Indiana811 Know what's below. 811 before you dig. 1-800-382-5544 (ITS THE LAW)

No.	Submittal / Revision	By	Date

Designed By:	Drawn By:	Checked By:
JTM	JTM	MRM
Issue Date:	Project No:	Scale:
10/03/2025	25-107	As indicated

NEW HEADWORKS BUILDING - EAST STAIR FRAMING PLANS

Drawing No: **S2-8**

Sheet: 104 OF 161

Saved: 10/2/2025 5:18:31 PM Current Local File: Autodesk Docs://Newburgh New WWTP EQ and Headworks/25-107_S2 HEADWORKS BLDG_v23.rvt

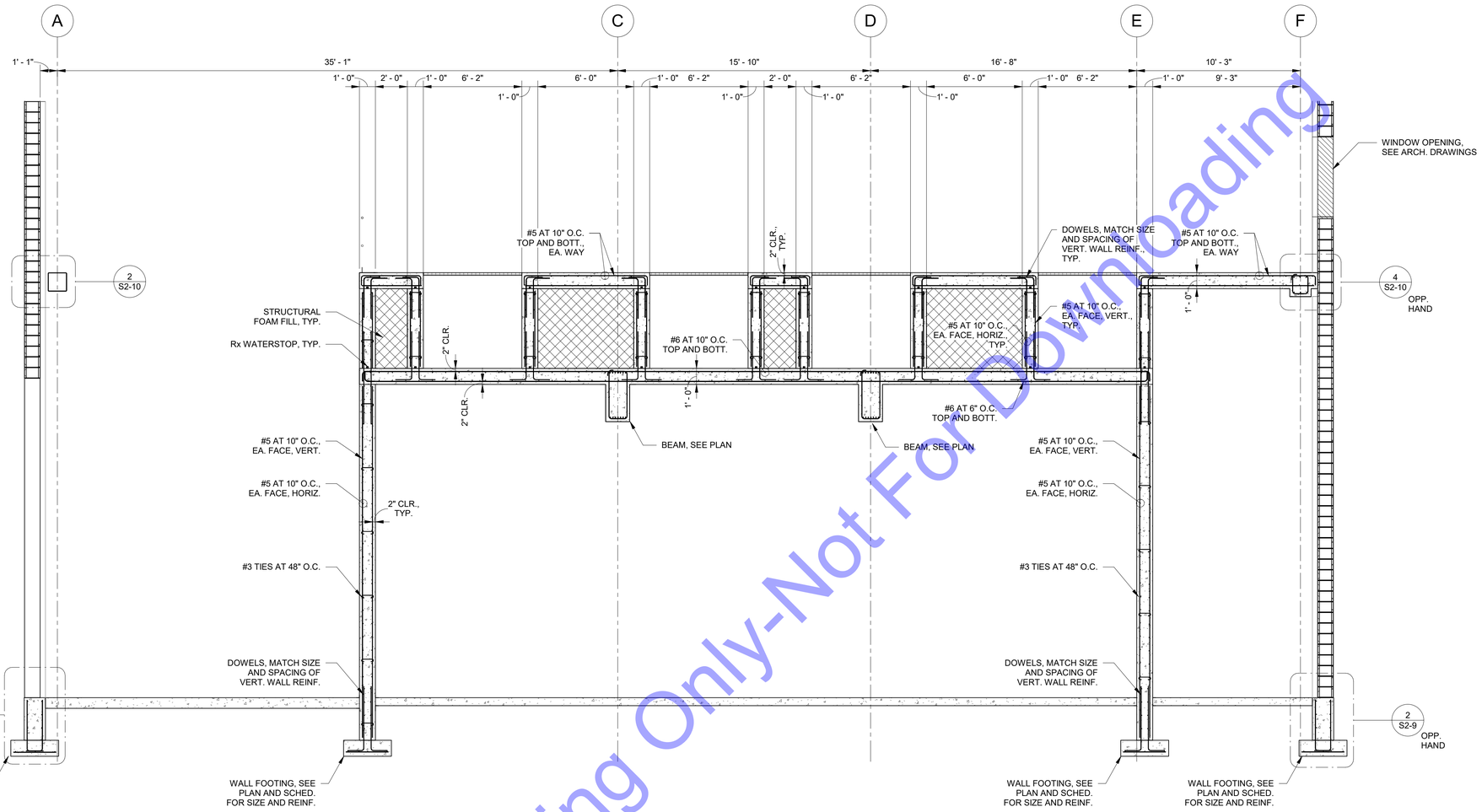

1 S2-9 SECTION
1/4" = 1'-0"

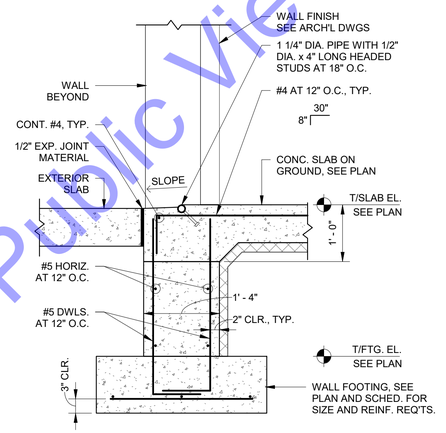

4 S2-9 FOUNDATION WALL SECTION AT OVERHEAD DOOR
3/4" = 1'-0"

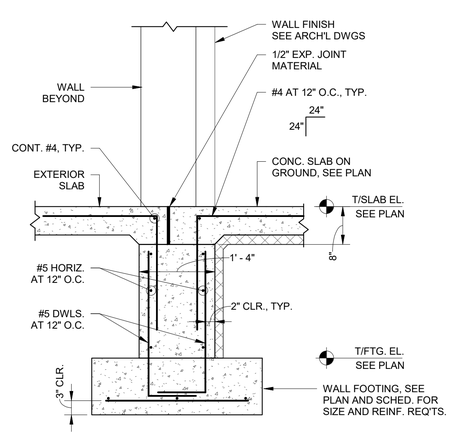

3 S2-9 FOUNDATION WALL SECTION AT MAN DOOR
3/4" = 1'-0"

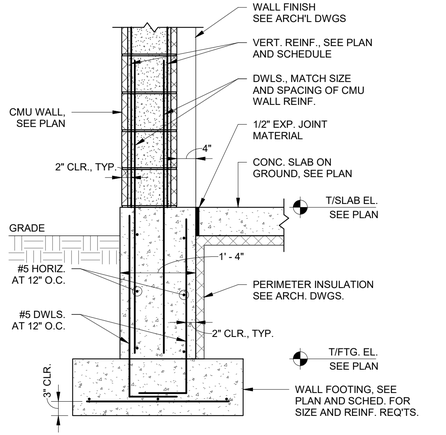

2 S2-9 FOUNDATION WALL SECTION
3/4" = 1'-0"

For Public Viewing Only-Not For Downloading

COMMONWEALTH ENGINEERS, INC.
https://commonwealthengineers.com/
MATTHEW R. MURRAY REGISTERED PE11500002 STATE OF INDIANA PROFESSIONAL ENGINEER
Signature
01/03/2025
Date
CE Solutions structural engineers
3333 Vincennes Road, Suite 330, Indianapolis, IN 46268
ceindianapolis.com

TOWN OF NEWBURGH
WARRICK COUNTY, INDIANA

WASTEWATER TREATMENT
PLANT FLOW EQ BASIN

© 2025 BY COMMONWEALTH ENGINEERS, INC. ALL RIGHTS RESERVED. REPRODUCTION BY ANY METHOD IN WHOLE OR IN PART WITHOUT PERMISSION IS PROHIBITED

Indiana811 Know what's below. 811 before you dig. 1-800-382-5544 (ITS THE LAW)

No.	Submittal / Revision	By	Date

Designed By:	Drawn By:	Checked By:
MRM	RMS	MRM
Issue Date:	Project No:	Scale:
10/03/2025	25-107	As indicated

NEW HEADWORKS BUILDING - SECTIONS AND DETAILS

Drawing No:
S2-9
Sheet: 105 OF 161

Saved: 10/2/2025 5:18:32 PM Current Local File: Autodesk Docs://Newburgh New WWTP EQ and Headworks/25-107_S2 HEADWORKS BLDG_v23.rvt

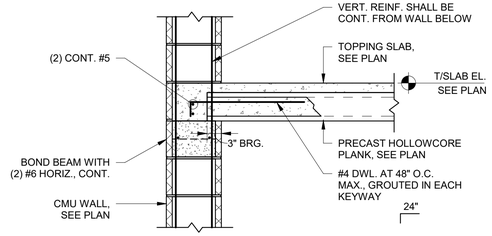

5 S2-10 **SECTION**
3/4" = 1'-0"

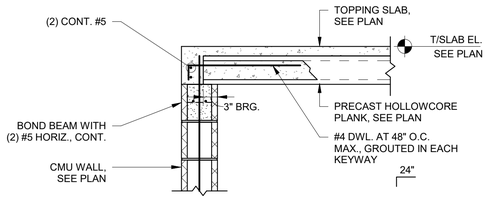

6 S2-10 **SECTION**
3/4" = 1'-0"

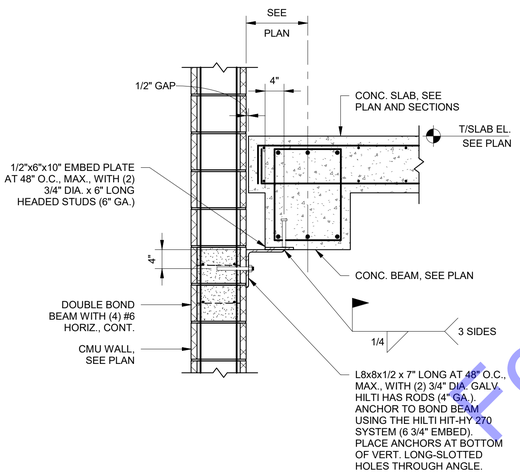

7 S2-10 **SECTION**
3/4" = 1'-0"

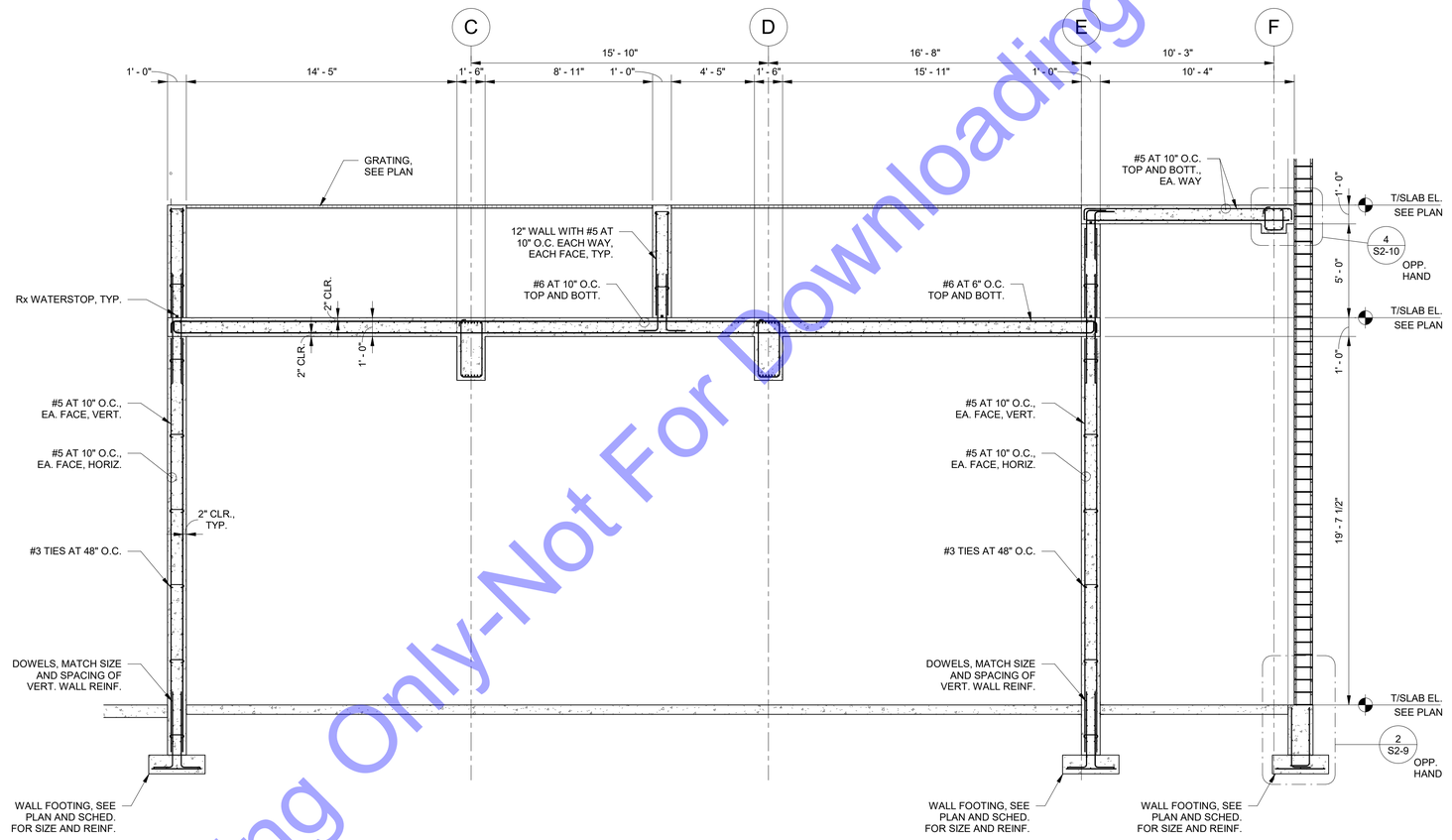

1 S2-10 **SECTION**
1/4" = 1'-0"

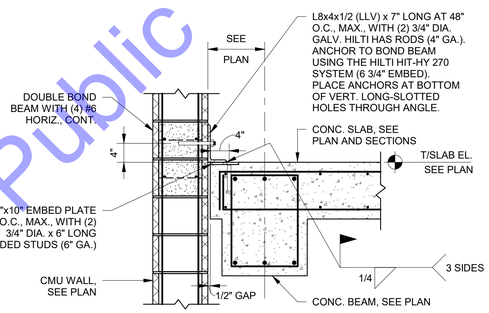

4 S2-10 **SECTION**
3/4" = 1'-0"

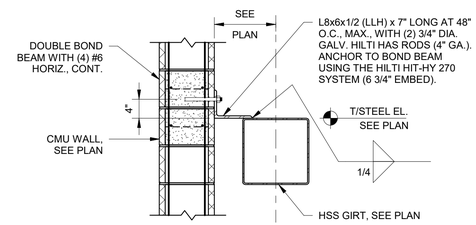

3 S2-10 **SECTION**
3/4" = 1'-0"

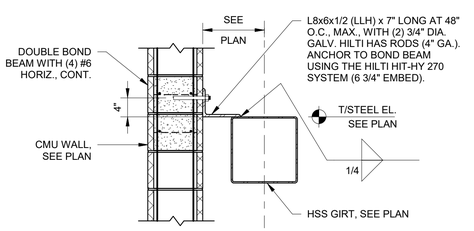

2 S2-10 **SECTION**
3/4" = 1'-0"

Saved: 10/2/2025 5:18:33 PM Current Local File: Autodesk Docs://Newburgh New WWTP EQ and Headworks/25-107_S2 HEADWORKS BLDG_v23.rvt

For Public Viewing Only-Not For Downloading

COMMONWEALTH ENGINEERS, INC.
A division of Commonwealth Engineers & Consultants, Inc.
https://commonwealthengineers.com/

MATTHEW R. MURRAY
REGISTERED
PE11500002
STATE OF INDIANA
PROFESSIONAL ENGINEER
Matt Murray 10/03/2025
Signature Date

CE Solutions
structural engineers
3333 Vision Drive, Suite 300
Fishers, IN 46038
ceindianapolis.com

TOWN OF NEWBURGH
WARRICK COUNTY, INDIANA

WASTEWATER TREATMENT
PLANT FLOW EQ BASIN

© 2025 BY COMMONWEALTH ENGINEERS, INC. ALL RIGHTS RESERVED. REPRODUCTION BY ANY METHOD IN WHOLE OR IN PART WITHOUT PERMISSION IS PROHIBITED

Indiana 811 Know what's below. 811 before you dig. 1-800-382-5544 (ITS THE LAW)

No.	Submittal / Revision	By	Date

Designed By:	Drawn By:	Checked By:
MRM	RMS	MRM
Issue Date:	Project No:	Scale:
10/03/2025	25-107	As indicated

NEW HEADWORKS BUILDING - SECTIONS AND DETAILS

Drawing No:
S2-10
Sheet: 106 OF 161

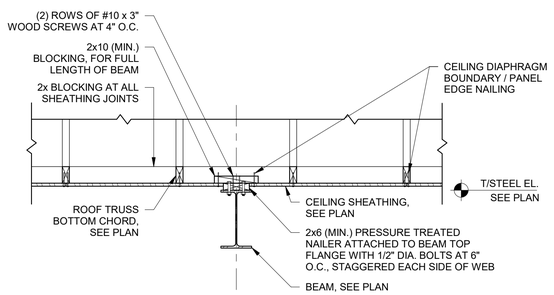

4 S2-11 SECTION
3/4" = 1'-0"

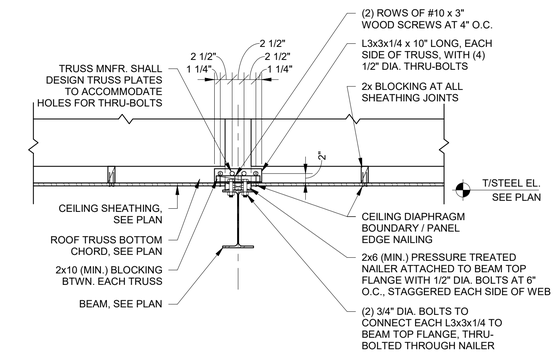

5 S2-11 SECTION
3/4" = 1'-0"

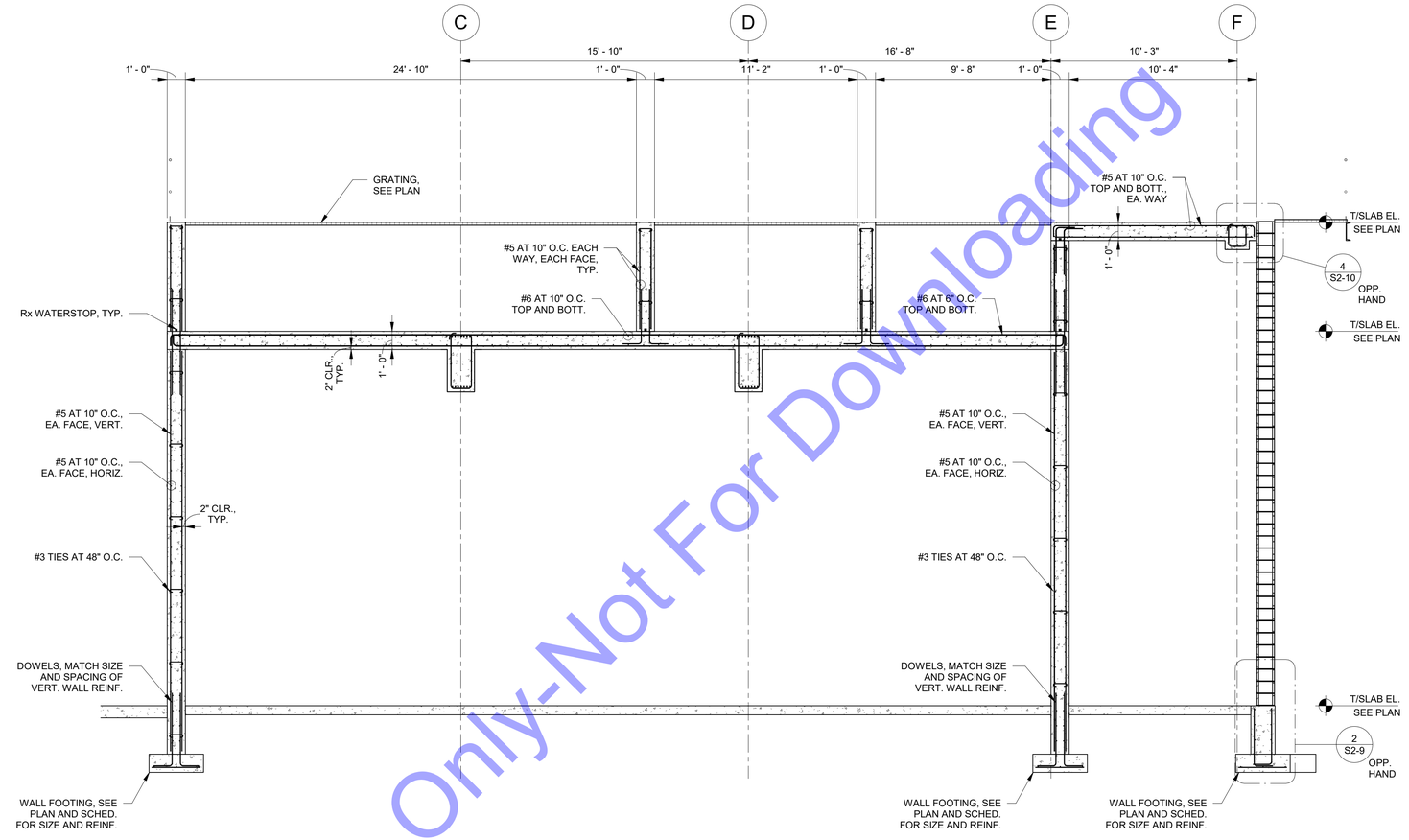

1 S2-11 SECTION
1/4" = 1'-0"

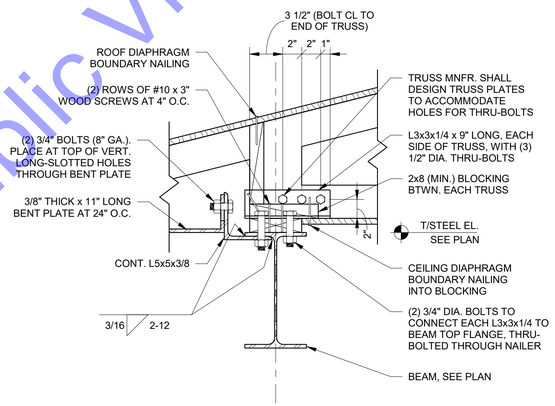

3 S2-11 SECTION
1 1/2" = 1'-0"

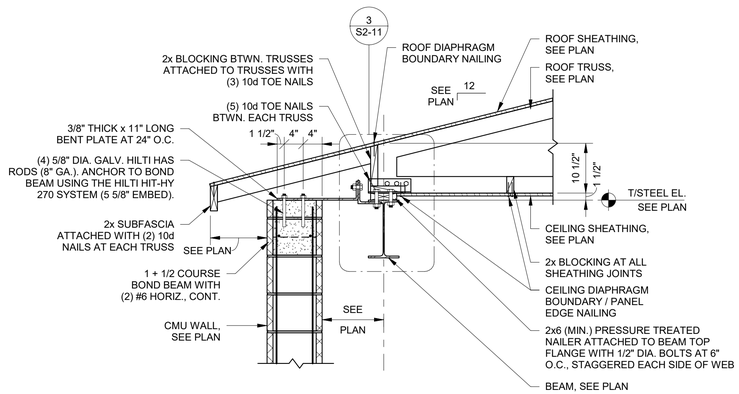

2 S2-11 SECTION
3/4" = 1'-0"

For Public Viewing Only-Not For Downloading

COMMONWEALTH ENGINEERS, INC.
https://commonwealthengineers.com/
MATTHEW R. MURRAY REGISTERED PE11500002 STATE OF INDIANA PROFESSIONAL ENGINEER
Signature
Date 10/03/2025
CE Solutions structural engineers
3700 Smith Rd. Suite 330 Fishers, IN 46038 317.915.9000 ceisolutionsllc.com

TOWN OF NEWBURGH
WARRICK COUNTY, INDIANA

WASTEWATER TREATMENT
PLANT FLOW EQ BASIN

© 2025 BY COMMONWEALTH ENGINEERS, INC. ALL RIGHTS RESERVED. REPRODUCTION BY ANY METHOD IN WHOLE OR IN PART WITHOUT PERMISSION IS PROHIBITED

Indiana 811 Know what's below. Call before you dig. 1-800-382-5544 (ITS THE LAW)

No.	Submittal / Revision	By	Date

Designed By:	Drawn By:	Checked By:
MRM	RMS	MRM
Issue Date:	Project No:	Scale:
10/03/2025	25-107	As indicated

NEW HEADWORKS BUILDING - SECTIONS AND DETAILS

Drawing No:
S2-11
Sheet: 107 OF 161

Saved: 10/2/2025 5:18:35 PM Current Local File: Autodesk Docs://Newburgh New WWTP EQ and Headworks/25-107_S2 HEADWORKS BLDG_v23.rvt

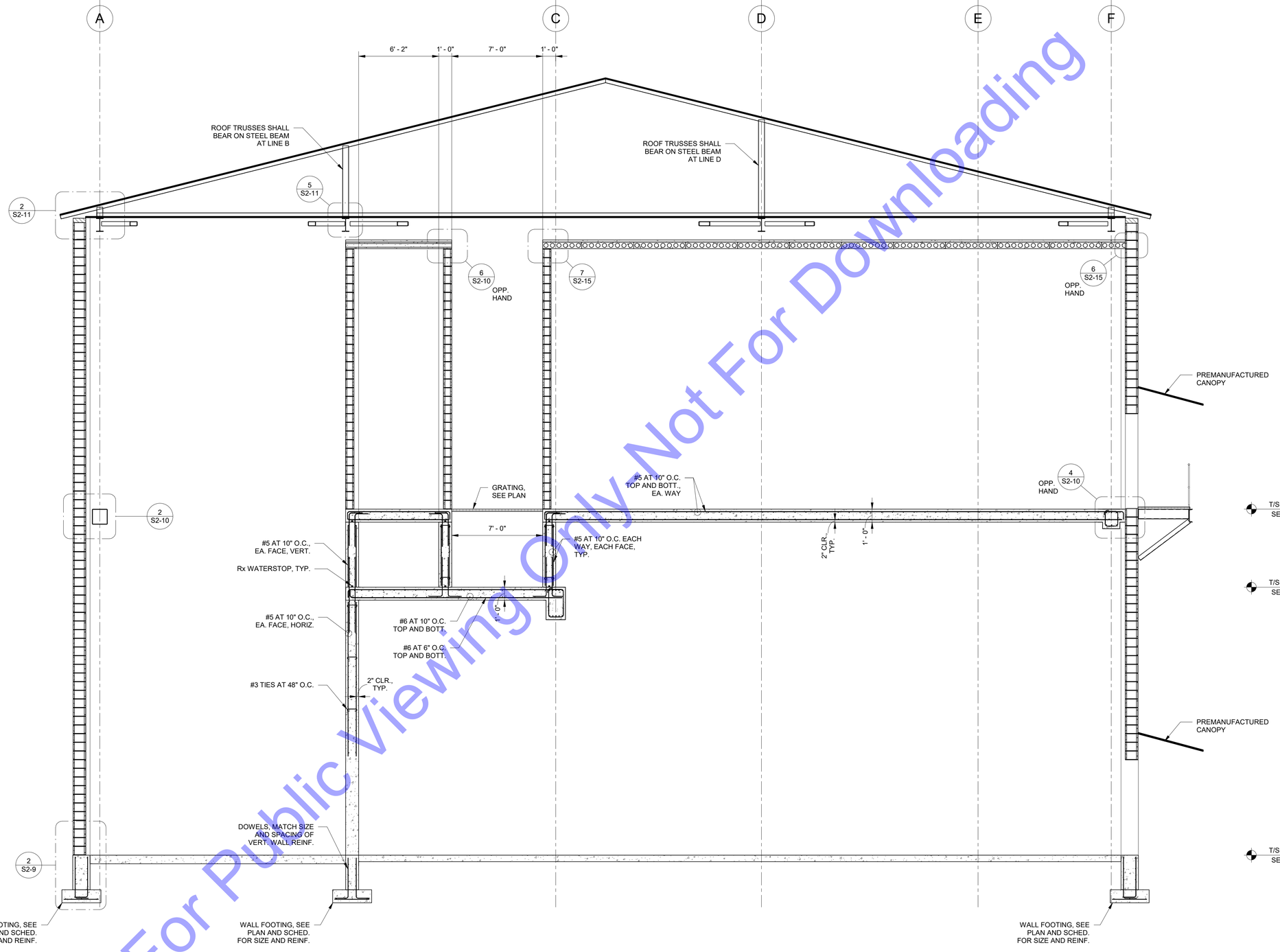

1 S2-12 SECTION
1/4" = 1'-0"

For Public Viewing Only - Not For Downloading

COMMONWEALTH ENGINEERS, INC.
A wealth of resources to realize a common goal.
https://commonwealthengineers.com/

MATTHEW R. MURRAY
REGISTERED
PE11500002
STATE OF INDIANA
PROFESSIONAL ENGINEER
Matt Murray 10/03/2025
Signature Date

CE Solutions
structural engineers
8770 North St., Ste. 100
Fishers, IN 46038
317.818.1912
cesolutionsinc.com

TOWN OF NEWBURGH
WARRICK COUNTY, INDIANA

WASTEWATER TREATMENT
PLANT FLOW EQ BASIN

© 2025 BY COMMONWEALTH ENGINEERS, INC. ALL RIGHTS RESERVED. REPRODUCTION BY ANY METHOD IN WHOLE OR IN PART WITHOUT PERMISSION IS PROHIBITED

Indiana811
Know what's below. 811 before you dig.
1-800-382-5544
(ITS THE LAW)

No.	Submittal / Revision	By	Date

Designed By:	Drawn By:	Checked By:
MRM	RMS	MRM
Issue Date:	Project No:	Scale:
10/03/2025	25-107	1/4" = 1'-0"

NEW HEADWORKS BUILDING - SECTIONS AND DETAILS

Drawing No:
S2-12
Sheet: 108 OF 161

Saved: 10/2/2025 5:18:36 PM Current Local File: Autodesk Docs://Newburgh New WWTP EQ and Headworks/25-107_S2 HEADWORKS BLDG_v23.rvt

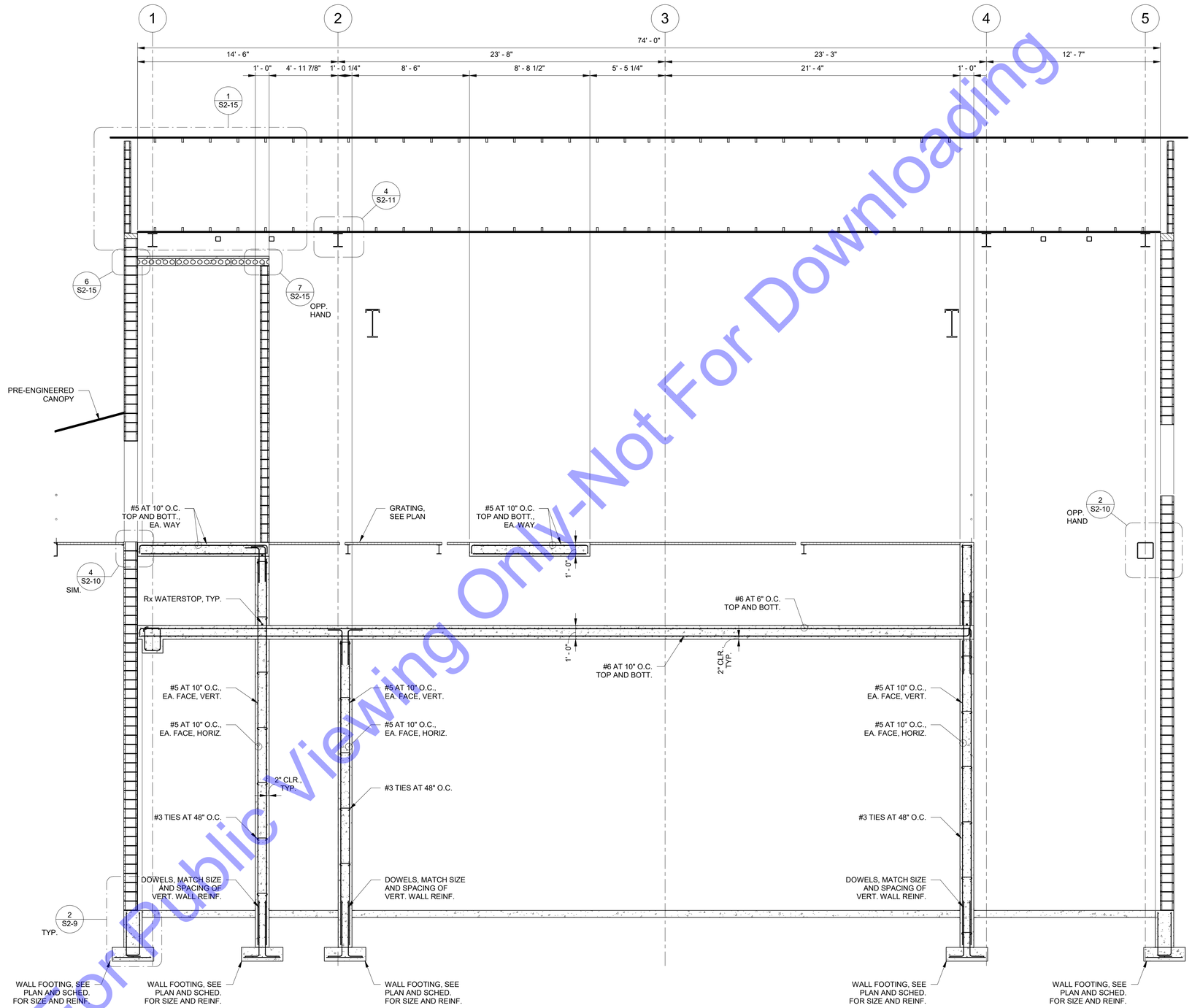

1 S2-13 **SECTION**
1/4" = 1'-0"

For Public Viewing Only-Not For Downloading

COMMONWEALTH ENGINEERS, INC.
A network of resources to create a common goal.
https://commonwealthengineers.com/

MATTHEW R. MURRAY
REGISTERED
PE11500002
STATE OF INDIANA
PROFESSIONAL ENGINEER
10/03/2025
Signature Date

CE Solutions
structural engineers
3500 Lacon Road, Suite 300
Hilliard, OH 43026
ceoutlook.com

TOWN OF NEWBURGH
WARRICK COUNTY, INDIANA

WASTEWATER TREATMENT PLANT FLOW EQ BASIN

© 2025 BY COMMONWEALTH ENGINEERS, INC. ALL RIGHTS RESERVED. REPRODUCTION BY ANY METHOD IN WHOLE OR IN PART WITHOUT PERMISSION IS PROHIBITED

Indiana 811 Know what's below. 811 before you dig. 1-800-382-5544 (ITS THE LAW)

No.	Submittal / Revision	By	Date

Designed By:	Drawn By:	Checked By:
MRM	RMS	MRM
Issue Date:	**Project No:**	**Scale:**
10/03/2025	25-107	1/4" = 1'-0"

NEW HEADWORKS BUILDING - SECTIONS AND DETAILS

Drawing No:
S2-13
Sheet: 109 OF 161

Saved: 10/2/2025 5:18:37 PM Current Local File: Autodesk Docs://Newburgh New WWTP EQ and Headworks/25-107_S2 HEADWORKS BLDG_v23.rvt

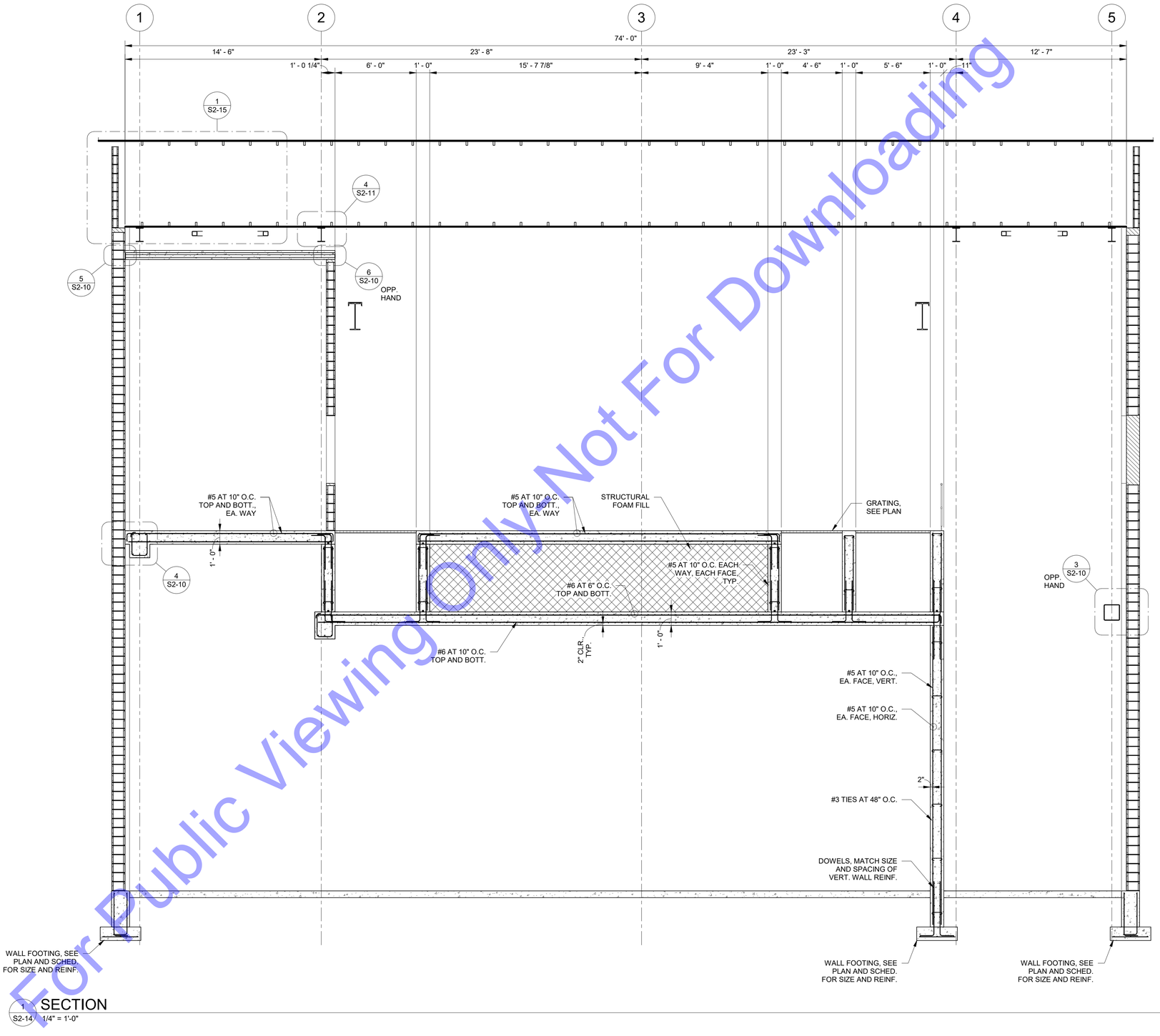

1 S2-14 **SECTION** 1/4" = 1'-0"

Not For Downloading
For Public Viewing Only

Saved: 10/2/2025 5:18:38 PM Current Local File: Autodesk Docs://Newburgh New WWTP EQ and Headworks/25-107_S2 HEADWORKS BLDG_v23.rvt

COMMONWEALTH ENGINEERS, INC.
A leader in resources to create a better place.
https://commonwealthengineers.com/

MATTHEW R. MURRAY
REGISTERED
PE11500002
STATE OF INDIANA
PROFESSIONAL ENGINEER
Signature 10/03/2025 Date

CE Solutions structural engineers
Structural Engineering Solutions, LLC
Fishers, IN 46038
317.595.3330
ceisolutionsllc.com

TOWN OF NEWBURGH
WARRICK COUNTY, INDIANA

WASTEWATER TREATMENT
PLANT FLOW EQ BASIN

© 2025 BY COMMONWEALTH ENGINEERS, INC. ALL RIGHTS RESERVED. REPRODUCTION BY ANY METHOD IN WHOLE OR IN PART WITHOUT PERMISSION IS PROHIBITED

Indiana 811 Know what's below. 811 before you dig. 1-800-382-5544 (ITS THE LAW)

No.	Submittal / Revision	By	Date

Designed By:	Drawn By:	Checked By:
MRM	RMS	MRM
Issue Date:	Project No:	Scale:
10/03/2025	25-107	1/4" = 1'-0"

NEW HEADWORKS BUILDING - SECTIONS AND DETAILS

Drawing No:
S2-14
Sheet: 110 OF 161

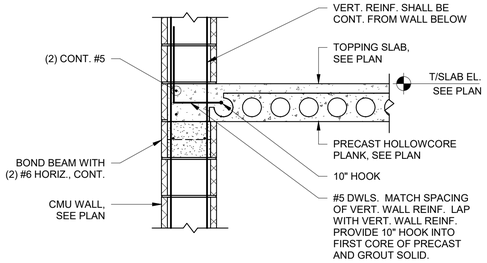

6 S2-15 **SECTION**
3/4" = 1'-0"

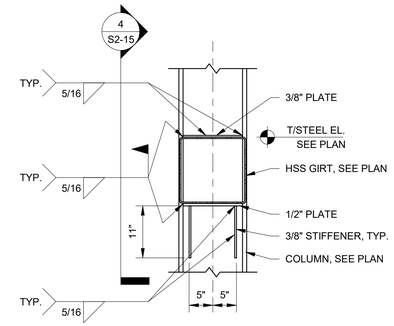

3 S2-15 **CONNECTION DETAIL**
3/4" = 1'-0"

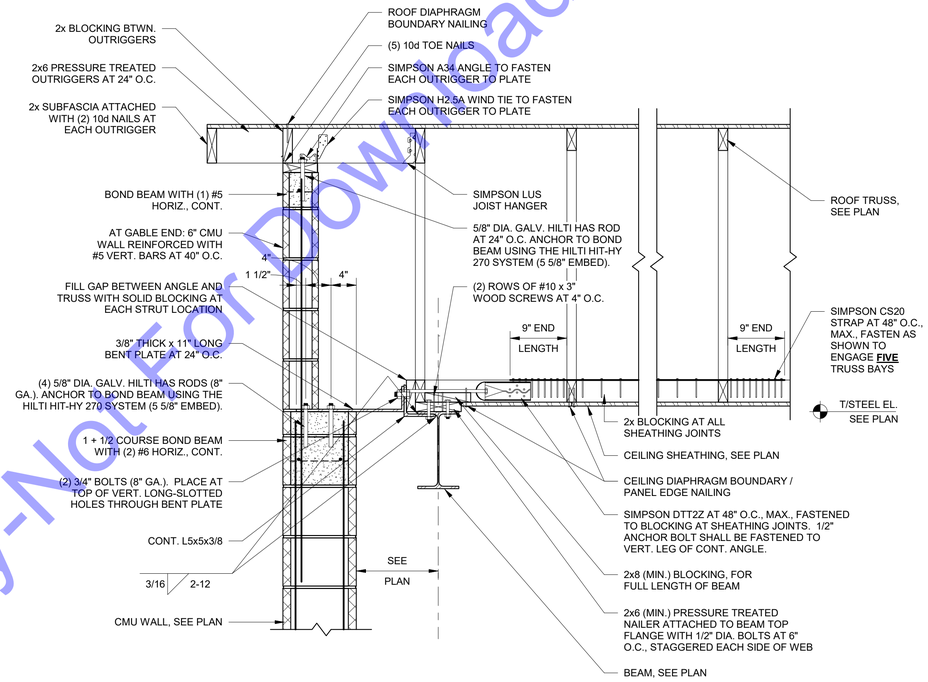

1 S2-15 **SECTION**
1" = 1'-0"

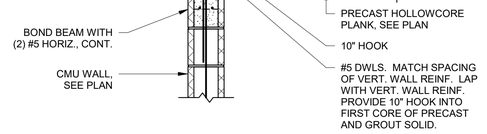

7 S2-15 **SECTION**
3/4" = 1'-0"

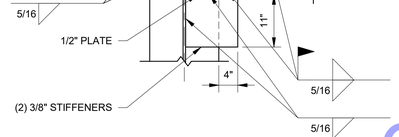

4 S2-15 **CONNECTION DETAIL**
3/4" = 1'-0"

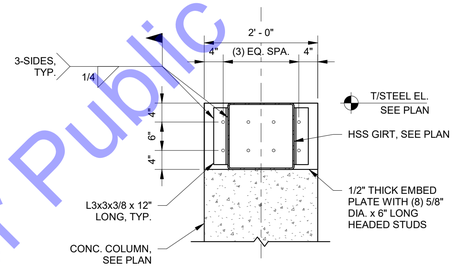

NOTE: PROVIDE 1/2" GAP BETWEEN END OF HSS GIRT AND EMBED PLATE

5 S2-15 **CONNECTION DETAIL**
3/4" = 1'-0"

For Public Viewing Only-Not for Downloading

COMMONWEALTH ENGINEERS, INC.
https://commonwealthengineers.com/
MATTHEW R. MURRAY REGISTERED PE11500002 STATE OF INDIANA PROFESSIONAL ENGINEER
Signature Date 10/03/2025
CE Solutions structural engineers
10333 N. Meridian St. Suite 330 Indianapolis, IN 46290 ceisolutionsllc.com

TOWN OF NEWBURGH
WARRICK COUNTY, INDIANA

WASTEWATER TREATMENT PLANT FLOW EQ BASIN

© 2025 BY COMMONWEALTH ENGINEERS, INC. ALL RIGHTS RESERVED. REPRODUCTION BY ANY METHOD IN WHOLE OR IN PART WITHOUT PERMISSION IS PROHIBITED

Indiana811 Know what's below. Dig before you dig. 1-800-382-5544 (ITS THE LAW)

No.	Submittal / Revision	By	Date

Designed By:	Drawn By:	Checked By:
MRM	RMS	MRM
Issue Date:	Project No:	Scale:
10/03/2025	25-107	As indicated

NEW HEADWORKS BUILDING - SECTIONS AND DETAILS

Drawing No:
S2-15
Sheet: 111 OF 161

Saved: 10/2/2025 5:18:39 PM Current Local File: Autodesk Docs://Newburgh New WWTP EQ and Headworks/25-107_S2 HEADWORKS BLDG_v23.rvt

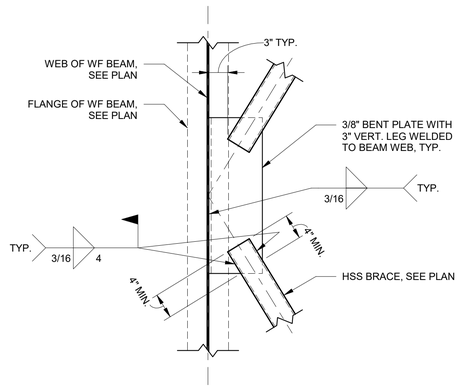

7 S2-16 CONNECTION DETAIL

1" = 1'-0"

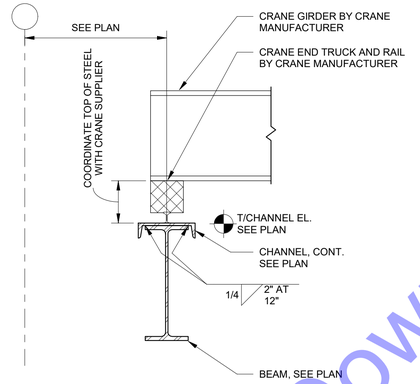

4 S2-16 SECTION

3/4" = 1'-0"

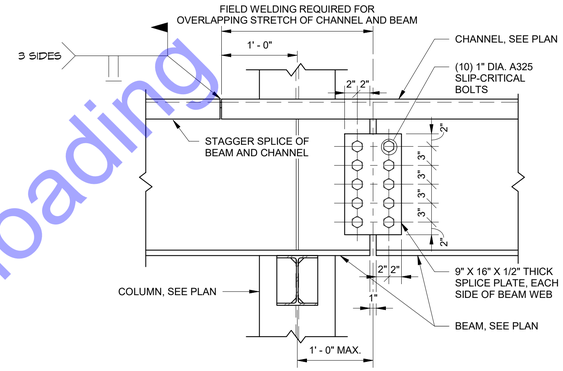

1 S2-16 CRANE SUPPORT BEAM SPLICE

1" = 1'-0"

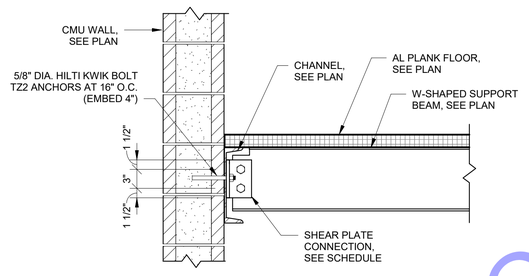

8 S2-16 SECTION

1" = 1'-0"

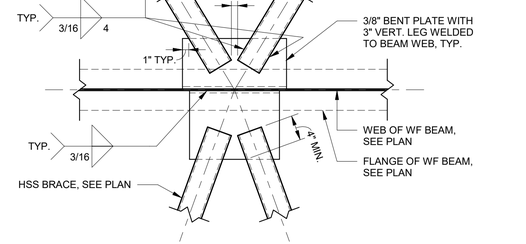

5 S2-16 CRANE SUPPORT FRAMING AT COLUMN

3/4" = 1'-0"

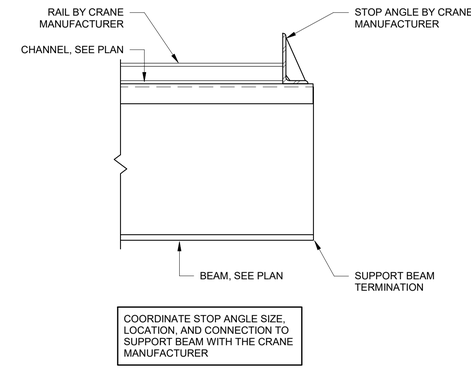

2 S2-16 CRANE STOP ANGLE

1" = 1'-0"

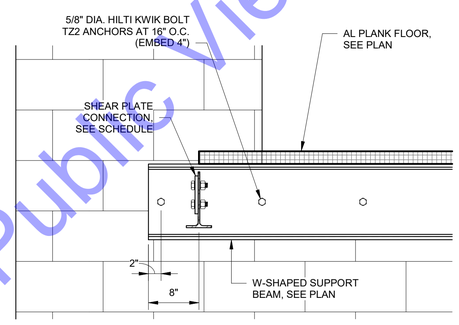

9 S2-16 SECTION

1" = 1'-0"

6 S2-16 CONNECTION DETAIL

1" = 1'-0"

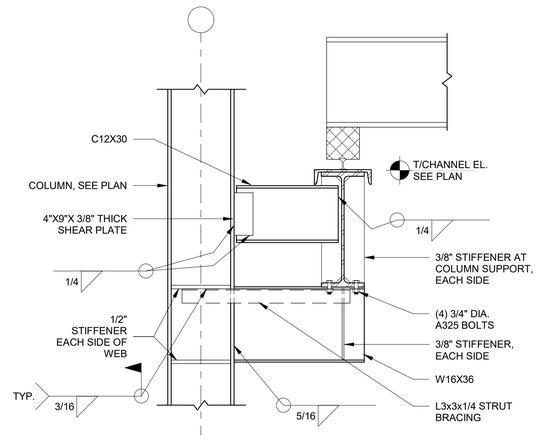

3 S2-16 CRANE SUPPORT FRAMING AT COLUMN

3/4" = 1'-0"

For Public Viewing Only-Not For Downloading

COMMONWEALTH ENGINEERS, INC.
https://commonwealthengineers.com/
MATTHEW R. MURRAY REGISTERED PE11500002 STATE OF INDIANA PROFESSIONAL ENGINEER
Signature
Date 10/03/2025
CE Solutions structural engineers
Fishers, IN 46038

TOWN OF NEWBURGH
WARRICK COUNTY, INDIANA

WASTEWATER TREATMENT
PLANT FLOW EQ BASIN

© 2025 BY COMMONWEALTH ENGINEERS, INC. ALL RIGHTS RESERVED. REPRODUCTION BY ANY METHOD IN WHOLE OR IN PART WITHOUT PERMISSION IS PROHIBITED
Indiana811 Know what's below. 811 before you dig. 1-800-382-5544 (ITS THE LAW)

No.	Submittal / Revision	By	Date

Designed By:	Drawn By:	Checked By:
MRM	RMS	MRM
Issue Date:	Project No:	Scale:
10/03/2025	25-107	As indicated

NEW HEADWORKS BUILDING - SECTIONS AND DETAILS

Drawing No:
S2-16
Sheet: 112 OF 161

Saved: 10/2/2025 5:18:40 PM Current Local File: Autodesk Docs://Newburgh New WWTP EQ and Headworks/25-107_S2 HEADWORKS BLDG_v23.rvt

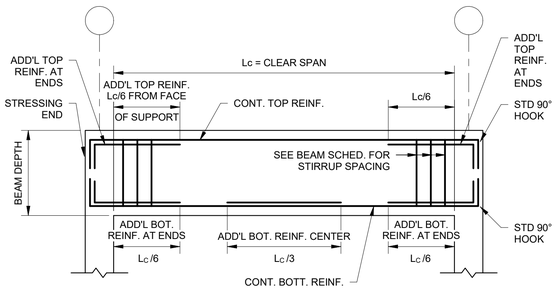

TYP. SINGLE SPAN REINFORCED CONCRETE BEAM

6 S2-17 — 3/4" = 1'-0"

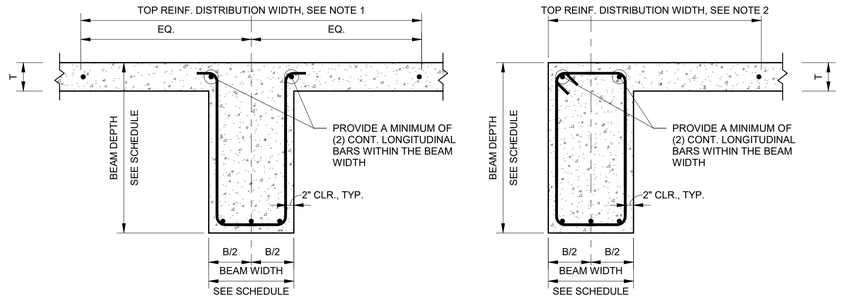

TYP. INTERIOR BEAM — TYP. EDGE BEAM

NOTES:

1. LONGITUDINAL TOP REINFORCEMENT DISTRIBUTION WIDTH FOR INTERIOR BEAMS EQUALS THE LESSER OF:
   A. 10% OF THE BEAM SPAN LENGTH
   B. 12*T + B
2. LONGITUDINAL REINFORCEMENT DISTRIBUTION WIDTH FOR EDGE BEAMS EQUALS THE LESSER OF:
   A. 10% OF THE BEAM SPAN LENGTH
   B. 6*T + B

TYP. BEAM REINF. DETAILS

3 S2-17 — 3/4" = 1'-0"

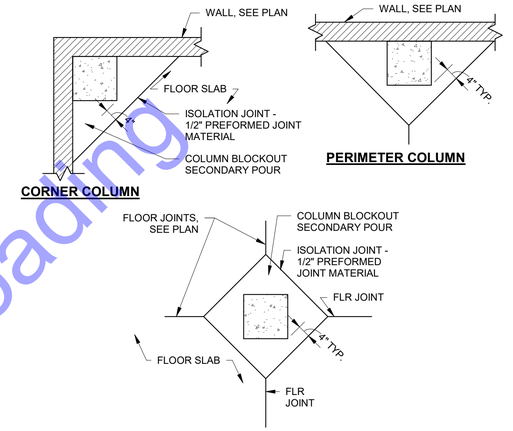

TYP. CONC. COLUMN ISOLATION JOINTS

1 S2-17 — 1/2" = 1'-0"

REINFORCED CONCRETE BEAM SCHEDULE

BEAM MARK	BEAM TYPE	SIZE (IN)	LONGITUDINAL REINFORCEMENT				STIRRUPS				NOTES
		WIDTHxDEPTH	CONT.	ADDITIONAL							
CB-18x40	MULTI-SPAN	18x40	TOP	AT ENDS	AT SUPPORTS	-	LOCATION	SIZE	TYPE	SPACING	-
			(7) #8	-	-	-	EA. END	#4	S2	(20)@3"	
			BOTTOM	AT ENDS	AT SUPPORTS	CENTER	BALANCE	#4	S2	6"	
			(6) #8	-	-	-		-	-	-	
CB-18x30	MULTI-SPAN	18x30	TOP	AT ENDS	AT SUPPORTS	-	LOCATION	SIZE	TYPE	SPACING	-
			(5) #8	-	-	-	EA. END	#4	S1	(5)@5"	
			BOTTOM	AT ENDS	AT SUPPORTS	CENTER	BALANCE	#4	S1	10"	
			(3) #8	-	-	-		-	-	-	
CB-18x24	VARIES	18x24	TOP	AT ENDS	AT SUPPORTS	-	LOCATION	SIZE	TYPE	SPACING	-
			(3) #8	-	-	-	EA. END	#4	S1	(5)@4"	
			BOTTOM	AT ENDS	AT SUPPORTS	CENTER	BALANCE	#4	S1	6"	
			(3) #8	-	-	-		-	-	-	
CB-16x18	MULTI-SPAN	16x18	TOP	AT ENDS	AT SUPPORTS	-	LOCATION	SIZE	TYPE	SPACING	-
			(3) #8	-	-	-	EA. END	#4	S1	(5)@4"	
			BOTTOM	AT ENDS	AT SUPPORTS	CENTER	BALANCE	#4	S1	6"	
			(3) #8	-	-	-		-	-	-	

REINFORCED CONCRETE BEAM SCHEDULE

7 S2-17 — 1/2" = 1'-0"

TYP. STIRRUP TYPES

4 S2-17 — 3/4" = 1'-0"

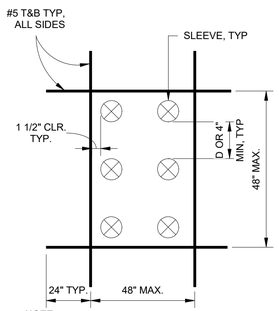

NOTE:
PROVIDE TRIM REINFORCEMENT AS SHOWN AROUND GROUPS OF SLEEVES. NOTIFY STRUCTURAL ENGINEER FOR FURTHER REVIEW IF MINIMUM SPACING IS NOT MET.

PLAN - ADDITIONAL REINFORCEMENT

NOTES:
1. ALUMINUM MATERIALS SHALL NOT BE EMBEDDED IN CONCRETE.
2. SLEEVES SHALL NOT BE LOCATED WITHIN 24" OF COLUMNS WITHOUT ENGINEERS APPROVAL.
3. SLEEVES SHALL NOT INTERRUPT TYPICAL REINFORCEMENT INDICATED ON PLANS.

TYP. REINF. AT SLEEVES THRU SLAB

8 S2-17 — 3/4" = 1'-0"

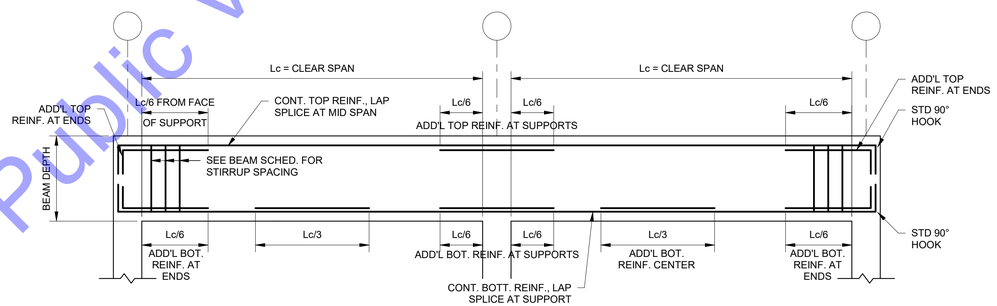

TYP. MULTI-SPAN REINFORCED CONCRETE BEAM

5 S2-17 — 3/4" = 1'-0"

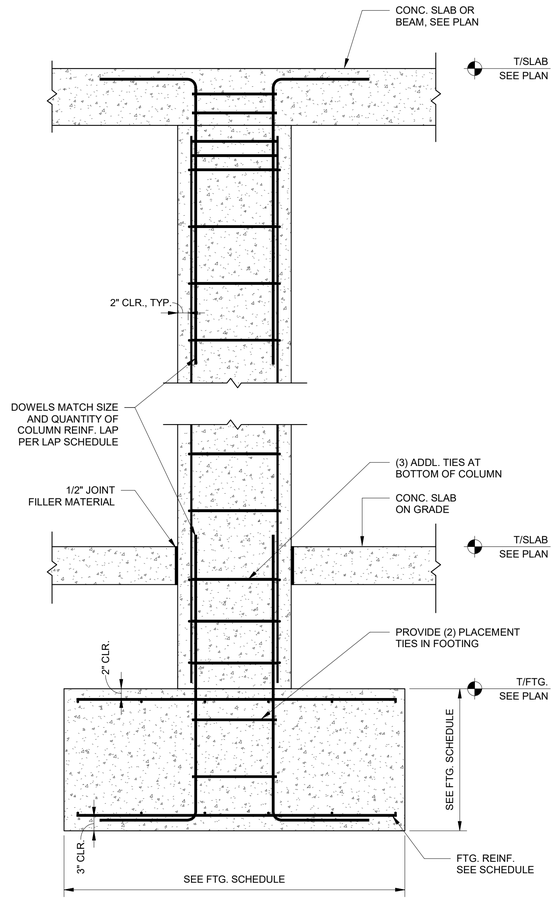

TYPICAL CONC. COLUMN FOUNDATION DETAIL

2 S2-17 — 3/4" = 1'-0"

For Public Viewing Only-Not For Downloading

COMMONWEALTH ENGINEERS, INC.
https://commonwealthengineers.com/
MATTHEW R. MURRAY REGISTERED PE11500002 STATE OF INDIANA PROFESSIONAL ENGINEER
Signature Date 10/03/2025
CE Solutions structural engineers
201 E. Jefferson Blvd. Suite 300 | South Bend, IN 46601 | 574.968.0288 | ceindy@ceindy.com

TOWN OF NEWBURGH
WARRICK COUNTY, INDIANA

WASTEWATER TREATMENT PLANT FLOW EQ BASIN

© 2025 BY COMMONWEALTH ENGINEERS, INC. ALL RIGHTS RESERVED. REPRODUCTION BY ANY METHOD IN WHOLE OR IN PART WITHOUT PERMISSION IS PROHIBITED

Indiana811 Know what's below. 811 before you dig. 1-800-382-5544 (ITS THE LAW)

No.	Submittal / Revision	By	Date

Designed By:	Drawn By:	Checked By:
MRM	RMS	MRM
Issue Date:	Project No:	Scale:
10/03/2025	25-107	As indicated

NEW HEADWORKS BUILDING - SECTIONS AND DETAILS

Drawing No: **S2-17**

Sheet: 113 OF 161

Saved: 10/2/2025 5:18:41 PM Current Local File: Autodesk Docs://Newburgh New WWTP EQ and Headworks/25-107_S2 HEADWORKS BLDG_v23.rvt

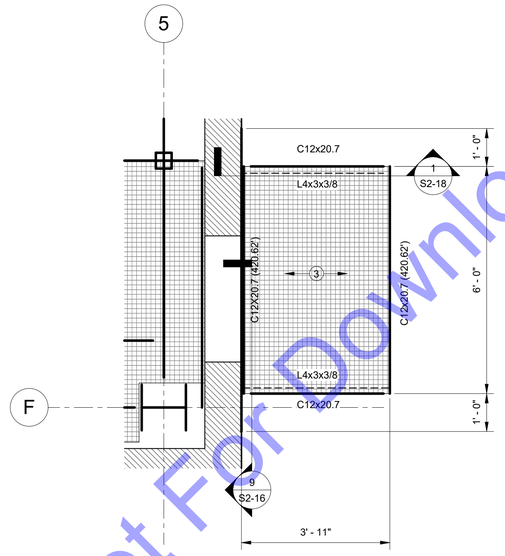

2 S2-18 NORTH PLATFORM - MA-1
1/2" = 1'-0"

PLATFORM PLAN NOTES

○ INDICATES NOTE REFERENCED IN PLAN

1. SEE THE S0-SERIES SHEETS FOR GENERAL STRUCTURAL NOTES AND TYPICAL STRUCTURAL DETAILS.
2. ALL DIMENSIONS AND ELEVATIONS SHALL BE VERIFIED PRIOR TO FABRICATION, CONSTRUCTION OR ERECTION. THE GENERAL CONTRACTOR SHALL ASSUME RESPONSIBILITY FOR ANY DISCREPANCIES.
3. 2-INCH HEAVY DUTY ALUMINUM PLANK (PUNCHED), MAXIMUM WEIGHT PER PANEL = 88 LBS. APPROX. SEE GENERAL NOTES AND SPECIFICATIONS FOR MORE INFORMATION.
4. ALL STEEL SHALL BE HOT-DIP GALVANIZED.

MANDATORY ALTERNANTE (MA-2)
REPLACE ALL GALVANIZED STRUCTURAL STEEL ASSOCIATED WITH THE EXTERIOR STAIRS AND PLATFORM ASSEMBLIES WITH TYPE 316 STAINLESS STEEL. THIS INCLUDES, BUT IS NOT LIMITED TO, STRINGERS, CHANNELS, WIDE-FLANGE BEAMS, PLATES, ANGLES, BOLTS, AND ALL OTHER STRUCTURAL STEEL COMPONENTS THAT ARE PART OF EACH ASSEMBLY. REFER TO SPECIFICASTION DS-29 FOR INFORMATION.

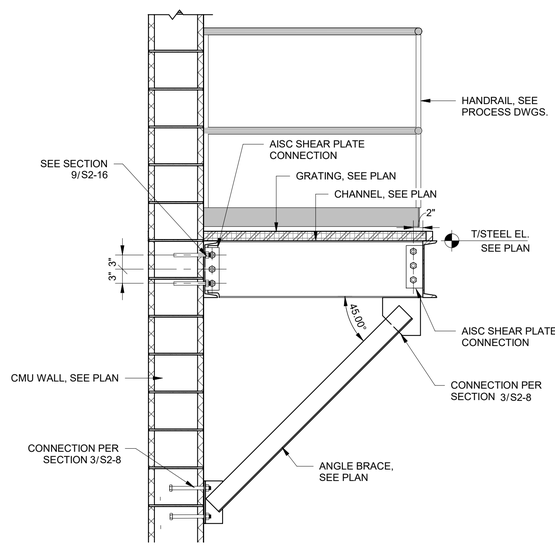

1 S2-18 SECTION AT PLATFORM - MA-1
3/4" = 1'-0"

For Public Viewing Only-Not For Download

COMMONWEALTH ENGINEERS, INC.
https://commonwealthengineers.com/
MATTHEW R. MURRAY REGISTERED PE11500002 STATE OF INDIANA PROFESSIONAL ENGINEER
Signature 10/03/2025 Date
CE Solutions structural engineers
3550 Stanley Blvd. Suite 330 Plano, IN 46268
ceisolutionsllc.com

TOWN OF NEWBURGH
WARRICK COUNTY, INDIANA

WASTEWATER TREATMENT PLANT FLOW EQ BASIN

© 2025 BY COMMONWEALTH ENGINEERS, INC. ALL RIGHTS RESERVED. REPRODUCTION BY ANY METHOD IN WHOLE OR IN PART WITHOUT PERMISSION IS PROHIBITED

Indiana811 Know what's below. 811 before you dig. 1-800-382-5544 (ITS THE LAW)

No.	Submittal / Revision	By	Date

Designed By:	Drawn By:	Checked By:
JAB	JAB	MRM
Issue Date:	Project No:	Scale:
10/03/2025	25-107	As indicated

NEW HEADWORKS BUILDING - MANDATORY ALTERNANATE DETAILS

Drawing No:
S2-18
Sheet: 114 OF 161

Saved: 10/2/2025 5:18:42 PM Current Local File: Autodesk Docs://Newburgh New WWTP EQ and Headworks/25-107_S2 HEADWORKS BLDG_v23.rvt

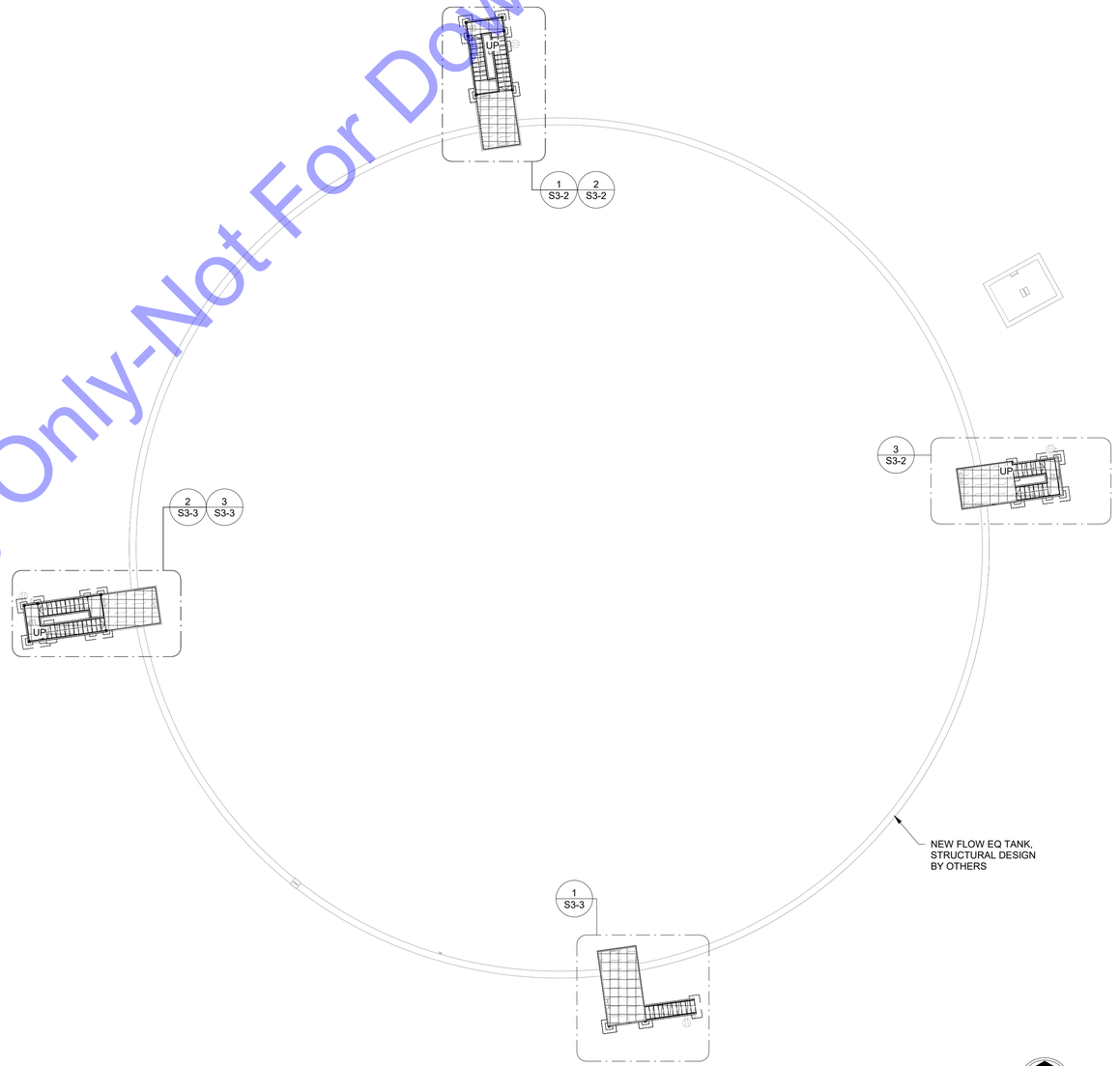

1 S3-1 NEW FLOW EQ TANK - OVERALL PLAN
1/16" = 1'-0"

For Public Viewing Only-Not For Downloading

Saved: 10/2/2025 5:02:23 PM Current Local File: Autodesk Docs://Newburgh New WWTP EQ and Headworks/25-107_S3 EQ TANK_v23.rvt

COMMONWEALTH ENGINEERS, INC.
A wealth of resources to create a common goal.
https://commonwealthengineers.com/

MATTHEW R. MURRAY
REGISTERED
PE11500002
STATE OF INDIANA
PROFESSIONAL ENGINEER
Matt Murray 10/03/2025
Signature Date

CE Solutions
structural engineers
8770 North St., Ste. 100
Fishers, IN 46038
317.818.1912
cesolutionsinc.com

TOWN OF NEWBURGH
WARRICK COUNTY, INDIANA

WASTEWATER TREATMENT
PLANT FLOW EQ BASIN

© 2025 BY COMMONWEALTH ENGINEERS, INC. ALL RIGHTS RESERVED. REPRODUCTION BY ANY METHOD IN WHOLE OR IN PART WITHOUT PERMISSION IS PROHIBITED

Indiana 811
Know what's below. 811 before you dig.
1-800-382-5544
(ITS THE LAW)

No.	Submittal / Revision	By	Date

Designed By:	Drawn By:	Checked By:
JTM	JTM	MRM
Issue Date:	Project No:	Scale:
10/03/2025	25-107	1/16" = 1'-0"

NEW FLOW EQ TANK - OVERALL PLAN

Drawing No:
S3-1

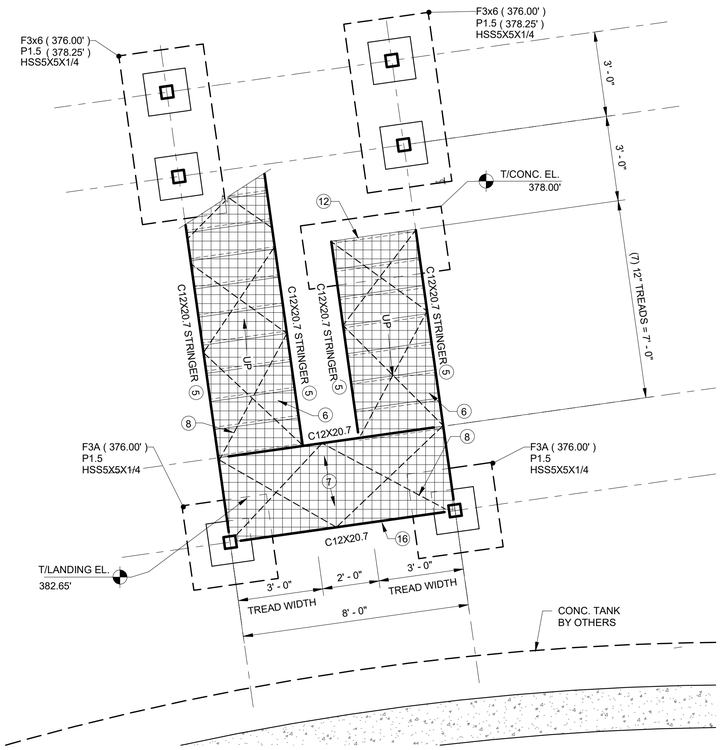

2 S3-2 NORTH STAIR FRAMING PLAN (LOW)
3/8" = 1'-0"

SPREAD FOOTING SCHEDULE					
MARK	WIDTH	LENGTH	THICK.	BOTT. LONG. REINF.	BOTT. TRANS. REINF.
F3A	3'-0"	3'-0"	1'-0"	3 - #5 T & B	3 - #5 T & B
F3x6	3'-0"	6'-0"	1'-0"	3 - #5 T & B	6 - #5 T & B

PEDESTAL / CONCRETE COLUMN SCHEDULE						
MARK	WIDTH	LENGTH	TYPE	V. REINF.	TIES	REFERENCE
P1.5	1'-6"	1'-6"	B	4 - #8	3 x #3 AT 3" O.C. TOP, #3 AT 12" O.C. REMAINDER	3/S0-4

COLUMN SCHEDULE			
COLUMN SIZE	BASE PLATE	ANCHOR BOLTS	REFERENCE
HSS5x5x1/4	PL 3/4" x 12" x 12"	4 - 3/4" DIA.	9/S0-4

STAIR FRAMING PLAN NOTES

○ INDICATES NOTE REFERENCED IN PLAN

1. SEE THE S0-SERIES SHEETS FOR GENERAL STRUCTURAL NOTES AND TYPICAL STRUCTURAL DETAILS.
2. ALL DIMENSIONS AND ELEVATIONS SHALL BE VERIFIED PRIOR TO FABRICATION, CONSTRUCTION OR ERECTION. THE GENERAL CONTRACTOR SHALL ASSUME RESPONSIBILITY FOR ANY DISCREPANCIES.
3. SEE SITE PLAN FOR ALL FINAL GRADE ELEVATIONS.
4. ALL STEEL SHALL BE HOT-DIP GALVANIZED.
5. SEE PLAN FOR STEEL STAIR STRINGER MIN. SIZE REQUIREMENTS. STEEL FABRICATOR SHALL DETERMINE REQUIRED STAIR STRINGER PROFILE TO ACCOMMODATE PROVIDED STAIR LENGTH DIMENSIONS AND ELEVATION CHANGE.
6. STAIR TREADS SHALL BE 1-3/4" THICK X 9" WIDE TYPE "F", PUNCHED, HEAVY DUTY ALUMINUM PLANK UNLESS OTHERWISE NOTED. CONTRACTOR SHALL DETERMINE REQUIRED STAIR STRINGER RISE / RUN LAYOUT. SEE TYPICAL STAIR DETAILS AND SPECIFICATIONS FOR ADDITIONAL INFORMATION.
7. STAIR LANDING GRATING SHALL BE 2" HEAVY DUTY, PUCHED ALUMINUM PLANK UNLESS OTHERWISE NOTED. SEE TYPICAL STAIR DETAILS AND SPECIFICATIONS FOR ADDITIONAL INFORMATION.
8. PROVIDE L2X2X1/4 DIAGONAL BRACE AT 5'-0" O.C. MAX ALONG ALL STAIR FLIGHTS AND AT EACH STAIR LANDING; WELD L2X2X1/4 BRACE MEMBERS TO STRINGER BOTTOM CHORDS.
9. FLOOR SHALL BE 2" HEAVY DUTY, UNPUCHED ALUMINUM PLANK.
10. FX (XXX.XX') DENOTES FOOTING MARK, SEE SCHEDULE
11. PX (XXX.XX') DENOTES PEDESTAL MARK, SEE SCH
12. BASE OF STAIR SHALL BEAR ON STAIR LANDING CONCRETE FOUNDATION PER DETAIL 4/S0-9. TOP OF CONCRETE STAIR LANDING SHALL BE 3-IN ABOVE FINAL GRADE. G.C. SHALL CONFIRM LANDING ELEVATION SHOWN ON PLAN WITH GRADING PLAN.
13. THE FOUNDATION DESIGNS SHOWN ARE BASED ON AN ALLOWABLE BEARING PRESSURE OF 4,000 PSF. ALL FOUNDATIONS SHALL BEAR ON SOIL IMPROVED BY THE INSTALLATION OF EITHER CONTROLLED MODULUS COLUMNS (CMC), OR RIGID INCLUSIONS –AT GENERAL CONTRACTOR'S OPTION. SEE SPECIFICATION FOR MORE INFORMATION. COORDINATE SOIL IMPROVEMENT REQUIREMENTS WITH DELEGATED SPECIALTY TANK DESIGN PRIOR TO DESIG AND INSTALLATION OF THE SOIL IMPROVEMENT SYSTEM
14. WALL SIZE BY SPECIALTY TANK CONTRACTOR
15. PROVIDE KNEE BRACING TO PLATFORM FRAMING PER DETAILS 4/S0-7 AND 5/S0-7
16. PROVIDE LATERAL BRACING TO STAIR LANDING POSTS PER DETAILS 6/S0-7 OR 7/S0-7

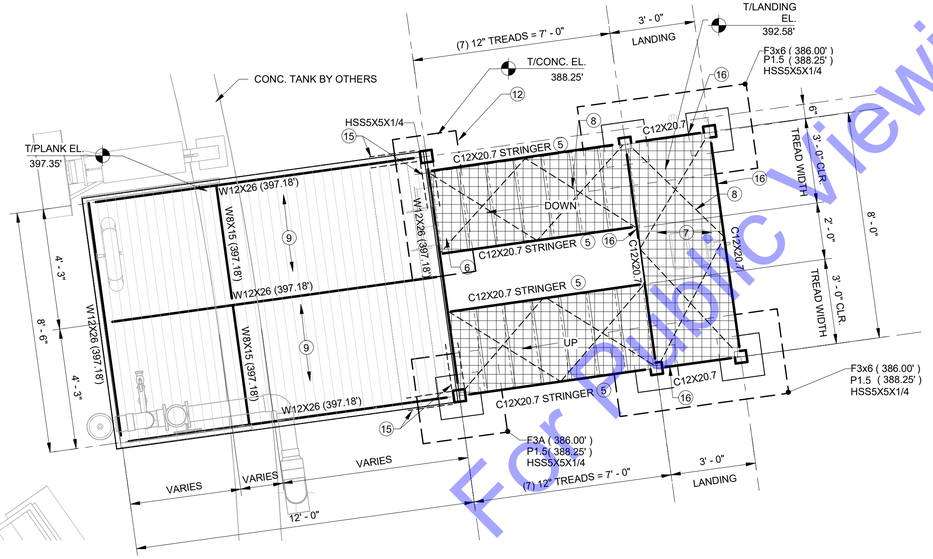

3 S3-2 EAST STAIR FRAMING PLAN (HIGH)
3/8" = 1'-0"

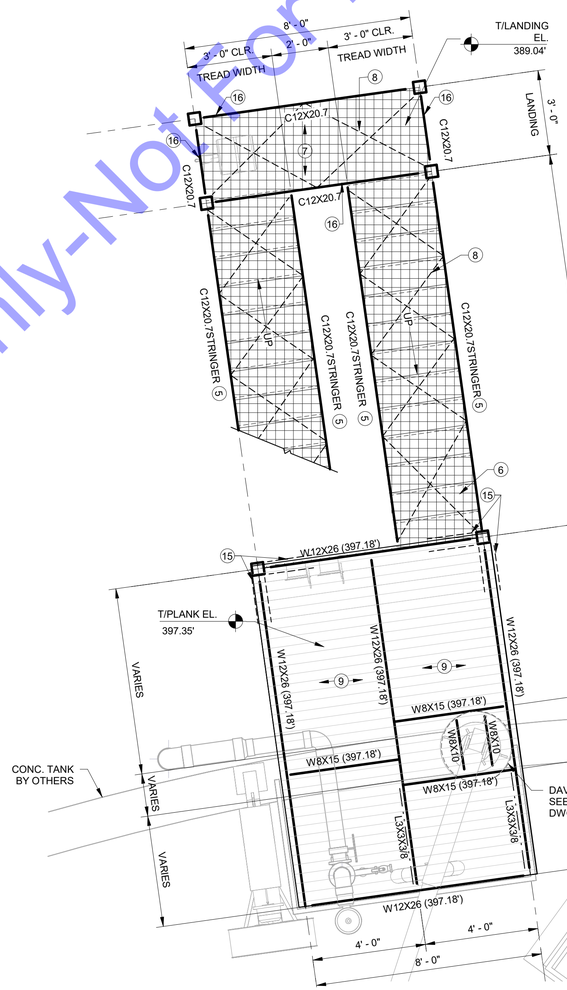

1 S3-2 NORTH STAIR FRAMING PLAN (HIGH)
3/8" = 1'-0"

For Public Viewing Only-Not For Downloading

COMMONWEALTH ENGINEERS, INC.
A network of resources to create a common good.
https://commonwealthengineers.com/

MATTHEW R. MURRAY
REGISTERED
PE11500002
STATE OF INDIANA
PROFESSIONAL ENGINEER
Matt Murray 10/03/2025
Signature Date

CE Solutions
structural engineers
8888 Keystone Crossing, Suite 1300
Indianapolis, IN 46240
ceindianapolis.com

TOWN OF NEWBURGH
WARRICK COUNTY, INDIANA

WASTEWATER TREATMENT
PLANT FLOW EQ BASIN

© 2025 BY COMMONWEALTH ENGINEERS, INC. ALL RIGHTS RESERVED. REPRODUCTION BY ANY METHOD IN WHOLE OR IN PART WITHOUT PERMISSION IS PROHIBITED

Indiana811 Know what's below. 811 before you dig. 1-800-382-5544 (ITS THE LAW)

No.	Submittal / Revision	By	Date

Designed By:	Drawn By:	Checked By:
JTM	JTM	MRM
Issue Date:	Project No:	Scale:
10/03/2025	25-107	As indicated

NEW FLOW EQ TANK - STAIR PLANS

Drawing No:
S3-2
Sheet: 116 OF 161

Saved: 10/2/2025 5:02:39 PM Current Local File: Autodesk Docs://Newburgh New WWTP EQ and Headworks/25-107_S3 EQ TANK_v23.rvt

SPREAD FOOTING SCHEDULE					
MARK	WIDTH	LENGTH	THICK.	BOTT. LONG. REINF.	BOTT. TRANS. REINF.
F3A	3'-0"	3'-0"	1'-0"	3 - #5 T & B	3 - #5 T & B
F3x6	3'-0"	6'-0"	1'-0"	3 - #5 T & B	6 - #5 T & B

PEDESTAL / CONCRETE COLUMN SCHEDULE						
MARK	WIDTH	LENGTH	TYPE	V. REINF.	TIES	REFERENCE
P1.5	1'-6"	1'-6"	B	4 - #8	3 x #3 AT 3" O.C. TOP, #3 AT 12" O.C. REMAINDER	3/S0-4

COLUMN SCHEDULE			
COLUMN SIZE	BASE PLATE	ANCHOR BOLTS	REFERENCE
HSS5x5x1/4	PL 3/4" x 12" x 12"	4 - 3/4" DIA.	9/S0-4

MANDATORY ALTERNANTE (MA-2)
REPLACE ALL GALVANIZED STRUCTURAL STEEL ASSOCIATED WITH THE EXTERIOR STAIRS AND PLATFORM ASSEMBLIES WITH TYPE 316 STAINLESS STEEL. THIS INCLUDES, BUT IS NOT LIMITED TO, STRINGERS, CHANNELS, WIDE-FLANGE BEAMS, PLATES, ANGLES, BOLTS, AND ALL OTHER STRUCTURAL STEEL COMPONENTS THAT ARE PART OF EACH ASSEMBLY. REFER TO DS 29 FOR INFORMATION.

STAIR FRAMING PLAN NOTES

(○) INDICATES NOTE REFERENCED IN PLAN

1. SEE THE S0-SERIES SHEETS FOR GENERAL STRUCTURAL NOTES AND TYPICAL STRUCTURAL DETAILS.
2. ALL DIMENSIONS AND ELEVATIONS SHALL BE VERIFIED PRIOR TO FABRICATION, CONSTRUCTION OR ERECTION. THE GENERAL CONTRACTOR SHALL ASSUME RESPONSIBILITY FOR ANY DISCREPANCIES.
3. SEE SITE PLAN FOR ALL FINAL GRADE ELEVATIONS.
4. ALL STEEL SHALL BE HOT-DIP GALVANIZED.
5. SEE PLAN FOR STEEL STAIR STRINGER MIN. SIZE REQUIREMENTS. STEEL FABRICATOR SHALL DETERMINE REQUIRED STAIR STRINGER PROFILE TO ACCOMMODATE PROVIDED STAIR LENGTH DIMENSIONS AND ELEVATION CHANGE.
6. STAIR TREADS SHALL BE 1-3/4" THICK X 9" WIDE TYPE "F", PUNCHED, HEAVY DUTY ALUMINUM PLANK UNLESS OTHERWISE NOTED. CONTRACTOR SHALL DETERMINE REQUIRED STAIR STRINGER RISE / RUN LAYOUT. SEE TYPICAL STAIR DETAILS AND SPECIFICATIONS FOR ADDITIONAL INFORMATION.
7. STAIR LANDING GRATING SHALL BE 2" HEAVY DUTY, PUCHED ALUMINUM PLANK UNLESS OTHERWISE NOTED. SEE TYPICAL STAIR DETAILS AND SPECIFICATIONS FOR ADDITIONAL INFORMATION.
8. PROVIDE L2X2X1/4 DIAGONAL BRACE AT 5'-0" O.C. MAX ALONG ALL STAIR FLIGHTS AND AT EACH STAIR LANDING; WELD L2X2X1/4 BRACE MEMBERS TO STRINGER BOTTOM CHORDS.
9. FLOOR SHALL BE 2" HEAVY DUTY, UNPUCHED ALUMINUM PLANK.
10. FX (XXX.XX') DENOTES FOOTING MARK, SEE SCHEDULE
11. PX (XXX.XX') DENOTES PEDESTAL MARK, SEE SCH
12. BASE OF STAIR SHALL BEAR ON STAIR LANDING CONCRETE FOUNDATION PER DETAIL 4/S0-9. TOP OF CONCRETE STAIR LANDING SHALL BE 3-IN ABOVE FINAL GRADE. G.C. SHALL CONFIRM LANDING ELEVATION SHOWN ON PLAN WITH GRADING PLAN.
13. THE FOUNDATION DESIGNS SHOWN ARE BASED ON AN ALLOWABLE BEARING PRESSURE OF 4,000 PSF. ALL FOUNDATIONS SHALL BEAR ON SOIL IMPROVED BY THE INSTALLATION OF EITHER CONTROLLED MODULUS COLUMNS (CMC), OR RIGID INCLUSIONS –AT GENERAL CONTRACTOR'S OPTION. SEE SPECIFICATION FOR MORE INFORMATION. COORDINATE SOIL IMPROVEMENT REQUIREMENTS WITH DELEGATED SPECIALTY TANK DESIGN PRIOR TO DESIG. AND INSTALLATION OF THE SOIL IMPROVEMENT SYSTEM
14. WALL SIZE BY SPECIALTY TANK CONTRACTOR
15. PROVIDE KNEE BRACING TO PLATFORM FRAMING PER DETAILS 4/S0-7 AND 5/S0-7
16. PROVIDE LATERAL BRACING TO STAIR LANDING POSTS PER DETAILS 6/S0-7 OR 7/S0-7

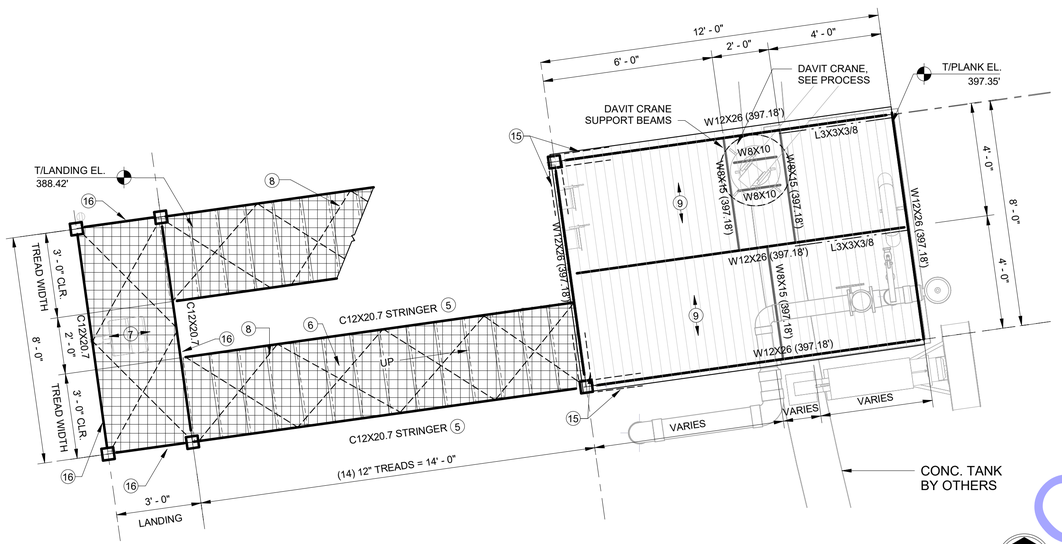

2 S3-3 WEST STAIR FRAMING PLAN (HIGH)
3/8" = 1'-0"

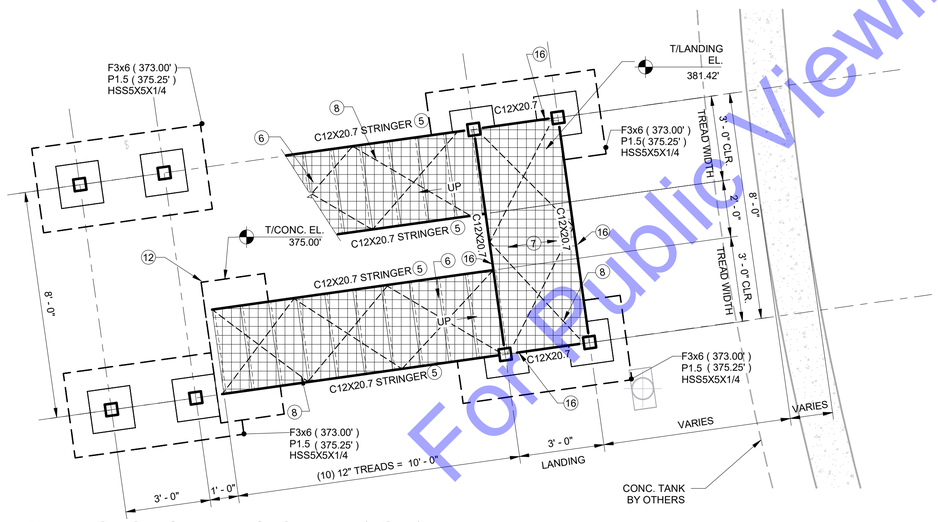

3 S3-3 WEST STAIR FRAMING PLAN (LOW)
3/8" = 1'-0"

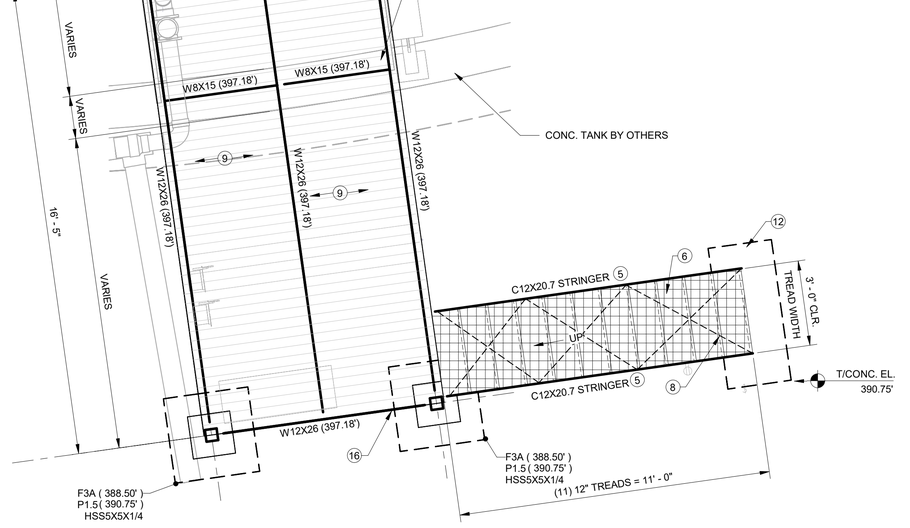

1 S3-3 SOUTH STAIR FRAMING PLAN
3/8" = 1'-0"

For Public Viewing Only-Not For Download

COMMONWEALTH ENGINEERS, INC.
https://commonwealthengineers.com/
MATTHEW R. MURRAY REGISTERED PE11500002 STATE OF INDIANA PROFESSIONAL ENGINEER
10/03/2025
Signature Date
CE Solutions structural engineers
10333 N. Meridian St. Suite 300 Indianapolis, IN 46290 | 317.660.3000 | ceindianapolis.com

TOWN OF NEWBURGH
WARRICK COUNTY, INDIANA

WASTEWATER TREATMENT
PLANT FLOW EQ BASIN

© 2025 BY COMMONWEALTH ENGINEERS, INC. ALL RIGHTS RESERVED. REPRODUCTION BY ANY METHOD IN WHOLE OR IN PART WITHOUT PERMISSION IS PROHIBITED

Indiana811 Know what's below. Call before you dig. 1-800-382-5544 (ITS THE LAW)

No.	Submittal / Revision	By	Date

Designed By:	Drawn By:	Checked By:
JTM	JTM	MRM
Issue Date:	Project No:	Scale:
10/03/2025	25-107	As indicated

NEW FLOW EQ TANK - STAIR PLANS

Drawing No:
S3-3
Sheet: 117 OF 161

Saved: 10/2/2025 5:02:45 PM Current Local File: Autodesk Docs://Newburgh New WWTP EQ and Headworks/25-107_S3 EQ TANK_v23.rvt

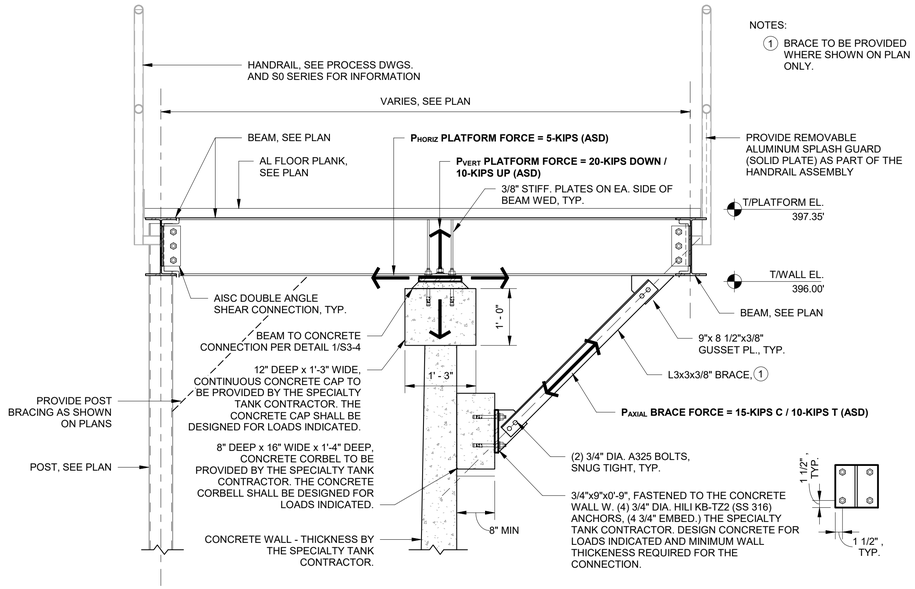

TYPICAL SECTION AT STAIR PLATFORM

2 / S3-4 — 3/4" = 1'-0"

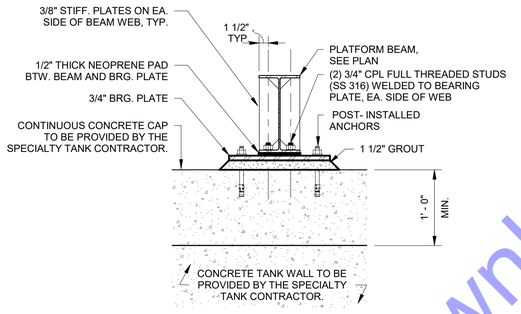

ELEVATION VIEW

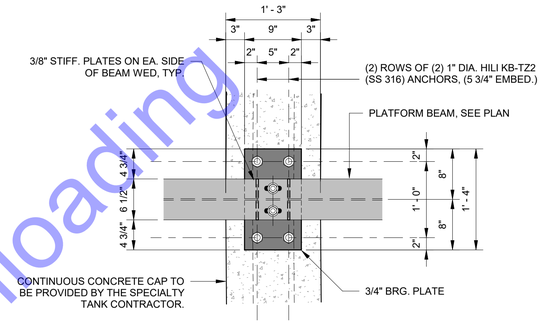

PLAN VIEW

CONNECTION PLATE DETAIL

1 / S3-4 — 1" = 1'-0"

NOTES:
1 G.C. SHALL COORDINATE CRANE BASE AND ATTACHMENT REQUIREMENTS W. SELECTED CRANE SUPPLIER PRIOR TO FABRICATION OF STEEL

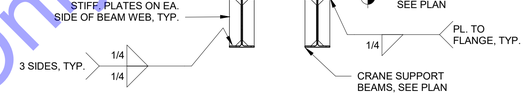

ELEVATION VIEW

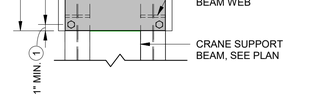

PLAN VIEW

DAVIT CRANE SUPPORT DETAILS

3 / S3-4 — 1" = 1'-0"

For Public Viewing Only- Not For Downloading

COMMONWEALTH ENGINEERS, INC.
https://commonwealthengineers.com/
MATTHEW R. MURRAY REGISTERED PE11500002 STATE OF INDIANA PROFESSIONAL ENGINEER
Signature
10/03/2025
Date
CE Solutions structural engineers
3333 Ridge Pike, Suite 300, Perrysburg, OH 43551
ceSolutionsllc.com

TOWN OF NEWBURGH
WARRICK COUNTY, INDIANA

WASTEWATER TREATMENT
PLANT FLOW EQ BASIN

© 2025 BY COMMONWEALTH ENGINEERS, INC. ALL RIGHTS RESERVED. REPRODUCTION BY ANY METHOD IN WHOLE OR IN PART WITHOUT PERMISSION IS PROHIBITED

Indiana 811 Know what's below. 811 before you dig. 1-800-382-5544 (ITS THE LAW)

No.	Submittal / Revision	By	Date

Designed By:	Drawn By:	Checked By:
JDT	JAB	MRM
Issue Date:	Project No:	Scale:
10/03/2025	25-107	As indicated

NEW FLOW EQ TANK - SECTIONS AND DETAILS

Drawing No: **S3-4**

Sheet: 118 OF 161

Saved: 10/2/2025 5:02:45 PM Current Local File: Autodesk Docs://Newburgh New WWTP EQ and Headworks/25-107_S3 EQ TANK_v23.rvt

MANDATORY ALTERNANTE (MA-2)
REPLACE ALL GALVANIZED STRUCTURAL STEEL ASSOCIATED WITH THE NEW PLATFORM ASSEMBLY WITH TYPE 316 STAINLESS STEEL. THIS INCLUDES, BUT IS NOT LIMITED TO, STRINGERS, CHANNELS, WIDE-FLANGE BEAMS, PLATES, ANGLES, BOLTS, AND ALL OTHER STRUCTURAL STEEL COMPONENTS THAT ARE PART OF EACH ASSEMBLY. REFER TO DS 29 FOR INFORMATION.

UPPER LEVEL PLAN NOTES

◯ INDICATES NOTE REFERENCED IN PLAN

1. SEE THE S0-SERIES SHEETS FOR GENERAL STRUCTURAL NOTES AND TYPICAL STRUCTURAL DETAILS.
2. ALL DIMENSIONS AND ELEVATIONS SHALL BE VERIFIED PRIOR TO FABRICATION, CONSTRUCTION OR ERECTION. THE GENERAL CONTRACTOR SHALL ASSUME RESPONSIBILITY FOR ANY DISCREPANCIES.
3. SEE SITE PLAN FOR ALL FINAL GRADE ELEVATIONS.
4. ALL STEEL SHALL BE HOT-DIP GALVANIZED.
5. 2" THICK MOLDED FIBER REINFORCED PLATFORM GRATING EXTENTS. SEE SPECIFICATIONS FOR ADDITIONAL INFORMATION.
6. NEW N.P.W PUMP, SEE PROCESS DRAWINGS. ATTACH PUMP TO STRUCTURAL SUPPORTS PER MANUFACTURER'S RECOMMENDATIONS. GENERAL CONTRACTOR SHALL BE RESPONSIBLE FOR COORDINATING THE FINAL LOCATION, SIZE, AND ATTACHMENT REQUIREMENTS WITH THE SELECTED PUMP MANUFACTURER PRIOR TO FABRICATION AND ERECTION OF THE STEEL FRAMING.
7. THE CONTRACTOR SHALL FIELD VERIFY TEH EXISTING CONSTRUCTION ALONG THE PERINETER OF THE PLATFORM (EXISTING HANDRAILS, EDGE ANGLES, DIMENSIONS, ETC.) PRIOR TO FABRICATION OF STEEL. NOTIFY THE STRUCTURAL ENGINEER IF ANY CHANGES ARE REQUIRED TO ACCOMODATE THE NEW WALKWAY BETWEEN THE EXISTING AND THE NEW PLATFORMS.

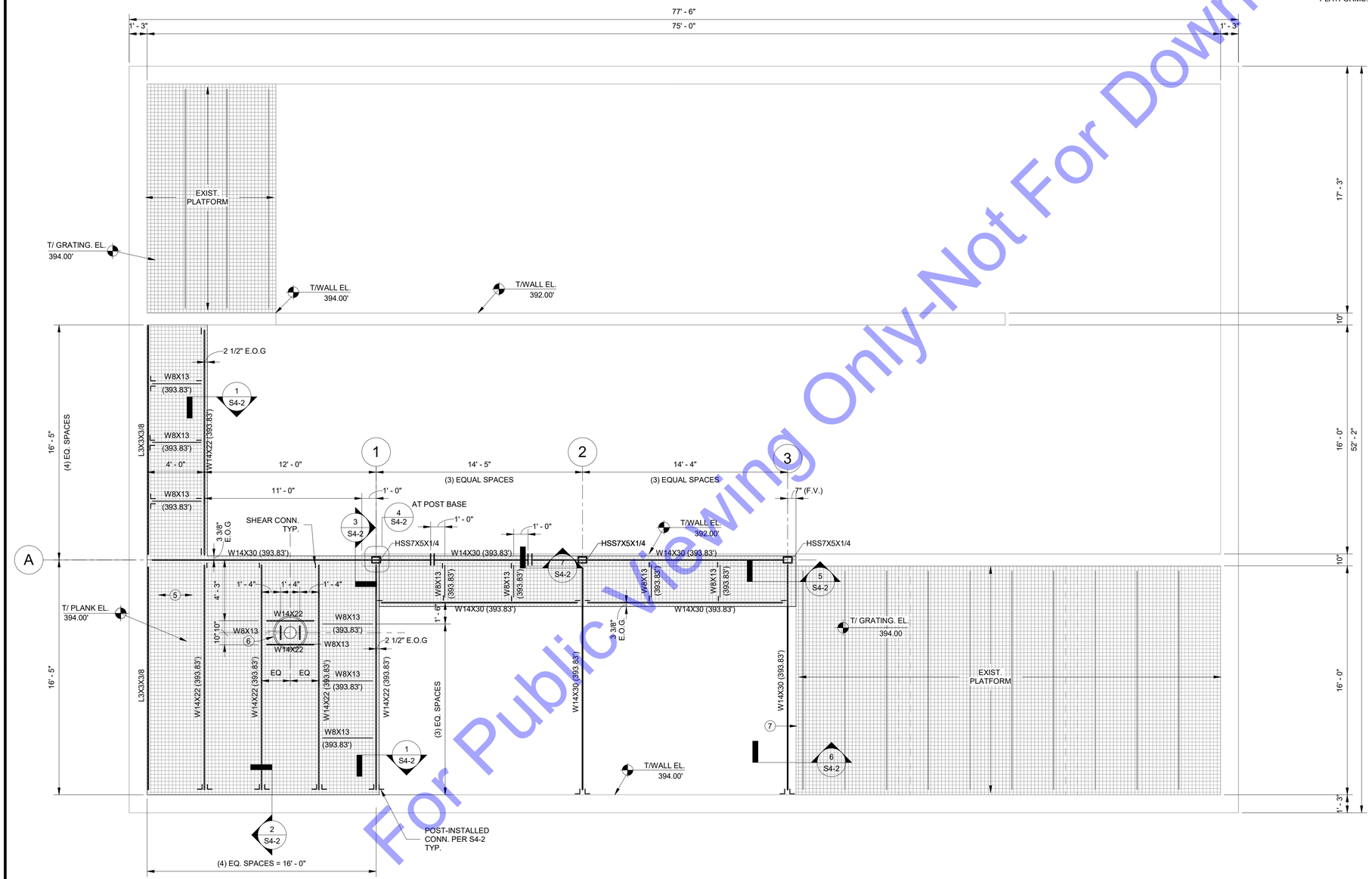

1 S4-1 NON-POTABLE WATER PUMP – WALKWAY FRAMING PLAN
1/4" = 1'-0"

For Public Viewing Only-Not For Downloading

COMMONWEALTH ENGINEERS, INC.
https://commonwealthengineers.com/
MATTHEW R. MURRAY REGISTERED PE11500002 STATE OF INDIANA PROFESSIONAL ENGINEER
Signature 10/03/2025 Date
CE Solutions structural engineers
3333 Vision Drive, Suite 300 Fishers, IN 46038 (317) 863-1333 ceisolutionsllc.com

TOWN OF NEWBURGH
WARRICK COUNTY, INDIANA

WASTEWATER TREATMENT PLANT FLOW EQ BASIN

© 2025 BY COMMONWEALTH ENGINEERS, INC. ALL RIGHTS RESERVED. REPRODUCTION BY ANY METHOD IN WHOLE OR IN PART WITHOUT PERMISSION IS PROHIBITED

Indiana811 Know what's below. Call before you dig. 1-800-382-5544 (ITS THE LAW)

No.	Submittal / Revision	By	Date

Designed By:	Drawn By:	Checked By:
JAB	JAB	MRM
Issue Date:	Project No:	Scale:
10/03/2025	25-107	As indicated

NON-POTABLE WATER PUMP – WALKWAY FRAMING PLAN

Drawing No:
S4-1
Sheet: 119 OF 161

Saved: 10/2/2025 5:13:28 PM Current Local File: Autodesk Docs://Newburgh New WWTP EQ and Headworks/25-107_S4 TANK MODS_v23.rvt

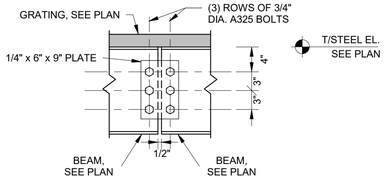

7 S4-2 SECTION
1" = 1'-0"

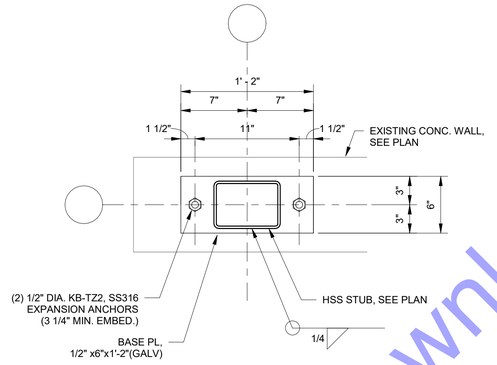

4 S4-2 STUB BASE PL. DETAIL
1 1/2" = 1'-0"

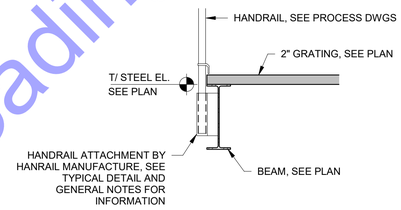

1 S4-2 SECTION
3/4" = 1'-0"

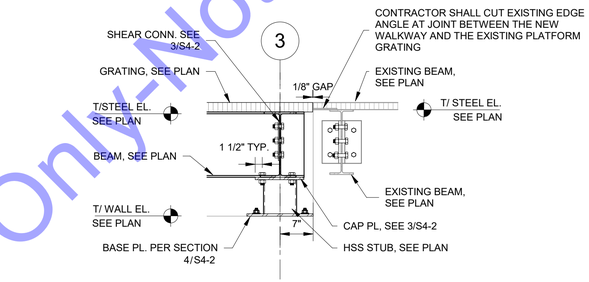

5 S4-2 SECTION
3/4" = 1'-0"

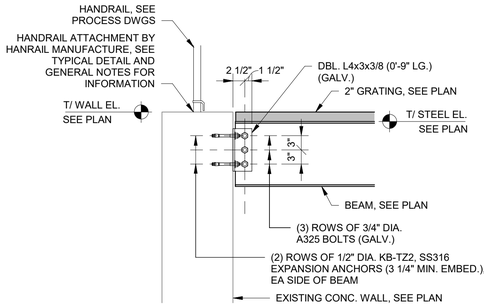

2 S4-2 SECTION
3/4" = 1'-0"

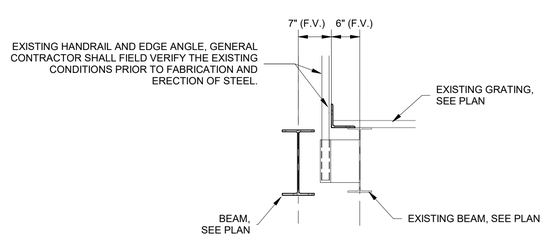

6 S4-2 SECTION
3/4" = 1'-0"

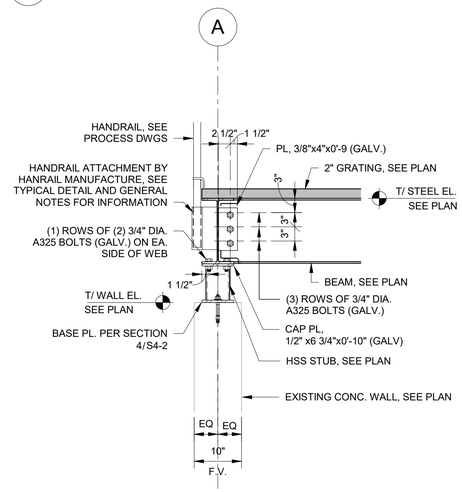

3 S4-2 SECTION
3/4" = 1'-0"

For Public Viewing Only-Not For Downloading

COMMONWEALTH ENGINEERS, INC.
A network of resources to create a better place
https://commonwealthengineers.com/

MATTHEW R. MURRAY
REGISTERED
PE11500002
STATE OF INDIANA
PROFESSIONAL ENGINEER
Signature
Date

CE Solutions
structural engineers
3500 Depauw Blvd, Suite 3080
Indianapolis, IN 46268
ceindianapolis.com

TOWN OF NEWBURGH
WARRICK COUNTY, INDIANA

WASTEWATER TREATMENT PLANT FLOW EQ BASIN

© 2025 BY COMMONWEALTH ENGINEERS, INC. ALL RIGHTS RESERVED. REPRODUCTION BY ANY METHOD IN WHOLE OR IN PART WITHOUT PERMISSION IS PROHIBITED

Indiana811 Know what's below. Call before you dig. 1-800-382-5544 (ITS THE LAW)

No.	Submittal / Revision	By	Date

Designed By:	Drawn By:	Checked By:
JAB	JAB	MRM
Issue Date:	Project No:	Scale:
10/03/2025	25-107	As indicated

NON-POTABLE WATER PUMP - SECTIONS AND DETAILS

Drawing No:
S4-2
Sheet: 120 OF 161

Saved: 10/2/2025 5:13:29 PM Current Local File: Autodesk Docs://Newburgh New WWTP EQ and Headworks/25-107_S4 TANK MODS_v23.rvt

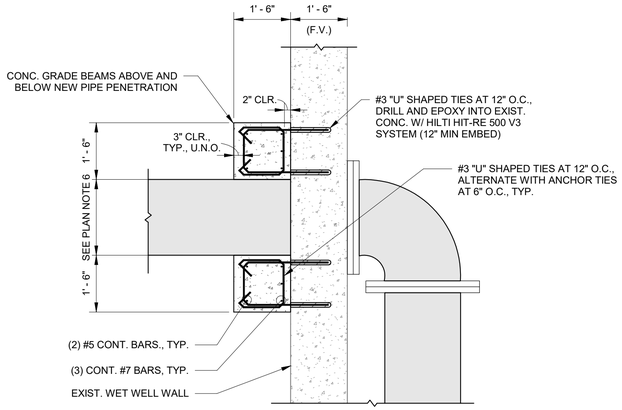

3 S5-1 GRADE BEAM REINFORCEMENT DETAIL

1/2" = 1'-0"

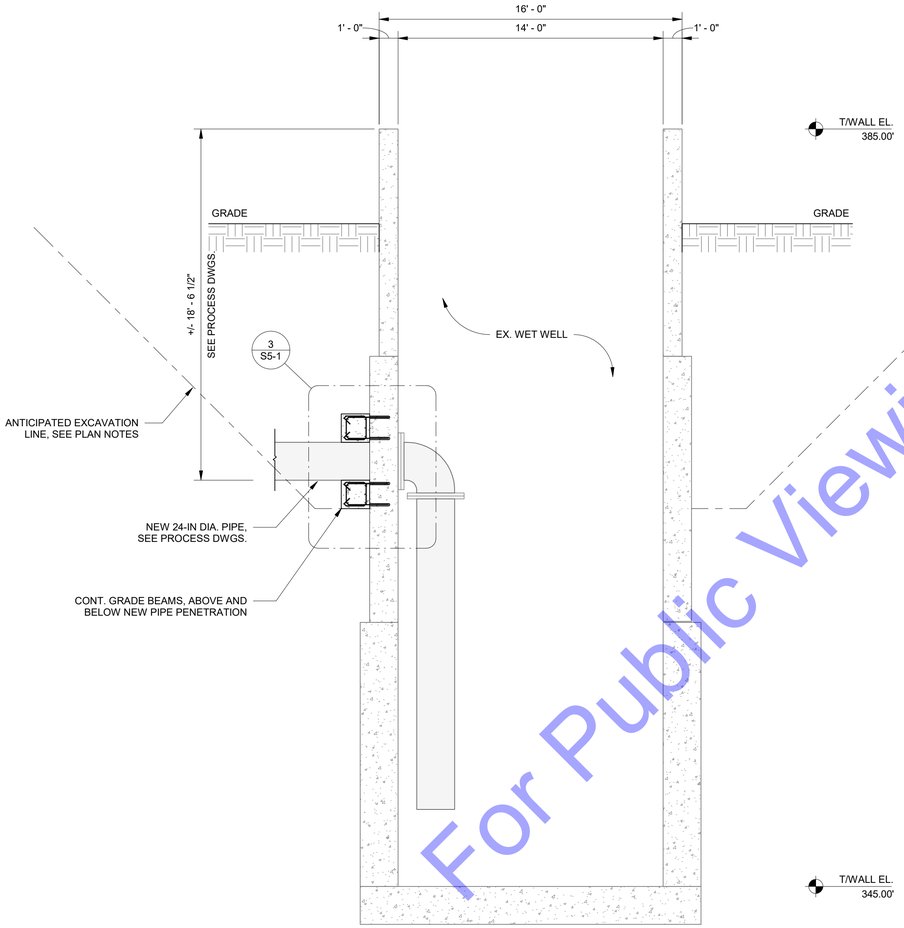

2 S5-1 SECTION

1/4" = 1'-0"

PLAN NOTES

(○) INDICATES NOTE REFERENCED IN PLAN

1. SEE THE S0-SERIES SHEETS FOR GENERAL STRUCTURAL NOTES AND TYPICAL STRUCTURAL DETAILS.
2. SEE SITE PLAN FOR ALL FINAL GRADE ELEVATIONS.
3. SEE GEOTECHNICAL REPORT FOR EXISTING SOIL INFORMATION.
4. GENERAL CONTRACTOR TO COORDINATE ALL NEW OPENINGS, PIPE SLEEVES, ETC. WITH THE PROCESS DRAWINGS.
5. ALL DIMENSIONS AND ELEVATIONS SHALL BE VERIFIED PRIOR TO FABRICATION, CONSTRUCTION OR ERECTION. THE GENERAL CONTRACTOR SHALL ASSUME RESPONSIBILITY FOR ANY DISCREPANCIES.
6. NEW 24-IN DIA. PIPE PENETRATION, SEE PROCESS DWGS FOR LOCATION, ELEVATION, AND SEAL REQUIREMENTS. PRIOR TO CORE DRILLING THE CONCRETE THE CONTRACTOR SHALL SCAN THE EXISTING WET WELL WALL TO LOCATE THE REINFORCEMENT. EXERCISE CAUTION WHEN CORE DRILLING THE CONCRETE TO MINIMIZE THE DISTURBANCE OF THE EXISTING REINFORCEMENT. SHOULD ANY EXISTING REINFORCEMENT BAR CLEARANCE BE AFFECTED AND REINFORCEMENT BECOME EXPOSED, THE CONTRACTOR SHALL COAT THE EXPOSE BAR WITH A CORROSION INHIBITOR PRIOR TO INSTALLATION OF THE PIPE THROUGH THE CORED OPENING.
7. EXCAVATION FOR THE NEW GRADE BEAM WILL EXTEND UNDERNEATH THE EXISTING VALVE VAULT. THE GENERAL CONTRACTOR SHALL BE RESPONSIBLE FOR INSTALLING TEMPORARY SHORING TO SUPPORT THE EXISTING STRUCTURES DURING THE INSTALLATION OF THE NEW GRADE BEAM AND THE NEW PIPE PENETRATION AND FLOW METER (SEE PROCESS DRAWINGS). THE TEMPORARY SHORING CONTRACTOR SHALL PREPARE DETAILED WORKING OR SHOP DRAWINGS TO ENABLE FABRICATION, ERECTION AND CONSTRUCTION OF ALL PARTS OF THE WORK INCLUDING CALCULATIONS TO THE STRUCTURAL ENGINEER FOR REVIEW PRIOR TO FABRICATION. THESE SHOP DRAWINGS SHALL SHOW THE DESIGN LOADS, PLANS, ELEVATION, SECTIONS, CONNECTIONS, REQUIRED BRACING AND DETAILS NECESSARY FOR THE TEMPORARY SHORING ENGINEER TO FABRICATE, ERECT AND CONSTRUCT OF ALL PARTS OF THE WORK. THESE SHOP DRAWINGS AND CALCULATIONS WILL BE REVIEWED FOR DESIGN CONCEPTS ONLY. THE TEMPORARY SHORING CONTRACTOR SHALL BE RESPONSIBLE FOR ALL DIMENSIONS, ACCURACY AND FIT OF WORK. THE TEMPORARY SHORING SYSTEM SHALL BE DESIGNED BY, AND THE SHOP DRAWINGS AND CALCULATIONS SHALL BEAR THE SEAL AND SIGNATURE OF, A REGISTERED PROFESSIONAL ENGINEER IN THE STATE OF INDIANA.
8. EXCAVATION SHALL TAKE PLACE ON OPPOSING SIDES OF THE EXISTING LIFT STATION TO AVOID OVERTURNING OR SLIDING OF THE STRUCTURE. ALTERNATIVELY, THE CONTRACTOR SHALL PROVIDE WALL BRACING. THE DESIGN OF THE TEMPORARY BRACING SHALL BE INCLUDED WITH THE SUBMITTAL FOR THE ABOVE LINE ITEM.
9. DEWATERING OF THE EXCAVATED AREA IS THE RESPONSIBILITY OF THE GENERAL CONTRACTOR. REFER TO THE GEOTECHNICAL REPORT FOR ADDITIONAL DEWATERING REQUIREMENTS.
10. REMOVABLE FLOWABLE FILL SHALL BE USED TO BACKFILL THE EXCAVATION BENEATH THE EXISTING VALVE VAULT. THE FILL SHALL EXTEND UP TO THE BOTTOM OF THE EXISTING VALVE VAULT SLAB. THE GENERAL CONTRACTOR SHALL BE RESPONSIBLE FOR ENSURING THAT SLAB BEARING IS FULLY RESTORED UPON COMPLETION OF THE WORK. ABOVE THE FLOWABLE FILL, BACKFILL MATERIAL SHALL BE FREE DRAINING GRANULAR MATERIAL.

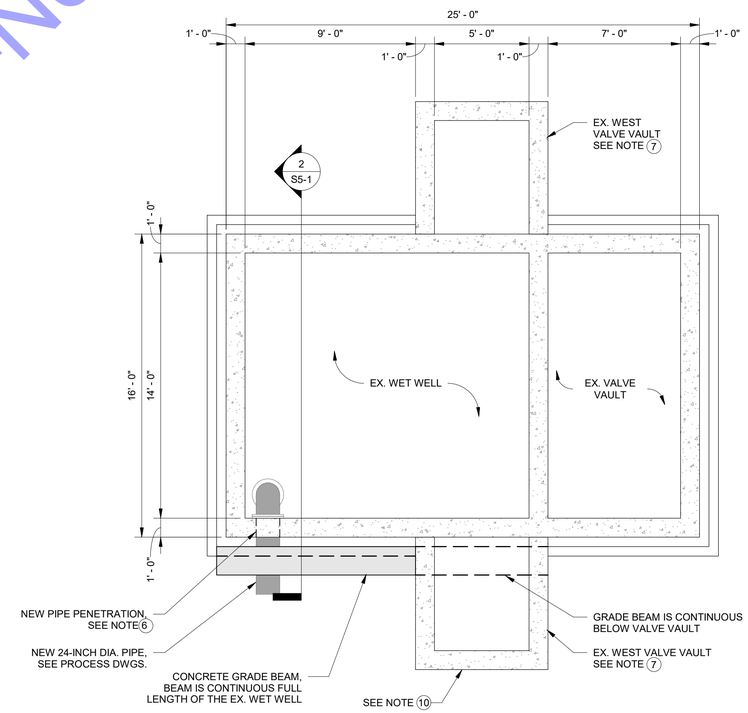

1 S5-1 EXISTING LS #3 MODIFICATIONS - STRUCTURAL PLAN

1/4" = 1'-0"

For Public Viewing Only-Not For Download

COMMONWEALTH ENGINEERS, INC.
A network of resources to create a common goal.
https://commonwealthengineers.com/

MATTHEW R. MURRAY
REGISTERED
PE11500002
STATE OF INDIANA
PROFESSIONAL ENGINEER
Matt Murray 10/03/2025
Signature Date

CE Solutions
structural engineers
317.844.5656 | 200
Fishers, IN 46038
ceisolutionsllc.com

TOWN OF NEWBURGH
WARRICK COUNTY, INDIANA

WASTEWATER TREATMENT
PLANT FLOW EQ BASIN

© 2025 BY COMMONWEALTH ENGINEERS, INC. ALL RIGHTS RESERVED. REPRODUCTION BY ANY METHOD IN WHOLE OR IN PART WITHOUT PERMISSION IS PROHIBITED

Indiana 811 Know what's below. Call before you dig. 1-800-382-5544 (ITS THE LAW)

No.	Submittal / Revision	By	Date

Designed By:	Drawn By:	Checked By:
JAB	RMS	MRM
Issue Date:	Project No:	Scale:
10/03/2025	25-107	As indicated

EX. LIFT STATION NO. 3 STRUCTURAL MODIFICATION PLAN, SECTION AND DETAILS

Drawing No:
S5-1
Sheet: 121 OF 161

Saved: 10/2/2025 5:15:44 PM Current Local File: Autodesk Docs://Newburgh New WWTP EQ and Headworks/25-107_S5 LIFT STATION MODS_v23.rvt

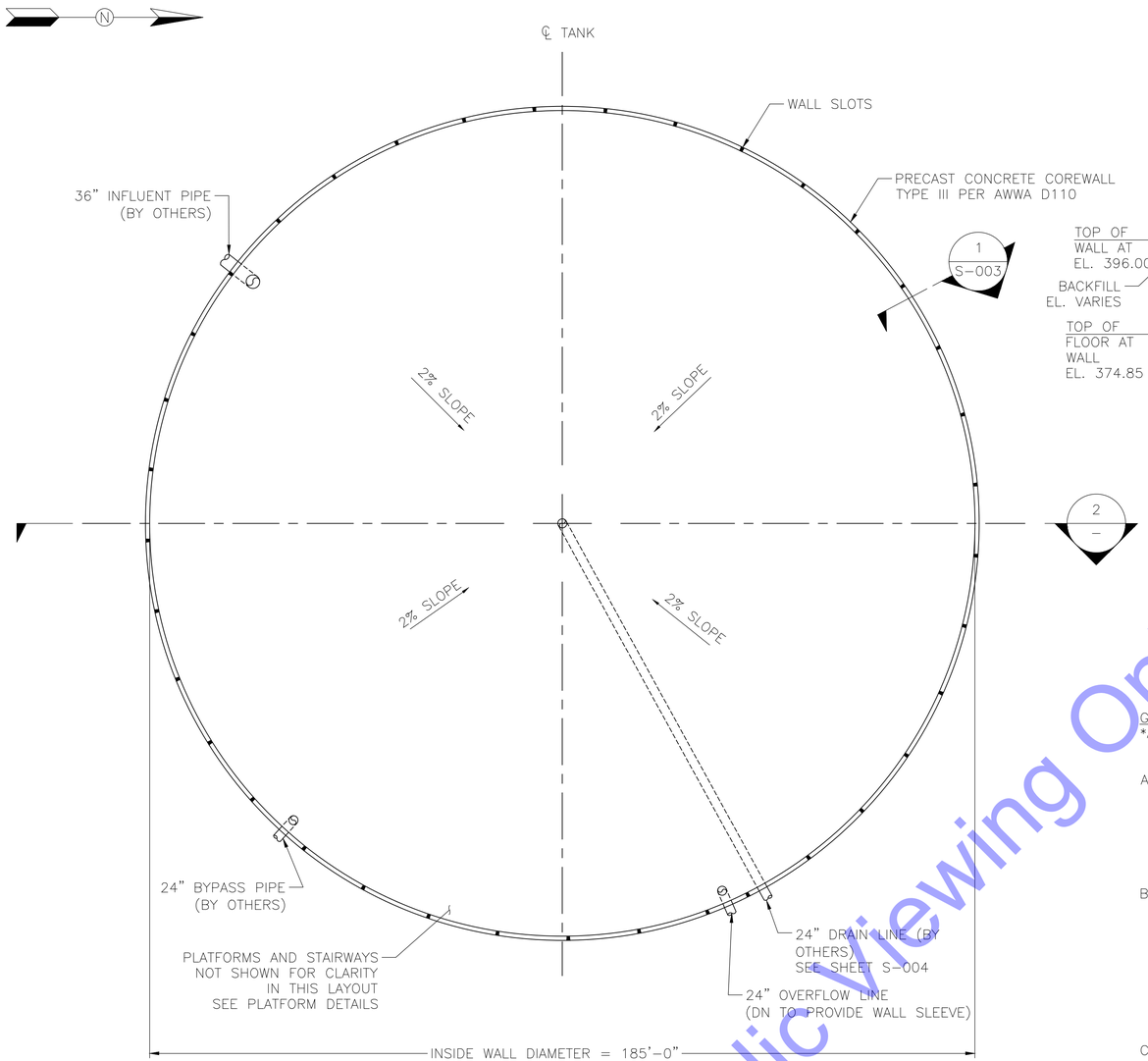

FLOOR PLAN 1

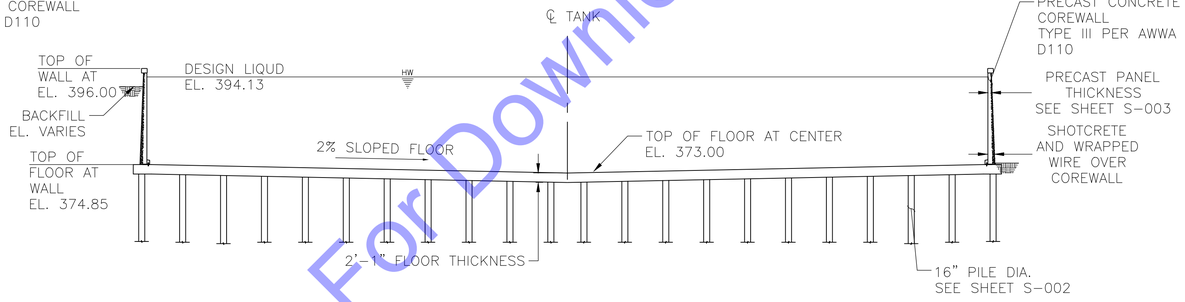

TANK SECTION 2

GENERAL NOTES:
*ALL DIMENSIONS SHOWN ARE MINIMUM REQUIREMENTS. TANK CONTRACTOR, AS DEFINED IN THE SPECIFICATIONS, TO VERIFY DIMENSIONS WITH STRUCTURAL CALCULATIONS.

A. DESIGN LOADS
1. LIQUID (WATER) : 62.4PCF
2. Ri, IMPULSIVE STRUCTURAL RESPONSE COEFFICIENT : 3.25 (ASCE 7 WITH CABLES) 1.50 (ASCE 7 W/O CABLES) 3.50 (AWWA WITH CABLES) 1.50 (AWWA W/O CABLES)
3. Rc, CONVECTIVE STRUCTURAL RESPONSE COEFFICIENT : 1.0
4. ANALYSIS PROCEDURE USED : EQUIVALENT LATERAL FORCE ANALYSIS BASED ON AWWA D110 AND ACI 350.3

B. CONCRETE AND SHOTCRETE
1. FLOOR, AND FOOTINGS : 4500 PSI
2. PRECAST WALL : 4500 PSI
3. SHOTCRETE FOR WIRE COVER (1C:3S) AND COVER COAT (1C:4S) : 4500 PSI
4. SEE TECHNICAL SPECIFICATION FOR COMPLETE MIX DESIGN INFORMATION INCLUDING MINIMUM CEMENT CONTENT, MAXIMUM WATER-CEMENT RATIO, AGGREGATE SIZE AND ACCEPTABLE ADMIXTURES.
5. CRYSTALLINE WATERPROOFING ADMIXTURE SHALL BE USED IN TANK FLOOR, PRECAST CONCRETE COREWALL AND WALL CAP CONCRETE. DOSAGE AS REQUIRED PER MANUFACTURER.
6. SEE TECHNICAL SPECIFICATION FOR CONCRETE PLACING AND FORMING PROCEDURES.

C. METALS
1. ALL STAINLESS STEEL (SST) TO BE 304L UNLESS OTHERWISE NOTED.

D. REINFORCING STEEL
1. ALL REINFORCING IN TANK SHALL CONFORM TO ASTM A615 GRADE 60 UNLESS OTHERWISE NOTED ON THESE DRAWINGS.
2. REINFORCING STEEL CALLED OUT AS GALVANIZED SHALL HAVE A CLASS 1 COATING IN ACCORDANCE WITH ASTM A767, WITHOUT CHROMATE.

E. EARTHWORK REQUIREMENTS
1. MINIMUM COMPACTION OF CRUSHED ROCK AND SUBGRADE UNDER AND AROUND PIPE BLOCKS AND UNDER FLOOR AND FOOTINGS SHALL EQUAL 95% RELATIVE COMPACTION AS DETERMINED IN ACCORDANCE WITH ASTM D1557.
2. COMPACTION OF BACKFILL AROUND TANK SHALL EQUAL 90% RELATIVE COMPACTION AS DETERMINED IN ACCORDANCE WITH ASTM D1557. USE ONLY HAND HELD COMPACTION EQUIPMENT WITHIN 5' OF TANK WALL AND LIGHTWEIGHT EQUIPMENT (15,600 LBS MAX) BEYOND THE 5' AND WITHIN 15' OF THE TANK SO AS NOT TO DAMAGE THE WALL. BRING UP THE BACKFILL AROUND THE TANK IN UNIFORM LIFTS WHEN POSSIBLE. DIFFERENCE IN BACKFILL HEIGHTS DURING INSTALLATION SHALL NEVER EXCEED THE FINAL DIFFERENCE IN BACKFILL HEIGHT.

F. CONSTRUCTION RESPONSIBILITY
1. FOR REFERENCE ONLY – TANK TO BE CONSTRUCTED BY DN, WORK BY OTHERS TO BE RESPONSIBILITY OF GENERAL CONTRACTOR.

For Public Viewing Only-Not For Downloading

BUILT FOR THE FUTURE

DN TANKS
11 Teal Rd.
Wakefield, MA
01880

4.00 MG EQUALIZING TANK

NEWBURGH, IN

REV	DATE	DESCRIPTION
DWN:J.DELCORE	CHK:AMINOGUE	DATE: 9/30/2025

ANDREW R. MINOGUE
REGISTERED
PE11700163
STATE OF INDIANA
PROFESSIONAL ENGINEER
9/30/25

TANK PLAN AND SECTION

DRAWING NUMBER
TS-001

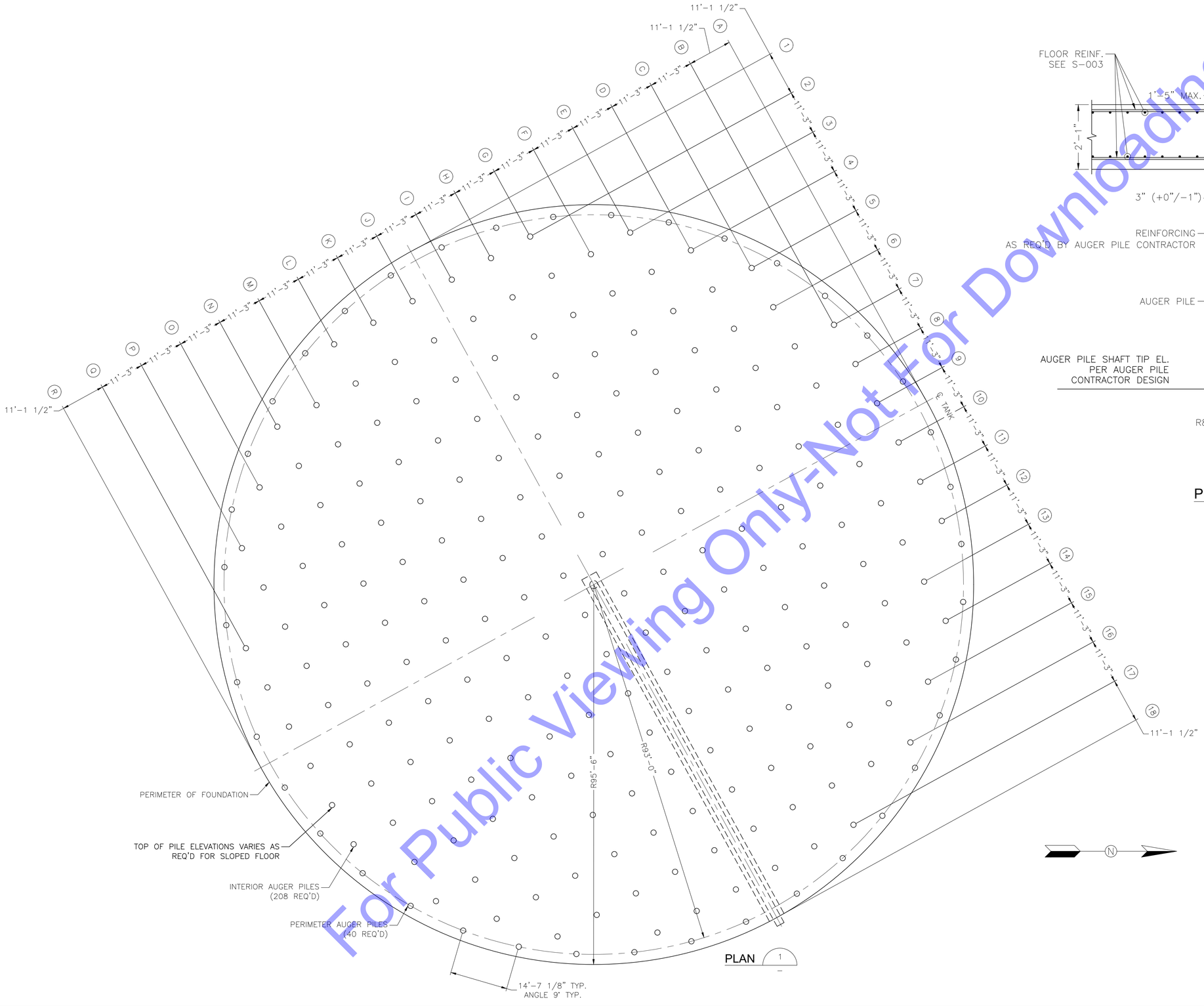

PLAN 1

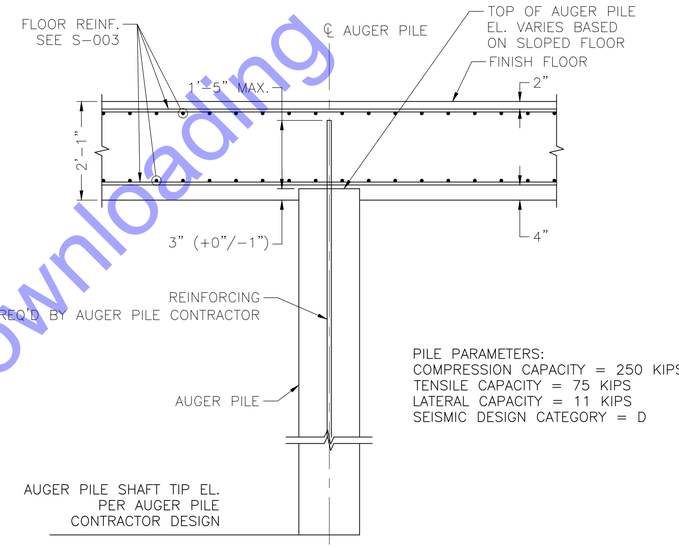

PILE PARAMETERS:
COMPRESSION CAPACITY = 250 KIPS
TENSILE CAPACITY = 75 KIPS
LATERAL CAPACITY = 11 KIPS
SEISMIC DESIGN CATEGORY = D

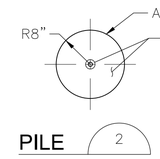

PILE 2

For Public Viewing Only-Not For Downloading

BUILT FOR THE FUTURE

DN TANKS

11 Teal Rd.
Wakefield, MA
01880

4.00 MG EQUALIZING TANK

NEWBURGH, IN

DWN:J.DELCORE	CHK:AMINOGUE	DATE: 9/30/2025
REV	DESIGNER	DESCRIPTION
DATE		

ANDREW R. MINOGUE
REGISTERED
PE11700163
STATE OF INDIANA
PROFESSIONAL ENGINEER

9/30/25

FOUNDATION PLAN & PILE LAYOUT

DRAWING NUMBER
TS-002

NOTES:
1) FOOTING AND FLOOR TO BE FINISHED PER SPECIFICATIONS.
2) MAINTAIN CLEARANCE BETWEEN THE INDIVIDUAL STRANDS IN THE BASE RESTRAINT CABLE SETS (DO NOT BUNDLE). CABLES MAY TOUCH WITHIN 2' OF THE BOOT.
3) BASE RESTRAINT CABLES MAY BE BENT PRIOR TO INSTALLATION.
4) BASE RESTRAINT CABLE DESIGN REQUIREMENTS TO BE DETERMINED BY TANK CONTRACTOR.

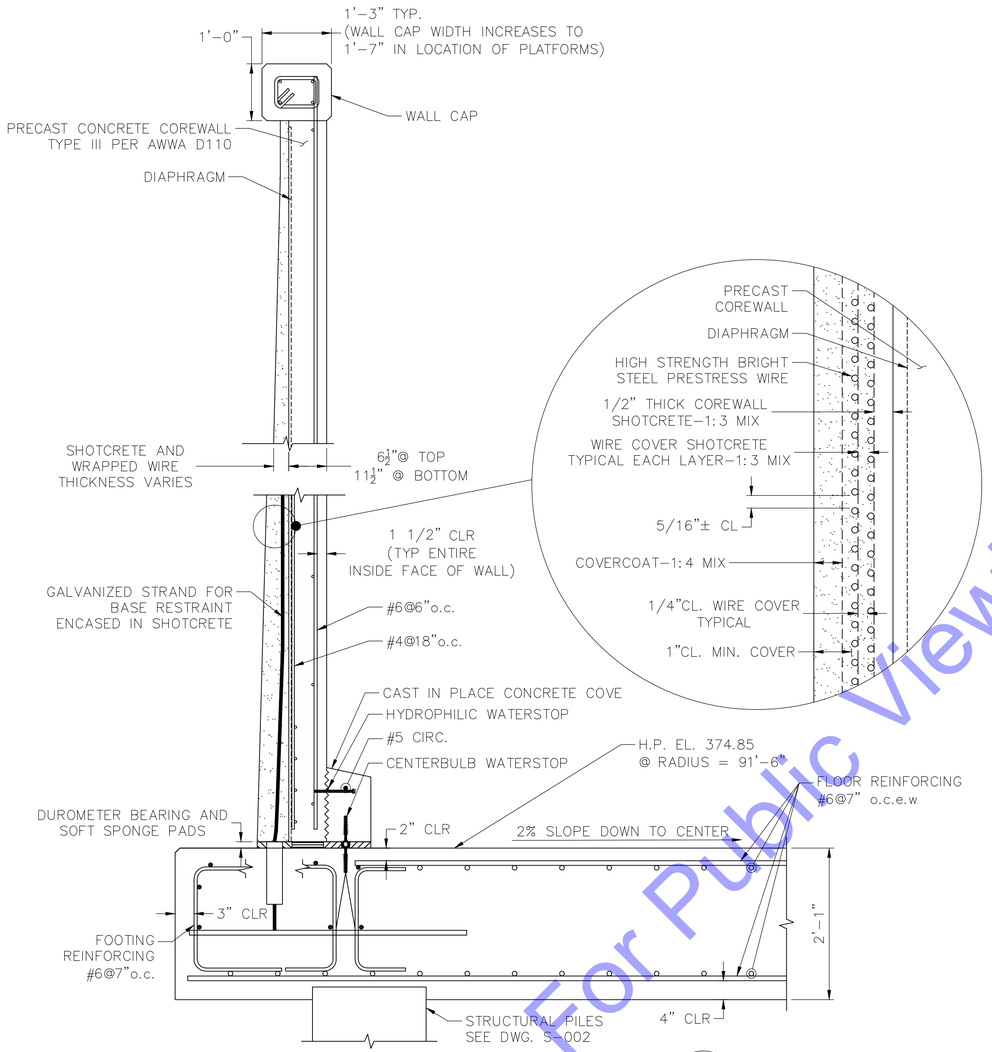

STRUCTURAL SLAB, WALL AND ROOF SECTION 1 S-001

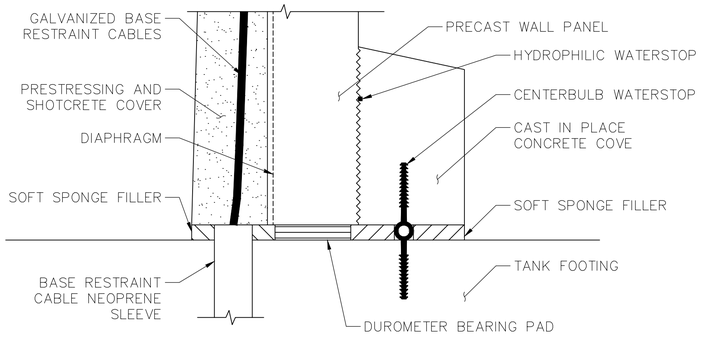

WALL BASE 3 –

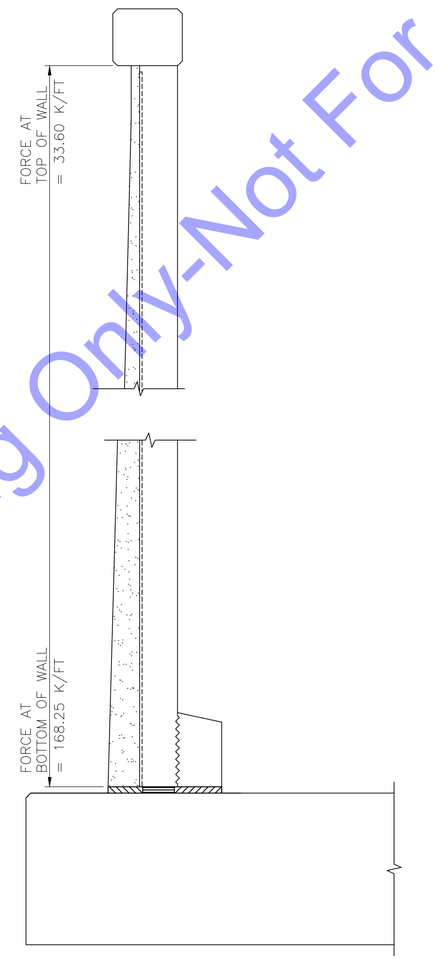

FINAL PRESTRESS FORCE 2 –

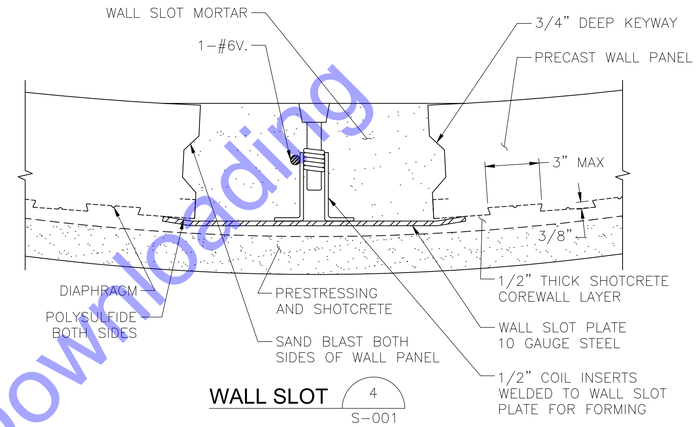

WALL SLOT 4 S-001

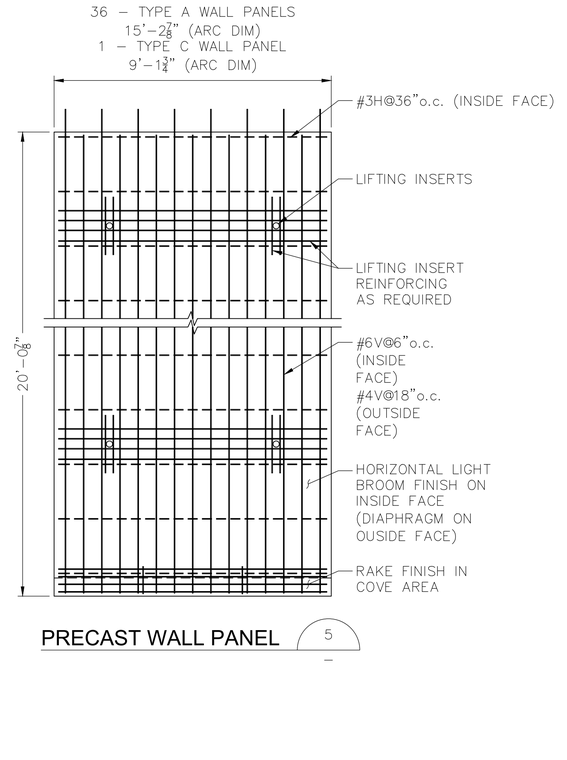

PRECAST WALL PANEL 5 –

For Public Viewing Only-Not For Downloading

BUILT FOR THE FUTURE
DN TANKS
11 Teal Rd.
Wakefield, MA
01880

4.00 MG EQUALIZING TANK
NEWBURGH, IN

REV	DATE	DESCRIPTION

DWN:J.DELCORE CHK:AMINOGUE DESIGNER DATE: 9/30/2025

ANDREW R. MINOGUE REGISTERED PE11700163 STATE OF INDIANA PROFESSIONAL ENGINEER 9/30/25

WALL AND FOOTING

DRAWING NUMBER
TS-003

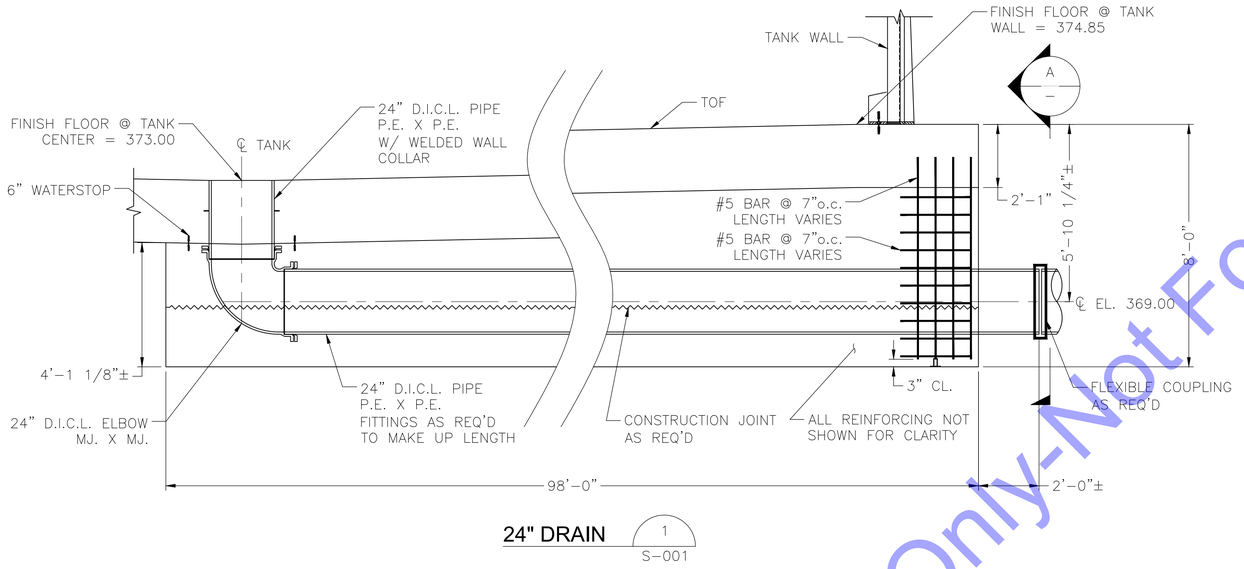

24" DRAIN (1 / S-001)

PIPE

1. THE HORIZONTAL PIPING SHALL BE BRACED AND SUPPORTED TO PREVENT VERTICAL AND LATERAL MOVEMENT DURING CASTING. UTILIZE CONSTRUCTION JOINT WITH 1/4" AMPLITUDES IF REQUIRED.
2. EXTERIOR PIPING CONNECTIONS TO BE DESIGNED BY OTHERS TO TOLERATE ANTICIPATED TANK SETTLEMENT.
3. MAINTAIN REQUIRED CLEAR COVER ON REINFORCING IN SLOPED AREA.

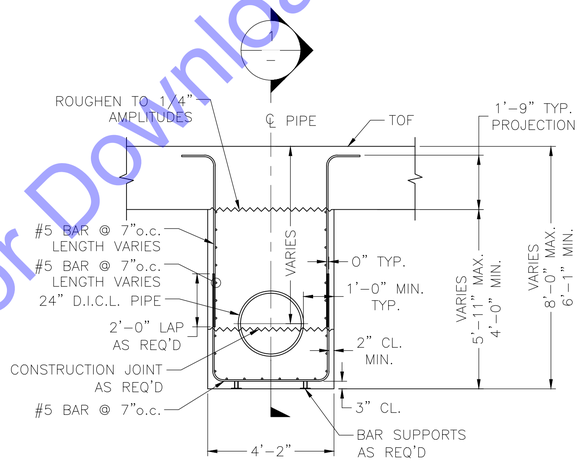

SECTION (A / –)

NOTES:

1) PADS WILL BE REQUIRED FOR THE 36" INFLUENT, 24" BYPASS, AND 24" OVERFLOW PIPE. QUANTITY, SIZE, LOCATION AND THICKNESS TO BE CONFIRMED WITH DESIGN LOADING AND CONNECTION DETAILS.
2) PADS MAY BE REQUIRED FOR THE PLATFORM AND STAIRWAYS. QUANTITY, SIZE, LOCATION AND THICKNESS TO BE CONFIRMED WITH THE DESIGN LOADING AND CONNECTION DETAILS, PER THE STRUCTURAL DRAWINGS AND SPECIFICATIONS.

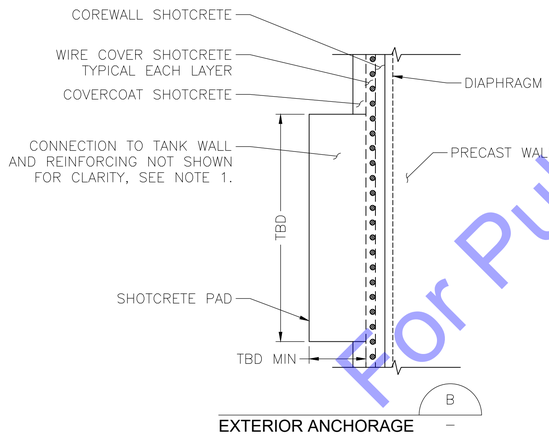

EXTERIOR ANCHORAGE (B / –)

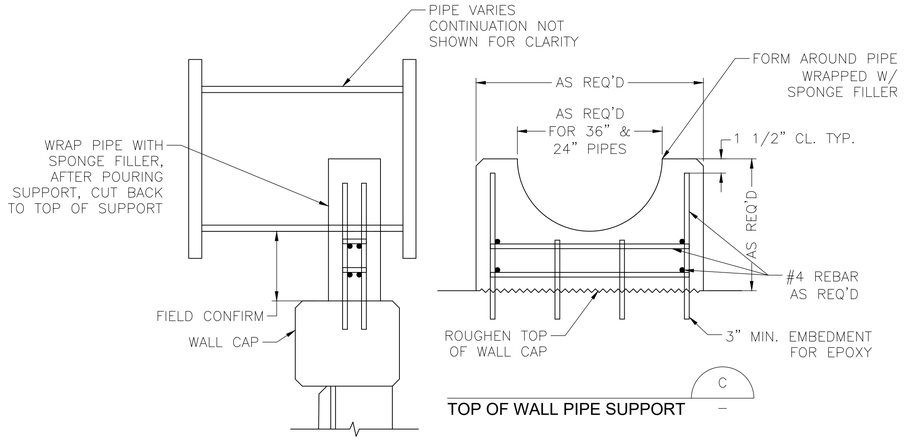

TOP OF WALL PIPE SUPPORT (C / –)

For Public Viewing Only-Not For Downloading

BUILT FOR THE FUTURE

DN TANKS

11 Teal Rd.
Wakefield, MA
01880

4.00 MG EQUALIZING TANK

NEWBURGH, IN

DWN:J.DELCORE	CHK:AMINOGUE	DATE: 9/30/2025
REV	DESIGNER	DESCRIPTION
DATE		

ANDREW R. MINOGUE
REGISTERED
PE11700163
STATE OF INDIANA
PROFESSIONAL ENGINEER
9/30/25

TANK DRAIN, PIPE SUPPORTS, AND PADS

DRAWING NUMBER
TS-004

LIFE SAFETY LEGEND:

NOTE: SEE ELECTRICAL FOR ADDITIONAL LIGHTING AND FIXTURE INFORMATION (TYP)

EGRESS PATH OF TRAVEL: ----→

FIRE EXTINGUISHER. COORDINATE QUANTITY AND LOCATION(S) WITH LOCAL AUTHORITY HAVING JURISDICTION: ● F.E.

EXIT SIGN WITH EMERGENCY LIGHTING, TIED TO BATTERY BACKUP:

EXIT SIGN WITH EMERGENCY LIGHTING AND DIRECTIONAL ARROW, TIED TO BATTERY BACKUP:

WALL-MOUNTED, EMERGENCY LIGHT FIXTURE ABOVE EXIT DOOR, TIED TO BATTERY BACKUP:

WALL-MOUNTED, EMERGENCY LIGHT FIXTURE, TIED TO BATTERY BACKUP:

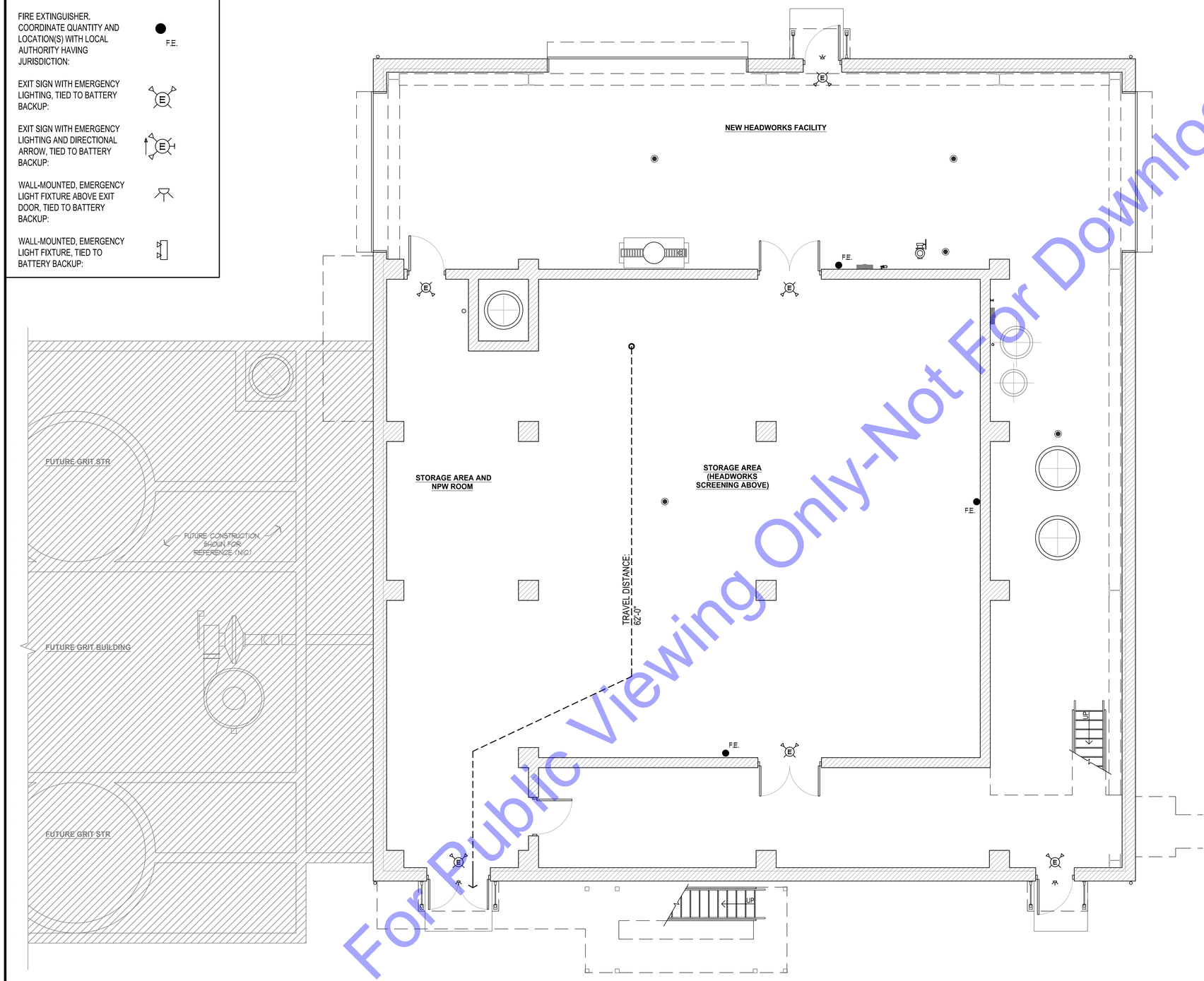

1 1ST FLOOR LIFE SAFETY PLAN

SCALE: 3/16" = 1'-0"

For Public Viewing Only-Not For Download

GENERAL REQUIREMENTS

ALL WORK IS TO BE DONE IN ACCORDANCE WITH ALL GOVERNING CODES AND REGULATING AGENCIES. THIS PROJECT IS DESIGNED AND DOCUMENTED PER THE ARCHITECT'S INTERPRETATION OF THE CODE REQUIREMENTS. VARIOUS GOVERNING AGENCIES SOMETIMES INTERPRET THE CODES, LAWS AND ORDINANCES DIFFERENTLY. THESE AGENCIES HAVE JURISDICTION TO REQUIRE CHANGES IN DESIGN AND CONSTRUCTION INCLUDING THOSE AGENCIES INVOLVED WITH THE "AMERICAN'S WITH DISABILITIES ACT"

GENERAL CONTRACTOR AND EACH SUBCONTRACTOR SHALL SCRUTINIZE ALL DRAWING SHEETS TO DETERMINE THE FULL EXTENT OF THE RESPONSIBILITIES FOR EACH TRADE.

GENERAL CONTRACTOR AND EACH SUBCONTRACTOR SHALL BECOME FAMILIAR WITH THE PROJECT AND BRING ANY DISCREPANCIES BETWEEN DRAWINGS AND FIELD CONDITIONS TO THE IMMEDIATE ATTENTION OF THE ARCHITECT.

CONTACT RESPECTIVE UTILITY COMPANIES FOR EXACT LOCATION OF APPLICABLE UTILITIES AND TAKE NECESSARY PRECAUTIONS TO PROTECT UTILITIES BELOW GROUND AND ABOVE GROUND AND TO NOT INTERRUPT SERVICE TO NEIGHBORS.

THE CONTRACTOR SHALL MAKE ADVANCE ARRANGEMENTS WITH THE PROPERTY OWNER FOR ANY WORK WHICH WILL AFFECT THE OPERATIONS OF NEARBY NEIGHBORS.

THE CONTRACTOR SHALL MAKE ADVANCE ARRANGEMENTS WITH THE PROPERTY OWNER FOR ANY WORK NOT DURING NORMAL BUSINESS HOURS AND SHALL BE RESPONSIBLE FOR SECURING THE PREMISES AT ALL TIMES.

ALL DIMENSIONS ARE NOMINAL UNLESS OTHERWISE NOTED AND SHALL BE FROM FACE OF STUD TO FACE OF STUD OR FACE OF MASONRY TO FACE OF MASONRY FOR NEW CONSTRUCTION AND FACE OF FINISH FOR EXISTING CONSTRUCTION. DO NOT SCALE DRAWINGS, CONTACT ARCHITECT FOR DISPUTED DIMENSIONS.

ALL MATERIALS STORED WITHIN THE BUILDING SHALL BE NEATLY STACKED AND SHALL NOT INTERFERE WITH OPERATION OF THE FACILITY OR NEARBY NEIGHBORS. DO NOT STORE COMBUSTIBLE MATERIALS ON THE PREMISES FOR A PERIOD LONGER THAN NECESSARY FOR EXECUTION.

REMOVE AND LEGALLY DISPOSE OFF-SITE ALL DEBRIS RESULTING FROM THE DEMOLITION AND EXECUTION OF THE WORK.

THE GENERAL CONTRACTOR SHALL BE RESPONSIBLE FOR OBTAINING ALL PERMITS UNLESS OTHERWISE SPECIFIED.

THESE DRAWINGS INDICATE THE GENERAL SCOPE OF THE PROJECT IN TERMS OF ARCHITECTURAL DESIGN CONCEPT, THE DIMENSIONS OF THE BUILDING, THE MAJOR ARCHITECTURAL ELEMENTS, AND THE TYPE OF STRUCTURAL SYSTEM. THE DRAWINGS DO NOT NECESSARILY INDICATE OR DESCRIBE ALL WORK REQUIRED FOR FULL PERFORMANCE AND COMPLETION OF THE REQUIREMENTS OF THE CONTRACT. THE TRADE CONTRACTORS SHALL PERFORM SUCH SERVICES, AND FURNISH ALL ITEMS REQUIRED FOR THE PROPER EXECUTION OF THE PROJECT.

CODE SUMMARY

ALL WORK UNDER THIS CONTRACT SHALL COMPLY WITH THE PROVISIONS OF THE SPECIFICATIONS4 DRAWINGS AND SHALL SATISFY ALL APPLICABLE CODES, ORDINANCES, A.D.A, AND REGULATIONS OF ALL GOVERNING BODIES INVOLVED. ANY MODIFICATIONS TO THE CONTRACT WORK REQUIRED BY SUCH AUTHORITIES SHALL BE AT THE EXPENSE OF THE OWNER, SUBJECT TO THE RECEIPT OF AN AFFIDAVIT OR LETTER FROM THE GOVERNING BODY AND OWNER'S PRIOR APPROVAL OF ANY ADDITIONAL COST TO BE INCURRED. ALL PERMITS AND LICENSES NECESSARY FOR FOR THE PROPER EXECUTION OF THE WORK SHALL BE SECURED AND PAID FOR BY THE CONTRACTOR INVOLVED. APPLICABLE CODES INCLUDE, BUT ARE NOT LIMITED TO THE FOLLOWING:

BUILDING CODE:	2014 INDIANA BUILDING CODE 2012 INTERNATIONAL BUILDING CODE 675 IAC 13 - 2.6
FIRE CODE:	2014 INDIANA FIRE CODE 2012 INTERNATIONAL FIRE CODE 675 IAC 22 - 2.5
PLUMBING CODE:	2012 INDIANA PLUMBING CODE 2006 INTERNATIONAL PLUMBING CODE 675 IAC 16 - 1.4
ELECTRICAL CODE:	2009 INDIANA ELECTRICAL CODE 2008 NFPA 70 675 IAC 17 - 1.8
MECHANICAL CODE:	2014 INDIANA MECHANICAL CODE 2012 INTERNATIONAL MECHANICAL CODE 675 IAC 18 - 1.6
ENERGY CODE:	2010 INDIANA ENERGY CONSERVATION CODE ASHRAE 90.1 2007 675 IAC 19 - 3
OCCUPANCY CLASSIFICATION:	F-2 / S-2
INCIDENTAL USE AREAS (TABLE 509):	N/A
REQUIRED SEPARATION OF OCCUPANCIES (TABLE 508.4):	N/A
TYPE OF CONSTRUCTION:	III-B
GENERAL BUILDING HEIGHTS AND AREAS	
ALLOWABLE HEIGHT/AREA (TABLE 503):	3-STORIES / 18,000 SF
AREA MODIFICATIONS (SECT. 506):	N/A
ACTUAL HEIGHT/AREA:	2-STORIES / 9,832 SF
FIRE-RESISTANCE-RATED CONSTRUCTION	
RATING FOR BUILDING ELEMENTS (TABLE 601):	NONE
RATING FOR EXTERIOR WALLS (TABLE 602):	NONE
EXTERIOR WALL OPENINGS (TABLE 705.8):	N/A
INTERIOR FINISHES	
INTERIOR WALL AND CEILING REQUIREMENTS (TABLE 803.9):	CLASS C
FIRE PROTECTION SYSTEMS	
AUTOMATIC SPRINKLER SYSTEM:	NO
MEANS OF EGRESS	
MAX. FLOOR AREA PER OCCUPANT (TABLE 1004.1.2):	9,832 SF / 300 OCC (STORAGE / MECH.) = 33 OCC'S
EGRESS WIDTH PER OCCUPANT (TABLE 1005.3.2):	.2 INCHES x 33 OCC. = 6.6 INCH
MIN. NO. OF EXITS FOR OCCUPANT LOAD (TABLE 1021):	2 EXITS
MAX. TRAVEL DISTANCE (1016.2):	300'

GENERAL NOTES

AREA BETWEEN ATTIC DRAFT STOPS SHALL NOT EXCEED 3,000 SQ.FT AND THE GREATEST HORIZONTAL DISTANCE SHALL NOT EXCEED 60'

COMMONWEALTH ENGINEERS, INC.
A wealth of resources to master a common goal.
https://commonwealthengineers.com/
OFFICE LOCATIONS IN:
INDIANAPOLIS, IN. (2)
EVANSVILLE, IN.
FORT WAYNE, IN.
CROWN POINT, IN.
BOWLING GREEN, KY.
SOUTH BEND, IN.

DARREN L PETERSON
REGISTERED
No. AR19500143
STATE OF INDIANA
ARCHITECT

Signature 10/03/2025 Date

peterson ARCHITECTURE
298 south 10th street
suite 500
noblesville in 46060
p 317.770.9714
f 317.770.9718
studio@petersonarchitecture.com

TOWN OF NEWBURGH
WARRICK COUNTY, INDIANA

WASTEWATER TREATMENT
PLANT FLOW EQ BASIN

© 2023 BY COMMONWEALTH ENGINEERS, INC. ALL RIGHTS RESERVED. REPRODUCTION BY ANY METHOD IN WHOLE OR IN PART WITHOUT PERMISSION IS PROHIBITED

Indiana811 Know what's below. 811 before you dig. 1-800-382-5544 (ITS THE LAW)

No.	Submittal Revision	By	Date

Designed By:	Drawn By:	Checked By:
---	JRH	DLP
Issue Date: 10/03/25	Project No: 25-0010	Scale: AS SHOWN

NEW HEADWORKS BUILDING - 1ST FLOOR LIFE SAFETY PLAN & CODE ANALYSIS

Drawing No: **A0-1**

Sheet: 126 OF 161

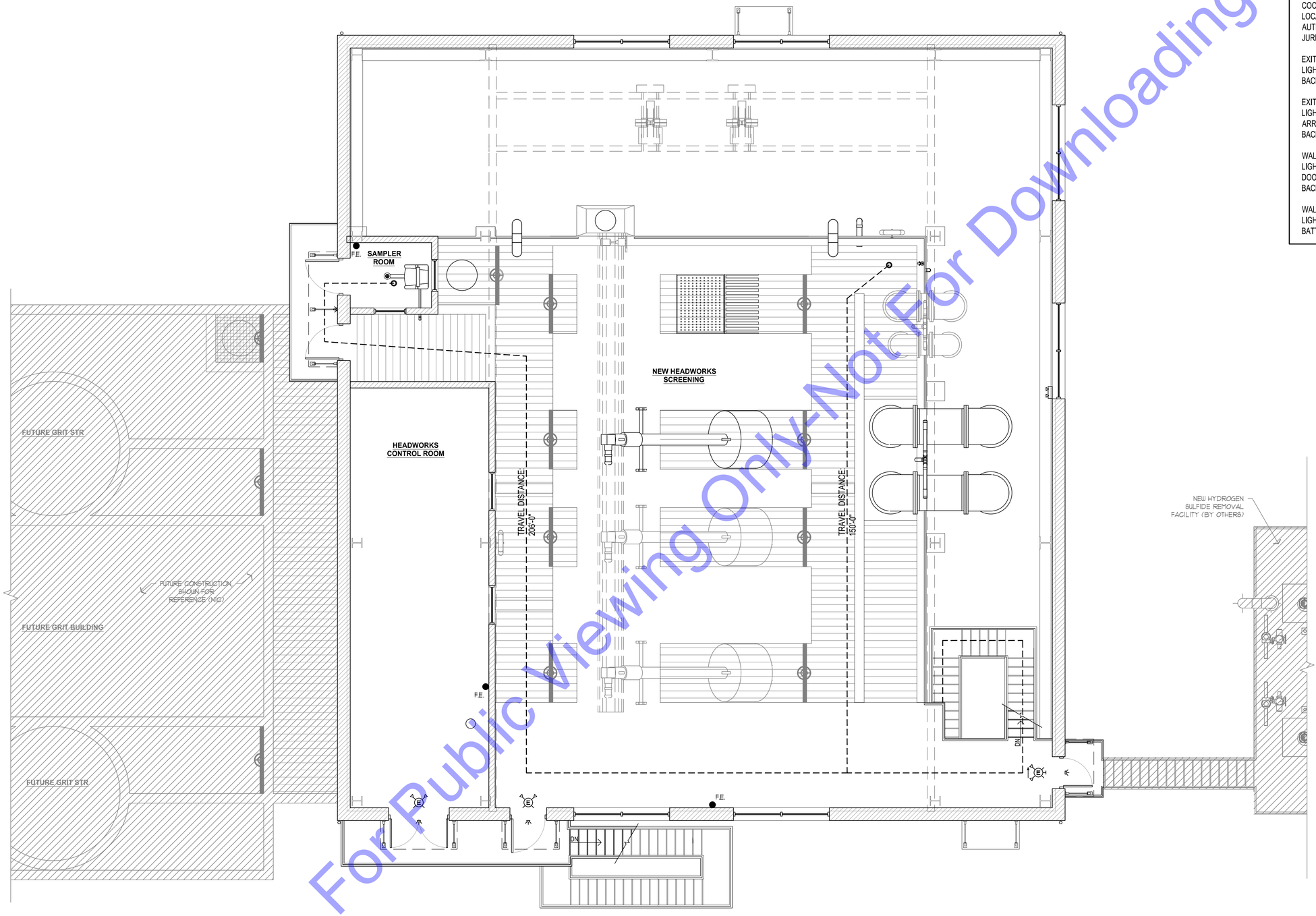

For Public Viewing Only-Not For Downloading

LIFE SAFETY LEGEND:

NOTE: SEE ELECTRICAL FOR ADDITIONAL LIGHTING AND FIXTURE INFORMATION (TYP)

EGRESS PATH OF TRAVEL:	
FIRE EXTINGUISHER. COORDINATE QUANTITY AND LOCATION(S) WITH LOCAL AUTHORITY HAVING JURISDICTION:	F.E.
EXIT SIGN WITH EMERGENCY LIGHTING, TIED TO BATTERY BACKUP:	E
EXIT SIGN WITH EMERGENCY LIGHTING AND DIRECTIONAL ARROW, TIED TO BATTERY BACKUP:	E
WALL-MOUNTED, EMERGENCY LIGHT FIXTURE ABOVE EXIT DOOR, TIED TO BATTERY BACKUP:	
WALL-MOUNTED, EMERGENCY LIGHT FIXTURE, TIED TO BATTERY BACKUP:	

1 2ND FLOOR LIFE SAFETY PLAN

SCALE: 3/16" = 1'-0"

COMMONWEALTH ENGINEERS, INC.
A wealth of resources to master a common goal.
https://commonwealthengineers.com/
OFFICE LOCATIONS IN:
INDIANAPOLIS, IN. (2)
EVANSVILLE, IN.
FORT WAYNE, IN.
CROWN POINT, IN.
BOWLING GREEN, KY.
SOUTH BEND, IN.

DARREN L PETERSON
REGISTERED
No. AR19500143
STATE OF INDIANA
ARCHITECT

Signature

10/03/2025
Date

peterson ARCHITECTURE
298 south 10th street
suite 500
noblesville in 46060
p 317.770.9714
f 317.770.9718
studio@petersonarchitecture.com

TOWN OF NEWBURGH
WARRICK COUNTY, INDIANA

WASTEWATER TREATMENT
PLANT FLOW EQ BASIN

© 2023 BY COMMONWEALTH ENGINEERS, INC. ALL RIGHTS RESERVED. REPRODUCTION BY ANY METHOD IN WHOLE OR IN PART WITHOUT PERMISSION IS PROHIBITED

Indiana 811
Know what's below. 811 before you dig.
1-800-382-5544
(ITS THE LAW)

No.	Submittal / Revision	By	Date

Designed By:	Drawn By:	Checked By:
---	JRH	DLP
Issue Date: 10/03/25	Project No: 25-0010	Scale: AS SHOWN

NEW HEADWORKS BUILDING - 2ND FLOOR LIFE SAFETY PLAN

Drawing No:
A0-2
Sheet: 127 OF 161

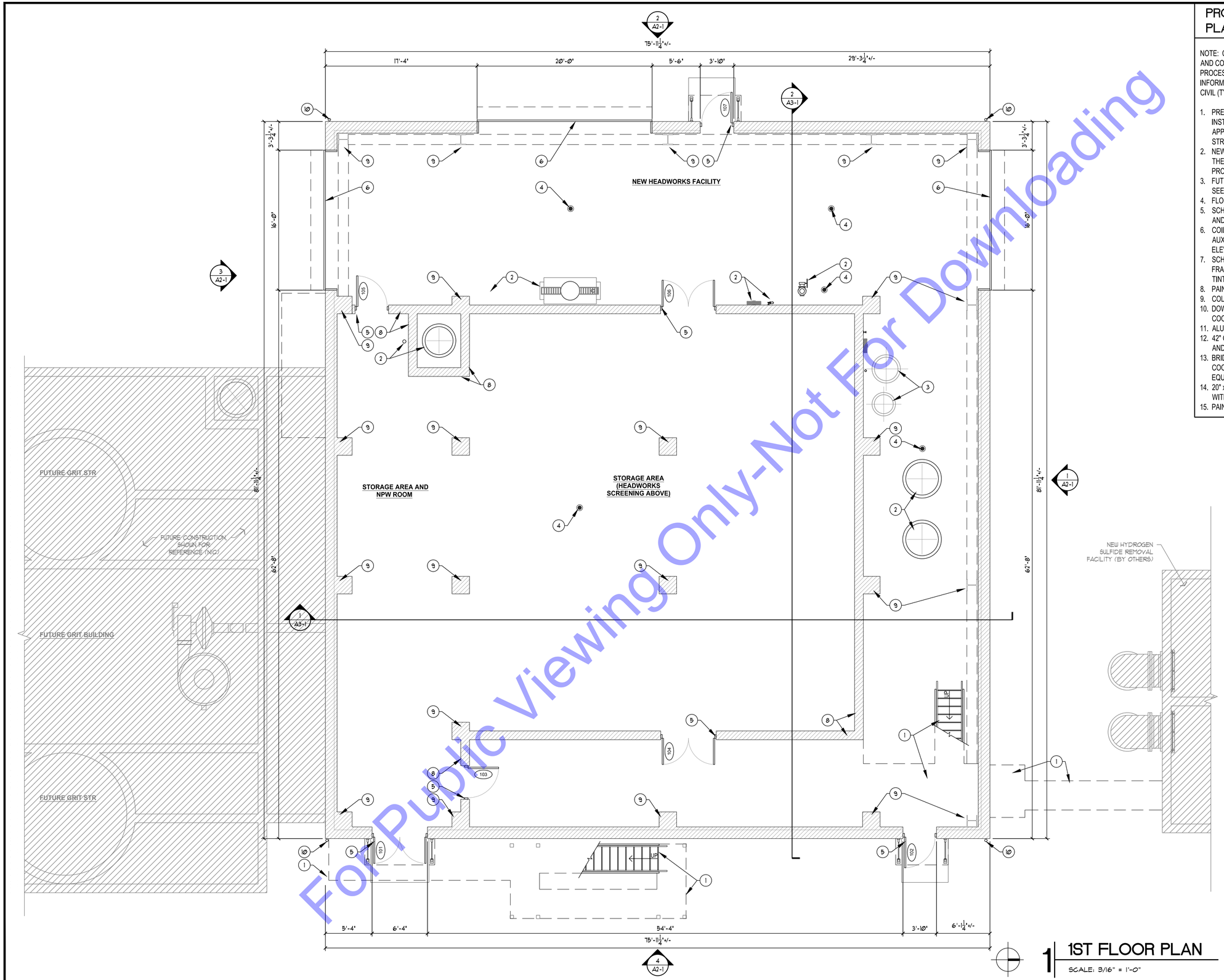

For Public Viewing Only-Not For Downloading

PROPOSED PLAN KEYNOTES:

NOTE: COORDINATE SPECIFIC PRODUCTS, FINISHES, AND COLOR SELECTIONS WITH OWNER. SEE MEP AND PROCESS DRAWINGS FOR EQUIPMENT DETAILS AND INFORMATION. COORDINATE ALL EXTERIOR WORK WITH CIVIL (TYP).

1. PREFAB. ACCESS STAIR AND LANDING SYSTEM, INSTALLED PER, AND IN COMPLIANCE WITH APPLICABLE CODE REQUIREMENTS. SEE STRUCTURAL.
2. NEW MEP EQUIPMENT AS DETAILED ELSEWHERE IN THESE DOCUMENTS. SEE MEP SHEETS AND PROCESS DRAWINGS.
3. FUTURE MEP EQUIPMENT SHOWN FOR REFERENCE. SEE MEP SHEETS AND PROCESS DRAWINGS.
4. FLOOR DRAIN. SEE PLUMBING.
5. SCHEDULED DOOR AND FRAME. VERIFY COLORS AND GLASS TINTING WITH OWNER (TYP).
6. COILING DOOR WITH AUTOMATIC OPERATOR AND AUXILIARY HAND CHAIN. SEE STRUCTURAL AND ELEVATIONS FOR ADDITIONAL INFORMATION.
7. SCHEDULED WINDOW WITH BLACK ANODIZED ALUM. FRAME AND TEMPERED GLASS. VERIFY COLORS AND TINTING WITH OWNER (TYP).
8. PAINTED CONC. WALL. SEE STRUCTURAL.
9. COLUMN. SEE STRUCTURAL.
10. DOWNSPOUT TIED INTO UNDERGROUND DRAIN LINE. COORDINATE WITH CIVIL AND PLUMBING.
11. ALUMINUM GRATING. SEE STRUCTURAL.
12. 42" GUARDRAIL. COORDINATE WITH STRUCTURAL AND PROCESS DRAWINGS.
13. BRIDGE CRANE (ABOVE). SEE STRUCTURAL, AND COORDINATE WITH PROCESS DRAWINGS AND EQUIPMENT SUPPLIER.
14. 20" x 40" (MIN) ATTIC ACCESS ABOVE. COORDINATE WITH OWNER AND STRUCTURAL.
15. PAINTED 8" CMU WALL. SEE STRUCTURAL.

1 1ST FLOOR PLAN

SCALE: 3/16" = 1'-0"

COMMONWEALTH ENGINEERS, INC.
A wealth of resources to master a common goal.
https://commonwealthengineers.com/
OFFICE LOCATIONS IN:
INDIANAPOLIS, IN. (2)
EVANSVILLE, IN.
FORT WAYNE, IN.
CROWN POINT, IN.
BOWLING GREEN, KY.
SOUTH BEND, IN.

DARREN L PETERSON
REGISTERED
No. AR19500143
STATE OF INDIANA
ARCHITECT
Signature
10/03/2025
Date

peterson ARCHITECTURE
298 south 10th street
suite 500
noblesville in 46060
p 317.770.9714
f 317.770.9718
studio@petersonarchitecture.com

TOWN OF NEWBURGH
WARRICK COUNTY, INDIANA

WASTEWATER TREATMENT PLANT FLOW EQ BASIN

© 2023 BY COMMONWEALTH ENGINEERS, INC. ALL RIGHTS RESERVED. REPRODUCTION BY ANY METHOD IN WHOLE OR IN PART WITHOUT PERMISSION IS PROHIBITED

Indiana811
Know what's below. 811 before you dig.
1-800-382-5544
(ITS THE LAW)

No.	Submittal / Revision	By	Date

Designed By:	Drawn By:	Checked By:
---	JRH	DLP
Issue Date: 10/03/25	Project No: 25-0010	Scale: AS SHOWN

NEW HEADWORKS BUILDING - 1ST FLOOR PLAN

Drawing No:
A1-1
Sheet: 128 OF 161

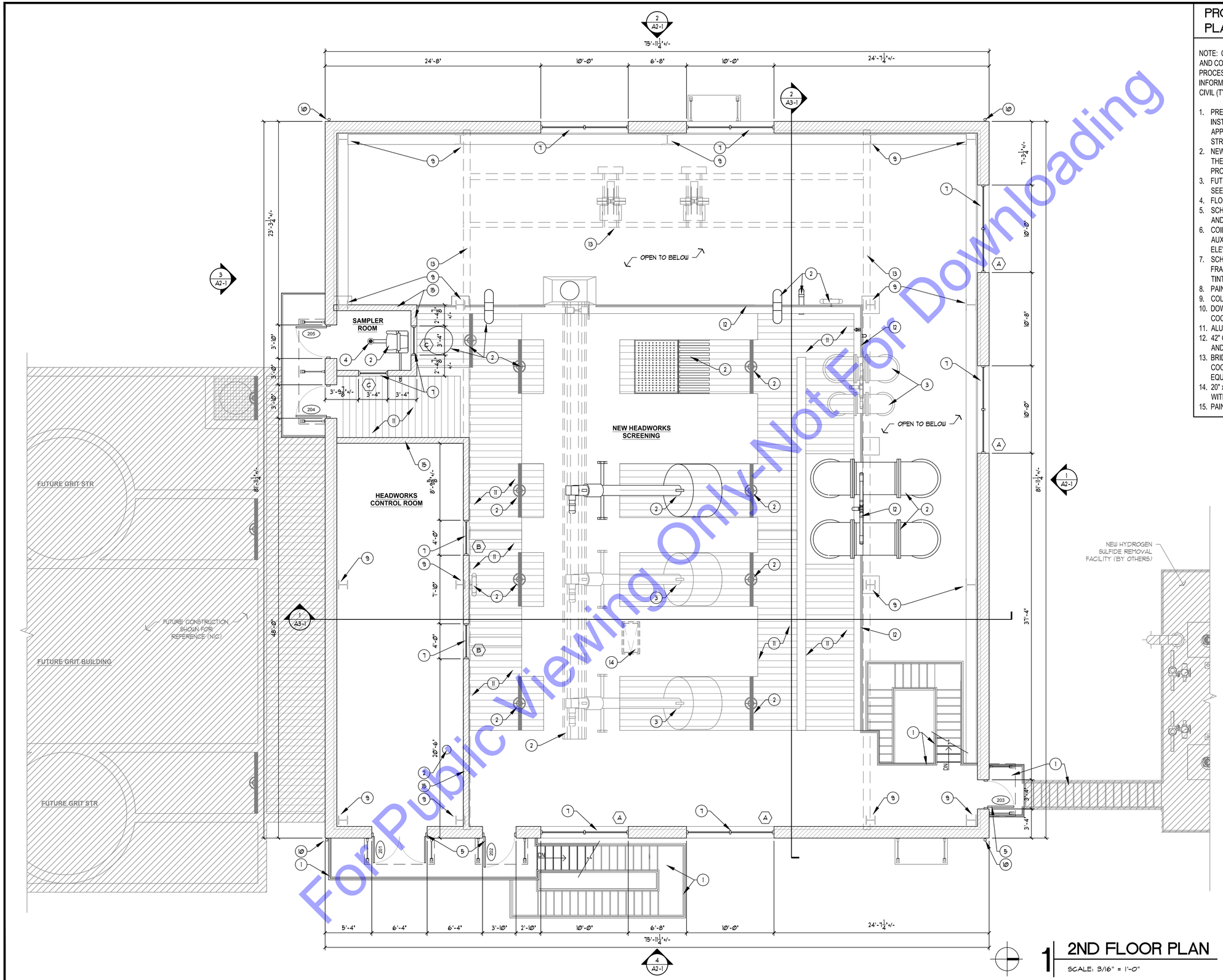

1 2ND FLOOR PLAN

SCALE: 3/16" = 1'-0"

PROPOSED PLAN KEYNOTES:

NOTE: COORDINATE SPECIFIC PRODUCTS, FINISHES, AND COLOR SELECTIONS WITH OWNER. SEE MEP AND PROCESS DRAWINGS FOR EQUIPMENT DETAILS AND INFORMATION. COORDINATE ALL EXTERIOR WORK WITH CIVIL (TYP).

1. PREFAB. ACCESS STAIR AND LANDING SYSTEM, INSTALLED PER, AND IN COMPLIANCE WITH APPLICABLE CODE REQUIREMENTS. SEE STRUCTURAL.
2. NEW MEP EQUIPMENT AS DETAILED ELSEWHERE IN THESE DOCUMENTS. SEE MEP SHEETS AND PROCESS DRAWINGS.
3. FUTURE MEP EQUIPMENT SHOWN FOR REFERENCE. SEE MEP SHEETS AND PROCESS DRAWINGS.
4. FLOOR DRAIN. SEE PLUMBING.
5. SCHEDULED DOOR AND FRAME. VERIFY COLORS AND GLASS TINTING WITH OWNER (TYP).
6. COILING DOOR WITH AUTOMATIC OPERATOR AND AUXILIARY HAND CHAIN. SEE STRUCTURAL AND ELEVATIONS FOR ADDITIONAL INFORMATION.
7. SCHEDULED WINDOW WITH BLACK ANODIZED ALUM. FRAME AND TEMPERED GLASS. VERIFY COLORS AND TINTING WITH OWNER (TYP).
8. PAINTED CONC. WALL. SEE STRUCTURAL.
9. COLUMN. SEE STRUCTURAL.
10. DOWNSPOUT TIED INTO UNDERGROUND DRAIN LINE. COORDINATE WITH CIVIL AND PLUMBING.
11. ALUMINUM GRATING. SEE STRUCTURAL.
12. 42" GUARDRAIL. COORDINATE WITH STRUCTURAL AND PROCESS DRAWINGS.
13. BRIDGE CRANE (ABOVE). SEE STRUCTURAL, AND COORDINATE WITH PROCESS DRAWINGS AND EQUIPMENT SUPPLIER.
14. 20" x 40" (MIN) ATTIC ACCESS ABOVE. COORDINATE WITH OWNER AND STRUCTURAL.
15. PAINTED 8" CMU WALL. SEE STRUCTURAL.

For Public Viewing Only-Not For Downloading

COMMONWEALTH ENGINEERS, INC.
A wealth of resources to master a common goal.
https://commonwealthengineers.com/
OFFICE LOCATIONS IN:
INDIANAPOLIS, IN. (2)
EVANSVILLE, IN.
FORT WAYNE, IN.
CROWN POINT, IN.
BOWLING GREEN, KY.
SOUTH BEND, IN.

DARREN L PETERSON
REGISTERED
No. AR19500143
STATE OF INDIANA
ARCHITECT
Signature
10/03/2025
Date

peterson ARCHITECTURE
298 south 10th street
suite 500
noblesville in 46060
p 317.770.9714
f 317.770.9718
studio@petersonarchitecture.com

TOWN OF NEWBURGH
WARRICK COUNTY, INDIANA

WASTEWATER TREATMENT
PLANT FLOW EQ BASIN

© 2023 BY COMMONWEALTH ENGINEERS, INC. ALL RIGHTS RESERVED. REPRODUCTION BY ANY METHOD IN WHOLE OR IN PART WITHOUT PERMISSION IS PROHIBITED

Indiana811
Know what's below. 811 before you dig.
1-800-382-5544
(ITS THE LAW)

No.	Submittal / Revision	By	Date

Designed By:	Drawn By:	Checked By:
---	JRH	DLP
Issue Date: 10/03/25	Project No: 25-0010	Scale: AS SHOWN

NEW HEADWORKS BUILDING - 2ND FLOOR PLAN

Drawing No:
A1-2
Sheet: 129 OF 161

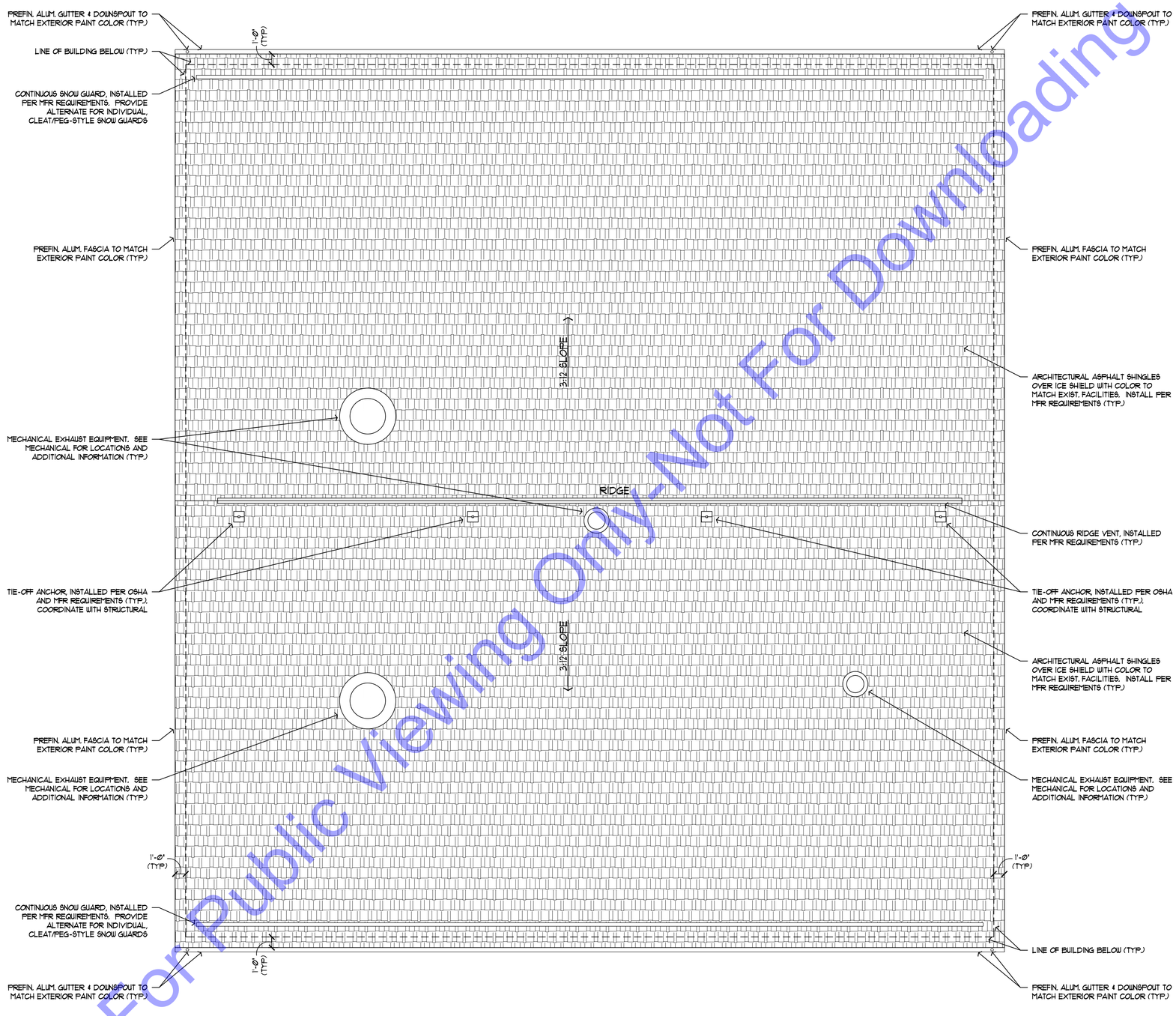

For Public Viewing Only-Not For Downloading

NOTE: INSTALL ICE SHIELD UNDERLAYMENT UNDER ALL ASPHALT SHINGLES THROUGHOUT, AND PER MFR REQUIREMENTS (TYP.)

1 ROOF PLAN

SCALE: 3/16" = 1'-0"

COMMONWEALTH ENGINEERS, INC.
A wealth of resources to master a common goal.
https://commonwealthengineers.com/
OFFICE LOCATIONS IN:
INDIANAPOLIS, IN. (2)
EVANSVILLE, IN.
FORT WAYNE, IN.
CROWN POINT, IN.
BOWLING GREEN, KY.
SOUTH BEND, IN.

DARREN L PETERSON
REGISTERED
No. AR19500143
STATE OF INDIANA
ARCHITECT

Signature

10/03/2025
Date

peterson ARCHITECTURE
298 south 10th street
suite 500
noblesville in 46060
p 317.770.9714
f 317.770.9718
studio@petersonarchitecture.com

TOWN OF NEWBURGH
WARRICK COUNTY, INDIANA

WASTEWATER TREATMENT PLANT FLOW EQ BASIN

© 2023 BY COMMONWEALTH ENGINEERS, INC. ALL RIGHTS RESERVED. REPRODUCTIONS BY ANY METHOD IN WHOLE OR IN PART WITHOUT PERMISSION IS PROHIBITED

Indiana811
Know what's below. 811 before you dig.
1-800-382-5544
(ITS THE LAW)

No.	Submittal Revision	By	Date

Designed By:	Drawn By:	Checked By:
---	JRH	DLP
Issue Date: 10/03/25	Project No: 25-0010	Scale: AS SHOWN

NEW HEADWORKS BUILDING - ROOF PLAN

Drawing No:
A1-3
Sheet: 130 OF 161

ELEVATION KEYNOTES:

NOTE: COORDINATE SPECIFIC PRODUCTS, FINISHES, AND COLOR SELECTIONS WITH OWNER. SEE MEP AND PROCESS DRAWINGS FOR EQUIPMENT DETAILS AND INFORMATION. COORDINATE EXTERIOR WORK AND GRADING WITH CIVIL. VERIFY FLOOR HEIGHTS WITH STRUCTURAL. TYPICAL.

1. APPROX. LINE OF GRADE (TYP). SEE CIVIL.
2. 12" CMU WITH RUNNING BOND, PAINTED TO MATCH EXISTING FACILITIES. SEE STRUCTURAL AND COORDINATE COLOR WITH OWNER.
3. ICE & SNOW GUARD, INSTALLED PER MFR REQUIREMENTS. SEE ROOF PLAN (1/A1-3).
4. PREFINISHED ALUMINUM TRIM AND FASCIA (TYP).
5. CODE COMPLIANT, PREFAB. ACCESS STAIR AND LANDING SYSTEM. SEE STRUCTURAL.
6. NEW MEP EQUIPMENT AS DETAILED ELSEWHERE. SEE MEP SHEETS AND PROCESS DRAWINGS.
7. SCHEDULED DOOR.
8. INSULATED COILING DOOR WITH PROTECTIVE HOOD, FLASHED FOR POSITIVE DRAINAGE. COORDINATE COLOR WITH OWNER AND INSTALL PER MFR REQUIREMENTS (TYP).
9. SCHEDULED WINDOW.
10. PREFINISHED ALUMINUM GUTTER AND DOWNSPOUT.
11. ASPHALT, ARCHITECTURAL SHINGLE ROOF.
12. LINE OF FUTURE CONSTRUCTION, SHOWN FOR REFERENCE (NIC).
13. PREFABRICATED ALUMINUM CANOPY, INSTALLED PER MFR. REQUIREMENTS. COORDINATE WITH STRUCTURAL.
14. APPROX. LOCATION OF VERTICAL MASONRY CONTROL JOINT, SHOWN FOR REFERENCE. SEE STRUCTURAL (TYP).
15. 4" (NOMINAL) PRECAST CONC. SILL.
16. EXHAUST EQUIPMENT SHOWN FOR REFERENCE. SEE MECHANICAL.

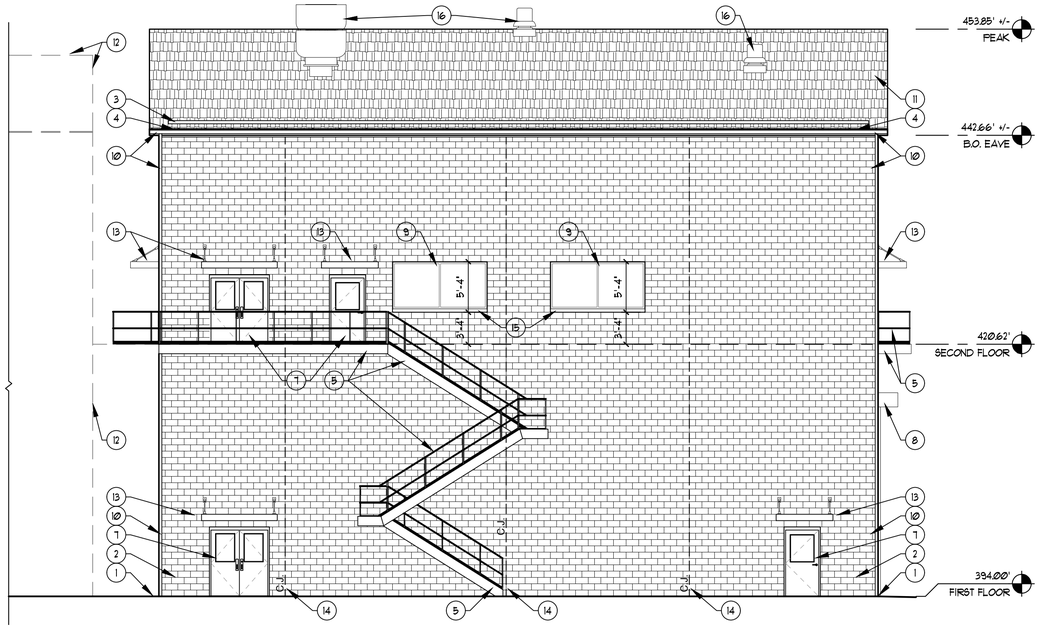

4 EAST ELEVATION

SCALE: 1/8" = 1'-0"

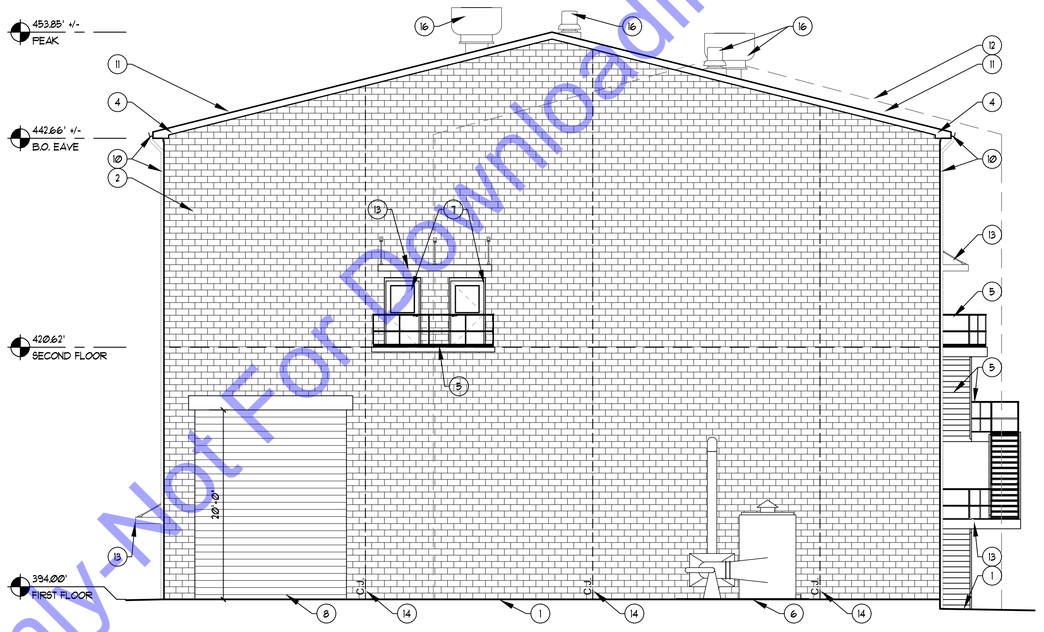

3 SOUTH ELEVATION

SCALE: 1/8" = 1'-0"

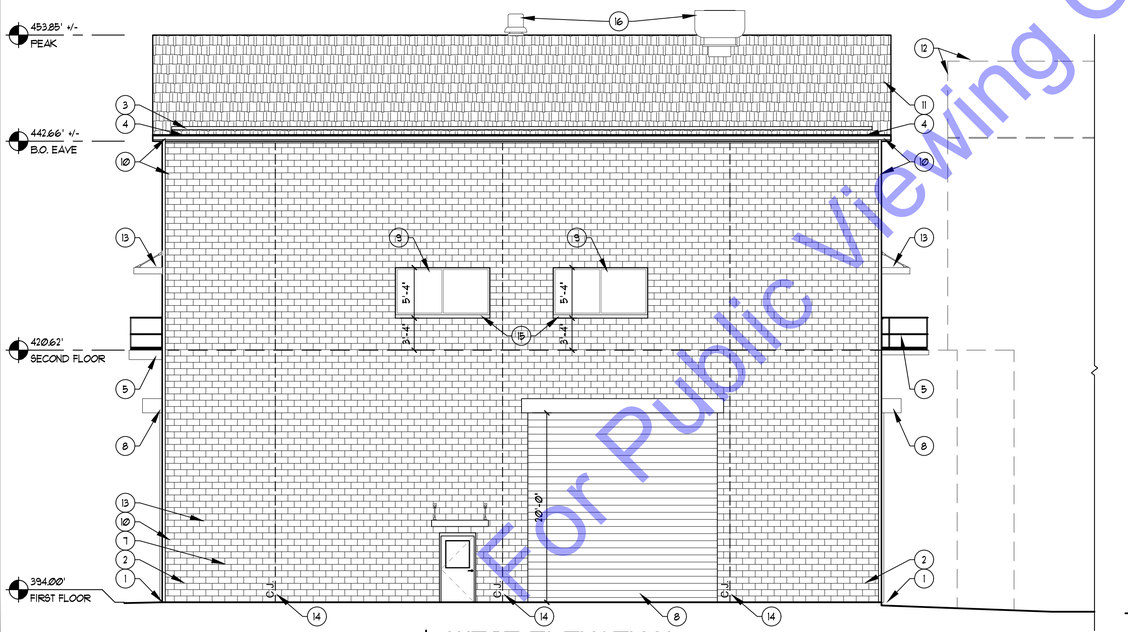

2 WEST ELEVATION

SCALE: 1/8" = 1'-0"

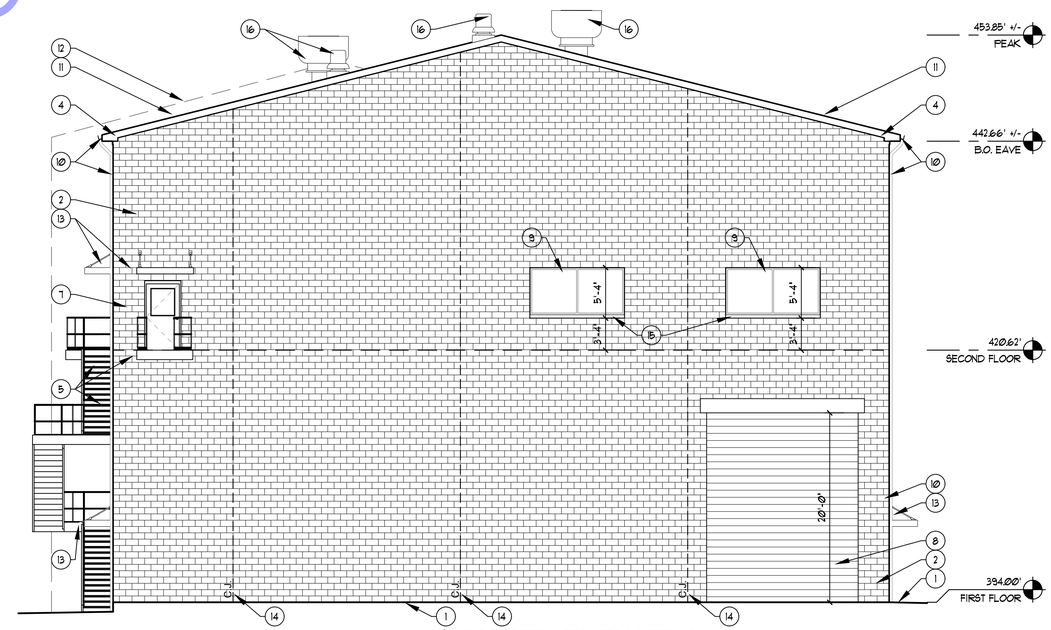

1 NORTH ELEVATION

SCALE: 1/8" = 1'-0"

For Public Viewing Only-Not For Downloading

COMMONWEALTH ENGINEERS, INC.
A wealth of resources to master a common goal.
https://commonwealthengineers.com/
OFFICE LOCATIONS IN:
INDIANAPOLIS, IN. (2)
EVANSVILLE, IN.
FORT WAYNE, IN.
CROWN POINT, IN.
BOWLING GREEN, KY.
SOUTH BEND, IN.

DARREN L PETERSON
REGISTERED
No. AR19500143
STATE OF INDIANA
ARCHITECT

Signature 10/03/2025 Date

peterson ARCHITECTURE
298 south 10th street
suite 500
noblesville in 46060
p 317.770.9714
f 317.770.9718
studio@petersonarchitecture.com

TOWN OF NEWBURGH
WARRICK COUNTY, INDIANA

WASTEWATER TREATMENT
PLANT FLOW EQ BASIN

© 2023 BY COMMONWEALTH
ENGINEERS, INC. ALL RIGHTS
RESERVED. REPRODUCTION
BY ANY METHOD IN WHOLE
OR IN PART WITHOUT
PERMISSION IS PROHIBITED

Indiana811 Know what's below. 811 before you dig. 1-800-382-5544 (ITS THE LAW)

No.	Submittal / Revision	By	Date

Designed By:	Drawn By:	Checked By:
---	JRH	DLP
Issue Date: 10/03/25	Project No: 25-0010	Scale: AS SHOWN

NEW HEADWORKS BUILDING - EXTERIOR ELEVATIONS

Drawing No: **A2-1**

Sheet: 131 OF 161

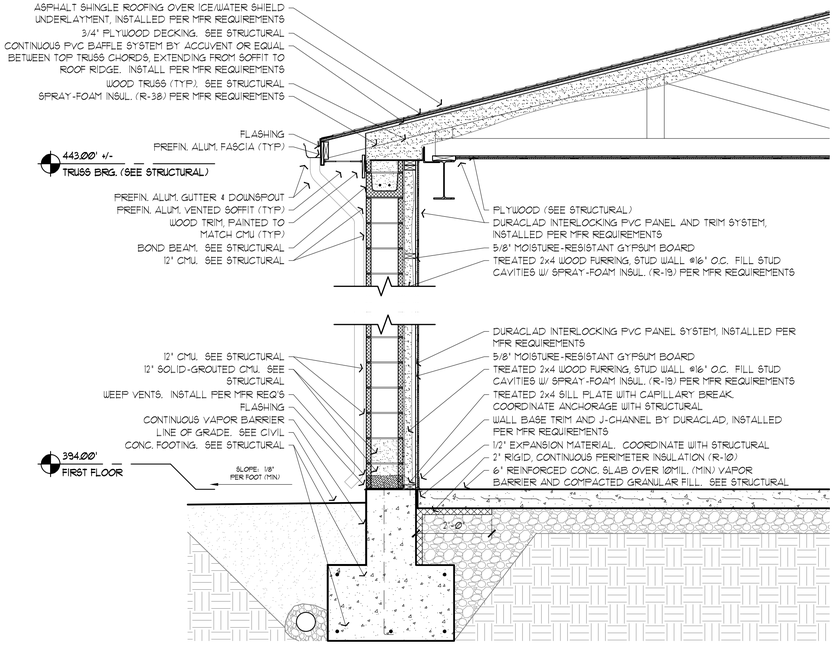

4 TYP. WALL SECTION

SCALE: 1/2" = 1'-0"

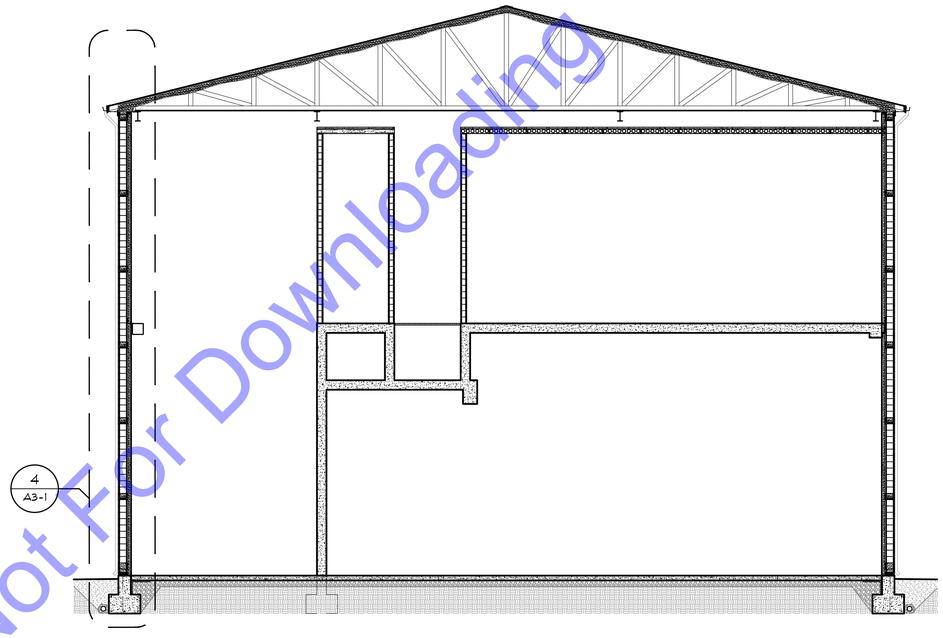

2 BUILDING SECTION

SCALE: 1/8" = 1'-0"

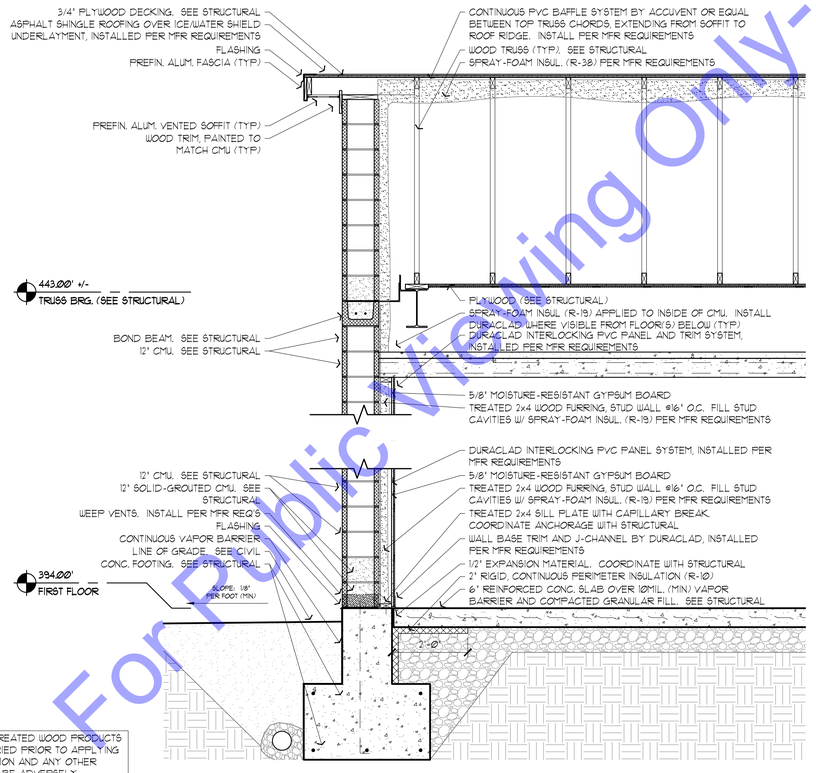

3 TYP. WALL SECTION

SCALE: 1/2" = 1'-0"

NOTE: ENSURE ALL TREATED WOOD PRODUCTS ARE THOROUGHLY DRIED PRIOR TO APPLYING SPRAY FOAM INSULATION AND ANY OTHER PRODUCTS THAT MAY BE ADVERSELY AFFECTED BY DIRECT CONTACT (TYP.). STUD FURRING TO BE SECURED TO INTERIOR SIDE OF 12" CMU WALLS AND INSTALLED PER APPLICABLE CODE REQUIREMENTS.

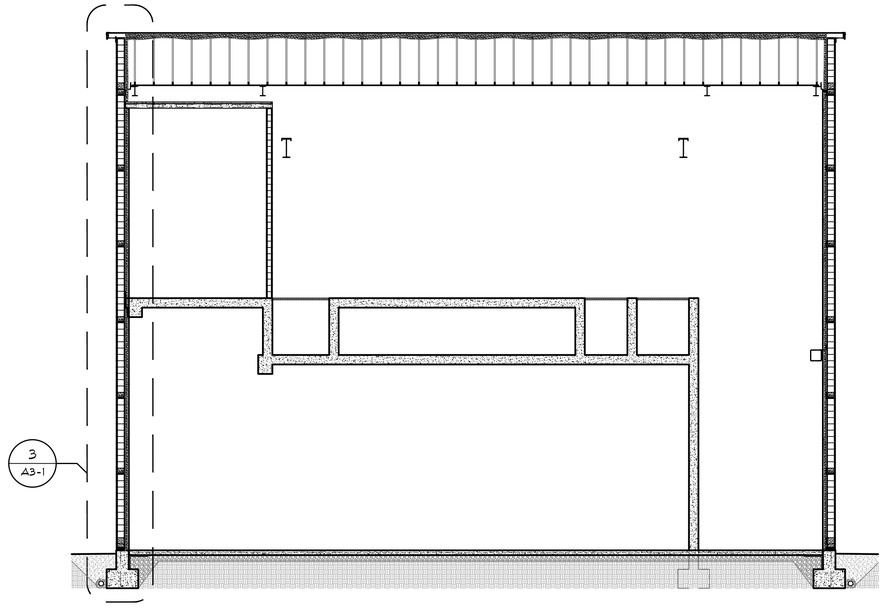

1 BUILDING SECTION

SCALE: 1/8" = 1'-0"

For Public Viewing Only-Not For Downloading

COMMONWEALTH ENGINEERS, INC.
A wealth of resources to master a common goal.
https://commonwealthengineers.com/
OFFICE LOCATIONS IN:
INDIANAPOLIS, IN. (2)
EVANSVILLE, IN.
FORT WAYNE, IN.
CROWN POINT, IN.
BOWLING GREEN, KY.
SOUTH BEND, IN.

DARREN L. PETERSON
REGISTERED
No. AR19500143
STATE OF INDIANA
ARCHITECT
Signature
10/03/2025
Date

peterson ARCHITECTURE
298 south 10th street
suite 500
noblesville in 46060
p 317.770.9714
f 317.770.9718
studio@petersonarchitecture.com

TOWN OF NEWBURGH
WARRICK COUNTY, INDIANA

WASTEWATER TREATMENT
PLANT FLOW EQ BASIN

© 2023 BY COMMONWEALTH ENGINEERS, INC. ALL RIGHTS RESERVED. REPRODUCTION BY ANY METHOD IN WHOLE OR IN PART WITHOUT PERMISSION IS PROHIBITED

Know what's below. 811 before you dig.
1-800-382-5544
(IT'S THE LAW)

No.	Submittal / Revision	By	Date

Designed By:	Drawn By:	Checked By:
---	JRH	DLP
Issue Date: 10/03/25	Project No: 25-0010	Scale: AS SHOWN

NEW HEADWORKS BUILDING - BUILDING SECTIONS

Drawing No:
A3-1
Sheet: 132 OF 161

DOOR AND FRAME SCHEDULE

	DOOR				FRAME								
NO.	SIZE	TYPE	MAT'L	GLASS	TYPE	MAT'L	JAMB	HEAD	SILL	LABEL	HARDWARE SET NO.	OPG. RATING	REMARKS
101	(2) 3'-0" x 7'-0" x 1 3/4"	A	ALUM	1" INSULATED; TEMPERED; LOW-E	F1	ALUM	J1	H1	--	--	1	--	DOUBLE DOOR
102	3'-6" x 7'-0" x 1 3/4"	A	ALUM	1" INSULATED; TEMPERED; LOW-E	F1	ALUM	J1	H1	--	--	1	--	--
103	3'-6" x 7'-0" x 1 3/4"	A	ALUM	1/4" TEMPERED	F2	ALUM	J2	H2	--	--	3	--	--
104	(2) 3'-0" x 7'-0" x 1 3/4"	A	ALUM	1/4" TEMPERED	F2	ALUM	J2	H2	--	--	3	--	DOUBLE DOOR
105	3'-6" x 7'-0" x 1 3/4"	A	ALUM	1/4" TEMPERED	F2	ALUM	J2	H2	--	--	3	--	--
106	(2) 3'-0" x 7'-0" x 1 3/4"	A	ALUM	1/4" TEMPERED	F2	ALUM	J2	H2	--	--	3	--	DOUBLE DOOR
107	3'-6" x 7'-0" x 1 3/4"	A	ALUM	1" INSULATED; TEMPERED; LOW-E	F1	ALUM	J1	H1	--	--	1	--	--
201	(2) 3'-0" x 7'-0" x 1 3/4"	A	ALUM	1" INSULATED; TEMPERED; LOW-E	F1	ALUM	J1	H1	--	--	2	--	DOUBLE DOOR
202	3'-6" x 7'-0" x 1 3/4"	A	ALUM	1" INSULATED; TEMPERED; LOW-E	F1	ALUM	J1	H1	--	--	1	--	--
203	3'-0" x 7'-0" x 1 3/4"	A	ALUM	1" INSULATED; TEMPERED; LOW-E	F1	ALUM	J1	H1	--	--	2	--	INSTALL "NOT AN EXIT" SIGN ON INTERIOR SIDE OF DOOR
204	3'-6" x 7'-0" x 1 3/4"	A	ALUM	1" INSULATED; TEMPERED; LOW-E	F1	ALUM	J1	H1	--	--	1	--	INSTALL "NOT AN EXIT" SIGN ON INTERIOR SIDE OF DOOR
205	3'-6" x 7'-0" x 1 3/4"	A	ALUM	1" INSULATED; TEMPERED; LOW-E	F1	ALUM	J1	H1	--	--	1	--	--

NOTE: SEE PLAN FOR DOOR LOCATIONS AND DETAILS 1&3/A4-1 FOR ADDITIONAL DOOR AND FRAME TYPE INFORMATION. COORDINATE OPENINGS WITH STRUCTURAL. WHERE AVAILABLE, ALL DOOR HARDWARE SHALL BE STAINLESS STEEL OR OTHER APPROVED CORROSION-RESISTANT MATERIAL (TYP).

ROOM FINISH SCHEDULE

ROOM	FLOOR		BASE		WALLS								CEILING			
					NORTH		EAST		SOUTH		WEST					
NAME	MAT'L	FINISH	MAT'L	FINISH	MAT'L	FINISH	MAT'L	FINISH	MAT'L	FINISH	MAT'L	FINISH	MAT'L	FINISH	HEIGHT	REMARKS
NEW HEADWORKS FACILITY	CONC	CS-1	SEE NOTES	SEE NOTES	PVC	PREFIN	CONC/PVC	PT-1/PREFIN	CONC/PVC	PT-1/PREFIN	CONC/PVC	PT-1/PREFIN	PLYWOOD	PT-2	--	--
STORAGE AREA	CONC	CS-1	SEE NOTES	SEE NOTES	CONC	PT-1	CONC/PVC	PT-1/PREFIN	PVC	PREFIN	CONC	PT-1	CONC	PT-1	--	--
NEW HEADWORKS SCREENING	CONC	CS-1	SEE NOTES	SEE NOTES	PVC	PREFIN	CONC/PVC	PT-1/PREFIN	CONC/PVC	PT-1/PREFIN	CONC/PVC	PT-1/PREFIN	PLYWOOD	PT-2	--	--
CONTROL ROOM	CONC	CS-1	SEE NOTES	SEE NOTES	CONC	PT-1	PVC	PREFIN	PVC	PREFIN	CONC	PT-1	CONC	PT-1	--	--
SAMPLER ROOM	CONC	CS-1	SEE NOTES	SEE NOTES	CONC	PT-1	CONC	PT-1	PVC	PREFIN	CONC	PT-1	CONC	PT-1	--	--

NOTES: SEE ELEVATIONS AND TYPICAL WALL SECTIONS (DETAILS 3&4/A3-1) FOR ADDITIONAL FINISH INFORMATION AND TYPICAL INSTALLATION ASSEMBLY AT EXTERIOR WALLS. INSTALL DURACLAD PVC PANELS, TRIM KITS, AND BASE PRODUCTS PER MFR REQUIREMENTS, AND ENSURE COMPLETE PROTECTIVE COVERAGE OF FURRED WALL ASSEMBLIES AT EXTERIOR WALLS. INTERIOR WALLS, COMPRISED OF EXPOSED CONCRETE OR CMU TO RECEIVE "PT-1" COATING OVER BLOCK FILLER AND/OR PRIMER AS NEEDED FOR CONSISTENT COVERAGE. PROVIDE ALTERNATE TO INSTALL 4" VINYL WALL BASE ON ALL INTERIOR CONC. AND CMU WALLS. PROVIDE FINISH COLOR SAMPLES AND/OR INSTALLATION MOCK-UPS PER REQUEST BY THE OWNER (TYP).

FINISH MATERIALS

MARK	DESCRIPTION	LOCATION(S)	REMARKS
PREFIN PVC	MFR: DURACLAD NAME: INTERLOCKING PANEL SYSTEM COLOR: PREFIN PER MFR (WHITE)	INTERIOR SIDE OF EXTERIOR WALLS. SEE TYPICAL WALL SECTIONS (3&4/A3-1)	PVC PANELS WITH FACTORY FINISH AND (WHITE) COLOR FROM MFR. PANELS SHALL NOT RECEIVE ANY ADDITIONAL FIELD-APPLIED FINISH/COATING, AND SHALL BE INSTALLED PER MFR REQUIREMENTS
CS-1	MFR: TNEMEC CO. INC NAME: PRIME-A-PELL H20 (SERIES 633) COLOR: CLEAR	ALL CONC. FLOOR, WALKING SURFACES	APPLY SEALER TO ALL CONCRETE WALKING FLOOR SURFACES ON FIRST AND SECOND FLOORS. ALL OTHER FLOOR SURFACES AND GRATING ARE SHALL NOT RECEIVE ANY ADDITIONAL FIELD-APPLIED FINISH/COATING UNLESS NOTED OTHERWISE.
PT-1	MFR: TNEMEC CO, INC (OR EQUAL) NAME: EPOXY-BASED COLOR: WHITE	INTERIOR, EXPOSED CONC. AND CMU WALLS	APPLY BLOCK FILLER AND/OR PRIMER AS NEEDED FOR CONSISTENT COVERAGE.
PT-2	MFR: TNEMEC CO, INC (OR EQUAL) NAME: EPOXY-BASED COLOR: WHITE	UNDERSIDE OF PLYWOOD CEILING	APPLY PRIMER AS NEEDED FOR CONSISTENT COVERAGE.

NOTE: CONFIRM SPECIFIC PRODUCTS, FINISHES, COLORS, ETC. WITH TENANT. ANY PROPOSED SUBSTITUTIONS SHALL BE COORDINATED WITH THE TENANT. SEE INTERIOR ELEVATIONS (SHEET A201) FOR ADDITIONAL FINISH AND MILLWORK INFORMATION. INSTALL ALL PRODUCTS AND FINISHES PER MFR AND APPLICABLE CODE REQUIREMENTS.

WINDOW SCHEDULE

TYPE	SILL HT	DETAILS			REMARKS
		SILL	HEAD	JAMB	
SECOND FLOOR					
A	SEE 2/A4-1	S1	H3	J3	FIXED WINDOW WITH THERMALLY BROKEN BLACK ANODIZED ALUM FRAME AND 1" INSULATED, LOW-E DOUBLE-PANE TEMPERED GLASS PANELS.
B	SEE 2/A4-1	S2	H4	J4	FIXED WINDOW WITH BLACK ANODIZED ALUM FRAME AND 1/4" TEMPERED GLASS PANEL.
C	SEE 2/A4-1	S2	H4	J4	FIXED WINDOW WITH BLAST MITIGATION AND BLACK ANODIZED ALUM FRAME. FIRE CAULK CONNECTIONS.

NOTE: SEE WINDOW & FRAME ELEVATIONS (2/A4-1) FOR ADDITIONAL INFORMATION. PROVIDE SAMPLES UPON REQUEST, AND VERIFY FRAME FINISH AND GLASS TINTING WITH OWNER.

ABBREVIATIONS

AFF	ABOVE FINISHED FLOOR
ALUM	ALUMINUM
CONC	CONCRETE
CS	CONCRETE SEALER
FD	FLOOR DRAIN
FRP	FIBERGLASS REINFORCED PLASTIC
GB	GYPSUM BOARD
HM	HOLLOW METAL
KD	KNOCK DOWN FRAME
MFR	MANUFACTURER
PREFIN	PREFINISHED
SCWD	SOLID CORE WOOD DOOR
TYP	TYPICAL
VIF	VERIFY IN FIELD

HARDWARE SCHEDULE

SET #1:	SET #2:
ENTRANCE LOCKSET PANIC HARDWARE (3) HINGES PER DOOR PANEL ADA-COMPLIANT THRESHOLD WEATHERSTRIPPING DRIP EDGE CLOSER DOOR SWEEP KICK PLATE	ENTRANCE LOCKSET LEVER HANDLES (3) HINGES PER DOOR PANEL ADA-COMPLIANT THRESHOLD WEATHERSTRIPPING DRIP EDGE DOOR SWEEP
SET #3:	
STOREROOM LOCKSET LEVER HANDLES (3) HINGES PER DOOR PANEL ADA-COMPLIANT THRESHOLD KICK PLATE CLOSER	

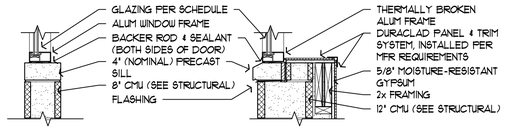

S2 S1

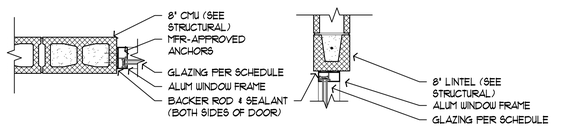

J4 H4

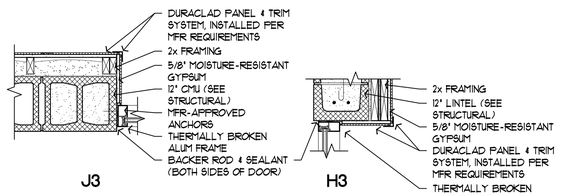

J3 H3

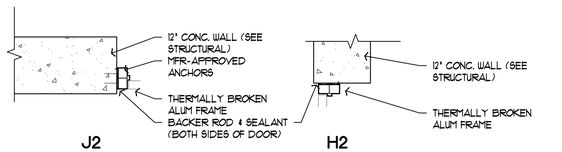

J2 H2

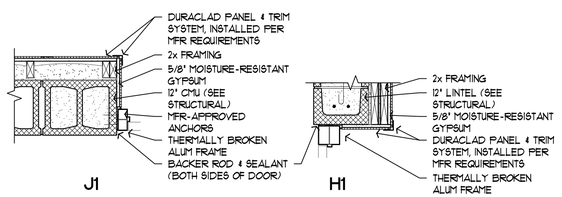

J1 H1

1 DOOR HEAD + JAMB DETAILS

SCALE: 3/4" = 1'-0"

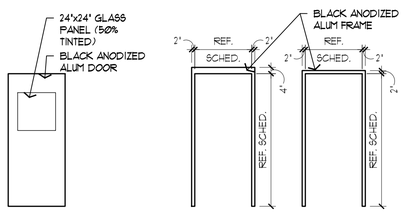

A F1 F2

3 DOOR + FRAME TYPES

SCALE: 1/4" = 1'-0"

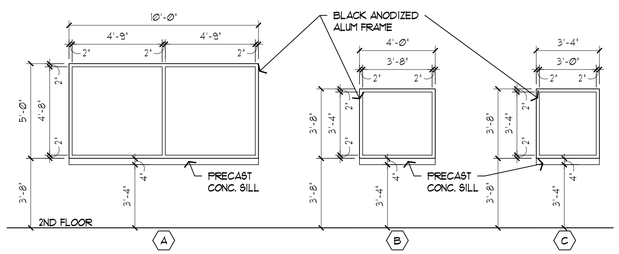

A B C

2 WINDOW + FRAME TYPES

SCALE: 1/4" = 1'-0"

For Public Viewing Only-Not For Download

COMMONWEALTH ENGINEERS, INC.
A wealth of resources to master a common goal.
https://commonwealthengineers.com/
OFFICE LOCATIONS IN:
INDIANAPOLIS, IN. (2)
EVANSVILLE, IN.
FORT WAYNE, IN.
CROWN POINT, IN.
BOWLING GREEN, KY.
SOUTH BEND, IN.

DARREN L PETERSON
REGISTERED
No. AR19500143
STATE OF INDIANA
ARCHITECT
Signature 10/03/2025 Date

peterson ARCHITECTURE
298 south 10th street
suite 500
noblesville in 46060
p 317.770.9714
f 317.770.9718
studio@petersonarchitecture.com

TOWN OF NEWBURGH
WARRICK COUNTY, INDIANA
WASTEWATER TREATMENT
PLANT FLOW EQ BASIN

© 2023 BY COMMONWEALTH ENGINEERS, INC. ALL RIGHTS RESERVED. REPRODUCTION BY ANY METHOD IN WHOLE OR IN PART WITHOUT PERMISSION IS PROHIBITED

Know what's below. 811 before you dig. 1-800-382-5544 (IN'S THE LAW)

No.	Submittal / Revision	By	Date

Designed By:	Drawn By:	Checked By:
---	JRH	DLP
Issue Date: 10/03/25	Project No: 25-0010	Scale: AS SHOWN

NEW HEADWORKS BUILDING - SCHEDULES & DETAILS

Drawing No: **A4-1**

Sheet: 133 OF 161

HEAT/COOL DUCTLESS SPLIT SYSTEM HEAT PUMP UNIT

GENERAL NOTES:

(1) - COOLING CAPACITY BASED ON 95° O.A.T. AND 80°/67° INDOOR TEMPERATURE

UNIT ACCESSORIES:

1 - OPERATION TO -20° HEAD PRESSURE CONTROL
2 - WALL MOUNTED T'STAT WITH SUBBASE-HEATING/COOLING WITH AUTOMATIC CHANGEOVER
3 - CONDENSATE PUMP
4 - COLD TEMPERATURE KIT & OUTDOOR DRAIN PAN HEATER
5 - HEAT PUMP WALL MOUNT BRACKET QSWBSS (STAINLESS-STEEL)
6 - LINE SET COVER AND WALL SLEEVE

IDENTIFICATION		FCU-1&2/HP-1&2 SCREEN ELECTRICAL ROOM
MANUFACTURER		FUJITSU
A/C UNIT MODEL NO.		ACUH12KUAS
A/C UNIT TYPE		CEILING CASSETTE
HEAT PUMP UNIT MODEL NO.		AOUH12KUAS1
HEAT PUMP UNIT TYPE		REMOTE
SEER		23.7
UNIT ACCESSORIES		1 2 3 4 5 6
INDOOR COIL	CFM	359 (HIGH SPD, WET COIL)
INDOOR COIL	MIN. OUTSIDE AIR	0
INDOOR COIL	ELEC MCA/MOCP	5.8/20
INDOOR COIL	COOL/HEAT CAPACITY	24,000/29,000
COND. UNIT	ELEC	208-230/1/60
COND. UNIT	ELEC MCA/MOCP	11.7/20
REMARKS		WIRED THERMOSTAT

APPLICABLE CODES AND STANDARDS

1. MECHANICAL INSTALLATION TO BE IN ACCORDANCE WITH APPLICABLE LOCAL, STATE, AND FEDERAL CODES HAVING JURISDICTION.
2. CODES CONSIDERED APPLICABLE TO THIS PROJECT INCLUDE BUT ARE NOT LIMITED TO:
   A. OBC; 2011 INDIANA BUILDING CODE - BASED ON IBC 2009.
   B. OMC; 2011 INDIANA MECHANICAL CODE - BASED ON IMC 2009.
   C. OPC; 2011 INDIANA PLUMBING CODE - BASED ON IPC 2009.
   D. OFC; 2011 INDIANA FIRE CODE - BASED ON IFC 2009
   E. IECC; 2009 INTERNATIONAL ENERGY CONSERVATION CODE.
   F. ASHRAE STANDARD 90.1 2007 ENERGY STANDARDS FOR BUILDINGS EXCEPT LOW-RISE RESIDENTIAL BUILDINGS.
   G. NFPA 13: 2010 SPRINKLER SYSTEM INSTALLATION.
   H. NFPA 14: 2010 STANDPIPE AND HOSE SYSTEMS.
   I. NFPA 70. 2011 NATIONAL ELECTRIC CODE (NEC)
   J. NFPA 72. 2010 FIRE ALARM AND SIGNALING CODE.
   K. ANSI HANDICAPPED CODE A117.1
   L. AGA: AMERICAN GAS ASSOCIATION.
   M. AMCA: AIR MOVING AND CONDITIONING ASSOCIATIONS, INC.
   N. ANSI: AMERICAN NATIONAL STANDARDS INSTITUTE.
   O. ARI: AMERICAN REFRIGERATION INSTITUTE.
   P. ASHRAE: AMERICAN SOCIETY OF HEATING REFRIGERATION AND AIR CONDITIONING ENGINEERS.
   Q. ASME: AMERICAN SOCIETY OF MECHANICAL ENGINEERS.
   R. ASTM: AMERICAN SOCIETY FOR TESTING AND MATERIALS.
   S. MSS: MANUFACTURER'S STANDARDIZATION SOCIETY OF THE VALVE AND FITTING INDUSTRY.
   T. NEMA: NATIONAL ELECTRIC MANUFACTURER'S ASSOCIATION.
   U. NFPA: NATIONAL FIRE PROTECTION ASSOCIATION.
   V. SMACNA: SHEET METAL CONSTRUCTION FOR VENTILATING AND AIR-CONDITIONING SYSTEMS.
   W. UL: UNDERWRITER'S LABORATORIES, INC.
3. INSTALL ALL WORK IN STRICT CONFORMITY WITH APPLICABLE CODES.
4. SUBMIT AND/OR FILE WITH PROPER AUTHORITIES NECESSARY CONTRACT DOCUMENTS AS REQUIRED BY GOVERNING AUTHORITIES.

COORDINATION NOTES

1. VISIT SITE AND BE INFORMED OF CONDITIONS UNDER WHICH WORK MUST BE PERFORMED.
2. GENERAL CONTRACTOR OR CONSTRUCTION MANAGER SHALL COORDINATE LOCATION AND PROVIDE SUPPORT FRAMING FOR ALL ROOF-MOUNTED HVAC EQUIPMENT.
3. GENERAL CONTRACTOR OR CONSTRUCTION MANAGER SHALL INCLUDE ADEQUATE TIME IN THE CONSTRUCTION SCHEDULE FOR THE TEST & BALANCE SUBCONTRACTOR TO COMPLETE THE SETUP AND BALANCE OF ALL AIR AND WATER FLOW SYSTEMS IN THE PROJECT AFTER THE MECHANICAL SUBCONTRACTOR HAS ALL AIR AND WATER SYSTEMS IN CONTINUOUS, STABLE OPERATION AND UNDER CONTROL. PRIOR TO STARTING THE TESTING AND BALANCING WORK, THE DIVISION 23 SUBCONTRACTOR SHALL FURNISH COMPLETED SETUP AND COMMISSIONING WORKSHEETS AS LISTED IN SECTION 230800 TO THE TEST AND BALANCE SUBCONTRACTOR AS EVIDENCE THAT THE SYSTEMS HAVE BEEN SETUP, CHECKED AND ARE OPERATIONALLY READY FOR BALANCING,
4. NO SUBSEQUENT ALLOWANCE WILL BE MADE BECAUSE OF ERROR OR FAILURE TO OBTAIN NECESSARY INFORMATION TO COMPLETELY ESTIMATE AND PERFORM ALL WORK INVOLVED.
5. CAREFULLY EXAMINE DRAWINGS AND SPECIFICATIONS TO BE THOROUGHLY FAMILIAR WITH ITEMS WHICH REQUIRE PLUMBING OR HVAC CONNECTIONS AND COORDINATION.
6. NOTIFY OTHER TRADES OF ANY DEVIATIONS OR SPECIAL CONDITIONS NECESSARY FOR INSTALLATION OF WORK.
7. RESOLVE INTERFERENCES BETWEEN WORK OF OTHER TRADES PRIOR TO INSTALLATION.
8. ADVISE OTHER TRADES TO LEAVE PROPER CHASES AND OPENINGS, PLACE OUTLETS, ANCHORS, SLEEVES, AND SUPPORTS PRIOR TO POURING CONCRETE OR INSTALLATION OF MASONRY WORK.
9. IN AREAS OF RENOVATION, INSTALLATION OF NEW PIPING, DUCTWORK, AND EQUIPMENT WILL REQUIRE REMOVAL OF THE EXISTING CEILING AND GRID. SURVEY THE SITE AND BE INFORMED OF EXISTING CONDITIONS WHICH WILL REQUIRE CEILING REMOVAL. INCLUDE THE COST OF THE CEILING WORK OR COORDINATE ITS REMOVAL WITH THE GENERAL CONTRACTOR.
10. ADDITIONAL INSTALLATION COST ASSOCIATED WITH SUBSTITUTED EQUIPMENT REQUIRING ADDITIONAL WORK ON THE PART OF THIS CONTRACTOR OR OTHER SUBCONTRACTORS TO SATISFY THE MANUFACTURER'S INSTALLATION REQUIREMENTS SHALL BE THE RESPONSIBILITY OF THE SUBMITTING CONTRACTOR.
11. COORDINATE ALL NECESSARY POWER CONNECTIONS AS RECOMMENDED BY THE MANUFACTURERS OF INSTALLED EQUIPMENT WITH ELECTRICAL TRADESMEN.
12. COORDINATE WITH ELECTRICAL TRADESMEN FOR PROPER SIZING OF CIRCUIT BREAKERS, FUSES, SAFETY SWITCHES, CONDUIT AND WIRING FOR ALL EQUIPMENT FURNISHED BY DIVISION 23 EQUIPMENT PRIOR TO ROUGH-IN.
13. DO NOT ROUTE ANY PIPING DIRECTLY ABOVE OR 42 INCHES IN FRONT OF ELECTRICAL SWITCHGEAR, PANELS OR TRANSFORMERS.
14. IN CERTAIN AREAS OF RENOVATION. INSTALLATION OF NEW PIPING, DUCTWORK, AND EQUIPMENT AS WELL AS HIGHER CEILING HEIGHTS WILL REQUIRE OFFSETTING, RAISING AND IN SOME INSTANCES RELOCATING OF EXISTING PIPING, DUCTWORK, RAIN WATER LEADERS, SPRINKLERS, AND CONDUIT. SURVEY THE SITE AND BE INFORMED OF EXISTING CONDITIONS IN PARTICULAR ABOVE CEILINGS WHICH WILL REQUIRE OFFSETTING AND OR RELOCATION OF EXISTING PIPING, DUCTWORK AND CONDUIT AND INCLUDE THE COST OF THIS WORK.

MECHANICAL LEGEND

PIPING		DUCTWORK	
CHS	CHILLED WATER SUPPLY		SUPPLY DUCTWORK
CHR	CHILLED WATER RETURN		RETURN OR EXHAUST DUCTWORK
HWS	HOT WATER SUPPLY	FD	FIRE DAMPER
HWR	HOT WATER RETURN	SD	SMOKE DAMPER
HWRR	HOT WATER REVERSE RETURN	F/SD	COMBINATION FIRE & SMOKE DAMPER
CWS	CONDENSER WATER SUPPLY	240	SUPPLY DIFFUSER & AIR QUANTITY (INDICATES 4-WAY BLOW)
CWR	CONDENSER WATER RETURN	150 SW (2W)	SUPPLY DIFFUSER & AIR QUANTITY INDICATES 3-WAY BLOW (2-WAY BLOW)
STM.(PSI)	STEAM SUPPLY PIPING AND IT'S PRESSURE	140R	RETURN AIR GRILLE & AIR QUANTITY
C.R.	STEAM CONDENSATE RETURN	150E	EXHAUST AIR GRILLE & AIR QUANTITY
P.C.R.	PUMPED STEAM CONDENSATE RETURN		REDUCER/TRANSITION
D	DRAIN LINE	H	STEAM HUMIDIFIER
RS	REFRIGERANT SUCTION	T	THERMOSTAT (ADJUSTABLE)
RL	REFRIGERANT LIQUID	TX	THERMOSTAT (CONCEALED / KEY OPER.)
FTS	FINNED TUBE SUPPLY	H	HUMIDISTAT
FTR	FINNED TUBE RETURN	R	RISE IN DUCTWORK
FOS	FUEL OIL SUPPLY	D	DROP IN DUCT
FOR	FUEL OIL RETURN		CONICAL TEE
V	EQUIPMENT VENT		BELLMOUTH CONNECTION
E.O.M.	END OF MAIN DRIP		DUCT WITH INTERNAL SOUND LINER
P.R.V.	PRESSURE REDUCING VALVE	SP.D.	SPLITTER DAMPER
T	STEAM TRAP		REHEAT COIL
	BALL VALVE	A	ELECTRIC REHEAT BOX, CLEARANCE SPACE AND IDENTIFICATION
	GATE VALVE	A*	ASTERISK WITH REHEAT BOX INDICATES 3-WAY HOT WATER CONTROL VALVE
	GLOBE VALVE	A	HOT WATER REHEAT BOX AND IDENTIFICATION
	BUTTERFLY VALVE		SQUARE ELBOW WITH TURNING VANES
	CONTROL VALVE	M.B.D.	MANUAL BALANCE DAMPER
	STRAINER WITH HOSE END DRAIN CONNECTION	A.T.C.	AUTOMATIC TEMP. CONTROL PANEL
	STRAINER AND BLOWDOWN VALVE	A.D.	ACCESS DOOR
	B&G CIRCUIT SETTER, OR EQUAL, BALANCING VALVE	M.L.	MARINE LIGHT
	PLUG COCK (BALANCING VALVE)	50	INDICATES 3/4" DOOR UNDERCUT. DIRECTION & QUAN. OF ROOM AIR PRESS.
	UNION	50	INDICATES DIRECTION & QUANTITY OF ROOM AIR PRESSURIZATION.
	COMPANION FLANGE	S D	DUCT MOUNTED SMOKE DETECTOR
	CHECK VALVE	S P	DUCT MOUNTED STATIC PRESSURE CONTROLLER
	GUIDE	A.F.F.	ABOVE FINISHED FLOOR
	ANCHOR	A.F.R.	ABOVE FINISHED ROOF
	GAUGE & GAUGE COCK		MANUAL BALANCING DAMPER
	THERMOMETER	PI	PRESSURE INDICATOR (GAUGE)
M	MOTORIZED VALVE		

HVAC GENERAL NOTES:

1. DRAWINGS ARE DIAGRAMMATIC AND INDICATE THE APPROXIMATE ROUTING OF PIPING AND DUCTWORK. THE CONTRACTOR SHALL COORDINATE WITH OTHER TRADES TO AVOID CONFLICTS AND DELAYS. MINOR OFFSETS AND ADJUSTMENTS SHALL BE PROVIDED WHERE REQUIRED AT NO ADDITIONAL COST TO THE OWNER.
2. SPECIAL CONDITIONS: JOBSITE IS A WASTE WATER TREATMENT PLANT. EMISSIONS FROM WASTE STREAM CAN BE CORROSIVE AND COILS WILL REQUIRE CORROSION RESISTANT COATING.
3. COORDINATE LOCATIONS OF EQUIPMENT WITH OTHER TRADES. AND WITH STRUCTURAL AND ARCHITECTURAL ELEMENTS.
4. ALL EXHAUST FANS, SUPPLY FANS, DAMPERS, AND RELIEF VENTS SHALL BE MOUNTED 18" BELOW CEILING HEIGHT UNLESS SHOWN ON DRAWINGS. COORDINATE FINAL HEIGHT LOCATIONS WITH OWNER/RPR.
5. DUCT DIMENSIONS INDICATED ON THE DRAWINGS ARE NET AIRSIDE DIMENSIONS.
6. DUCTWORK SHALL BE FABRICATED OF FIBERGLASS (UNLESS NOTED OTHERWISE) AND INSTALLED IN ACCORDANCE WITH SMACNA STANDARDS. SEAL ALL DUCTS, JOINTS, AND SEAMS IN DUCTWORK TO INSURE AGAINST LEAKAGE.
7. PENETRATIONS OF THE WALLS AND FLOORS SHALL BE FLASHED WITH ALUMINUM SHEET ANGLES AND SEALED WITH INSULATING FOAM PER SMACNA ARCHITECTURAL SHEETMETAL DETAILS STANDARDS.
8. ELECTRIC MOTORS FOR EQUIPMENT SHALL BE TEFC, SELECTED FOR NON-OVERLOADING OPERATION. MOTORS SHALL NOT OPERATE IN THEIR SERVICE FACTOR.
9. GRILLES AND DIFFUSERS SHALL BE TITUS OR EQUAL ALUMINUM LAY IN GRILLES. RETURN REGISTER SHALL BE TITUS OR EQUAL ALUMINUM LOUVERED LAY IN.
10. LOW VOLTAGE CONTROL WIRING SHALL BE INSTALLED IN CONDUIT UNLESS ABOVE ACCESSIBLE CEILINGS. CONTROL WIRING ABOVE ACCESSIBLE CEILINGS SHALL BE SUPPORTED FROM CABLE SUPPORTS.

FAN SCHEDULE

GENERAL NOTES:		ABBREVIATIONS:	
(1) - HIGH EFFICIENCY MOTOR	(3) - UPBLAST DISCHARGE	PWE - POWER WALL EXHAUST FAN	SWSI - SINGLE WIDTH, SINGLE INLET
(2) - INCL. WEIGHT OF INERTIA BASE	(4) - TOP HORIZONTAL DISCHARGE	PRS - POWER ROOF SUPPLY FAN	DWDI - DOUBLE WIDTH, DOUBLE INLET

BVS - BELTED VENT SET	PRE - POWER ROOF EXHAUST FAN				
C.T. - CONTROL TRANSFORMER	E.P. - EMERGENCY POWER				
UNIT ACCESSORIES:					STARTER ACCESSORIES:
1 - INLET SCREEN	6 - MOTORIZED OUTLET DAMPERS	11 - SMOKE DETECTOR	16 - DISCHARGE MIN. 7'0" A.F.R.	21 - WEATHERPROOF HOUSING/TEFC	A - COMBINATION MAG-X-LINE
2 - MOTORIZED INLET VANES	7 - OUTLET GRAVITY DAMPERS	12 - 24" HIGH ROOF CURB	17 - U.L. 762 LISTED	22 - 2 SPEED, 2 WINDING MOTOR	B - AUTO. TRANSFORMER
3 - MOTORIZED INLET DAMPERS	8 - INERTIA BASE	13 - ACCESS DOOR & DRAIN	18 - EXPLOSION PROOF MOTOR	23 - 3ϕ DISC. SWITCH IN HOUSING	C - MANUAL MOTOR STARTER
4 - INLET GRAVITY DAMPERS	9 - SPRING ISOLATORS	14 - 2" WASHABLE FILTERS	19 - THERMAL OVERLOAD PROTECTION	24 - PRE-WIRED DISC. SWITCH	D - VFD WITH LINE REACTOR AND DISCONNECT
5 - OUTLET SCREEN	10 - BELT GUARD	15 - FAN SAFETY CAGE/WALL SLEEVE	20 - SOLID STATE SPEED CONTROLLER	25 - DOOR LIMIT SWITCH	E - HAND/OFF/AUTO SWITCH/PILOT LIGHT/120V XFMR

UNIT ID	SYSTEM	TYPE	MANUFACTURER	MODEL NO.	CFM	S.P.	MAX. SONES	ROOF/WALL OPENING	UNIT WEIGHT (LBS)	FAN ACCESSORIES	MOTOR (1)			STARTER				NOTES:
											MIN. H.P.	RPM	V/ϕ/Hz	LOCATION	TYPE	DISC. TYPE	ACCESSORIES	
EF-1,2	SCREEN ROOM	PRE	GREENHECK (OR EQUAL)	CUE-200-B	5427	0.64"	22	26.5" x 26.5"	238	1,4,5,18	2	1140	460/3/60					1,5
EF-3	SCREEN ROOM	PWE	GREENHECK (OR EQUAL)	CUE-200-B	5138	0.81"	22	26"X26"	186	1,4,5,18	2	1140	460/3/60					1,5
EF-4	STORAGE ROOM	PWE	GREENHECK (OR EQUAL)	CUE-200-B	5138	0.81"	22	26"X26"	186	1,4,5,18	2	1140	460/3/60					2,5
EF-5	ODOR CONTROL	PRE	GREENHECK (OR EQUAL)	CUE-099-A	807	0.9"	11	15.5"X15.5"	91	1,4,5,18	1/3	1725	115/60/1					3,5
EF-6	ATTIC SPACE	PRE	GREENHECK (OR EQUAL)	CUE-140-A	807	0.98"	17.1	18.5"X18.5"	143	1,4,5,18	1.5	1725	460/60/3					4,5

NOTE 1	EXHAUST FANS TO OPERATE FROM VARIABLE FREQUENCY DRIVES FOR SPEED CONTROL TO BALANCE FANS. HARD CODE VFD'S TO BALANCE FANS AT 4700 CFM EACH. REFER TO M2-1 FOR MOUNTING DETAILS.
NOTE 2	EXHAUST FAN TO OPERATE FROM VARIABLE FREQUENCY DRIVE FOR SPEED CONTROL TO BALANCE FAN. HARD CODE VFD TO BALANCE FAN AT 4100 CFM. REFER TO M2-1 FOR MOUNTING DETAILS.
NOTE 3	EXHAUST FAN TO OPERATE FROM VARIABLE FREQUENCY DRIVE FOR SPEED CONTROL TO BALANCE FAN. HARD CODE VFD TO BALANCE FAN AT 600 CFM. REFER TO M2-1 FOR MOUNTING DETAILS.
NOTE 4	EXHAUST FAN TO OPERATE FROM VARIABLE FREQUENCY DRIVE FOR SPEED CONTROL TO BALANCE FAN. HARD CODE VFD TO BALANCE FAN AT 2000 CFM. REFER TO M2-1 FOR MOUNTING DETAILS.
NOTE 5	ENTIRE UNIT INCLUDING FAN CURB SHALL BE COATED WITH LABCOAT COATING FOR CORROSION PROTECTION.

For Public Viewing Only - Not For Download

COMMONWEALTH ENGINEERS, INC.
A wealth of resources to master a common goal.
https://commonwealthengineers.com/

MICHAEL A. MIRANDE II
REGISTERED
No. 19800084
STATE OF INDIANA
PROFESSIONAL ENGINEER

Signature 10/03/25 Date

TOWN OF NEWBURGH
WARRICK COUNTY, INDIANA

WASTEWATER TREATMENT PLANT
FLOW EQ BASIN

© 2026 BY COMMONWEALTH ENGINEERS, INC. ALL RIGHTS RESERVED. REPRODUCTION OR USE OF THIS DRAWING IN WHOLE OR IN PART WITHOUT PERMISSION IS PROHIBITED

Indiana 811 Know what's below. 811 before you dig. 1-800-382-5544 (ITS THE LAW)

No.	Submittal / Revision	By	Date

Designed By:	Drawn By:	Checked By:
SD	CM	MAM
Issue Date: 10/03/25	Project No: S18005-041	Scale: AS SHOWN

MECHANICAL LEGENDS AND SCHEDULES

Drawing No: M0-0

Sheet: 134 OF 161

File: Z:\SHARED\IN CLIENTS M-Z\NEWBURGH\S18005 ON CALL SEWER ENG'S\CS\041 WWTP FLOW EQ BASIN\06 CAD\K MECH-ELECTNEWBURGH MECHANICAL.DWG
Saved: 10/2/2025 6:14:21 PM Plotted: 10/2/2025 6:16:42 PM Current User: Regan Wakefield, El LastSavedBy: rwakefield

ELECTRIC UNIT HEATER SCHEDULE

MARK	LOCATION	CONFIGURATION	AIRFLOW		FAN DATA					HEATER DATA						ELECTRICAL DATA			ACCESSORIES				MANUFACTURER WITH MODEL NUMBER	NOTES
			SUPPLY CFM		TYPE	VOLTAGE	RPM	FLA		KW	MBH	TEMP RISE	TYPE			FLA	VOLTS	PH	MOUNTING BRACKET	DISCONNECT SWITCH				
EUH-1,2,3	SCREEN ROOM	HORIZONTAL	1050		EXP	120/1/60	1725	3.8		12	40.9	37	EXP.			14.5	460	3	YES	NO			INDEECO 236-F01T-0121U-7329 (OR EQUAL)	1,2
EUH-4	STORAGE ROOM	HORIZONTAL	1050		EXP	120/1/60	1725	3.8		3	10.2	9	EXP.			3.7	460	3	YES	NO			INDEECO 236-F01T-0037U-7305 (OR EQUAL)	1,2

NOTES:

1. PROVIDE OPTION T, THERMOSTAT FACTORY INSTALLED AND PREWIRED TO THE CONTROL ENCLOSURE. 50 TO 90 DEGREES F. SET AT 50 F.
2. UNIT HEATER FAN MOTOR REQUIRES 120/1/60 CIRCUIT.

GAS FIRED MAKE UP AIR UNIT SCHEDULE

MARK	LOCATION	CONFIGURATION	AIRFLOW		FAN DATA					BURNER DATA						ELECTRICAL DATA			ACCESSORIES		FILTER DATA		MANUFACTURER WITH MODEL NUMBER	NOTES
			SUPPLY CFM	MIN OA	TYPE	ESP	RPM	BHP	HP	FUEL TYPE	INLET PRESS.	TRAIN SIZE	INPUT MBH	MIN EAT	TEMP RISE	MCA	VOLTS	PH	ROOF CURB	DISCONNECT SWITCH	TYPE	EFF		
MAU-1	SCREENINGS BLDG.	HORIZONTAL	16000	100%	FC	2.03"		15	15.0	NAT GAS	14"	1.25"	1056	0	60	30	460	3	YES	YES	2" PLEATED	MERV8	ENGINEERED AIR HE171/0/MV (OR EQUAL)	1,2,3

NOTES:

1. PROVIDE UNIT MOUNTED VFD, EXPLOSION PROOF MOTORIZED DISCHARGE DAMPER, REMOTE CONTROL PANEL, AIRFLOW SWITCH, LOW AND HIGH DISCHARGE TEMPERATURE SWITCHES, HIGH AND LOW GAS PRESSURE SWITCHES, HE750 409SS HEAT EXCHANGER, 20:1 MODULATING BURNER.
2. MOTOR SHALL BE EXPLOSION PROOF, CLASS 1, DIVISION 1. GFI OUTLET, 15 AMP 120/1/60 POWERED BY OTHERS. PRESSURE BUILDING CONTROLS WITH MANUAL OVERRIDE.
3. ALL COMPONENTS EXPOSED TO ROOM SHALL SHALL HAVE A FINISH COAT OF TWO COMPONENT EPOXY WITH POLYURETHANE TOP COAT TO ALL EXPOSED SURFACES WITH ASTM B117-11 SALT SPRAY RATING OF 2500 HOURS.

For Public Viewing Only-Not For Downloading

COMMONWEALTH ENGINEERS, INC.
A wealth of resources to master a common goal.
https://commonwealthengineers.com/

MICHAEL A. MIRANDE, II
REGISTERED
No. 19800084
STATE OF INDIANA
PROFESSIONAL ENGINEER

Signature 10/03/25 Date

TOWN OF NEWBURGH
WARRICK COUNTY, INDIANA

WASTEWATER TREATMENT PLANT
FLOW EQ BASIN

© 2025 BY COMMONWEALTH ENGINEERS, INC. ALL RIGHTS RESERVED. REPRODUCTION BY ANY METHOD, IN WHOLE OR IN PART WITHOUT PERMISSION IS PROHIBITED

Indiana 811 Know what's below. 811 before you dig. 1-800-382-5544 (ITS THE LAW)

No.	Submittal / Revision	By	Date

Designed By:	Drawn By:	Checked By:
SD	CM	MAM
Issue Date: 10/03/25	Project No: S18005-041	Scale: AS SHOWN

MECHANICAL LEGENDS AND SCHEDULES

Drawing No: M1-0

Sheet: 135 OF 161

File: Z:\SHARED\IN CLIENTS M-Z\NEWBURGH\S18005 ON CALL SEWER ENG S\VC\S041 WWTP FLOW EQ BASIN\06 CAD\M-MECH-ELECT\NEWBURGH MECHANICAL.DWG
Saved: 10/2/2025 6:14:21 PM Plotted: 10/2/2025 6:16:44 PM Current User: Regan Wakefield, EI LastSavedBy: rwakefield

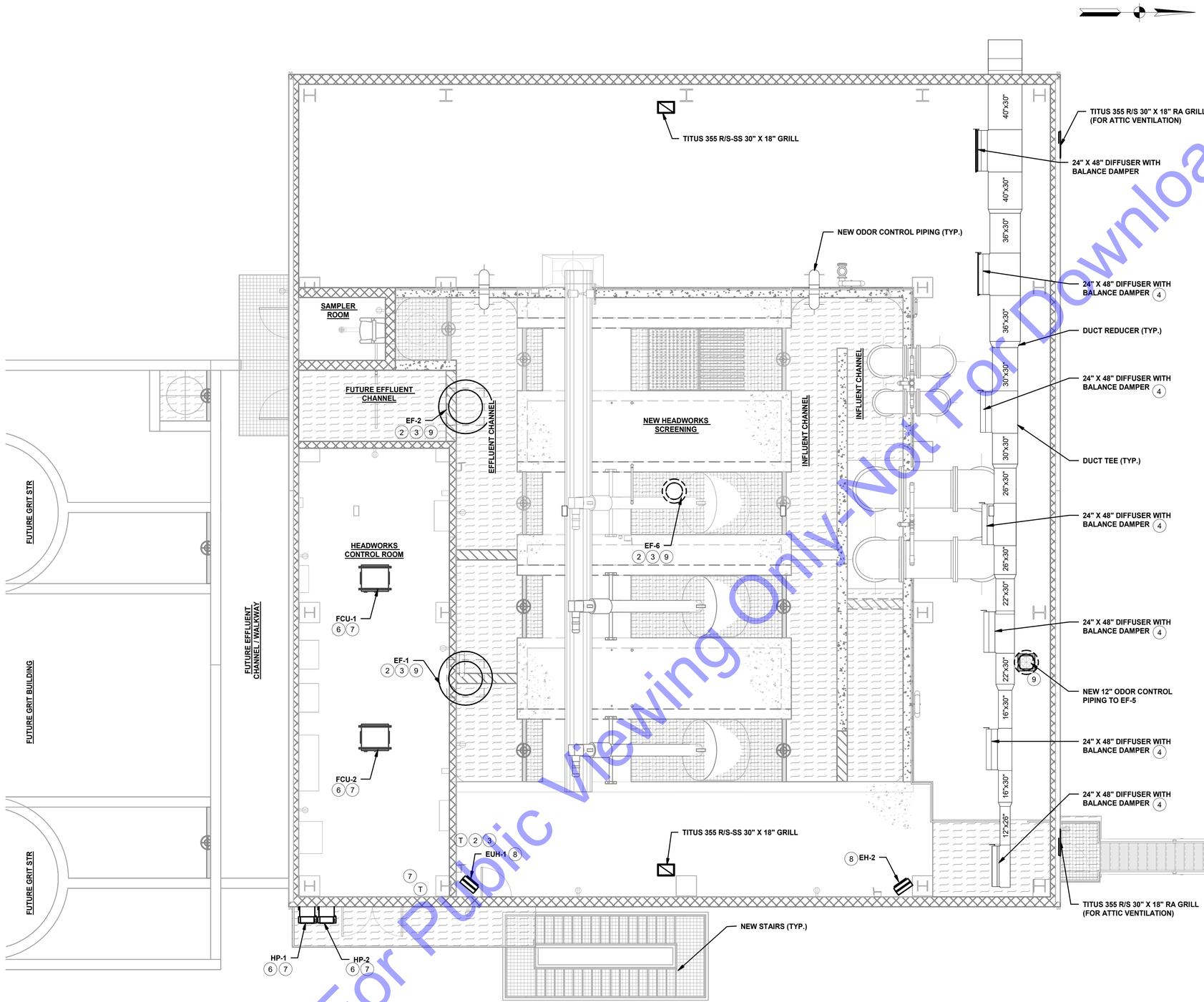

NEW HEADWORKS UPPER MECHANICAL PLAN

SCALE: 3/16" = 1'-0"

0' 4' 8' 12'

SHEET NOTES:

1. CONTRACTOR SHALL EXAMINE NOT ONLY PLANS AND SPECIFICATIONS FOR ELECTRICAL INSTRUMENTATION, BUT ALSO PLANS AND SPECIFICATIONS FOR OTHER RELATED SECTIONS. VISIT THE SITE TO BECOME ACQUAINTED WITH ALL PROJECT CONDITIONS INCLUDING EXISTING CONDITIONS. EXECUTION OF CONTRACT IS EVIDENCE THAT THE CONTRACTOR HAS EXAMINED ALL DRAWINGS AND SPECIFICATION AND THAT ALL CONDITIONS OF INSTALLING THE WORK IN THIS SECTION ARE VERIFIED. LATE CLAIMS FOR LABOR AND MATERIALS REQUIRED DUE TO DIFFICULTLY ENCOUNTERED, WHICH COULD HAVE BEEN FORESEEN HAD EXAMINATIONS BEEN MADE, WILL NOT BE RECOGNIZED.
2. ALL ELECTRICAL EQUIPMENT TO BE INSTALLED WITHIN THE SCREEN ROOM SHALL BE CLASS 1 DIVISION 1, INCLUDING CONDUIT SEAL OFFS.
3. DUCTWORK FOR MAKE UP AIR UNIT AND EXHAUST FANS SHALL BE FPR

PLAN NOTES:

1. THE CONTRACTOR SHALL FURNISH AND INSTALL NEW MAKE UP AIR UNIT (MAU-1) AND DUCTWORK ON NEW CONCRETE PADS. INSTALL UNITS PER MANUFACTURERS INSTRUCTIONS. MAU-1 SHALL BE ENGINEERS AIR (NO EXCEPTIONS). REFER TO MECHANICAL SCHEDULES FOR MAKE UP AIR UNIT SPECIFICATIONS. THE CONTRACTOR SHALL FURNISH AND INSTALL DUCTWORK AS SHOWN ON MECHANICAL DRAWINGS. INSTALL DUCTWORK 2' BELOW CEILING TO TOP OF DUCTWORK.
2. THE CONTRACTOR SHALL FURNISH AND INSTALL EXPLOSION PROOF SCREEN ROOM EXHAUST FANS (EF-1,2,3,4,5,6). EXHAUST FANS SHALL BE GREENHECK CUE-200 (OR EQUAL). EF-3,4,5 LOCATIONS ARE SHOWN ON MECHANICAL DRAWING M1-3. REFER TO MECHANICAL SCHEDULES FOR EXHAUST FAN SPECIFICATIONS. EXHAUST FANS SHALL BE INTERLOCKED TO OPERATE WHEN MAKE UP AIR UNIT (MAU-1) IS IN OPERATION. MOUNT EXHAUST FANS 12' AFF.
3. THE CONTRACTOR SHALL FURNISH AND INSTALL EXPLOSION PROOF THERMOSTAT. UPON A RISE IN ROOM TEMPERATURE ABOVE AN OPERATOR ADJUSTABLE SET POINT, INTAKE DAMPERS SHALL OPEN 90% AND EXHAUST FANS (EF-1,2,3,6) SHALL START. THERMOSTAT INSTALLATION SHALL INCLUDE AN EXPLOSION PROOF AUTO/ON SWITCH TO START EXHAUST FANS IN MANUAL OPERATION. EXHAUST FANS AND INTAKE DAMPERS SHALL ALSO BE INTERLOCKED WITH COMBUSTIBLE GAS DETECTION PANEL TO OPEN INTAKE DAMPERS AND START EXHAUST FANS WHEN LEL, H2S AND 02 LEVELS REACH ALARM SET POINTS. INTAKE DAMPERS DA-1 AND DA-2 ARE SHOWN ON MECHANICAL DRAWING M1-3.
4. THE CONTRACTOR SHALL FURNISH AND INSTALL 24" X 48", 2400 CFM ALUMINUM DIFFUSERS WITH BALANCING DAMPERS TITUS (OR EQUAL)
5. THE CONTRACTORS SHALL FURNISH AND INSTALL 2 PSI GAS PIPING FROM METER BASE TO MAKE UP AIR UNIT (MAU-1). GAS PIPING SHALL BE INSTALLED UNDERGROUND IN POLYETHYLENE TUBING. POLYETHYLENE INSTALLATION SHALL BE IN ACCORDANCE WITH NATIONAL, STATE AND LOCAL CODES AND CONFORMING TO ASTM D2774 STANDARD PRACTICE OF UNDERGROUND THERMOPLASTIC PRESSURE PIPING. PIPING SHALL BE PRESSURE TESTED PER NATIONAL FUEL GAS CODE NFPA 54. THE CONTRACTOR SHALL FURNISH AND INSTALL PRESSURE REDUCING VALVE AT MAU-1 SIZED FOR THE MAXIMUM HEATING CAPACITY OF THE MAKE UP AIR UNIT.
6. THE CONTRACTOR SHALL FURNISH AND INSTALL FAN COIL AND HEAT PUMP SYSTEM. MOUNT FAN COIL (FCU-1 & 2) ON CEILING WHERE SHOWN AND HEAT PUMP (HP-1 & 2) AT CATWALK. FURNISH AND INSTALL FACTORY REFRIGERANT LINES. PIPE DRAIN THOROUGH CONTROL ROOM TO INFLUENT CHANNEL IN SCREEN ROOM. DRAIN LINE SHALL BE 1/2" SCHEDULE 40 PVC. REFER TO MECHANICAL SCHEDULES FOR FAN COIL AND HEAT PUMP SPECIFICATIONS.
7. THE CONTRACTOR SHALL FURNISH AND INSTALL (2) TWO LOCKABLE HEAT/COOL THERMOSTATS HONEYWELL (OR EQUAL) WITH AUTOMATIC SWITCHOVER BETWEEN HEATING AND COOLING. SET POINT FOR THERMOSTAT 2 SHALL BE SET 2 DEGREES LOWER FOR HEATING AND 2 DEGREES HIGHER FOR COOLING THAN THERMOSTAT 1. OPERATION FROM TWO THERMOSTATS IS TO PROVIDE REDUNDANCY FOR ELECTRICAL ROOM HVAC.
8. THE CONTRACTOR SHALL FURNISH AND INSTALL EXPLOSION PROOF ELECTRIC UNIT HEATINGS (EUH-1,2,3,4). ELECTRIC UNIT HEATERS SHALL BE INDEECO (OR EQUAL). EUH-3,4 LOCATION IS SHOWN ON MECHANICAL DRAWING M1-3. MOUNT ELECTRIC UNIT HEATERS 12" AFF.
9. EF-1, 2, 5, 6, LOCATIONS ARE ON THE ROOF OF THE HEADWORKS BUILDING AND ARE ONLY SHOWN IN THIS PLAN VIEW FOR REFERENCE. SEE DWG M2-1 FOR FURTHER DETAILS.

For Public Viewing Only-Not For Downloading

COMMONWEALTH ENGINEERS, INC.
A wealth of resources to master a common goal
https://commonwealthengineers.com/
OFFICE LOCATIONS IN:
INDIANAPOLIS, IN (2)
EVANSVILLE, IN
FORT WAYNE, IN
CROWN POINT, IN
BOWLING GREEN, KY
SOUTH BEND, IN

MICHAEL A. MIRAMONTE II
REGISTERED
No. 19800084
STATE OF INDIANA
PROFESSIONAL ENGINEER

Signature 10/03/2025 Date

TOWN OF NEWBURGH
WARRICK COUNTY, INDIANA

WASTEWATER TREATMENT PLANT FLOW EQ BASIN

© 2024 BY COMMONWEALTH ENGINEERS, INC. ALL RIGHTS RESERVED. REPRODUCTION BY ANY METHOD IN WHOLE OR IN PART WITHOUT PERMISSION IS PROHIBITED

Indiana 811 Know what's below. Call before you dig. 1-800-382-5544 (ITS THE LAW)

No.	Submittal / Revision	By	Date

Designed By:	Drawn By:	Checked By:
RJN	ANR	MM
Issue Date: 10/03/25	Project No: S18005-41	Scale: AS SHOWN

NEW HEADWORKS UPPER MECHANICAL PLAN

Drawing No: **M1-1**

Sheet: 136 OF 161

Saved: 10/1/2025 5:11:30 PM Current Local File: Autodesk Docs://Newburgh New WWTP EQ and Headworks/Newburgh Headworks V 23.rvt

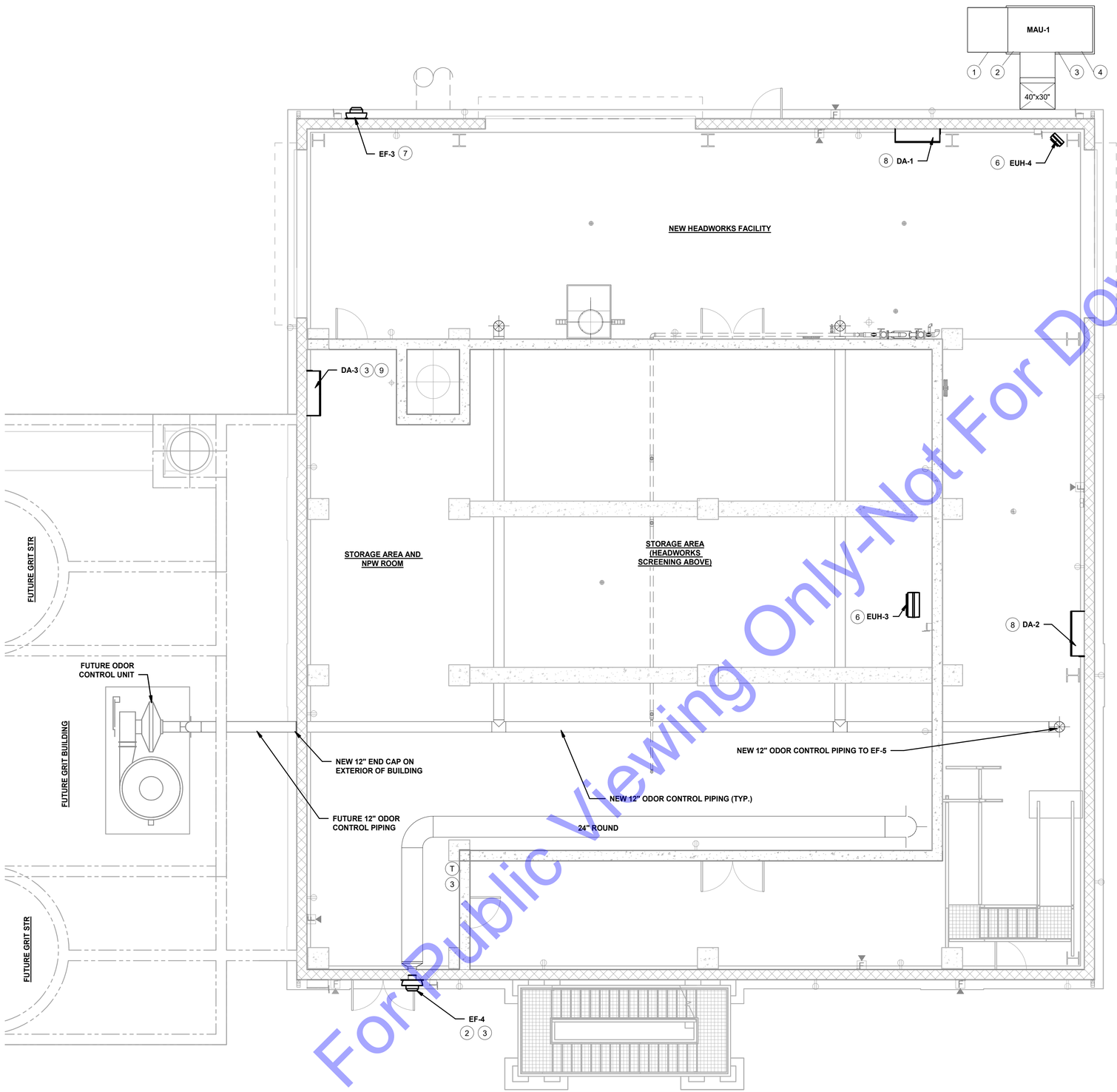

NEW HEADWORKS LOWER MECHANICAL VIEW

SCALE: 3/16" = 1'-0"

0' 4' 8' 12'

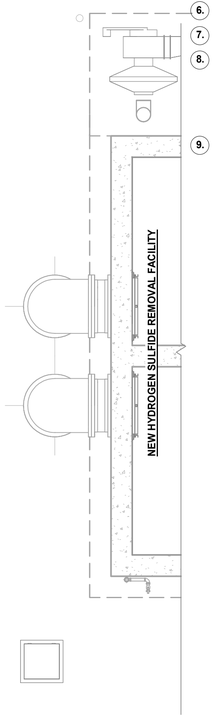

SHEET NOTES:

1. CONTRACTOR SHALL EXAMINE NOT ONLY PLANS AND SPECIFICATIONS FOR ELECTRICAL INSTRUMENTATION, BUT ALSO PLANS AND SPECIFICATIONS FOR OTHER RELATED SECTIONS. VISIT THE SITE TO BECOME ACQUAINTED WITH ALL PROJECT CONDITIONS INCLUDING EXISTING CONDITIONS. EXECUTION OF CONTRACT IS EVIDENCE THAT THE CONTRACTOR HAS EXAMINED ALL DRAWINGS AND SPECIFICATION AND THAT ALL CONDITIONS OF INSTALLING THE WORK IN THIS SECTION ARE VERIFIED. LATE CLAIMS FOR LABOR AND MATERIALS REQUIRED DUE TO DIFFICULTLY ENCOUNTERED, WHICH COULD HAVE BEEN FORESEEN HAD EXAMINATIONS BEEN MADE, WILL NOT BE RECOGNIZED.
2. ALL ELECTRICAL EQUIPMENT TO BE INSTALLED WITHIN THE SCREEN ROOM SHALL BE CLASS 1 DIVISION 1, INCLUDING CONDUIT SEAL OFFS.

PLAN NOTES:

1. THE CONTRACTOR SHALL FURNISH AND INSTALL NEW MAKE UP AIR UNIT (MAU-1) AND DUCTWORK ON NEW CONCRETE PADS. INSTALL UNITS PER MANUFACTURERS INSTRUCTIONS. MAU-1 SHALL BE ENGINEERS AIR (NO EXCEPTIONS). REFER TO MECHANICAL SCHEDULES FOR MAKE UP AIR UNIT SPECIFICATIONS. THE CONTRACTOR SHALL FURNISH AND INSTALL DUCTWORK AS SHOWN ON MECHANICAL DRAWINGS. INSTALL DUCTWORK 2' BELOW CEILING TO TOP OF DUCTWORK.
2. THE CONTRACTOR SHALL FURNISH AND INSTALL EXPLOSION PROOF SCREEN ROOM EXHAUST FANS (EF-4,5). EXHAUST FANS SHALL BE GREENHECK CUE-200 (OR EQUAL). REFER TO MECHANICAL SCHEDULES FOR EXHAUST FAN SPECIFICATIONS. EXHAUST FANS SHALL BE INTERLOCKED TO OPERATE WHEN MAKE UP AIR UNIT (MAU-1) IS IN OPERATION. MOUNT EXHAUST FANS 12' AFF.
3. THE CONTRACTOR SHALL FURNISH AND INSTALL EXPLOSION PROOF THERMOSTAT. UPON A RISE IN ROOM TEMPERATURE ABOVE AN OPERATOR ADJUSTABLE SET POINT, INTAKE DAMPERS SHALL OPEN 90% AND EXHAUST FANS (EF-4) SHALL START. THERMOSTAT INSTALLATION SHALL INCLUDE AN EXPLOSION PROOF AUTO/ON SWITCH TO START EXHAUST FANS IN MANUAL OPERATION. EXHAUST FANS AND INTAKE DAMPERS SHALL ALSO BE INTERLOCKED WITH COMBUSTIBLE GAS DETECTION PANEL TO OPEN INTAKE DAMPERS AND START EXHAUST FANS WHEN LEL, H2S AND 02 LEVELS REACH ALARM SET POINTS.
4. THE CONTRACTORS SHALL FURNISH AND INSTALL 2 PSI GAS PIPING FROM METER BASE TO MAKE UP AIR UNIT (MAU-1). GAS PIPING SHALL BE INSTALLED UNDERGROUND IN POLYETHYLENE TUBING. POLYETHYLENE INSTALLATION SHALL BE IN ACCORDANCE WITH NATIONAL, STATE AND LOCAL CODES AND CONFORMING TO ASTM D2774 STANDARD PRACTICE OF UNDERGROUND THERMOPLASTIC PRESSURE PIPING. PIPING SHALL BE PRESSURE TESTED PER NATIONAL FUEL GAS CODE NFPA 54. THE CONTRACTOR SHALL FURNISH AND INSTALL PRESSURE REDUCING VALVE AT MAU-1 SIZED FOR THE MAXIMUM HEATING CAPACITY OF THE MAKE UP AIR UNIT.
5. EF-5 IS TEMPORARY ODOR CONTROL FAN. EF-5 SHALL OPERATE 24/7
6. REFER TO NOTE 8 ON MECHANICAL DRAWING M1-2
7. REFER TO NOTES 2 AND 3 ON MECHANICAL DRAWING M1-2
8. THE CONTRACTOR SHALL FURNISH AND INSTALL GREENHECK (OR EQUAL) EAD-632W-60 X 48 EXPLOSION PROOF MOTORIZED INTAKE DAMPERS/LOUVERS. MOTOR OPERATORS SHALL BE BELIMO (OR EQUAL). REFER TO NOTE 3 MECHANICAL DRAWINGS M1-2 FOR OPERATIONAL SEQUENCE.
9. THE CONTRACTOR SHALL FURNISH AND INSTALL GREENHECK (OR EQUAL) EAD-63-44 X 36 EXPLOSION PROOF MOTORIZED INTAKE DAMPER/LOUVER. MOTOR OPERATOR SHALL BE BELIMO (OR EQUAL).

For Public Viewing Only-Not For Downloading

COMMONWEALTH ENGINEERS, INC.
A wealth of resources to master a worthy goal
https://commonwealthengineers.com/
OFFICE LOCATIONS IN:
INDIANAPOLIS, IN (2)
EVANSVILLE, IN
FORT WAYNE, IN
CROWN POINT, IN
BOWLING GREEN, KY
SOUTH BEND, IN

MICHAEL A. MIRAMONTE II
REGISTERED
No. 19800084
STATE OF INDIANA
PROFESSIONAL ENGINEER

Signature 10/03/2025 Date

TOWN OF NEWBURGH
WARRICK COUNTY, INDIANA

WASTEWATER TREATMENT
PLANT FLOW EQ BASIN

© 2024 BY COMMONWEALTH ENGINEERS, INC. ALL RIGHTS RESERVED. REPRODUCTION BY ANY METHOD IN WHOLE OR IN PART WITHOUT PERMISSION IS PROHIBITED

Indiana 811 Know what's below. Call before you dig. 1-800-382-5544 (1TS THE LAW)

No.	Submittal / Revision	By	Date

Designed By:	Drawn By:	Checked By:
RJN	ANR	MM
Issue Date: 10/03/25	Project No: S18005-41	Scale: AS SHOWN

NEW HEADWORKS LOWER MECHANICAL PLAN

Drawing No: **M1-2**

Sheet: 137 OF 161

Saved: 10/1/2025 5:11:30 PM Current Local File: Autodesk Docs://Newburgh New WWTP EQ and Headworks/Newburgh Headworks V 23.rvt

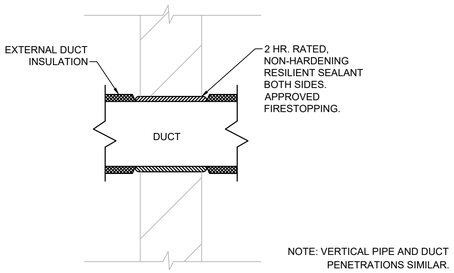

NOTE: VERTICAL PIPE AND DUCT PENETRATIONS SIMILAR.

DUCT & PIPE RATED WALL PENETRATION DETAIL

NOT TO SCALE

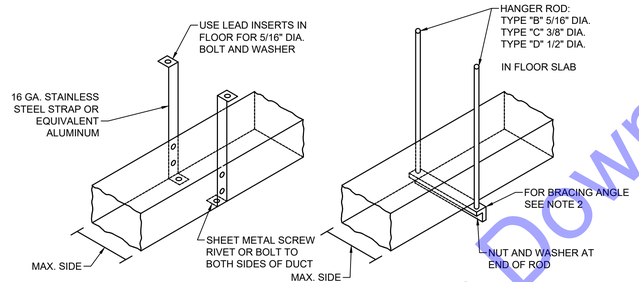

TYPE "A"
(8 FT. MAX. HANGER SPACING)
ALSO PROVIDE 3 HANGERS AT EACH TAKE-OFF OR BRANCH

TYPE "B" "C" & "D"
(8 FT. MAX. HANGER SPACING)

DUCT SCHEDULE	
DUCT DIMENSIONS (INCHES)	TYPE HANGER
UP THRU 12	A
13 THRU 18	A
19 THRU 30	A/B
31 THRU 42	B
43 THRU 54	B
55 THRU 60	B
61 THRU 84	C

DUCT HANGERS DETAIL

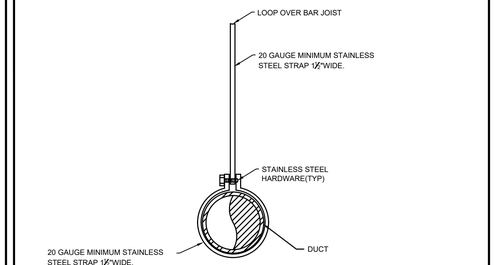

NOTES:
1. INSTALL PLUMB.

ROUND FIBERGLASS DUCT HANGING DETAIL

NOT TO SCALE

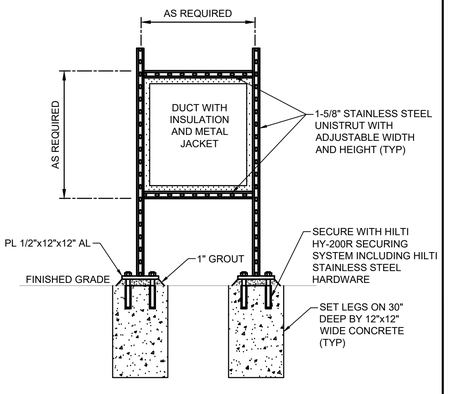

EXTERIOR HORIZONTAL RECT DUCT SUPPORT DETAIL

NOT TO SCALE

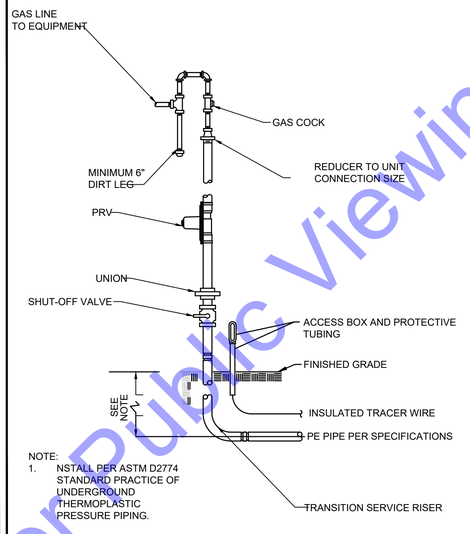

NOTE:
1. NSTALL PER ASTM D2774 STANDARD PRACTICE OF UNDERGROUND THERMOPLASTIC PRESSURE PIPING.

GAS PIPING DETAIL

NOT TO SCALE

FIGURE 1 - SUGGESTED SIZING

DUCT SIZE	BAND
18"x12"	1 1/2"x16 GA
24"x20"	1"x1/8"

FIGURE 2 - SUGGESTED SIZING

DUCT SIZE	ANGLE
30"x12"	1"x1"x1/8"
36"x18"	1"x1"x1/8"
42"x24"	1 1/4"x1 1/4"x1/8"
42"x30"	1 1/4"x1 1/4"x1/8"

FASTENER TABLE

DUCT GAGE	ALLOWABLE LOAD PER FASTENER*
28, 26	25 LB
24, 22, 20	35 LB
18, 16	50 LB

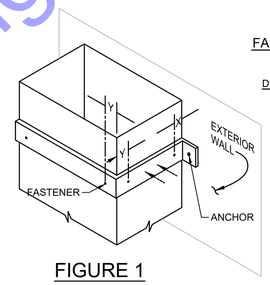

FIGURE 1

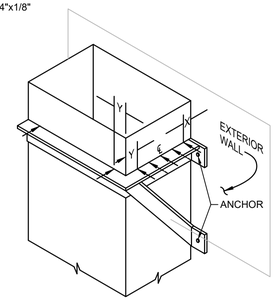

FIGURE 2

---------- SHOWS SUPPLEMENTAL FASTENER LOCATIONS

NOTES:
1. BRACKETS ARE SIZED FOR 12 FEET OF DUCT, MAXIMUM.
2. LOCATE DUCTS AGAINST WALL OR MAXIMUM OF 2" AWAY FROM WALL.
3. EACH WALL ANCHOR SHALL SATISFY THE FLOLLOWING CRITERIA UNLESS OTHER ANALYSIS IS MADE:
   A. TENSILE LOAD = 3/8 x DUCT WEIGHT; SAFETY FACTOR 4.
   B. SHEAR LOAD x 1/2 x DUCT WEIGHT; SAFETY FACTOR 4.

DUCT SUPPORT FROM WALL DETAIL

NOT TO SCALE

For Public Viewing Only-Not For Downloading

COMMONWEALTH ENGINEERS, INC.
A wealth of resources to master a common goal.
https://commonwealthengineers.com/

MICHAEL A. MIRANDE II
REGISTERED
No. 19800084
STATE OF INDIANA
PROFESSIONAL ENGINEER

Signature 10/03/25 Date

TOWN OF NEWBURGH
WARRICK COUNTY, INDIANA

WASTEWATER TREATMENT PLANT
FLOW EQ BASIN

© 2025 BY COMMONWEALTH ENGINEERS, INC. ALL RIGHTS RESERVED. REPRODUCTION BY ANY METHOD, IN WHOLE OR IN PART WITHOUT PERMISSION IS PROHIBITED

Indiana 811 Know what's below. 811 before you dig. 1-800-382-5544 (ITS THE LAW)

No.	Submittal / Revision	By	Date

Designed By:	Drawn By:	Checked By:
SD	CM	MAM
Issue Date: 10/03/25	Project No: S18005-041	Scale: AS SHOWN

MECHANICAL DETAILS

Drawing No: M2-0

Sheet: 138 OF 161

File: Z:\SHARED\IN CLIENTS M-Z\NEWBURGH\S18005 ON CALL SEWER ENG S\VC\S041 WWTP FLOW EQ BASIN\06 CADM MECH-ELECT\NEWBURGH MECHANICAL.DWG
Saved: 10/2/2025 6:14:21 PM Plotted: 10/2/2025 6:16:47 PM Current User: Regan Wakefield, EI LastSavedBy: rwakefield

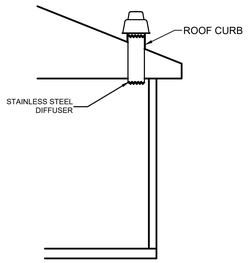

EF-1 & 2 ROOF MOUNT EXHAUST FANS

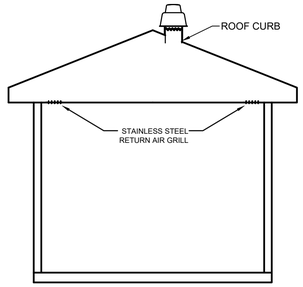

EF-6 ROOF MOUNT EXHAUST FAN

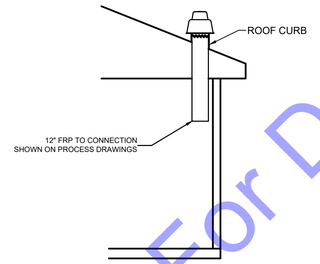

EF-5 ROOF MOUNT EXHAUST FAN

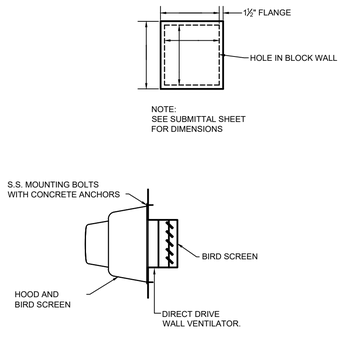

WALL FAN INSTALLATION DETAIL (EF & SF)

NOT TO SCALE

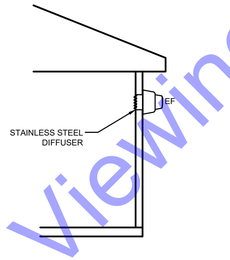

EF-3 & 4 WALL MOUNT EXHAUST FAN

NOT TO SCALE

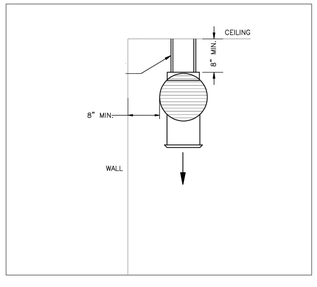

CEILING MOUNTED WASH DOWN HEATER

NOT TO SCALE

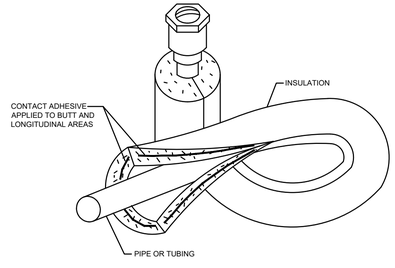

NOTES:

1. LONGITUDINAL JOINTS ON HORIZONTAL PIPE TO BE ON BOTTOM (SHOWN ON SIDE FOR EASE OF ILLUSTRATION).

ELASTOMERIC TUBING INSULATION

CAD ID: 07M103

NOT TO SCALE

For Public Viewing Only-Not For Downloading

COMMONWEALTH ENGINEERS, INC.
A wealth of resources to master a common goal.
https://commonwealthengineers.com/

MICHAEL A. MIRANDE II
REGISTERED
No. 19800084
STATE OF INDIANA
PROFESSIONAL ENGINEER

Signature 10/03/25 Date

TOWN OF NEWBURGH
WARRICK COUNTY, INDIANA

WASTEWATER TREATMENT PLANT
FLOW EQ BASIN

© 2025 BY COMMONWEALTH ENGINEERS, INC. ALL RIGHTS RESERVED. REPRODUCTION BY ANY METHOD, IN WHOLE OR IN PART WITHOUT PERMISSION IS PROHIBITED

Indiana811 Know what's below. 811 before you dig. 1-800-382-5544 (ITS THE LAW)

No.	Submittal / Revision	By	Date

Designed By:	Drawn By:	Checked By:
SD	CM	MAM
Issue Date: 10/03/25	Project No: S18005-041	Scale: AS SHOWN

MECHANICAL DETAILS

Drawing No: M2-1

Sheet: 139 OF 161

File: Z:\SHARED\IN CLIENTS M-Z\NEWBURGH\S18005 ON CALL SEWER ENG SVCS\041 WWTP FLOW EQ BASIN\06 CAD\K MECH-ELEC\TNEWBURGH MECHANICAL.DWG
Saved: 10/2/2025 6:14:21 PM Plotted: 10/2/2025 6:16:54 PM Current User: Regan Wakefield, EI LastSavedBy: rwakefield

PROCESS AND INSTRUMENTATION DIAGRAM LEGEND

INSTRUMENT TAG IDENTIFICATION

COMPONENT DESIGNATOR

AREA 035D: BUILDING OR PROCESS AREA NUMBER

TAG TYPE P: FIRST LETTER, SEE ISA TABLE BELOW
AH: SUCCEEDING LETTERS, SEE ISA TABLE BELOW

TAG NUMBER 1: P&ID NUMBER
3: LOOP NUMBER
4: EQUIPMENT NUMBER
A: DEVICE LETTER IF MULTIPLE DEVICES

TAG FUNCTION HOA: TAG FUNCTION ABBREVIATION, SEE LISTING AT RIGHT

(QUANTITY) (2): TOTAL NUMBER OF DEVICES WHERE MORE THAN ONE DEVICE IS REQUIRED. DEVICE NUMBERS ARE SEQUENTIAL BEGINNING WITH THE TAG NUMBER SHOWN. IF QUANTITY IS NOT SHOWN, THEN ONE DEVICE ONLY IS REQUIRED.

COMPONENT DESIGNATOR SEE LISTING AT RIGHT

PLC POINT TYPE

ANALOG INPUT	
ANALOG OUTPUT	
DISCRETE INPUT	
DISCRETE OUTPUT	
NETWORK CONNECTION	

TAG FUNCTION ABBREVIATIONS

ALT ALTERNATE
C CLOSED(C)
CM COMPUTER-MANUAL
DIFF DIFFERENCE OR DIFFERENTIAL
DO DISSOLVED OXYGEN
F FAIL
F(X) CHARACTERIZED
FOR FOWARD-STOP(OFF)-REVERSE(MAINTAINED CONTACT)
FSR FOWARD-STOP-REVERSE(MOMENTARY CONTACT)
HOA HAND-OFF-AUTOMATIC(MAINTAINED CONTACT)
HOR HAND-OFF-REMOTE(MAINTAINED CONTACT)
I CURRENT TO CURRENT
IP CURRENT TO PNEUMATIC
LL LEAD-LAG(MAINTAINED CONTACT)
LOE LOSS OF ECHO(ULTRASONIC SENSOR FAILURE)
LOR LOCAL-OFF-REMOTE(MAINTAINED CONTACT)
LOS LOCKOUT STOP(LOCKABLE IN "STOP" POSITION MOMENTARY CONTACT)
LR LOCAL/REMOTE(MAINTAINED CONTACT)
MA MANUAL-AUTOMATIC(MAINTAINED CONTACT)
MOA MANUAL-OFF-AUTOMATIC(MAINTAINED CONTACT)

O OPEN
OA OFF-AUTOMATIC
OCA OPEN-CLOSE-AUTOMATIC(MAINTAINED CONTACT)
OC OPEN-CLOSE(D)(MAINTAINED CONTACT)
OSC OPEN-STOP-CLOSE(MOMENTARY CONTACT SPRING RETURN TO CENTER POSITION)
00 ON-OFF(MAINTAINED CONTACT)
OOA ON-OFF-AUTOMATIC(MAINTAINED CONTACT)
OOR ON-OFF-REMOTE(MAINTAINED CONTACT)
R RUN
SBL SLUDGE BLANKET INTERFACE LEVEL
SP SPEED POT
SQRT SQUARE ROOT
SS START-STOP
SSA START-STOP-AUTOMATIC
SSL START-STOP-LOCK (LOCKABLE IN "STOP" POSITION. MOMENTARY CONTACT)
SUM SUMMMATION
VIB VIBRATION
X MULTIPLY

FWD FOWARD
REV REVERSE
F/R FOWARD/REVERSE(MOTOR STARTER COILS)
ESTP ESTOP(EMERGENCY STOP)
SPD (SPEED POT)
SUSP SUSPEND
ALRT ALERT
RSET RESET
STRT START

TAG SYMBOLS

HORIZONTAL BAR SYMBOLS FOR PHYSICAL MOUNTING OF DEVICE

SINGLE FUNCTION SINGLE/MULTI I/O DEVICE NON-CONFIGURABLE NON-PROGRAMMABLE

MULTI FUNCTION MULTI I/O PROGRAMMABLE DEVICE

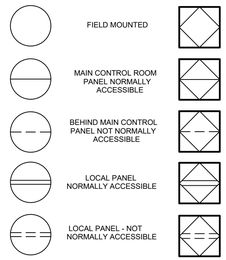

CONTROL AND I/O DEVICES DISPLAY

[ADD APPROPRIATE HORZ. BAR(S)]

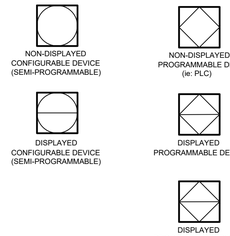

INSTRUMENT SOCIETY OF AMERICA TABLE

LETTER	FIRST LETTER(S)		SUCCEEDING LETTER(S)		
	PROCESS OR INITIATING VARIABLE	MODIFIER	READOUT OR PASSIVE FUNCTION	OUTPUT FUNCTION	MODIFIER
A	ANALYSIS		ALARM(W LOGGING)	ANNUNCIATE	
B	BURNER COMBUSTION		USERS CHOICE(*)	USERS CHOICE(*)	USERS CHOICE(*)
C	USERS CHOICE(*)			CONTROL	CLOSE
D	USERS CHOICE(*)	DIFFERENTIAL			
E	VOLTAGE		PRIMARY ELEMENT		
F	FLOW RATE	RATIO			FEEDBACK
G	USERS CHOICE(*)		GLASS		
H	HAND (MANUAL)				HIGH
I	CURRENT		INDICATE		
J	POWER	SCAN			
K	TIME OR SCHEDULE	TIME RATE OF CHANGE	KEYPAD(DATA ENTRY)	CONTROL STATION	
L	LEVEL		LIGHT(PILOT)		LOW
M	MOTOR	MOMENTARY			MONITORING
N	USERS CHOICE(*)		USERS CHOICE(*)	USERS CHOICE(*)	USERS CHOICE(*)
O	USERS CHOICE(*)		ORIFICE		
P	PRESSURE OR VACUUM		POINT TEST CONNECTION		
Q	QUANTITY	INTEGRATE			
R	RADIATION		RECORD, TREND, LOG		
S	SPEED OR FREQUENCY	SAFETY		SWITCH	
T	TEMPERATURE			TRANSMIT	
U	UNIVERSAL/MULTIVARIABLE(*)		MULTIFUNCTION(*)	MULTIFUNCTION(*)	MULTIFUNCTION(*)
V	VIBRATION		VALUE	VALVE	
W	WEIGHT, FORCE, TORQUE		WELL	W	
X	UNCLASSIFIED(*)	X AXIS	UNCLASSIFIED(*)	UNCLASSIFIED(*)	UNCLASSIFIED(*)
Y	EVENT, STATE	Y AXIS		RELAY OR COMPUTE(*)	
Z	POSITION, DIMENSION	Z AXIS		DRIVE, ACTUATE OR UNCLASSIFIED FINAL CONTROL ELEMENT	

(*) WHEN USED, EXPLANATION IS SHOWN ADJACENT TO INSTRUMENT SYMBOL

SPECIAL CASES:
ETM - ELAPSED TIME METER
JBX - JUNCTION BOX
NDX - INDEX #
MS - MOTOR STARTER
MOR - MOTOR OVERLOAD RELAY
MPR - MOTOR PROTECTION RELAY

CONDUIT NOTES

PVC SCHEDULE 40 BELOW GRADE.

RIGID ALUMINUM CONDUIT ABOVE GRADE OUTDOORS.

RIGID ALUMINUM CONDUIT IN CLASSIFIED AND CORROSIVE SPACES.

NO CONDUIT SHALL BE INSTALLED ON TOP OF A DECK, ON A WALKWAY, OR IN AN AREA THAT MAY POSE A TRIP HAZARD. NO CONDUIT SHALL BE INSTALLED ABOVE A DECK, ABOVE A WALKWAY, OR IN AN AREA THAT IS COMMONLY TRAVELED. ALL CONDUIT IN SUCH AREAS SHALL BE COORDINATED WITH THE OWNER/ENGINEER AND SHALL BE INSTALLED BELOW GRADE OR IN THE CONCRETE DECKING OR PAD. CONDUIT INSTALLED IN CONCRETE DECKING OR PAD SHALL BE AVOIDED WHEN POSSIBLE. IF CONDUIT IS TO BE ROUTED IN A STRUCTURAL CONCRETE DECK, PAD, WALL, ETC. IT SHALL BE COORDINATED AND APPROVED BY THE ENGINEER PRIOR TO INSTALLATION. CONDUIT INSTALLED IN CONCRETE CAN IMPACT THE STRUCTURAL INTEGRITY OF CONCRETE. IT IS THE CONTRACTORS RESPONSIBILITY TO CONFORM TO ANY REQUIREMENTS REQUIRED OF THE STRUCTURAL ENGINEER TO ACCOMMODATE THE INTEGRITY OF THE INSTALLATION AT NO COST TO THE OWNER. FOR A CONDUIT EMBEDDED IN CONCRETE TO BE CONSIDERED IT MUST BE THE ONLY REASONABLE SOLUTION AS DETERMINED BY THE ENGINEER. ALL PROPOSED INSTALLATIONS MUST COMPLY WITH ACI 318 AND BE ENGINEER APPROVED.

ALL UNDERGROUND CONDUITS SHALL BE SEALED AT BOTH ENDS.

NO CONDUIT PENETRATIONS ON THE TOP OF ANY OUTDOOR PANELS/ENCLOSURES.

EMT IS ACCEPTABLE IN CONDITIONED ELECTRICAL ROOMS AND OFFICE/BREAK AREAS ONLY. EMT SHALL BE TRANSITIONED PRIOR TO EXITING NON CORROSIVE SPACES. EMT SHALL NOT BE USED WHEN IT CAN BE EXPOSED TO ANY CORROSIVE GASES.

CONTROL WIRING REQUIREMENTS

EACH ANALOG INPUT REQUIRES AN 18/2 TWISTED SHIELDED PAIR IN 3/4" CONDUIT UNLESS NOTED OTHERWISE.

EACH ANALOG OUTPUT REQUIRES AN 18/2 TWISTED SHIELDED PAIR IN 3/4" CONDUIT UNLESS NOTED OTHERWISE.

EACH DISCRETE INPUT REQUIRES 2 #14's IN 3/4" CONDUIT UNLESS NOTED OTHERWISE.

EACH DISCRETE OUTPUT REQUIRES 2 #14's IN 3/4" CONDUIT UNLESS NOTED OTHERWISE.

CONTROL WIRING OF THE SAME TYPE MAY BE COMBINED INTO THE SAME CONDUIT. EXAMPLES: TWO 4-20MA ANALOG SIGNALS MAY BE COMBINED, TWO 24VDC DISCRETE SIGNALS MAY BE COMBINED, AND TWO 120VAC DISCRETE SIGNALS MAY BE COMBINED.

NOTE: INSTRUMENTS AND CABLE SHALL BE AS REQUIRED BY THE INSTRUMENT MANUFACTURER.

INSTRUMENT POWER

INSTRUMENTS REQUIRING 120 VAC:

1. MAGNETIC FLOW METERS
2. TURBIDITY TRANSMITTERS
3. pH TRANSMITTERS
4. ORP TRANSMITTERS
5. DO TRANSMITTERS
6. ULTRASONIC LEVEL TRANSMITTERS
7. ULTRASONIC FLOW TRANSMITTERS
8. INFLUENT AND EFFLUENT SAMPLERS

NOTE: THIS LIST IS PROVIDED AS A REFERENCE AND IS NOT ALL INCLUSIVE. COORDINATE WITH THE GENERAL CONTRACTOR AND THE EQUIPMENT SUPPLIERS FOR DETAILED WIRING REQUIREMENTS OF INSTRUMENTS, SENSORS, AND EQUIPMENT.

ELECTRICAL GENERAL NOTES

(GENERAL NOTES APPLICABLE TO ALL ELECTRICAL SHEETS)

1. CONTRACTOR SHALL EXAMINE NOT ONLY PLANS AND SPECIFICATIONS FOR ELECTRICAL AND INSTRUMENTATION, BUT PLANS AND SPECIFICATIONS FOR OTHER RELATED SECTIONS. VISIT THE SITE TO BECOME ACQUAINTED WITH ALL PROJECT CONDITIONS INCLUDING EXISTING CONDITIONS. EXECUTION OF CONTRACT IS EVIDENCE THAT THE CONTRACTOR HAS EXAMINED ALL DRAWINGS AND SPECIFICATIONS AND THAT ALL CONDITIONS OF INSTALLING THE WORK IN THIS SECTION ARE VERIFIED. LATE CLAIMS FOR LABOR AND MATERIALS REQUIRED DUE TO DIFFICULTIES ENCOUNTERED, WHICH COULD HAVE BEEN FORESEEN HAD EXAMINATIONS BEEN MADE WILL NOT BE RECOGNIZED.
2. THE DRAWINGS ARE DIAGRAMMATIC AND ARE NOT INTENDED TO INCLUDE EVERY DETAIL OF REQUIRED CONSTRUCTION, EQUIPMENT, AND MATERIALS. PROVIDE ALL MATERIALS AND WORK NOT SPECIFICALLY MENTIONED, SHOWN, OR CAN BE REASONABLY INFERRED ON THE DRAWINGS BUT WHICH ARE NECESSARY TO FULLY COMPLETE THE WORK.
3. WHEN SUBSTITUTING OTHER EQUIPMENT, MATERIALS, AND PRODUCTS THAN SPECIFIED IN THE CONTRACT DOCUMENTS, INCLUDE IN PRICING ALL COSTS FOR OTHER DESIGN CHANGES TO THE PROJECT (ALL DIVISIONS) WHICH WILL RESULT FROM USE OF THE SUBSTITUTED ITEM(S).
4. REVIEW THE CONTRACT DOCUMENTS OF OTHER DIVISIONS, AND COORDINATE ELECTRICAL AND CONTROL WORK WITH THE WORK OF OTHER DISCIPLINES TO AVOID CONFLICTS AND INTERFERENCE.
5. UPON COMPLETION OF THE WORK REQUIRED UNDER THIS CONTRACT, PROVIDE TYPED UPDATED DIRECTORY WITHIN DOOR OF EACH AFFECTED PANELBOARD. LEAVE "SPARE" BREAKERS IN "OFF" POSITION.
6. ALL MOUNTING HEIGHTS INDICATED ON DRAWINGS ARE TO CENTERLINE, UON.
7. PROVIDE LIGHTING FIXTURES COMPATIBLE WITH CEILING CONSTRUCTION. COORDINATE WITH ARCHITECTURAL ROOM FINISH SCHEDULES.
8. IN AREAS HAVING FINISHED CEILINGS, LOCATE CEILING-MOUNTED ELECTRICAL DEVICES AND FIXTURES ACCORDING TO ARCHITECTURAL REFLECTED CEILING PLAN. DO NOT INSTALL CEILING-MOUNTED SMOKE DETECTORS WITHIN 4 FEET OF HVAC SUPPLY DIFFUSERS.
9. IN ELECTRICAL AND MECHANICAL EQUIPMENT SPACES, COORDINATE EXACT LOCATIONS OF LIGHTING FIXTURES WITH CONDUIT BANKS, DUCTWORK, PIPING, STRUCTURE, SUPPORTS, AND OTHER OBSTRUCTIONS. LOCATE FIXTURES SUCH THAT DIALS, GAUGES, METERS, ETC. ARE PROPERLY ILLUMINATED.
10. DO NOT USE ANY LIGHTING FIXTURE AS A RACEWAY FOR CONDUCTORS NOT SERVING THAT PARTICULAR FIXTURE.
11. CONNECT BATTERY-OPERATED EMERGENCY LIGHTING UNITS AND EXIT SIGNS HAVING BATTERY BACK-UP TO UNSWITCHED LEG OF LOCAL LIGHTING CIRCUIT IN ACCORDANCE WITH MANUFACTURER'S RECOMMENDATIONS AND NEC SUCH THAT FAILURE OF CIRCUIT TRANSFERS UNIT FROM NORMAL TO EMERGENCY MODE, CAUSING LAMPS TO RE-ENERGIZE.
12. DO NOT INSTALL OUTLET BOXES BACK-TO-BACK IN NON-RATED PARTITIONS. OFFSET AND SEAL, SIMILAR TO REQUIREMENTS FOR RATED PARTITIONS, TO MINIMIZE SOUND TRANSMISSION.
13. COORDINATE ROUTING OF ALL LARGE CONDUITS (2" DIA AND LARGER) AND PULL BOX LOCATIONS WITH GENERAL CONTRACTOR PRIOR TO INSTALLATION TO AVOID CONFLICTS AND TO GUARANTEE REQUIRED CLEARANCE AND ACCESSIBILITY OF ELECTRICAL AND OTHER SYSTEMS.
14. COORDINATE WITH OWNER OR OWNER'S SELECTED VENDOR PRIOR TO ROUGH-IN FOR EXACT LOCATIONS OF SPECIAL PURPOSE OUTLETS DEDICATED TO SPECIFIC EQUIPMENT. VERIFY REQUIRED NEMA CONFIGURATION OF ALL SUCH OUTLETS.
15. PROVIDE APPROPRIATE PULL WIRE IN EACH EMPTY SYSTEMS CONDUIT INCLUDED IN THIS PROJECT.
16. INCLUDE GREEN-INSULATED GROUNDING CONDUCTOR SIZED PER 2002 NEC TABLE 250-122 WITH ALL BRANCH CIRCUIT CONDUCTORS SERVING LIGHTING FIXTURES, RECEPTACLES, MECHANICAL OR OTHER DEVICES INSTALLED AT OR BELOW 8'-0".
17. MATCH A.I.C. RATINGS AND OTHER CHARACTERISTICS OF EXISTING DEVICES IN PANELBOARD WHEN ADDING BREAKERS TO EXISTING PANELBOARDS.
18. ALL WORK SHALL BE IN CONFORMANCE WITH THE NATIONAL ELECTRICAL CODE - LATEST EDITION ADOPTED BY INDIANA, THE INDIANA CODE AMENDMENT, LOCAL/MUNICIPAL CODE, AND THE AUTHORITIES HAVING JURISDICTION.
19. ALL CONNECTIONS TO EQUIPMENT SUBJECT TO MOVEMENT OR VIBRATION SHALL BE LIQUID TIGHT FLEXIBLE METAL CONDUIT, NOT LESS THAN 12" IN LENGTH, NOR GREATER THAN 36" IN LENGTH.
20. ALL CONDUIT PENETRATIONS SHALL BE SEALED WITH APPROPRIATE CONDUIT SEALING MATERIAL.
21. ALL CABLE SIZES SHALL UTILIZE COPPER CONDUCTORS.
22. FIELD VERIFY LOCATIONS OF BUILDING EXPANSION JOINTS WHEN ROUTING CONDUIT. ALL CONDUITS CROSSING EXPANSION JOINTS SHALL BE INSTALLED WITH THE EXPANSION FITTINGS. EXPANSION FITTINGS SHALL BE INSTALLED IN ACCORDANCE WITH THE NEC AND MANUFACTURERS WRITTEN RECOMMENDATIONS.
23. FEEDERS FROM PANELBOARDS BACK TO MAIN SWITCHBOARD, BETWEEN AUTO TRANSFER SWITCHES AND THEIR SOURCES/LOADS, BETWEEN DRY TRANSFORMERS AND THEIR SOURCES/LOADS ARE NOT INDICATED. FEEDERS ARE PART OF THE WORK, AND SHALL BE SIZED AS INDICATED ON THE LINE DIAGRAM.
24. HOMERUNS SHALL NOT BE COMBINED IN A RACEWAY UNLESS SHOWN ON THE CONTRACT DRAWINGS. SINGLE PHASE BRANCH CIRCUIT HOMERUNS MAY BE COMBINED AT THE CONTRACTORS DISCRETION NOT GREATER THAN (3) PHASE CONDUCTORS, NEUTRAL CONDUCTORS, AND A GROUNDING CONDUCTOR.
25. EACH SINGLE PHASE BRANCH CONDUCTOR SHALL HAVE A DEDICATED NEUTRAL BACK TO THE PANEL.
26. ALL PENETRATIONS BELOW GRADE SHALL USE LINK SEALS.
27. WHERE LOW VOLTAGE (CONTROL) CABLING IS ALLOWED TO BE INSTALLED WITHOUT A RACEWAY, IT SHALL BE SUPPORTED NOT EXCEEDING INTERVALS OF 48", AND NOT MORE THAN 6" FROM THE CABINETS, BOXES, FITTINGS, OUTLETS, RACKS, FRAMES AND TERMINALS.
28. ALL MOUNTING HARDWARE INCLUDING NUTS, BOLTS, SCREWS, WASHERS, ETC. SHALL BE STAINLESS STEEL.
29. MOUNT JUNCTION BOXES AND DISCONNECT SWITCHES ON STAINLESS STEEL UNISTRUT.
30. ALL UNISTRUT, MOUNTING BRACKETS AND SUPPORTING STRUCTURES SHALL BE STAINLESS STEEL.
31. DO NOT MIX CONTROL AND POWER CONDUCTORS IN THE SAME CONDUIT. DO NOT MIX DISCRETE AND ANALOG CONTROL CONDUCTORS IN THE SAME CONDUIT.
32. ADJUSTABLE SPEED DRIVES (ASD) LINE AND LOAD WIRE SHALL BE RUN IN SEPARATE RACEWAYS.
33. CONTRACTOR SHALL COORDINATE WITH HEAT TRACE MANUFACTURER DURING BIDDING AND CONSTRUCTION AND SHALL PROVIDE ALL CONDUIT, WIRING, AND CIRCUITS AS REQUIRED. HEAT TRACE SHALL BE PROVIDED/INSTALLED COMPLETE. ALL HEAT TRACE IS REQUIRED TO BE GFI PROTECTED.
34. CONTRACTOR SHALL NOT COMBINE POWER FEEDS FOR THREE PHASE LOADS.
35. THE BELOW LOCATIONS ARE WHERE GFCI OUTLETS ARE REQUIRED:
    - 35.1. KITCHENS: ALL KITCHEN OUTLETS.
    - 35.2. BATHROOMS: GFCI OUTLETS ARE REQUIRED IN BATHROOMS NEAR THE SINK.
    - 35.3. GARAGES: GFCI OUTLETS ARE REQUIRED IN GARAGES THAT HAVE SINKS.
    - 35.4. BASEMENTS: UNFINISHED BASEMENTS REQUIRE AT LEAST ONE GFCI OUTLET.
    - 35.5. OUTDOOR SPACES: GFCI OUTLETS ARE REQUIRED IN OUTDOOR AREAS THAT ARE ACCESSIBLE OR AT GRADE LEVEL.
    - 35.6. LAUNDRY ROOMS: ALL LAUNDRY ROOM OUTLETS.
    - 35.7. CRAWL SPACES: GFCI OUTLETS ARE REQUIRED IN CRAWL SPACES WHERE MECHANICAL EQUIPMENT IS LOCATED.
    - 35.8. UTILITY ROOMS: ALL UTILITY ROOM OUTLETS.
36. LIMIT CAT 6E INSTALLATION TO 230' MAXIMUM DISTANCE. CONTRACTOR SHALL FURNISH AND INSTALL FIBER OPTIC CABLE AND MEDIA CONVERTERS IF CONDUIT ROUTING EXCEEDS CAT 6E LIMITS.

LEGEND

SYMBOL	DESCRIPTION	MTG HGT AFF TO CL, UON
	OPEN LIGHTING FIXTURE SYMBOLOGY DENOTING FIXTURES CONNECTED TO NORMAL POWER: FIXTURE TYPE DETERMINES MOUNTING.	-----
	SINGLE DIAGONAL LIGHTING FIXTURE SYMBOLOGY DENOTING FIXTURES CONNECTED TO CRITICAL OR EQUIPMENT BRANCH (OR EMERGENCY POWER), UON: FIXTURE TYPE DETERMINES MOUNTING.	-----
	DOUBLE DIAGONAL LIGHTING FIXTURE SYMBOLOGY DENOTING FIXTURES CONNECTED TO LIFE SAFETY BRANCH (OR EMERGENCY POWER), UON: FIXTURE TYPE DETERMINES MOUNTING.	-----
	BATTERY POWERED EMERGENCY LIGHTING UNIT	7'-6"
	EXIT SIGN: ARROWS DENOTE DIRECTIONAL INDICATING CHEVRON RQMTS, SHADING DENOTES FACE(S) ORIENTATION.	-----
	WALLWASH OR OTHER DIRECTIONALLY ADJUSTABLE/AIMABLE FIXTURE: OPEN SIDE DENOTES ORIENTATION. TYPE DETERMINES MOUNTING.	-----
	TRACK LIGHTING FIXTURE: TYPE DETERMINES MOUNTING.	-----
	POLE-MOUNTED SITE LIGHTING FIXTURE: TYPE DETERMINES MTG.	-----
	FLOOD LIGHTING FIXTURE: TYPE DETERMINES MOUNTING.	-----
PC	PHOTO-CELL	-----
	ALL FIXTURES IN THIS SPACE SHALL BE SAME TYPE INDICATED, U.O.N.	-----
S	SINGLE-POLE TOGGLE SWITCH	3'-10"
$	SINGLE-POLE TOGGLE SWITCH: SLASH DENOTES ESSENTIAL POWER SYSTEM CONNECTION - TYPICAL FOR ALL SWITCHES.	3'-10"
$OM	DUAL TECHNOLOGY, WALL MNTD OCCUPANCY SENSOR WITH MANUAL OVERRIDE SWITCH	3'-10"
$OC	DUAL TECHNOLOGY, CEILING MNTD OCCUPANCY SENSOR WITH REMOTE MANUAL OVERRIDE SWITCH	
$OR	SINGLE-POLE REMOTE OVERRIDE SWITCH FOR CEILING MNTD OCCUPANCY SENSOR	3'-10"
$D	DIMMER SWITCH	3'-10"
$D3	THREE-WAY DIMMER SWITCH	3'-10"
$P	SINGLE-POLE TOGGLE SWITCH WITH PILOT LIGHT	3'-10"
$M	SINGLE-POLE MOTOR-RATED TOGGLE SWITCH DISCONNECT	3'-10"
$T	SINGLE-POLE OR DOUBLE-POLE MANUAL MOTOR STARTER WITH MELTING ALLOY ELEMENTS FOR THERMAL OVERLOAD PROTECTION	3'-10"
$IR	OCCUPANCY SENSOR SWITCH	3'-10"
$IT	INTERVAL TIMER RESET AND CONTROL SWITCH	3'-10"
$J	JOG SWITCH	3'-10"
	MUSHROOM HEAD TYPE PUSHBUTTON STATION	5'-0"
P	AUTO DOOR CONTROL PUSHPLATE	-----
$V	VARIABLE INTENSITY CONTROLLER INCLUDED WITH OWNER-FURNISHED-CONTRACTOR-INSTALLED SURGICAL LIGHTING FIXTURE	5'-0"
$LV	LOW VOLTAGE CONTROL SWITCH	3'-10"
WS	FACTORY SUPPLIED WALL CONTROLLER FOR CEILING MOUNTED LIGHT-INSTALLED BY ELECTRICAL CONTRACTOR	3'-10"
	120V DUPLEX RECEPTACLE, STANDARD MOUNTING HEIGHT	1'-6"
	120V DUPLEX RECEPTACLE, SPECIAL MOUNTING HEIGHT INSTALL AT SAME HEIGHT AS SWITCHES IF NO HEIGHT IS INDICATED	ABOVE COUNTER
	120V QUADRUPLEX RECEPTACLE, STANDARD MOUNTING HEIGHT	1'-6"
	120V QUADRUPLEX RECEPTACLE, SPECIAL MOUNTING HEIGHT INSTALL AT SAME HEIGHT AS SWITCHES IF NO HEIGHT IS INDICATED	ABOVE COUNTER
	120V SINGLE RECEPTACLE, AMP RATING (IF OTHER THAN 20A) SHOWN: STANDARD MOUNTING HEIGHT, OR OTHER HEIGHT AS NOTED	1'-6", UON
GFCI	120V GFCI DUPLEX RECEPTACLE, STANDARD MOUNTING HEIGHT	1'-6"
	120V GFCI QUADRUPLEX RECEPTACLE, SPECIAL MOUNTING HEIGHT INSTALL AT SAME HEIGHT AS SWITCHES IF NO HEIGHT IS INDICATED	ABOVE COUNTER
	120V GFCI DUPLEX RECEPTACLE, SPECIAL MOUNTING HEIGHT INSTALL AT SAME HEIGHT AS SWITCHES IF NO HEIGHT IS INDICATED	ABOVE COUNTER
	SINGLE RECEPTACLE (OTHER THAN 120V), VOLTAGE, AMP RATING, NEMA CONFIGURATION, AND MOUNTING HEIGHT AS NOTED	-----
	RECPTACLE OR J-BOX CONNECTION FOR X-RAY VIEWER. VERIFY CONNECTION RQMTS WITH UNIT FURNISHED PRIOR TO ROUGH-IN	-----
	120V DUPLEX RECEPTACLE IN FLUSH FLOOR-MOUNTED BOX	-----
TP	TELE-POWER POLE	-----
H	HALON DUMP STATION	-----
F	FIRE ALARM MANUAL PULL STATION	3'-10"
FK	FIRE ALARM MANUAL PULL STATION, KEY-OPERATED	3'-10"
D	FIRE ALARM CEILING-MOUNTED SMOKE DETECTOR	-----
H	FIRE ALARM CEILING-MOUNTED HEAT DETECTOR	-----
DS	FIRE ALARM SUPPLY AIR DUCT-MOUNTED SMOKE DETECTOR	-----
DR	FIRE ALARM RETURN AIR DUCT-MOUNTED SMOKE DETECTOR	-----
DPR	FIRE ALARM PROJECTED BEAM SMOKE DETECTOR - RECEIVER	AS NOTED
DPT	FIRE ALARM PROJECTED BEAM SMOKE DETECTOR - TRANSMITTER	AS NOTED
V	FIRE ALARM CONNECTION TO SPRINKLER SYSTEM VALVE STATUS SWITCH (TAMPER SWITCH)	-----
FS	FIRE ALARM CONNECTION TO SPRINKLER SYSTEM WATER FLOW SWITCH	-----
F	FIRE ALARM AUDIO/VISUAL NOTIFICATION DEVICE-CHIME & STROBE	6'-8"
F	FIRE ALARM AUDIO/VISIUAL NOTIFICATION DEVICE-HORN & STROBE	6'-8"
F	FIRE ALARM VISUAL ONLY NOTIFICATION DEVICE - STROBE LIGHT	6'-8"
FS HFS	FIRE ALARM SPEAKER: CEILING-MOUNTED, WALL-MOUNTED	6'-8"
FH	FIRE ALARM HORN, WALL-MOUNTED	AS NOTED
FSI HSI	DUCT SMOKE DETECTOR ALARM REMOTE INDICATOR LIGHT: CEILING-MOUNTED, WALL-MOUNTED	6'-8"
SAI HSAI	DUCT SMOKE DETECTOR ALARM REMOTE INDICATOR LIGHT AND TEST SWITCH: CEILING-MOUNTED, WALL-MOUNTED	6'-8"
Z	FIRE ALARM ZONE ADDRESSABLE MODULE	-----
I	FIRE ALARM INDIVIDUAL ADDRESSABLE MODULE	-----
	FIRE ALARM ELECTRO-MAGNETIC DOOR HOLDER	6'-4"
FR	FIRE RELAY	-----
	DESK MOUNTED INTERCOM	-----
	WALL MOUNTED INTERCOM	-----
$X	EXPLOSION PROOF SWITCH	3'-10"
$3	3 WAY SWITCH	3'-10"
$4	4 WAY SWITCH	3'-10"
$WP	NEMA 4X SWITCH	3'-10"

PUMP AND METER LEGEND

SYMBOL	DESCRIPTION
M	MAGNETIC FLOW METER
	SONIC FLOW METER
	CENTRIFUGAL PUMP
	LOBE PUMP
	PERISTALTIC PUMP
	SUBMERSIBLE PUMP
	GRINDER PUMP

LEGEND

ABBREVIATIONS

ABV	ABOVE	IG	ISOLATED GROUND
AFF	ABOVE FINISHED FLOOR	MON	MONITOR
ACLG	ABOVE FINISHED CEILING	MTG	MOUNTING
BFC	BELOW FINISHED CEILING	MV	MULTI-VIEWER
C	CRITICAL BRANCH OR EMERG PWR-RED DEVICE & PLATE, UON.	MW	MICROWAVE OVEN
CL	CENTER-LINE	NEC	NATIONAL ELECTRICAL CODE
CLG	CEILING-MOUNTED	OCPD	OVERCURRENT PROTECTIVE DEVICE
COF	COFFEE MAKER	OFCI	OWNER-FURNISHED-CONTRACTOR-INSTALLED
COP	COPIER	OFE	OWNER-FURNISHED EQUIPMENT
CTR	COUNTER	PRT	PRINTER
ECB	ENCLOSED CIRCUIT BREAKER	PTS	PNEUMATIC TUBE STATION
EMER	EMERGENCY	Q	EQUIP BRANCH OR EMERG PWR-RED DEVICE & PLATE, UON.
EWC	ELECTRIC WATER COOLER	REF	REFRIGERATOR
EWH	ELECTRIC WATER HEATER	RQMTS	REQUIREMENTS
FAX	FACSIMILE MACHINE	T	TAMPERPROOF DEVICE
FBO	FURNISHED BY OTHERS	TSP	TWISTED SHIELDED PAIR
GFCI	GROUND FAULT CIRCUIT INTERRUPTING - PERSONNEL PROTECTION	UON	UNLESS OTHERWISE NOTED
GFI	GROUND FAULT INTERRUPTING - EQUIPMENT PROTECTION	UCR	UNDER-COUNTER REFRIGERATOR
HGT	HEIGHT	WP	WEATHERPROOF
FPMR	FUSED PER MANUFACTURE'S RECOMMENDATIONS		

SYMBOL	DESCRIPTION	MTG HGT AFF TO CL, UON
	EXPOSED RACEWAY	-----
	RACEWAY CONCEALED IN OR ABOVE CEILINGS AND WITHIN WALLS	-----
	BRANCH CIRCUIT RACEWAY CONCEALED IN OR BELOW FLOOR SLAB OR BELOW GRADE	-----
	FEEDER RACEWAY CONCEALED BELOW FLOOR SLAB OR BELOW GRADE	-----
	LIGHTNING PROTECTION CABLING	-----
	HOMERUN RACEWAY: NUMBER OF ARROWHEADS DENOTES NUMBER OF CIRCUITS.	-----
	RACEWAY TURNING UP AS VIEWED FROM THE LOAD	-----
	RACEWAY TURNING DOWN AS VIEWED FROM THE LOAD	-----
	RACEWAY VERTICAL RISER WITH HORIZONTAL CONTINUATION AT TWO LEVELS SHOWN	-----
	CAPPED RACEWAY	-----
	GENERAL LIGHTING OR OUTLET CIRCUIT - MAY BE DAISY CHAINED	
J	JUNCTION BOX	AS NOTED
	ENCLOSED BREAKER	
	FUSIBLE SAFETY SWITCH (AMP RATING, POLES, FUSE SIZE, AND NEMA ENCLOSURE TYPE IF OTHER THAN 1 NOTED)	-----
	NON-FUSIBLE SAFETY SWITCH (AMP RATING, POLES, AND NEMA ENCLOSURE TYPE IF OTHER THAN 1 NOTED)	-----
	COMBINATION MAGNETIC ACROSS-THE-LINE STARTER WITH MOTOR CIRCUIT PROTECTOR (NEMA STARTER SIZE NOTED)	-----
	CONTROL PANEL FURNISHED INTEGRAL TO EQUIPMENT (SINGLE-POINT ELECTRICAL CONNECTION REQUIRED)	-----
	MOTOR	-----
	FLEXIBLE CONDUIT CONNECTION	-----
	SURFACE- OR FLUSH-MOUNTED LIGHTING/RECEPTACLE PANELBOARD	-----
	POWER DISTRIBUTION PANELBOARD	-----
T T	DRY TYPE TRANSFORMER	-----
XXX	MISCELLANEOUS SYSTEMS PANEL OR CABINET: REFER TO ABBREVIATIONS.	-----

NOTE !! ALL ABBREVIATIONS, NOTES, AND SYMBOLS SHOWN ON THIS DRAWING DO NOT NECESSARILY APPEAR IN THIS SET OF CONTRACT D

EXISTING STRUCTURES	
IDENTIFIER	**DESCRIPTION**
A	EX. LIFT STATION NO. 3 (PLANT INFLUENT LS)
B	EX. SLUDGE TREATMENT UNITS
C	EX. SLUDGE BLOWER BUILDING
D	EX. SLUDGE STORAGE TANK
E	EX. LAB / ADMINISTRATION TRAINING BUILDING
F	EX. SBR TANKS NO. 6, 7, AND 8
G	EX. HEADWORKS BUILDING
H	EX. SBR TANKS NO. 4 AND 5
I	EX. SBR TANKS 1, 2, AND 3
J	EX. EQUALIZATION TANK
K	EX. ULTRAVIOLET LIGHT DISINFECTION FACILITY
L	EX. STORAGE TO BE CONVERTED TO ADMINISTRATION
M	EX. STORAGE GARAGE
N	EX. HOUSE
O	APPROX. EX. SEPTIC FIELD

CONSTRUCTION LIMITS

DO NOT DISTURB
DESIGNATED WETLANDS

APPROX. EX. POND
TO BE FILLED IN

EXISTING 200A ELECTRICAL SERVICE AND ASSOCIATED PANELS (TO BE DEMOLISHED AND REMOVED COMPLETE) (1)

DO NOT DISTURB
DESIGNATED WETLANDS

CONSTRUCTION LIMITS

PROTECT APPROX. EX. SEPTIC SYSTEM LIMITS (O)

PROTECT APPROX. EX. SEPTIC SYSTEM LIMITS (O)

PROTECT EX. TREES WITHIN FLOODWAY TO REMAIN (TYP.)

CONSTRUCTION LIMITS

CYPRESS CREEK

VANADA ROAD

VANADA ROAD

CONSTRUCTION LIMITS

EX. LIFT STATION NO. 2
24" FORCE MAIN

EX. SBR
TANKS NO.
4 AND 5

EX. SBR
TANKS NO.
6, 7, AND 8

EX. LIFT STATION
NO. 3 24" FORCE
MAIN

SITE DEMOLITION PLAN

SCALE: 1"=40'-0"

0 40' 80'

GENERAL NOTES:

1. EXISTING INFORMATION OBTAINED FROM 2008 COMMONWEALTH ENGINEERS, INC. "WASTEWATER TREATMENT PLANT EXPANSION PROJECT", SITE SURVEY, AND FIELD INVESTIGATIVE WORK PERFORMED BY CEI. CONTRACTOR SHALL TAKE INTO CONSIDERATION EXISTING BURIED EQUIPMENT WHEN PLANNING THE INSTALLATION OF THE NEW EQUIPMENT OUTLINED IN THIS PROJECT. CONTRACTOR SHALL VISIT THE SITE TO BECOME ACQUAINTED WITH ALL PROJECT CONDITIONS INCLUDING EXISTING CONDITIONS. EXECUTION OF CONTRACT IS EVIDENCE THAT THE CONTRACTOR HAS EXAMINED ALL DRAWINGS AND SPECIFICATIONS AND THAT ALL CONDITIONS OF INSTALLING THE WORK IN THIS SECTION ARE VERIFIED. CLAIMS FOR LABOR, MATERIAL, OR TIME EXTENSIONS REQUIRED DUE TO DIFFICULTIES ENCOUNTERED, WHICH COULD HAVE BEEN FORESEEN HAD EXAMINATIONS BEEN MADE, WILL NOT BE RECOGNIZED.
2. SHEET DETAILS ITEMS TO BE DEMOLISHED, REMOVED, AND LAWFULLY DISPOSED OF COMPLETE TO ACCOMMODATE IMPROVEMENTS (THIS IS NOT INTENDED TO BE ALL INCLUSIVE, MERELY A REFERENCE). CONTRACTOR SHALL PERFORM ANY AND ALL DEMOLITION, REMOVAL, AND DISPOSAL ACTIVITIES AS REQUIRED FOR COMPLETE AND OPERATIONAL FACILITIES / INSTALLATIONS. REQUIRED DEMOLITION FOR SMALL DIAMETER PIPING, CONDUIT, ETC. NOT SHOWN ON THIS SHEET FOR CLARITY.
3. PLANT IS TO REMAIN FULLY FUNCTIONAL DURING CONSTRUCTION.
4. AT THE CONTRACTOR'S DISCRETION DURING ELECTRICAL CUT OVER, COORDINATE WITH UTILITY OR USE EMERGENCY GENERATOR TO MAINTAIN OPERATION OF WASTEWATER TREATMENT PLANT. CONTRACTOR RESPONSIBLE FOR FUEL COST.
5. OWNER SHALL HAVE FIRST RIGHT OF REFUSAL FOR ALL DEMOLISHED EQUIPMENT BEFORE THE CONTRACTOR DISPOSES OF EQUIPMENT.
6. REMOVE ALL WIRING BACK TO SOURCE. CUT EXISTING EXTERIOR CONDUITS TO 8" BELOW GRADE AND SEAL CONDUITS. EXISTING CONDUIT ENTERING CONCRETE OR CONDUIT ENTERING BLACKTOP SHALL BE CUT FLUSH AND CAPPED WITH GROUT.

PLAN NOTES:

(1) CONTRACTOR SHALL DEMOLISH EXISTING 200A 240V 1PH. SERVICE. COORDINATE WITH ELECTRIC UTILITY AS REQUIRED. CONTRACTOR SHALL DEMOLISH ALL ELECTRICAL PANELS, MOUNTING STRUCTURE, ETC. LOCATED IN FIELD TO MAKE WAY FOR CONSTRUCTION TO OCCUR THIS PROJECT. EXISTING CONDUIT AND WIRE SHALL ALSO BE DEMOLISHED; NEW CONDUIT AND WIRE SHALL BE RUN FOR REFEED OF BUILDINGS M AND L THIS PROJECT.

For Public Viewing Only-Not For Downloading

COMMONWEALTH ENGINEERS, INC.
A wealth of resources to master a common goal.
https://commonwealthengineers.com/

MICHAEL A. MIRANDE II
REGISTERED
No. 19800084
STATE OF INDIANA
PROFESSIONAL ENGINEER

Signature 10/03/25 Date

TOWN OF NEWBURGH
WARRICK COUNTY, INDIANA

WASTEWATER TREATMENT
PLANT FLOW EQ BASIN

© 2025 BY COMMONWEALTH ENGINEERS, INC. ALL RIGHTS RESERVED. REPRODUCTION IN PART OR WHOLE OR IN PART WITHOUT PERMISSION IS PROHIBITED

Indiana 811 Know what's below. 811 before you dig. 1-800-382-5544 (ITS THE LAW)

No.	Submittal / Revision	By	Date

Designed By:	Drawn By:	Checked By:
REW	REW	MAM
Issue Date: 10/03/25	Project No: S18005-041	Scale: AS SHOWN

ELECTRICAL SITE DEMOLITION PLAN

Drawing No: **E1-0**

Sheet: 141 OF 161

File: Z:\SHARED\IN CLIENTS M-Z\NEWBURGH\S18005 ON CALL SEWER ENG SVCS\041 WWTP FLOW EQ BASIN\05 CAD\K MECH-ELECT\NEWBURGH ELECTRICAL SITE PLAN.DWG
Saved: 10/2/2025 3:50:03 PM Plotted: 10/2/2025 6:00:49 PM Current User: Rogan Wakefield, EI LastSavedBy: rwakefield

#	EXISTING STRUCTURES
IDENTIFIER	DESCRIPTION
A	EX. LIFT STATION NO. 3 (PLANT INFLUENT LS)
B	EX. SLUDGE TREATMENT UNITS
C	EX. SLUDGE BLOWER BUILDING
D	EX. SLUDGE STORAGE TANK
E	EX. LAB / ADMINISTRATION TRAINING BUILDING
F	EX. SBR TANKS NO. 6, 7, AND 8
G	EX. HEADWORKS BUILDING
H	EX. SBR TANKS NO. 4 AND 5
I	EX. SBR TANKS 1, 2, AND 3
J	EX. EQUALIZATION TANK
K	EX. ULTRAVIOLET LIGHT DISINFECTION FACILITY
L	EX. STORAGE TO BE CONVERTED TO ADMINISTRATION
M	EX. STORAGE GARAGE
N	EX. HOUSE
O	EX. SEPTIC FIELD THIS AREA TO REMAIN (SEE NOTE 1)

CONSTRUCTION LIMITS

APPROX. EX. POND **TO BE FILLED IN**

CONSTRUCTION LIMITS

DESIGNATED WETLANDS

(1) **SPACE FOR NEW PAD MOUNT TRANSFORMER PAD IF REQUIRED BY UTILITY**

(2) **MOUNT NEW WATT HOUR METER NEAR NEW TRANSFORMER**

NEW HEADWORKS (3)

NEW HYDROGEN SULFIDE REMOVAL FACILITY (4)

NEW CONCRETE GENERATOR PAD

NEW EQUALIZATION TANK (5)

PROTECT APPROX. EX. SEPTIC SYSTEM LIMITS (O)

EX. GRAVEL DRIVE

(1) **NEW SERVICE DROP PRIMARY UNDERGROUND CONDUIT**

NEW ELECTRIC 30' CANTILEVER SLIDE GATE

NEW FLOW CONTROL VAULT (6)

(8) **EXISTING CONDUIT FOR NEW NPW PUMP POWER FEED**

DNR APPROXIMATE FLOODWAY

CYPRESS CREEK

VANADA ROAD (1)

NEW LS NO. 2 FORCE MAIN VALVE VAULT (6)

EXISTING HAND HOLE (8)

CONSTRUCTION LIMITS

NEW NPW STRUCTURE & NEW NPW PUMP

EXISTING HAND HOLE (8)

EXISTING MDHB SWITCHBOARD

NEW LS NO. 3 FORCE MAIN VALVE VAULT (6)

EXISTING LS #3 MCC

SITE IMPROVEMENTS PLAN

SCALE: 1"=40'-0"

0 40' 80'

LIGHTING FIXTURE SCHEDULE

IMAGE	TYPE	MFR	CATALOG NUMBER	LAMPS	VOLT	MOUNTING	NOTES
	F4	MATCH EXISTING	MATCH EXISTING	MATCH EXISTING	120	MOUNT	THE UNIT SHALL MOUNT TO THE POLE AT 30'-0" BY MEANS OF A DIE-CAST SUPPORT ARM. THE COMPLETE LUMINAIRE INCLUDING LED LIGHT ENGINES AND LED POWER COMPONENTS SHALL BE WARRANTED BY THE MANUFACTURER FOR A MINIMUM OF FIVE (5) YEARS FROM THE DATE OF SUBSTANTIAL COMPLETION. THE FINISH FOR THE LUMINAIRE SHALL BE SELECTED BY THE OWNER.
POLE		HUBBELL, LITHONIA, CREE, OR EQUAL	SSSH30-40B-2-S2 SSSH30-40B-3T-S2 SSSH30-40B-4-S2				POLE: THE POLE SHALL BE 30'-0" TALL BY 4" MIN. SQUARE STRAIGHT ALUMINUM WITH FINISH AS SELECTED BY THE OWNER FROM THE MANUFACTURER'S STANDARD FINISHES. THE POLE SHALL HAVE A MINIMUM 0.188" MINIMUM WALL THICKNESS AND SHALL BE RATED FOR 100 MPH WINDS WITH A 1.3 GUST FACTOR WITH THE SPECIFIED LUMINAIRE. THE POLE SHAFT SHALL BE ONE-PIECE STRAIGHT STEEL WITH SQUARE CROSS SECTION AND SHALL BE CIRCUMFERENTIALLY WELDED TOP AND BOTTOM. THE POLE SHALL BE FURNISHED COMPLETE WITH "L" FORMED ANCHOR BOLTS, ALUMINUM NUT COVERS, HANDHOLE AT +14" AND FUSE BLOCK LOCATED NEAR HANDHOLE. THE POLE SHALL BE COMPLETE WITH INTERNAL VIBRATION DAMPERS.
PROVIDE BULBS FOR ALL FIXTURES. PROVIDE 10% SPARE BULBS TO THE OWNER AT THE END OF THE PROJECT. PROVIDE ALL MOUNTING HARDWARE REQUIRED TO MOUNT NEW FIXTURE.							

GENERAL NOTES:

CONTRACTOR SHALL EXAMINE NOT ONLY PLANS AND SPECIFICATIONS FOR ELECTRICAL AND INSTRUMENTATION, BUT PLANS AND SPECIFICATIONS FOR OTHER RELATED SECTIONS. VISIT THE SITE TO BECOME ACQUAINTED WITH ALL PROJECT CONDITIONS INCLUDING EXISTING CONDITIONS. EXECUTION OF CONTRACT IS EVIDENCE THAT THE CONTRACTOR HAS EXAMINED ALL DRAWINGS AND SPECIFICATIONS AND THAT ALL CONDITIONS OF INSTALLING THE WORK IN THIS SECTION ARE VERIFIED. CLAIMS FOR LABOR, MATERIAL, OR TIME EXTENSIONS REQUIRED DUE TO DIFFICULTIES ENCOUNTERED, WHICH COULD HAVE BEEN FORESEEN HAD EXAMINATIONS BEEN MADE WILL NOT BE RECOGNIZED.

PLANT IS TO REMAIN FULLY FUNCTIONAL DURING CONSTRUCTION.

ALL EXPOSED PROCESS PIPING (EXCLUDING AIR PIPING) SHALL BE HEAT TRACED.

REFER TO E0-0 FOR CONDUIT INFORMATION.

CONTRACTOR IS RESPONSIBLE FOR WIRE SIZE BASED UPON CONDUIT ROUTING AND LENGTH OF FINAL WIRE RUN. CONTRACTOR SHALL SIZE WIRE BASED UPON A MAXIMUM 3% VOLTAGE DROP. CONTRACTOR IS RESPONSIBLE FOR ANY COSTS INCURRED BY INCREASED WIRE SIZE.

PLAN NOTES:

(1) NEW ELECTRICAL SERVICE SHALL BE 480V THREE PHASE. CONTRACTOR IS RESPONSIBLE FOR COORDINATING WITH LOCAL UTILITY DURING BIDDING AND CONSTRUCTION. CONTRACTOR IS RESPONSIBLE FOR PROVIDING ALL LABOR AND MATERIAL NOT PROVIDED BY UTILITY; THIS MAY INCLUDE CONCRETE TRANSFORMER PAD, SECONDARY WIRE AND CONDUIT, PRIMARY CONDUIT, TERMINATIONS, ETC. EXISTING THREE PHASE POWER LINES ARE AVAILABLE ALONG VANADA ROAD. CONTRACTOR SHALL COORDINATE WITH UTILITY REGARDING EXACT LOCATION OF NEW SERVICE DROP.

(2) CONTRACTOR IS RESPONSIBLE FOR PROVISION AND INSTALLATION OF NEW METER BASE AND MOUNTING AS REQUIRED BY UTILITY. COORDINATE DURING BIDDING AND CONSTRUCTION. PROVIDE CT CABINET IF REQUIRED BY UTILITY.

(3) NEW HEADWORKS FACILITY IS AN ENCLOSED, CLASSIFIED SPACE. ALL ELECTRICAL EQUIPMENT TO BE INSTALLED WITHIN THE HEADWORKS FACILITY SHALL BE RATED FOR A CLASS 1 DIVISION 1 GROUP D ENVIRONMENT PER NFPA 820 UNLESS OTHERWISE NOTED. PROVIDE CONDUIT SEAL OFFS. THE ELECTRICAL ROOM AND SAMPLER ROOM WITHIN THE HEADWORKS FACILITY ARE NON CLASSIFIED SPACES.

(4) NEW H2S STRUCTURE WELL IS AN ENCLOSED, CLASSIFIED SPACE. ALL ELECTRICAL EQUIPMENT TO BE INSTALLED WITHIN THE CLASSIFIED SPACE SHALL BE RATED FOR A CLASS 1 DIVISION 1 GROUP D ENVIRONMENT PER NFPA 820. THE CLASSIFIED SPACE INCLUDES THE ENTIRETY OF THE WET WELL AND AN ENVELOPE 18" ABOVE THE WETWELL TOP SLAB AND EXTENDS 3' ON EACH SIDE. PROVIDE CONDUIT SEAL OFFS.

(5) NEW EQ TANK IS A CLASS 1 DIVISION 2 GROUP D RATED SPACE. THE CLASSIFIED ENVELOPE EXTENDS 10FT IN EVERY DIRECTION AROUND THE EQUIPMENT AND OPEN BASIN. ALL ELECTRICAL EQUIPMENT TO BE INSTALLED WITHIN THIS ENVELOPE, INCLUDING LIGHTS, DISCONNECTS, ETC. SHALL BE RATED APPROPRIATELY FOR THE CLASSIFIED SPACE. PROVIDE CONDUIT SEAL OFFS.

(6) NEW LS#3, LS#2, AND EQ VALVE VAULTS ARE CLASS 1 DIVISION 2 GROUP D RATED SPACES. THE CLASSIFIED SPACE EXTENDS 18" ABOVE TOP SLAB AND EXTENDS 3' ON EACH SIDE. ALL ELECTRICAL EQUIPMENT TO BE INSTALLED WITHIN THIS ENVELOPE SHALL BE RATED APPROPRIATELY FOR THE CLASSIFIED SPACE. PROVIDE CONDUIT SEAL OFFS.

PLAN NOTES:

(7) CONTRACTOR SHALL PROVIDE AND INSTALL POLE MOUNTED LIGHTS AS SHOWN. INSTALL DAY/NIGHT SENSORS ON ALL EXTERIOR POLE MOUNTED LIGHTS WITH (1) WEATHERPROOF OFF - AUTO SWITCH MOUNTED BY EXTERIOR HEADWORKS DOOR. PROVIDE FLUSH CONCRETE POLE BASE; SEE ELECTRICAL DETAILS. CONTRACTOR SHALL ALSO PROVIDE AND INSTALL ONE (1) DUPLEX WEATHERPROOF GFCI RECEPTACLE FOR EACH EXTERIOR POLE LIGHT TO BE INSTALLED ON POLE BASE.

(8) EXISTING P055 3" C IS AVAILABLE FOR CONTRACTOR USE FOR POWER FEED TO NEW NPW PUMP. CONTRACTOR IS RESPONSIBLE FOR PROVIDING AND INSTALLING NEW CONDUIT FROM EXISTING HAND HOLE TO SWITCHBOARD MDHB AND FROM EXISTING HAND HOLE TO NEW NPW PUMP. CONDUIT P055 CONTAINS EXISTING 3-400KCMIL & #2 G; CONTRACTOR SHALL ENSURE CONDUIT FILL DOES NOT EXCEED 40% PER NEC.

MANDATORY ALTERNATE #3: CONTRACTOR SHALL PROVIDE ALL NEW CONDUIT FOR COMPLETE RUN FROM MDHB TO NEW NON POTABLE WATER PUMP FOR PUMP POWER FEED.

For Public Viewing Only-Not For Downloading

COMMONWEALTH ENGINEERS, INC.
A wealth of resources to master a common goal.
https://commonwealthengineers.com/

MICHAEL A. MIRANDE II
REGISTERED
No. 19800084
STATE OF INDIANA
PROFESSIONAL ENGINEER
Signature 10/03/25 Date

TOWN OF NEWBURGH
WARRICK COUNTY, INDIANA

WASTEWATER TREATMENT PLANT FLOW EQ BASIN

© 2025 BY COMMONWEALTH ENGINEERS, INC. ALL RIGHTS RESERVED. REPRODUCTION OR USE OF THIS PLAN IN WHOLE OR IN PART WITHOUT PERMISSION IS PROHIBITED

Indiana811 Know what's below. 811 before you dig. 1-800-382-5544 (ITS THE LAW)

No.	Submittal / Revision	By	Date

Designed By:	Drawn By:	Checked By:
REW	REW	MAM
Issue Date: 10/03/25	Project No: S18005-041	Scale: AS SHOWN

ELECTRICAL SITE IMPROVEMENTS PLAN

Drawing No: **E1-1**

Sheet: 142 OF 161

File: Z:\SHARED\IN CLIENTS M-Z\NEWBURGH\S18005 ON CALL SEWER ENG SVCS\041 WWTP FLOW EQ BASIN\06 CADK MECH-ELEC\NEWBURGH ELECTRICAL SITE PLAN.DWG
Saved: 10/2/2025 3:50:03 PM Plotted: 10/2/2025 6:01:05 PM Current User: Regan Wakefield, EI LastSavedBy: rwakefield

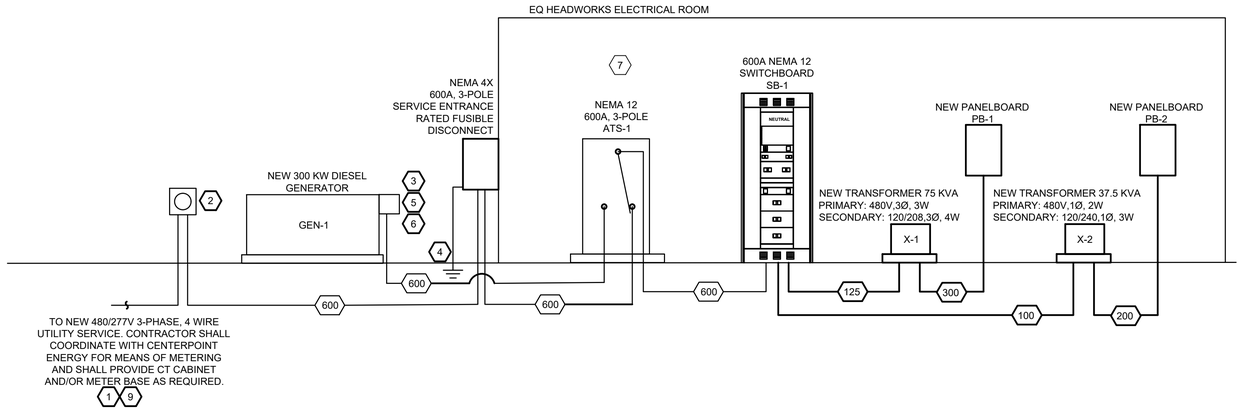

RISER DIAGRAM
SCALE: NTS

PLAN NOTES

1. THE CONTRACTOR IS TO COORDINATE WITH ELECTRIC UTILITY (CENTERPOINT ENERGY) TO INSTALL NEW 480/277 VAC, 3-PHASE, 600-AMP SERVICE.
2. ELECTRICAL CONTRACTOR TO PROVIDE METER BASE/CT CABINET AND MOUNTING AS REQUIRED BY LOCAL UTILITY. COORDINATE DURING BIDDING AND CONSTRUCTION.
3. PROVIDE GENERATOR INTEGRAL CIRCUIT BREAKER TO PROVIDE MEANS OF CURRENT PROTECTION AND DISCONNECTION AT THE GENERATOR.
4. PROVIDE TRIAD GROUNDING SYSTEM.
5. COORDINATE WITH GENERATOR AND ATS SUPPLIER/MANUFACTURER FOR WIRING REQUIREMENTS DURING BIDDING AND CONSTRUCTION.
6. DO NOT BOND NEUTRAL TO GROUND AT GENERATOR. VERIFY THAT THE NEUTRAL TO GROUND IS NOT BONDED AT GENERATOR BY THE GENERATOR MANUFACTURER. NEUTRAL TO BE BONDED TO GROUND AT AUTOMATIC TRANSFER SWITCH ONLY.
7. ATS SHALL BE DESIGNED FOR FRONT ACCESS AND LIMITED TO ONE SIDE ACCESS.
8. IT IS THE RESPONSIBILITY OF THE CONTRACTOR TO COORDINATE WITH THE GENERATOR SUPPLIER/MANUFACTURER FOR POWER REQUIREMENTS TO THE ANCILLARY DEVICES. ANCILLARY POWER REQUIREMENTS VARY BETWEEN GENERATOR MANUFACTURES. ALL COSTS ASSOCIATED WITH PROVIDING ANCILLARY POWER TO THE GENERATOR SHALL BE BY THE CONTRACTOR.
9. COORDINATE WITH UTILITY DURING BIDDING AND CONSTRUCTION ON TRANSFORMER TYPE (POLE MOUNTED TRANSFORMERS OR PAD MOUNT TRANSFORMER) FOR NEW UTILITY FEED. CONTRACTOR SHALL PROVIDE CONCRETE TRANSFORMER PAD AS APPLICABLE.

GENERAL NOTES:

1. SEE E0-0 FOR PROJECT CONDUIT REQUIREMENTS.
2. CONTRACTOR SHALL EXAMINE NOT ONLY PLANS AND SPECIFICATIONS FOR ELECTRICAL AND INSTRUMENTATION, BUT PLANS AND SPECIFICATIONS FOR OTHER RELATED SECTIONS. VISIT THE SITE TO BECOME ACQUAINTED WITH ALL PROJECT CONDITIONS INCLUDING EXISTING CONDITIONS. EXECUTION OF CONTRACT IS EVIDENCE THAT THE CONTRACTOR HAS EXAMINED ALL DRAWINGS AND SPECIFICATIONS AND THAT ALL CONDITIONS OF INSTALLING THE WORK IN THIS SECTION ARE VERIFIED. CLAIMS FOR LABOR, MATERIAL, OR TIME EXTENSIONS REQUIRED DUE TO DIFFICULTIES ENCOUNTERED, WHICH COULD HAVE BEEN FORESEEN HAD EXAMINATIONS BEEN MADE WILL NOT BE RECOGNIZED

FEEDER SCHEDULE

TYPE NO.	COPPER WIRE QUANTITIES & WIRE SIZE	CONDUIT	W/O NEUTRAL	SERVICE GROUND
15	4#12 & #12 GROUND	3/4"	3/4"	#8
20	4#12 & #12 GROUND	3/4"	3/4"	#8
30	4#10 & #10 GROUND	3/4"	3/4"	#8
50	4#8 & #10 GROUND	1"	1"	#8
65	4#6 & #8 GROUND	1-1/4"	1-1/4"	#8
85	4#4 & #8 GROUND	1-1/4"	1-1/4"	#8
100	4#3 & #8 GROUND	1-1/2"	1-1/4"	#8
115	4#2 & #6 GROUND	1-1/2"	1-1/2"	#8
130	4#1 & #6 GROUND	2"	1-1/2"	#6
150	4#1/0 & #6 GROUND	2"	2"	#6
175	4#2/0 & #6 GROUND	2"	2"	#4
200	4#3/0 & #6 GROUND	2-1/2"	2"	#4
225	4#4/0 & #4 GROUND	2-1/2"	2-1/2"	#2
250	4#250MCM & #4 GROUND	3"	2-1/2"	#2
300	4#350MCM & #3 GROUND	3"	3"	#2
380	4#500MCM & #3 GROUND	4"	4"	#1/0
420	4#600MCM & #2 GROUND	4"	4"	#1/0
460	(2 SETS)4#4/0 & #2 GROUND	2-1/2"	2-1/2"	#1/0
500	(2 SETS)4#250MCM & #2 GROUND	4"	3"	#1/0
600	(2 SETS)4#350MCM & #1 GROUND	4"	3"	#2/0
700	(2 SETS)4#500MCM & #1/0 GND	4"	4"	#2/0
800	(3 SETS)4#300MCM & #1/0 GND	3"	3"	#2/0
1000	(3 SETS) 4#500MCM & #2/0 GND	4"	4"	#3/0
1200	(4 SETS) 4#350 MCM & 33/0 GND	4"	4"	#3/0
1600	(5 SETS) 4#600 MCM & #3/0 GND	4"	3 1/2"	#3/0
2000	(6 SETS) 4#600MCM &# 3/0 GND	4"	3 1/2"	#3/0

ALL FEEDERS ARE ASSUMED TO BE 4 CURRENT CARRYING CONDUCTORS (3 PHASE CONDUCTORS AND 1 NEUTRAL) UNLESS NOTED OTHERWISE.

FEEDER KEY IS AS FOLLOWS (PARENTHESIS DENOTES SUBSCRIPT):
= 3 PHASES AND NEUTRAL WITH GROUND
###(N) = 3 PHASES, NO NEUTRAL WITH GROUND
###(2) = 2 PHASES AND NEUTRAL WITH GROUND
ALL CIRCUITS SHALL BE RUN IN PVC BELOW GROUND/PVC COATED RIGID ABOVE GROUND

GENERATOR

MINIMUM RATED CAPACITY: 300kW

BASIS OF DESIGN: MANUFACTURER: CUMMINS — MODEL: 300DQDAC, BCODE: B251

RATED VOLTAGE: 480/277 — 3-PHASE/4-WIRE

ENCLOSURE RATING: SEE SPECIFICATIONS — FUEL TYPE: DIESEL

FUEL TANK CAPACITY: 24 HOURS

SEE SPECIFICATIONS FOR ADDITIONAL FEATURES

AUTOMATIC TRANSFER SWITCH

TRANSFER SWITCH TYPE: AUTOMATIC — CURRENT RATING: 600A

RATED VOLTAGE: 480/277 3-PHASE/4-WIRE — # OF POLES: 3

NEUTRAL CONFIGURATION: SOLID — IN-SYNC TRANSFER: YES

MAIN CIRCUIT BREAKER: N/A — GROUND FAULT ON MAIN: NO

SERVICE ENTRANCE RATED: NO — REMOTE ANNUNCIATION: YES

BY-PASS/ISOLATION: NO — NEC LOAD BRANCH: 702 — KAIC: 42

SEE SPECIFICATIONS FOR ADDITIONAL FEATURES

NEMA RATING: 12 — CYCLE RATING: 3

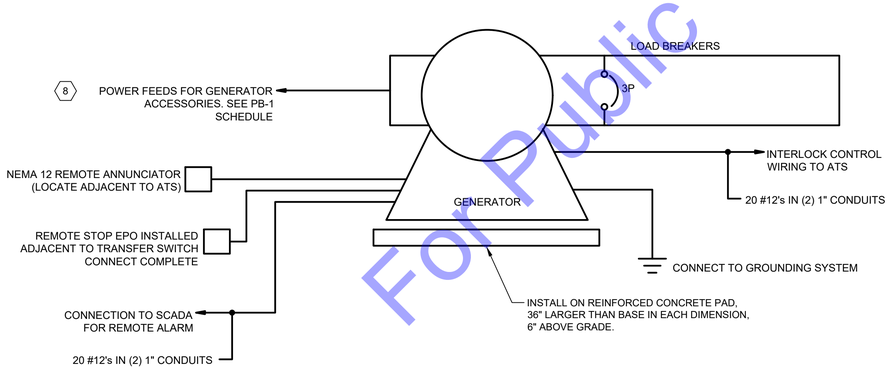

GENERATOR DETAIL

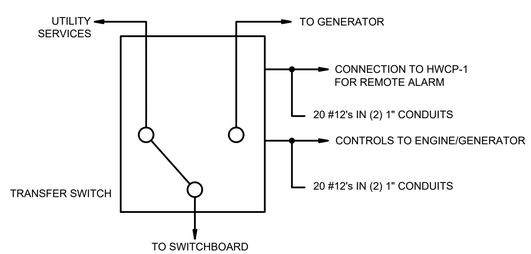

AUTOMATIC TRANSFER SWITCH

For Public Viewing Only-Not For Downloading

COMMONWEALTH ENGINEERS, INC.
A wealth of resources to master a common goal.
https://commonwealthengineers.com/

MICHAEL A. MIRANDE II
REGISTERED
No. 19800084
STATE OF INDIANA
PROFESSIONAL ENGINEER
Signature — 10/03/25 Date

TOWN OF NEWBURGH
WARRICK COUNTY, INDIANA

WASTEWATER TREATMENT PLANT
FLOW EQ BASIN

© 2025 BY COMMONWEALTH ENGINEERS, INC. ALL RIGHTS RESERVED. REPRODUCTION BY ANY MEANS IS UNLAWFUL OR IN PART WITHOUT PERMISSION IS PROHIBITED

Indiana 811 Know what's below. 811 before you dig. 1-800-382-5544 (ITS THE LAW)

No.	Submittal / Revision	By	Date

Designed By:	Drawn By:	Checked By:
REW	REW	MAM
Issue Date:	Project No:	Scale:
10/03/25	S18005-041	AS SHOWN

ELECTRICAL RISER

Drawing No:
E1-2
Sheet: 143 OF 161

File: Z:\SHARED\IN CLIENTS M-Z\NEWBURGH\S18005 QN CALL SERVER ENG SVCS\041 WWTP FLOW EQ BASIN\06 CADK MECH-ELECT\NEWBURGH EQ ELECTRICAL.DWG
Saved: 10/2/2025 5:47:44 PM Plotted: 10/2/2025 6:01:33 PM Current User: Regan Wakefield, El LastSavedBy: rwakefield

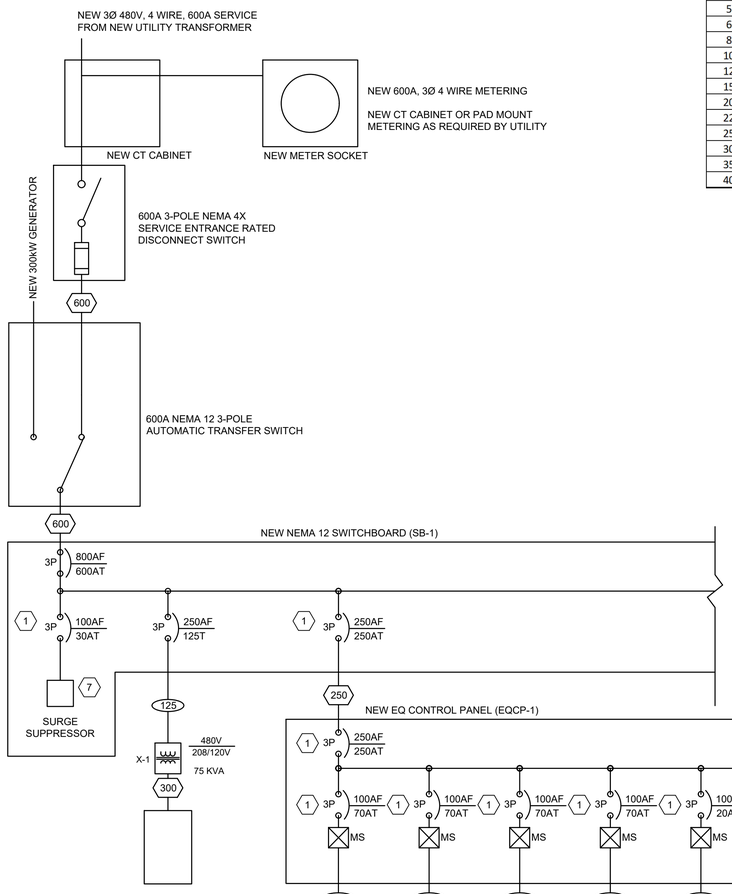

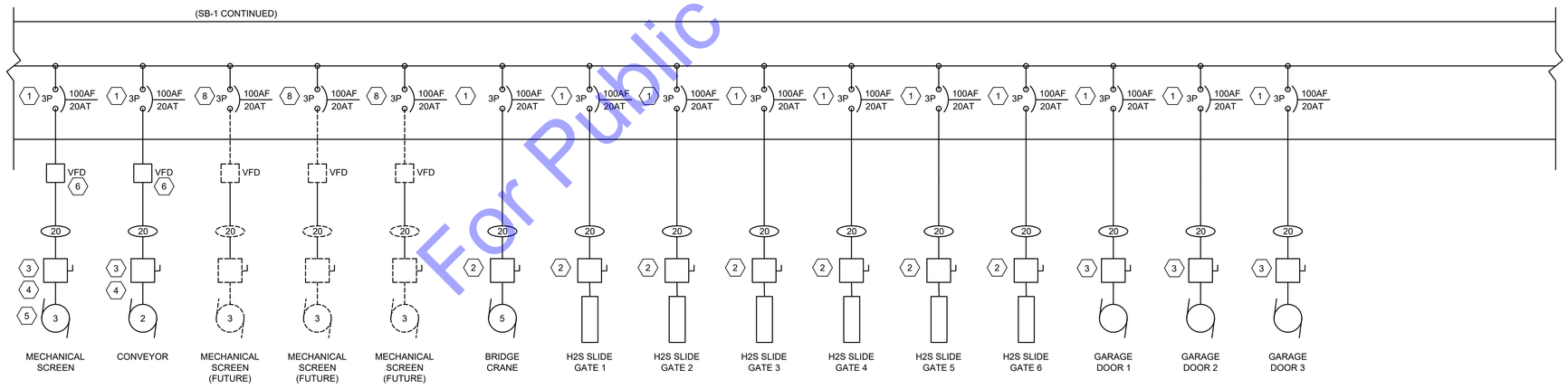

Load Wiring Schedule		
	Copper Wire	
Type #:	Quantity and Wire Size	Conduit
20	3 #12's & #12 Ground	3/4"
30	3 #10's & #10 Ground	3/4"
50	3 #8's & #10 Ground	3/4"
60	3 #6's & #8 Ground	3/4"
80	3 #4's & #8 Ground	1"
100	3 #2's & #6 Ground	1.5"
125	3#1's & #6 Ground	1.5"
150	3 - 2/0 & #6 Ground	2"
200	3 - 3/0 & #6 Ground	2"
225	3 - 4/0 & #4 Ground	2.5"
250	3 #250MCM & #4 Ground	3"
300	3 #350MCM & #3 Ground	3"
350	3 #500MCM & #3 Ground	4"
400	3 #500MCM & #3 Ground	4"

Panel Name:	PB-1			Panel Amperage:	400A	
Voltage & Phase:	120/208V 3-Phase			Panel A.I.C. Rating:	10kAIC	
Mounting:	Surface			Other:	MCB/300A	
Description	Brk	Phase		Brk	Description	
GENERATOR ANCILLARY DEVICES	20	1 A	2	20	HEADWORKS EXTERIOR LIGHTING	
GENERATOR ANCILLARY DEVICES	20	3 B	4	20	HEADWORKS RECEPTACLES	
GENERATOR ANCILLARY DEVICES	20	5 C	6	20	HEADWORKS ELECTRICAL ROOM LIGHTING	
GENERATOR ANCILLARY DEVICES	30	7 A	8	20	HEADWORKS INTERIOR LIGHTING	
GENERATOR ANCILLARY DEVICES	-	9 B	10	20	HEADWORKS INTERIOR LIGHTING	
EF-5	20	11 C	12	20	HEADWORKS INFLUENT STRUCTURE LIGHTING	
FCU-1	20	13 A	14	20	HEADWORKS RECEPTACLES	
FCU-1	-	15 B	16	20	HEADWORKS RECEPTACLES	
HP-1	20	17 C	18	20	HEADWORKS ELECTRICAL ROOM RECEPTACLES	
HP-1	-	19 A	20	20	HEADWORKS INFLUENT STRUCTURE RECEPTACLES	
EUH-1 FAN MOTOR	20	21 B	22	20	HEADWORKS STORAGE AREA RECEPTACLES	
EUH-2 FAN MOTOR	20	23 C	24	20	SAMPLER RECEPTACLE	
EUH-3 FAN MOTOR	20	25 A	26	20	SAMPLER ROOM LIGHTING	
EUH-4 FAN MOTOR	20	27 B	28	20	HEADWORKS SCREENING AREA RECEPTACLES	
FCU-2	20	29 C	30	30	LIGHTING INVERTER	
FCU-2	-	31 A	32	20	DAMPER ACTUATORS (DA-1,2,3)	
HP-2	20	33 B	34	20	INSTRUMENTATION	
HP-2	-	35 C	36	20	HEAT TRACE	
HWCP-1	20	37 A	38	20	HEAT TRACE	
SCREEN CONTROL PANEL	20	39 B	40	20	HEAT TRACE	
CONVEYOR LOCAL CONTROL STATION	20	41 C	42	20	HEAT TRACE	
SCREEN LOCAL CONTROL STATION	20	43 A	44	20	SCREEN SOLENOIDS	
SITE LIGHTING	20	45 B	46	20	SPARE	
SPARE	20	47 C	48	20	SPARE	
SPARE	20	49 A	50	20	SPARE	
SPACE		51 B	52		SPACE	
SPACE		53 C	54		SPACE	

GENERAL NOTES:

REFER TO E0.0 FOR PROJECT CONDUIT REQUIREMENTS.

CONTRACTOR SHALL EXAMINE NOT ONLY PLANS AND SPECIFICATIONS FOR ELECTRICAL AND INSTRUMENTATION, BUT PLANS AND SPECIFICATIONS FOR OTHER RELATED SECTIONS. VISIT THE SITE TO BECOME ACQUAINTED WITH ALL PROJECT CONDITIONS INCLUDING EXISTING CONDITIONS. EXECUTION OF CONTRACT IS EVIDENCE THAT THE CONTRACTOR HAS EXAMINED ALL DRAWINGS AND SPECIFICATIONS AND THAT ALL CONDITIONS OF INSTALLING THE WORK IN THIS SECTION ARE VERIFIED. CLAIMS FOR LABOR, MATERIAL, OR TIME EXTENSIONS REQUIRED DUE TO DIFFICULTIES ENCOUNTERED, WHICH COULD HAVE BEEN FORESEEN HAD EXAMINATIONS BEEN MADE WILL NOT BE RECOGNIZED.

PLAN NOTES:

1. COORDINATE WITH THE CONTRACTOR AND EQUIPMENT SUPPLIERS WHEN SELECTING THE CIRCUIT BREAKER SIZES TO ENSURE PROPER SIZING. PROVIDE BREAKERS WITH THE MEANS FOR LOCKOUT/TAGOUT.
2. CONTRACTOR TO PROVIDE NEMA 4X STAINLESS STEEL DISCONNECT SIZED AS REQUIRED FOR THE LOAD PER NEC.
3. CONTRACTOR TO PROVIDE NEMA 7 EXPLOSION PROOF DISCONNECT SIZED AS REQUIRED FOR THE LOAD PER NEC.
4. DISCONNECTS FOR VFD'S SHALL HAVE AUXILIARY CONTACT SWITCH TO OPEN VFD SAFETY CIRCUIT WHEN DISCONNECT IS OPENED.
5. WIRE SCREEN SAFETIES AS REQUIRED. REFERENCE DS SPECIFICATIONS AND COORDINATE WITH CONTRACTOR DURING BIDDING AND CONSTRUCTION. PROVIDE SAFETY RELAYS AS REQUIRED; INCORPORATE SAFETIES INTRO ASSOCIATED CONTROL PANEL.
6. PROVIDE ALLEN BRADLEY LINE TERMINATORS ON ALL VFD's THAT ARE NOT ACTIVE FRONT END DRIVES. COORDINATE WITH VFD SUPPLIER FOR PROPER COMPONENT SELECTION.
7. MOUNT SURGE SUPPRESSOR ADJACENT TO SWITCHBOARD PER SURGE SUPPRESSOR MANUFACTURER INSTRUCTIONS.
8. CONTRACTOR SHALL PROVIDE THREE (3) 3P 20AT BREAKERS IN SB-1 IN PREPARATION FOR INSTALLATION OF THREE ADDITIONAL BAR SCREENS IN FUTURE.

For Public Viewing Only-Not For Downloading

COMMONWEALTH ENGINEERS, INC.
A wealth of resources to master a common goal.
https://commonwealthengineers.com/

MICHAEL A. MIRANDE II
REGISTERED
No. 19800084
STATE OF INDIANA
PROFESSIONAL ENGINEER

Signature 10/03/25 Date

TOWN OF NEWBURGH
WARRICK COUNTY, INDIANA

WASTEWATER TREATMENT PLANT
FLOW EQ BASIN

© 2025 BY COMMONWEALTH ENGINEERS, INC. ALL RIGHTS RESERVED. REPRODUCTION BY ANY METHOD, IN WHOLE OR IN PART WITHOUT PERMISSION IS PROHIBITED

Indiana 811 Know what's below. 811 before you dig. 1-800-382-5544 (ITS THE LAW)

No.	Submittal / Revision	By	Date

Designed By:	Drawn By:	Checked By:
REW	REW	MAM
Issue Date: 10/03/25	Project No: S18005-041	Scale: AS SHOWN

ELECTRICAL ONE LINE - NEW HEADWORKS

Drawing No: E1-3

Sheet: 144 OF 161

File: Z:\SHARED\IN CLIENTS M-Z\NEW\BURGH\S18005 ON CALL SEWER ENG S\VCS\041 WWTP FLOW EQ BASIN\06 CADN MECH-ELECT\NEW\BURGH EQ ELECTRICAL.DWG
Saved: 10/2/2025 5:47:44 PM Plotted: 10/2/2025 6:01:37 PM Current User: Regan Wakefield, E1 LastSavedBy: rwakefield

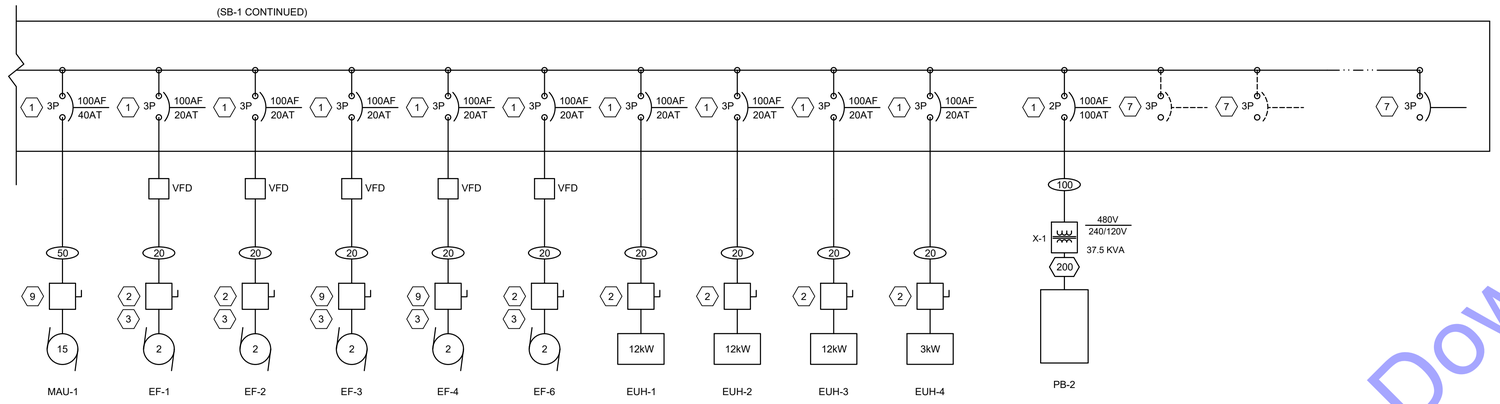

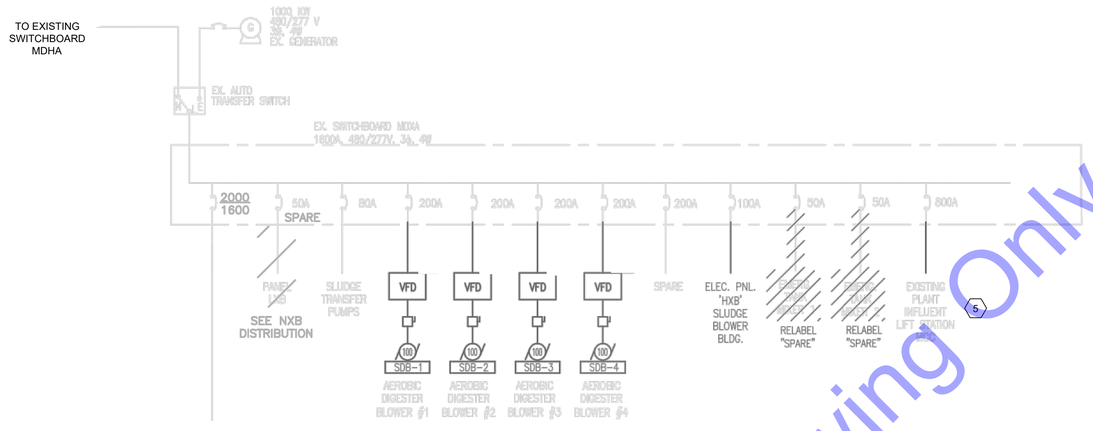

EXISTING ONE-LINE (2008 AS-BUILTS)
SCALE: NTS

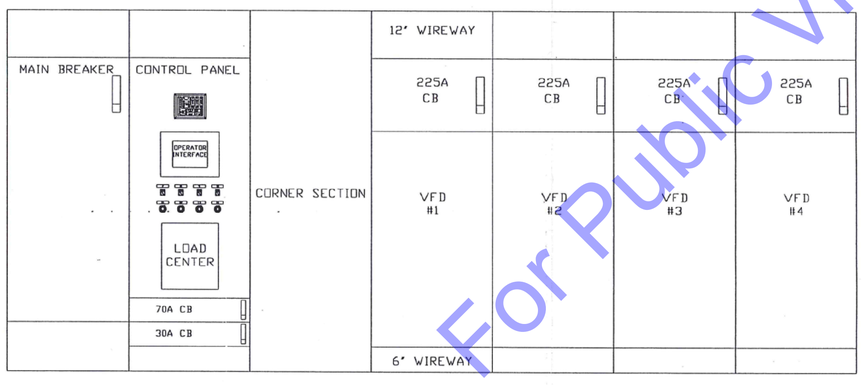

4 5

EXISTING LS #3 MCC (2008 AS-BUILTS)
SCALE: NTS

6 8

VOLTAGE: 208/120 | PHASE: 3 | WIRE: 4 | MAIN: MCB | MCB AMPS: 100 | BUS AMPS: 100

12 Ex. Plant Lift Station

MOUNTING: Flush | NEUTRAL: 100% | IG: NO | AIC: 10,000

SECTION 1 of 1

LOAD DESCRIPTION	TP	LOAD	CKT	OCP	PH	OCP	CKT	LOAD	TP	LOAD DESCRIPTION
Control			1	20A	A	20A	2			Lights
Heater			3	20A	B	20A	4			A/C
A/C			5	20A	C		6			
			7		A	20A	8			Conversion
Pit Lites			9	20A	B	20A	10			Phone Dialer
Outside Receptacles			11	20A	C	20A	12			
Flow Meter			13	20A	A	20A	14			
			15	20A	B	20A	16			
			17	20A	C	20A	18			
Pole Light			19	20A	A	20A	20			Blower
			21	20A	B	20A	22			
			23	20A	C	20A	24			
			25	20A	A	20A	26			
			27	20A	B	20A	28			
			29	20A	C	20A	30			
			31	20A	A	20A	32			
			33	20A	B	20A	34			
			35	20A	C	20A	36			
			37	20A	A	20A	38			
			39	20A	B	20A	40			
			41	20A	C	20A	42			

PHASE TOTALS: A: 0.00 | B: 0.00 | C: 0.00

LOAD TYPE (TP) Nonsimultaneous = 0	Lighting	Receptacle	Motor	Largest Motor	Heat	Kitchen	Other
TOTAL SECTION 1:	0.0	0.0	0.0	0.0	0.0	0.0	0.0
ALL SECTIONS:							
DEMAND FACTOR:	1.00	Calculation	1.00	1.25	1.00	1.00	1.00
DEMAND:	0.0	0.0	0.0	0.0	0.0	0.0	0.0

DEMAND KVA: 0.0 | DEMAND AMPS: 0

EXISTING PANEL SCHEDULE (2008 AS-BUILTS)
SCALE: NTS

GENERAL NOTES:

REFER TO E0.0 FOR PROJECT CONDUIT REQUIREMENTS.

EXISTING EQUIPMENT SHOWN LIGHTER.

CONTRACTOR SHALL EXAMINE NOT ONLY PLANS AND SPECIFICATIONS FOR ELECTRICAL AND INSTRUMENTATION, BUT PLANS AND SPECIFICATIONS FOR OTHER RELATED SECTIONS. VISIT THE SITE TO BECOME ACQUAINTED WITH ALL PROJECT CONDITIONS INCLUDING EXISTING CONDITIONS. EXECUTION OF CONTRACT IS EVIDENCE THAT THE CONTRACTOR HAS EXAMINED ALL DRAWINGS AND SPECIFICATIONS AND THAT ALL CONDITIONS OF INSTALLING THE WORK IN THIS SECTION ARE VERIFIED. CLAIMS FOR LABOR, MATERIAL, OR TIME EXTENSIONS REQUIRED DUE TO DIFFICULTIES ENCOUNTERED, WHICH COULD HAVE BEEN FORESEEN HAD EXAMINATIONS BEEN MADE WILL NOT BE RECOGNIZED.

EXISTING EQUIPMENT LAYOUT HAS BEEN TAKEN FROM 2008 COMMONWEALTH ENGINEERS, INC. "WASTEWATER TREATMENT PLANT EXPANSION PROJECT" AS-BUILTS. CONTRACTOR SHALL VISIT SITE DURING BIDDING TO CONFIRM EXISTING SITE CONDITIONS; EXECUTION OF CONTRACT IS EVIDENCE THAT THE CONTRACTOR HAS VERIFIED EXISTING SITE CONDITIONS. CONTRACTOR SHALL VERIFY EXISTING SWITCHBOARD/PANEL BOARD MODEL, SECTION RATINGS, AND PHYSICAL SPACE PRIOR TO ORDERING NEW EQUIPMENT.

PLAN NOTES:

1. COORDINATE WITH THE CONTRACTOR AND EQUIPMENT SUPPLIERS WHEN SELECTING THE CIRCUIT BREAKER SIZES TO ENSURE PROPER SIZING. PROVIDE BREAKERS WITH THE MEANS FOR LOCKOUT/TAGOUT.
2. CONTRACTOR SHALL PROVIDE AND INSTALL NEMA 7 EXPLOSION PROOF DISCONNECT SIZED AS REQUIRED FOR THE LOAD PER NEC.
3. DISCONNECTS FOR VFD'S SHALL HAVE AUXILIARY CONTACT SWITCH TO OPEN VFD SAFETY CIRCUIT WHEN DISCONNECT IS OPENED.
4. EXISTING LS #3 RTU SHALL BE UPGRADED IN PLACE THIS PROJECT. COORDINATE WITH SYSTEM INTEGRATOR.
5. CONTRACTOR SHALL PROVIDE AND INSTALL TWO (2) NEW 3P 20AT CIRCUIT BREAKERS IN EXISTING LS #3 MCC FOR 480V POWER FEED TO NEW LS #3 ACTUATED PLUG VALVES. CONTRACTOR SHALL PROVIDE AND INSTALL CONDUIT AND WIRE.
6. CONTRACTOR SHALL PROVIDE AND INSTALL ONE (1) NEW 1P 20AT CIRCUIT BREAKER IN EXISTING LS #3 120V PANEL FOR POWER FEED TO LS #3 SUMP PUMP. CONTRACTOR SHALL PROVIDE AND INSTALL CONDUIT AND WIRE.
7. CONTRACTOR SHALL PROVIDE SPACE FOR FUTURE BREAKERS FOR GRIT EQUIPMENT. CONTRACTOR SHALL ENSURE AT LEAST 20% SPACE FOR SPARE BREAKERS IS PROVIDED.
8. CONTRACTOR SHALL PROVIDE AND INSTALL ONE (1) NEW 1P 20AT CIRCUIT BREAKER IN EXISTING LS #3 120V PANEL FOR POWER FEED TO NEW LASER FLOW METER. CONTRACTOR SHALL PROVIDE AND INSTALL CONDUIT AND WIRE. FLOW SIGNAL SHALL BE LANDED IN RENOVATED LS #3 RTU.
9. CONTRACTOR SHALL PROVIDE AND INSTALL NEMA 4X STAINLESS STEEL DISCONNECT SIZED AS REQUIRED FOR THE LOAD PER NEC.

Panel Name: PB-2		Panel Amperage: 200A			
Voltage & Phase: 120/240 - 1Φ		Panel A.I.C. Rating: 10kAIC			
Mounting: Surface		Other: MCB / 200A			
Description	Brk	Phase	Brk	Description	
BUILDING M SUB FEED	100	1 A 2	60	BUILDING L SUB FEED	
BUILDING M SUB FEED	-	3 B 4	-	BUILDING L SUB FEED	
SUMP PUMPS	20	5 A 6	20	DAVIT CRANES	
ELECTRIC FENCE GATE	20	7 B 8	20	SMOKE DETECTOR	
SPARE	20	9 A 10	20	SPARE	
SPARE	20	11 B 12	20	SPARE	
SPARE	20	13 A 14	20	SPARE	
		15 B 16			
		17 A 18			
		19 B 20			
		21 A 22			
		23 B 24			
		25 A 26			
		27 B 28			
		29 A 30			
		31 B 32			
		33 A 34			
		35 B 36			
		37 A 38			
		39 B 40			
		41 A 42			

120/240 PB-2 PANEL SCHEDULE
SCALE: NTS

For Public Viewing Only-Not For Downloading

COMMONWEALTH ENGINEERS, INC.
A wealth of resources to master a common goal.
https://commonwealthengineers.com/

MICHAEL A. MIRANDE II
REGISTERED
No. 19800084
STATE OF INDIANA
PROFESSIONAL ENGINEER

Signature 10/03/25 Date

TOWN OF NEWBURGH
WARRICK COUNTY, INDIANA

WASTEWATER TREATMENT PLANT
FLOW EQ BASIN

© 2025 BY COMMONWEALTH ENGINEERS, INC. ALL RIGHTS RESERVED. REPRODUCTION BY ANY METHOD, IN WHOLE OR IN PART WITHOUT PERMISSION IS PROHIBITED

Indiana 811 Know what's below. 811 before you dig. 1-800-382-5544 (ITS THE LAW)

No.	Submittal / Revision	By	Date

Designed By:	Drawn By:	Checked By:
REW	REW	MAM
Issue Date: 10/03/25	Project No: S18005-041	Scale: AS SHOWN

ELECTRICAL ONE LINE - LS3

Drawing No: E1-4

Sheet: 145 OF 161

File: Z:\SHARED\IN CLIENTS M-Z\NEWBURGH\S18005 ON CALL SEWER ENG SVC\S041 WWTP FLOW EQ BASIN\06 CADM-MECH-ELECTNEWBURGH EQ ELECTRICAL.DWG
Saved: 10/2/2025 5:47:44 PM Plotted: 10/2/2025 6:01:42 PM Current User: Regan Wakefield, E1 LastSavedBy: rwakefield

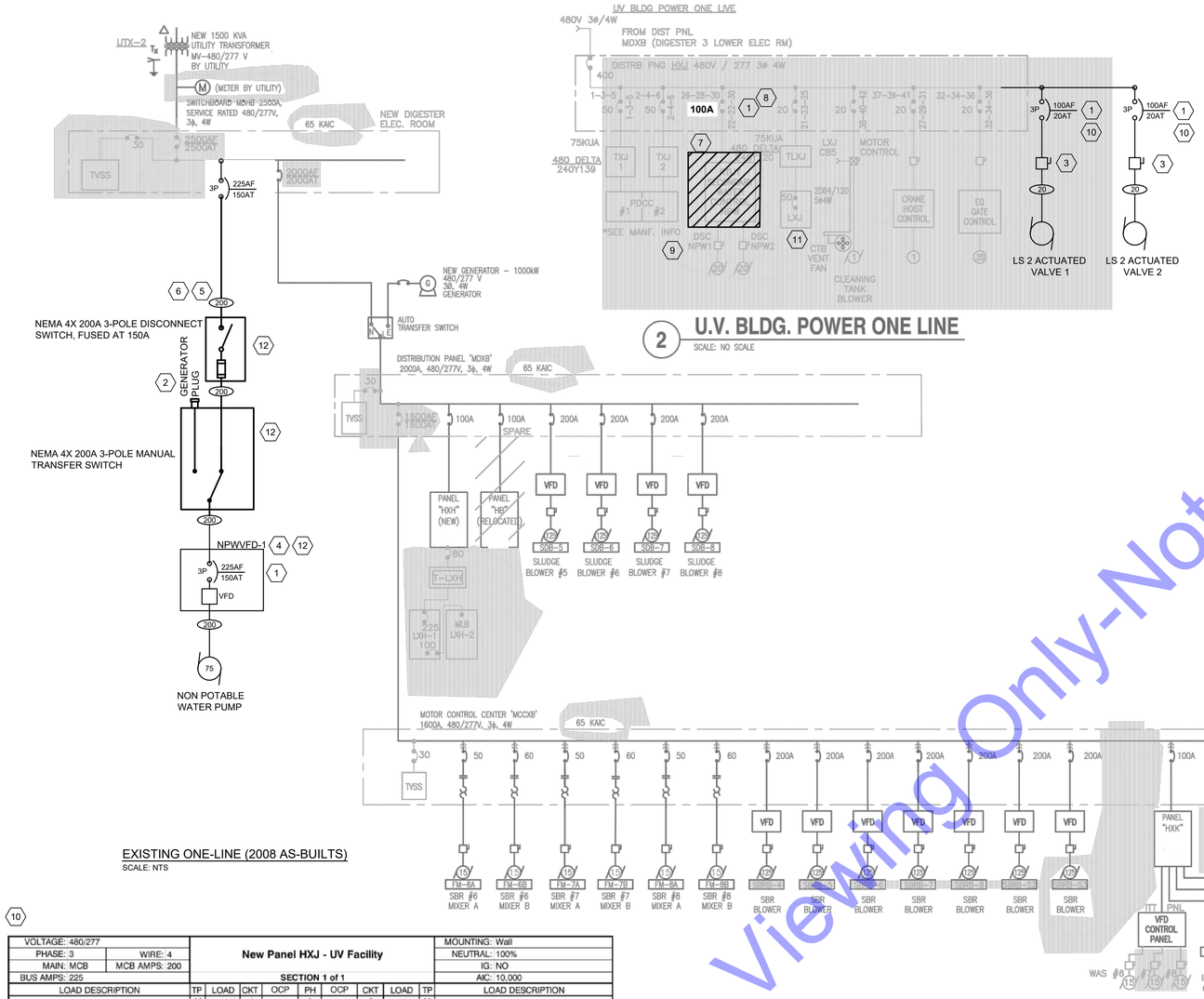

2 U.V. BLDG. POWER ONE LINE
SCALE: NO SCALE

EXISTING ONE-LINE (2008 AS-BUILTS)
SCALE: NTS

10

VOLTAGE: 480/277		New Panel HXJ - UV Facility								MOUNTING: Wall
PHASE: 3	WIRE: 4									NEUTRAL: 100%
MAIN: MCB	MCB AMPS: 200									IG: NO
BUS AMPS: 225		SECTION 1 of 1								AIC: 10,000

LOAD DESCRIPTION	TP	LOAD	CKT	OCP	PH	OCP	CKT	LOAD	TP	LOAD DESCRIPTION
NPW Secondary Control Panel	M	11 KVA	1	60A	A	75A	2	13 KVA	M	UV Channel No. 2 XFMR
	M	11 KVA	3		B		4	13 KVA	M	
	M	11 KVA	5		C		6	13 KVA	M	
UV Channel No. 1 XMFR	M	13 KVA	7	75A	A	20A	8		M	Electric Hoist
	M	13 KVA	9		B		10	2 KVA	M	
	M	13 KVA	11		C		12		M	
	M		13		A		14			
Cleaning Tank Blower	M	2 KVA	15	20A	B	20A	16	15 KVA		HXJ XFMR - LXJ
	M		17		C		18			
FLOW EQ TANK MOV			19	20A	A	100A	20			
			21		B	20A	22			
			23		C	20A	24			
			25	20A	A	20A	26			
			27	20A	B	20A	28			
			29	20A	C	20A	30			
			31	20A	A	20A	32			
			33	20A	B	20A	34			
			35	20A	C	20A	36			
			37	20A	A	20A	38			
			39	20A	B	20A	40			
			41	20A	C	20A	42			

PHASE TOTALS A: 0.00 B: 0.00 C: 0.00

LOAD TYPE (TP) Nonsimultaneous = 0	Lighting	Receptacle	Motor	Largest Motor	Heat	Kitchen	Other
TOTAL SECTION 1:	0.0	0.0	0.0	0.0	0.0	0.0	0.0
ALL SECTIONS:							
DEMAND FACTOR:	1.00	Calculation	1.00	1.25	1.00	1.00	1.00
DEMAND:	0.0	0.0	0.0	0.0	0.0	0.0	0.0

DEMAND KVA: 0.0 DEMAND AMPS: 0

11

VOLTAGE: 208/120		NEW PANEL LXJ - UV FACILITY								MOUNTING: Flush
PHASE: 3	WIRE: 4									NEUTRAL: 100%
MAIN: MCB	MCB AMPS: 50A									IG: NO
BUS AMPS: 100		SECTION 1 of 1								AIC: 30,000

LOAD DESCRIPTION	TP	LOAD	CKT	OCP	PH	OCP	CKT	LOAD	TP	LOAD DESCRIPTION
FLOW EQUAL TNK RECEPTS.		0.6	1	20A	A	20A	2	1.4		UV BLDG. LIGHTS
UV BLDG. RECEPTS		0.6	3	20A	B	20A	4			
			5	20A	C	20A	6			
			7	20A	A	20A	8			
			9	20A	B	20A	10			
			11	20A	C	20A	12			
			13	20A	A	20A	14			
			15	20A	B	20A	16			
			17	20A	C	20A	18			
			19	20A	A	20A	20			
			21	20A	B	20A	22			
			23	20A	C	20A	24			

PHASE TOTALS A: 2.00 B: 0.60 C: 0.00

LOAD TYPE (TP) Nonsimultaneous = 0	Lighting	Receptacle	Motor	Largest Motor	Heat	Kitchen	Other
TOTAL SECTION 1:	0.0	0.0	0.0	0.0	0.0	0.0	0.0
ALL SECTIONS:							
DEMAND FACTOR:	1.00	Calculation	1.00	1.25	1.00	1.00	1.00
DEMAND:	0.0	0.0	0.0	0.0	0.0	0.0	0.0

DEMAND KVA: 0.0 DEMAND AMPS: 0

EXISTING PANEL SCHEDULES (2008 AS-BUILTS)
SCALE: NTS

GENERAL NOTES:

REFER TO E0.0 FOR PROJECT CONDUIT REQUIREMENTS.

EXISTING EQUIPMENT SHOWN LIGHTER.

CONTRACTOR SHALL EXAMINE NOT ONLY PLANS AND SPECIFICATIONS FOR ELECTRICAL AND INSTRUMENTATION, BUT PLANS AND SPECIFICATIONS FOR OTHER RELATED SECTIONS. VISIT THE SITE TO BECOME ACQUAINTED WITH ALL PROJECT CONDITIONS INCLUDING EXISTING CONDITIONS. EXECUTION OF CONTRACT IS EVIDENCE THAT THE CONTRACTOR HAS EXAMINED ALL DRAWINGS AND SPECIFICATIONS AND THAT ALL CONDITIONS OF INSTALLING THE WORK IN THIS SECTION ARE VERIFIED. CLAIMS FOR LABOR, MATERIAL, OR TIME EXTENSIONS REQUIRED DUE TO DIFFICULTIES ENCOUNTERED, WHICH COULD HAVE BEEN FORESEEN HAD EXAMINATIONS BEEN MADE WILL NOT BE RECOGNIZED.

EXISTING EQUIPMENT LAYOUT HAS BEEN TAKEN FROM 2008 COMMONWEALTH ENGINEERS, INC. "WASTEWATER TREATMENT PLANT EXPANSION PROJECT" AS-BUILTS. CONTRACTOR SHALL VISIT SITE DURING BIDDING TO CONFIRM EXISTING SITE CONDITIONS; EXECUTION OF CONTRACT IS EVIDENCE THAT THE CONTRACTOR HAS VERIFIED EXISTING SITE CONDITIONS. CONTRACTOR SHALL VERIFY EXISTING SWITCHBOARD/PANEL BOARD MODEL, SECTION RATINGS, AND PHYSICAL SPACE PRIOR TO ORDERING NEW EQUIPMENT.

PLAN NOTES:

1. COORDINATE WITH THE CONTRACTOR AND EQUIPMENT SUPPLIERS WHEN SELECTING THE CIRCUIT BREAKER SIZES TO ENSURE PROPER SIZING. PROVIDE BREAKERS WITH THE MEANS FOR LOCKOUT/TAGOUT.
2. CONTRACTOR SHALL COORDINATE WITH OWNER TO ENSURE PROVIDED GENERATOR PLUG IS COMPATIBLE WITH EXISTING PORTABLE GENERATOR.
3. CONTRACTOR SHALL PROVIDE AND INSTALL NEMA 4X STAINLESS STEEL DISCONNECT SIZED AS REQUIRED FOR THE LOAD PER NEC.
4. ALL VFD PANELS ARE TO BE PROVIDED WITH A NEMA 4X STAINLESS STEEL A/C UNIT, SIZED ACCORDINGLY. PROVIDE HEAT LOAD CALCULATIONS WITH SUBMITTAL.
5. CONTRACTOR SHALL SIZE WIRE TO ENSURE VOLTAGE DROP DOES NOT EXCEED A MAXIMUM OF 3%. 3 - 3/0 & 1 #6 G SHOWN IS BASED UPON A THREE PHASE, 460V, 100A CIRCUIT OF 900 FEET. CONTRACTOR IS RESPONSIBLE FOR WIRE SIZE BASED UPON CONDUIT ROUTING AND LENGTH OF FINAL WIRE RUN AND SHALL UPSIZE WIRE IF FINAL ROUTING EXCEEDS 900 FEET. CONTRACTOR IS RESPONSIBLE FOR ANY COSTS INCURRED BY INCREASED WIRE SIZE.
6. EXISTING P055 3" C IS AVAILABLE FOR CONTRACTOR USE FOR POWER FEED TO NEW NPW PUMP. REFER TO SITE PLAN FOR ADDITIONAL DETAILS ON CONDUIT LOCATION. CONTRACTOR IS RESPONSIBLE FOR PROVIDING AND INSTALLING NEW CONDUIT FROM EXISTING HAND HOLE TO SWITCHBOARD MDHB AND FROM EXISTING HAND HOLE TO NEW NPW PUMP. CONDUIT P055 CONTAINS EXISTING 3-400KCMIL & #2 G; CONTRACTOR SHALL ENSURE CONDUIT FILL DOES NOT EXCEED 40% PER NEC.

MANDATORY ALTERNATE #3: CONTRACTOR SHALL PROVIDE ALL NEW CONDUIT FOR COMPLETE RUN FROM MDHB TO NEW NON POTABLE WATER PUMP FOR PUMP POWER FEED.

7. NEW RTU 7 (NON POTABLE WATER RTU) SHALL BE PROVIDED THIS PROJECT. EXISTING RTU SHALL BE CONVERTED TO JUNCTION BOX; EXISTING POWER AND CONTROL WIRING SHALL BE EXTENDED FROM EXISTING RTU 7 TO NEW RTU 7 LOCATION. CONTRACTOR SHALL PROVIDE NEW CONDUIT AND WIRING AS REQUIRED FOR EXTENSION. EXISTING NPW PUMPS, PUMP DISCONNECTS, INSTRUMENTATION, ETC. SHALL REMAIN.
8. CONTRACTOR SHALL VERIFY EXISTING BREAKER IN HXJ IS SIZED APPROPRIATELY FOR NEW RTU 7. COORDINATE WITH SYSTEM INTEGRATOR. CONTRACTOR IS RESPONSIBLE FOR PROVIDING AND INSTALLING NEW 3P BREAKER IN HXJ IF EXISTING IS INSUFFICIENT.
9. CONTRACTOR SHALL PROVIDE NEW 25HP VFDS FOR EXISTING NPW PUMPS. NEW VFDS SHALL BE INSTALLED WITHIN NEW RTU 7.
10. CONTRACTOR SHALL PROVIDE AND INSTALL TWO (2) NEW 3P 20AT CIRCUIT BREAKERS IN EXISTING HXJ PANEL FOR 480V POWER FEED TO NEW LS #2 ACTUATED PLUG VALVES. CONTRACTOR SHALL PROVIDE AND INSTALL CONDUIT AND WIRE.
11. CONTRACTOR SHALL PROVIDE AND INSTALL ONE (1) NEW 1P 20AT CIRCUIT BREAKER IN EXISTING LXJ PANEL FOR POWER FEED TO LS #2 SUMP PUMP. CONTRACTOR SHALL PROVIDE AND INSTALL CONDUIT AND WIRE.
12. NEW DISCONNECT, MTS, NPWVFD-1, AND RTU SHALL BE MOUNTED AT EXISTING UV STRUCTURE UNDER ROOF. CONTRACTOR SHALL PROVIDE UNISTRUT AND ASSOCIATED MOUNTING HARDWARE. COORDINATE WITH OWNER FOR EXACT FINAL LOCATION.

For Public Viewing Only-Not For Downloading

COMMONWEALTH ENGINEERS, INC.
A wealth of resources to master a common goal.
https://commonwealthengineers.com/

MICHAEL A. MIRANDE II REGISTERED No. 19800064 STATE OF INDIANA PROFESSIONAL ENGINEER
Signature 10/03/25 Date

TOWN OF NEWBURGH
WARRICK COUNTY, INDIANA

WASTEWATER TREATMENT PLANT
FLOW EQ BASIN

© 2025 BY COMMONWEALTH ENGINEERS, INC. ALL RIGHTS RESERVED. REPRODUCTION IN WHOLE OR IN PART WITHOUT PERMISSION IS PROHIBITED

Indiana 811 Know what's below. 811 before you dig. 1-800-382-5544 (ITS THE LAW)

No.	Submittal / Revision	By	Date

Designed By: REW	Drawn By: REW	Checked By: MAM
Issue Date: 10/03/25	Project No: S18005-041	Scale: AS SHOWN

ELECTRICAL ONE LINE - UV

Drawing No: E1-5
Sheet: 146 OF 161

File: Z:\SHARED\IN CLIENTS M-Z\NEWBURGH\S18005 ON CALL SEWER ENG SVC\S041 WWTP FLOW EQ BASIN\05 CADK MECH-ELEC\TNEWBURGH EQ ELECTRICAL.DWG
Saved: 10/2/2025 5:47:44 PM Plotted: 10/2/2025 6:04:32 PM Current User: Regan Wakefield E1 LastSavedBy: rwakefield

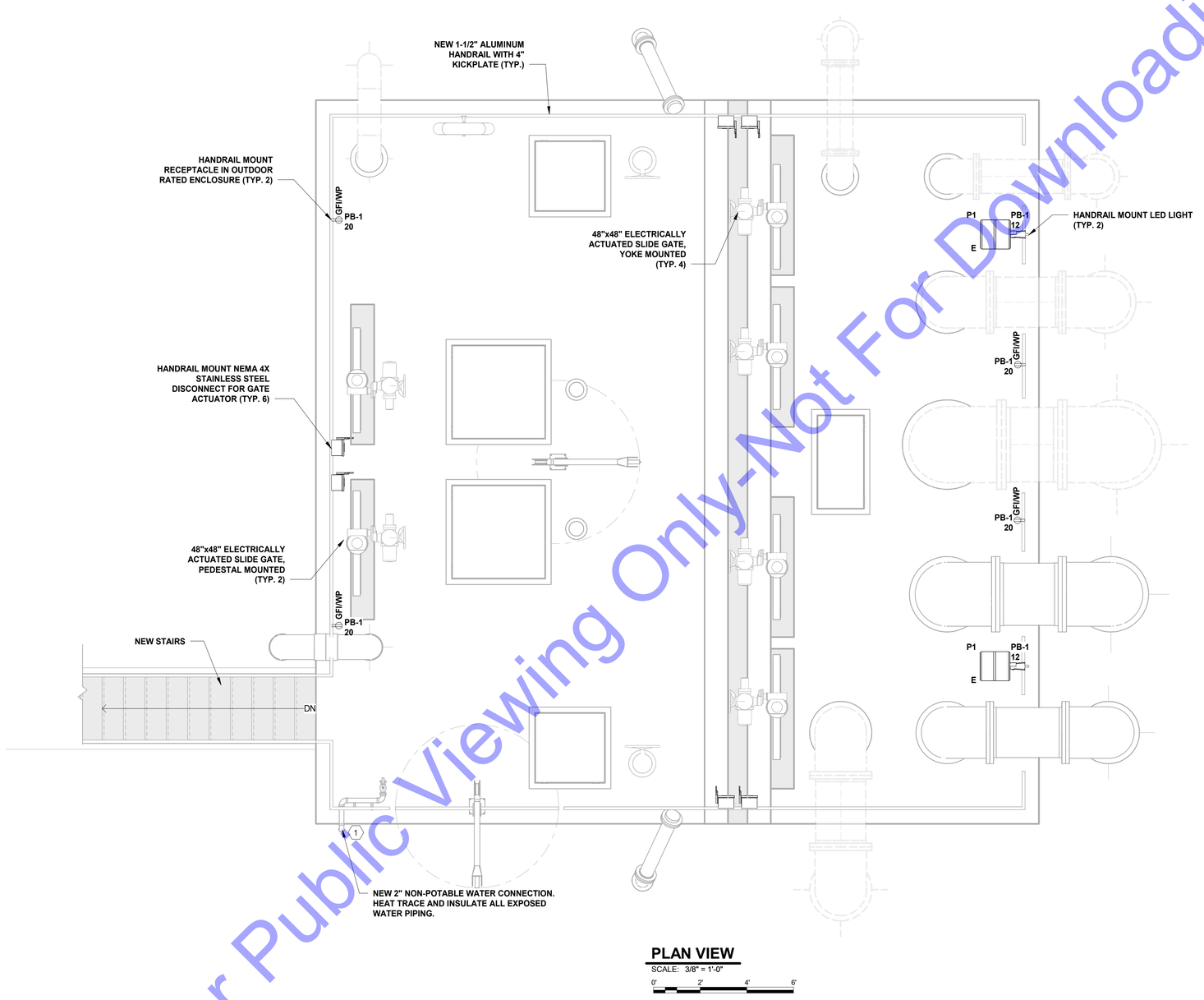

PLAN VIEW

SCALE: 3/8" = 1'-0"

0' 2' 4' 6'

SHEET NOTES

1. CONTRACTOR SHALL EXAMINE NOT ONLY PLANS AND SPECIFICATIONS FOR ELECTRICAL INSTRUMENTATION, BUT ALSO PLANS AND SPECIFICATIONS FOR OTHER RELATED SECTIONS. VISIT THE SITE TO BECOME ACQUAINTED WITH ALL PROJECT CONDITIONS INCLUDING EXISTING CONDITIONS. EXECUTION OF CONTRACT IS EVIDENCE THAT THE CONTRACTOR HAS EXAMINED ALL DRAWINGS AND SPECIFICATION AND THAT ALL CONDITIONS OF INSTALLING THE WORK IN THIS SECTION ARE VERIFIED. LATE CLAIMS FOR LABOR AND MATERIALS REQUIRED DUE TO DIFFICULTLY ENCOUNTERED, WHICH COULD HAVE BEEN FORESEEN HAD EXAMINATIONS BEEN MADE, WILL NOT BE RECOGNIZED.
2. H2S REMOVAL FACILITY IS AN ENCLOSED, CLASSIFIED SPACE. ALL ELECTRICAL DEVICES TO BE INSTALLED WITHIN THE CLASSIFIED SPACE SHALL BE RATED CLASS 1 DIV. 1 GROUP D ENVIRONMENT PER NFPA 820. THE CLASSIFIED SPACE INCLUDES THE ENTIRETY OF THE WET WELL AND AN ENVELOPE 18" ABOVE THE WETWELL TOP OF SLAB AND EXTENDS 3' ON EACH SIDE. PROVIDE CONDUIT SEAL OFFS.
3. CONTRACTOR SHALL ENSURE RECEPTACLES ARE NOT MOUNTED WITHIN CLASSIFIED SPACE.

PLAN NOTES

1. CONTRACTOR SHALL PROVIDE AND INSTALL CONDUIT, WIRE, AND HEAT TRACE FOR ALL EXPOSED PIPING. HEAT TRACE TO BE COVERED WITH TWO INCH FIBERGLASS INSULATION AND WRAPPED WITH WEATHERPROOF STAINLESS STEEL JACKET. CONTRACTOR SHALL COORDINATE WITH HEAT TRACE SUPPLIER/MANUFACTURER DURING BIDDING AND CONSTRUCTION AND SHALL PROVIDE ALL CONDUIT, WIRING, AND CIRCUITS REQUIRED. HEAT TRACE SHALL BE PROVIDED/INSTALLED COMPLETE.

For Public Viewing Only-Not For Downloading

COMMONWEALTH ENGINEERS, INC.
A wealth of resources to master a common goal
https://commonwealthengineers.com/
OFFICE LOCATIONS IN:
INDIANAPOLIS, IN (2)
EVANSVILLE, IN
FORT WAYNE, IN
CROWN POINT, IN
BOWLING GREEN, KY
SOUTH BEND, IN

MICHAEL A. MIRAMONTE II
REGISTERED
No. 19800084
STATE OF INDIANA
PROFESSIONAL ENGINEER

Signature 10/03/2025 Date

TOWN OF NEWBURGH
WARRICK COUNTY, INDIANA

WASTEWATER TREATMENT PLANT FLOW EQ BASIN

© 2025 BY COMMONWEALTH ENGINEERS, INC. ALL RIGHTS RESERVED. REPRODUCTION BY ANY METHOD IN WHOLE OR IN PART WITHOUT PERMISSION IS PROHIBITED

Indiana 811 Know what's below. Call before you dig. 1-800-382-5544 (IT'S THE LAW)

No.	Submittal / Revision	By	Date

Designed By:	Drawn By:	Checked By:
RJN	CM	MM
Issue Date:	Project No:	Scale:
06/23/25	S18005-041	AS SHOWN

NEW H2S REMOVAL FACILITY ELECTRICAL PLAN

Drawing No:

E2-0

Sheet: 147 OF 161

Saved: 10/1/2025 5:08:37 PM Current Local File: Autodesk Docs://Newburgh New WWTP EQ and Headworks/NEW HEADWORKS INF STRUCTURE_v23.rvt

SHEET NOTES

1. CONTRACTOR SHALL EXAMINE NOT ONLY PLANS AND SPECIFICATIONS FOR ELECTRICAL INSTRUMENTATION, BUT ALSO PLANS AND SPECIFICATIONS FOR OTHER RELATED SECTIONS. VISIT THE SITE TO BECOME ACQUAINTED WITH ALL PROJECT CONDITIONS INCLUDING EXISTING CONDITIONS. EXECUTION OF CONTRACT IS EVIDENCE THAT THE CONTRACTOR HAS EXAMINED ALL DRAWINGS AND SPECIFICATION AND THAT ALL CONDITIONS OF INSTALLING THE WORK IN THIS SECTION ARE VERIFIED. LATE CLAIMS FOR LABOR AND MATERIALS REQUIRED DUE TO DIFFICULTY ENCOUNTERED, WHICH COULD HAVE BEEN FORESEEN HAD EXAMINATIONS BEEN MADE, WILL NOT BE RECOGNIZED.
2. HEADWORKS FACILITY IS A CLASSIFIED SPACE. ALL ELECTRICAL DEVICES SHALL BE CLASS 1 DIV. 1 RATED INCLUDING BUT NOT LIMITED TO LIGHTS, SWITCHES, CONDUIT, SEALTIGHT, FITTINGS, AND DISCONNECT SWITCHES. ALL HARDWARE SHALL BE STAINLESS STEEL.
3. ELECTRICAL ROOM AND SAMPLER ROOM ARE NON-CLASSIFIED SPACES.

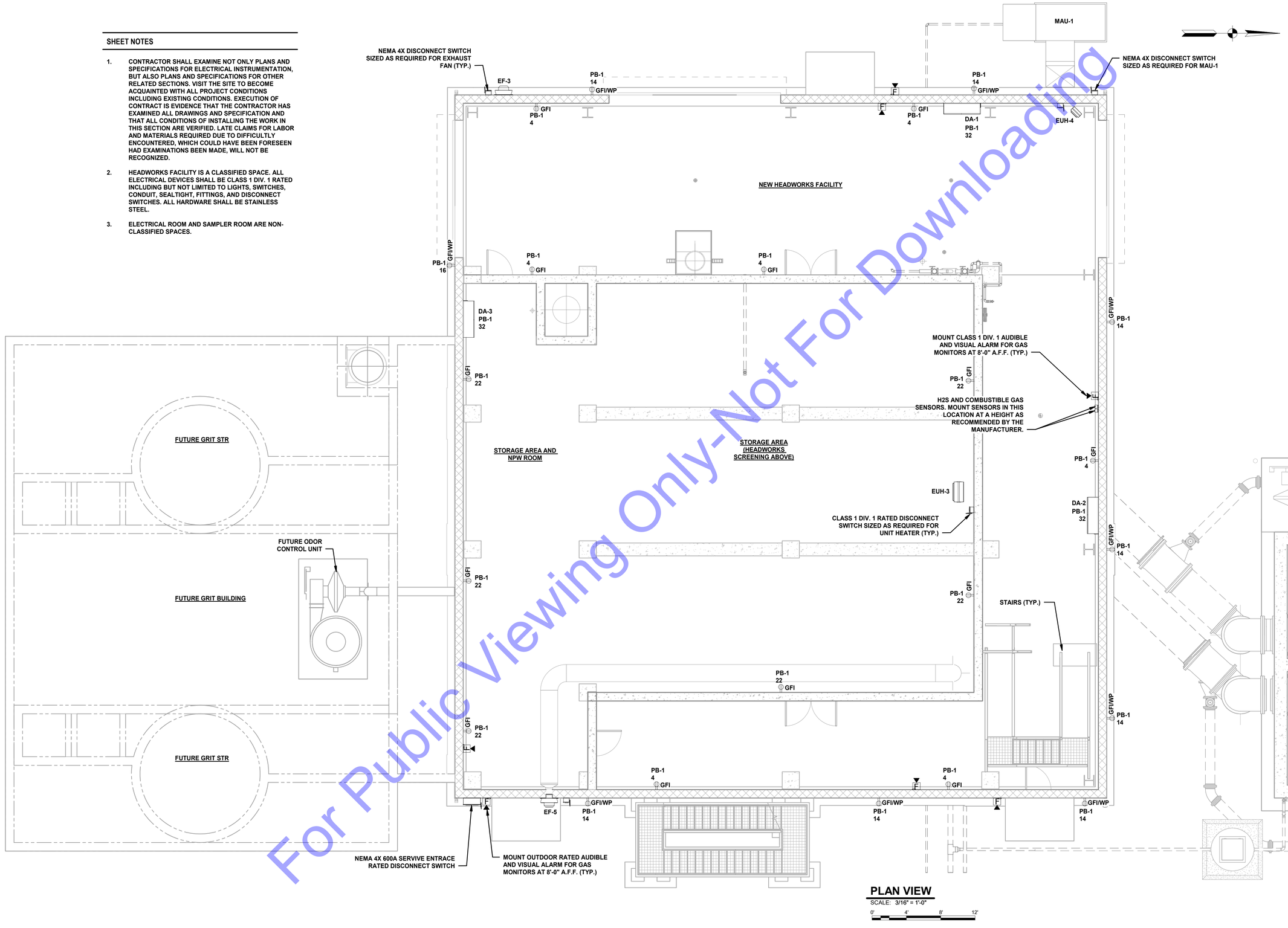

PLAN VIEW
SCALE: 3/16" = 1'-0"
0' 4' 8' 12'

For Public Viewing Only-Not For Downloading

COMMONWEALTH ENGINEERS, INC.
A wealth of resources to master a corporate goal
https://commonwealthengineers.com/
OFFICE LOCATIONS IN:
INDIANAPOLIS, IN (2)
EVANSVILLE, IN
FORT WAYNE, IN
CROWN POINT, IN
BOWLING GREEN, KY
SOUTH BEND, IN

MICHAEL A. MIRANDE, II
REGISTERED
No. 19800084
STATE OF INDIANA
PROFESSIONAL ENGINEER

Signature 10/03/2025 Date

TOWN OF NEWBURGH
WARRICK COUNTY, INDIANA
WASTEWATER TREATMENT PLANT FLOW EQ BASIN

© 2024 BY COMMONWEALTH ENGINEERS, INC. ALL RIGHTS RESERVED. REPRODUCTION BY ANY METHOD IN WHOLE OR IN PART WITHOUT PERMISSION IS PROHIBITED

Indiana 811 Know what's below. 811 before you dig. 1-800-382-5544 (ITS THE LAW)

No.	Submittal / Revision	By	Date

Designed By:	Drawn By:	Checked By:
RJN	CM	MM
Issue Date: 06/23/25	Project No: S18005-41	Scale: AS SHOWN

NEW HEADWORKS LOWER ELECTRICAL PLAN

Drawing No:
E2-1
Sheet: 148 OF 161

Saved: 10/1/2025 5:11:16 PM Current Local File: Autodesk Docs://Newburgh New WWTP EQ and Headworks/Newburgh Headworks V 23.rvt

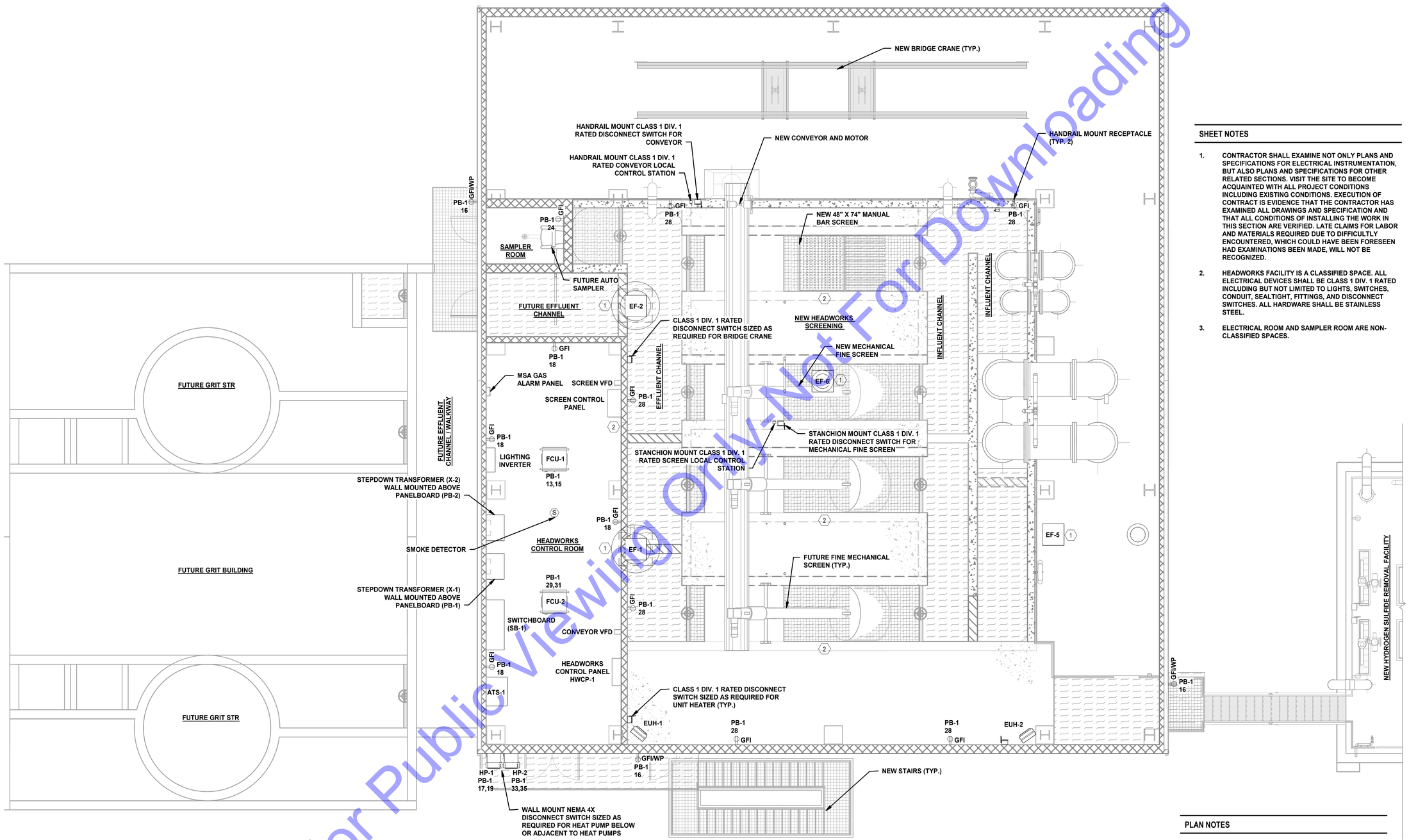

PLAN VIEW

SCALE: 3/16" = 1'-0"

0' 4' 8' 12'

SHEET NOTES

1. CONTRACTOR SHALL EXAMINE NOT ONLY PLANS AND SPECIFICATIONS FOR ELECTRICAL INSTRUMENTATION, BUT ALSO PLANS AND SPECIFICATIONS FOR OTHER RELATED SECTIONS. VISIT THE SITE TO BECOME ACQUAINTED WITH ALL PROJECT CONDITIONS INCLUDING EXISTING CONDITIONS. EXECUTION OF CONTRACT IS EVIDENCE THAT THE CONTRACTOR HAS EXAMINED ALL DRAWINGS AND SPECIFICATION AND THAT ALL CONDITIONS OF INSTALLING THE WORK IN THIS SECTION ARE VERIFIED. LATE CLAIMS FOR LABOR AND MATERIALS REQUIRED DUE TO DIFFICULTLY ENCOUNTERED, WHICH COULD HAVE BEEN FORESEEN HAD EXAMINATIONS BEEN MADE, WILL NOT BE RECOGNIZED.
2. HEADWORKS FACILITY IS A CLASSIFIED SPACE. ALL ELECTRICAL DEVICES SHALL BE CLASS 1 DIV. 1 RATED INCLUDING BUT NOT LIMITED TO LIGHTS, SWITCHES, CONDUIT, SEALTIGHT, FITTINGS, AND DISCONNECT SWITCHES. ALL HARDWARE SHALL BE STAINLESS STEEL.
3. ELECTRICAL ROOM AND SAMPLER ROOM ARE NON-CLASSIFIED SPACES.

PLAN NOTES

1. EF-1, 2, 5, AND 6 LOCATIONS ARE ON THE ROOF OF THE HEADWORKS BUILDING AND ARE ONLY SHOWN IN THIS PLAN VIEW FOR REFERENCE. CONTACTOR TO PROVIDE AND INSTALL NEMA 4X STAINLESS STEEL DISCONNECT AT EXHAUST FANS.
2. CONTRACTOR SHALL PROVIDE AND INSTALL THREE (3) SEPERATE CONDUITS FROM ELECTRICAL ROOM TO EACH FUTURE MECHANICAL SCREEN, SIZED AS REQUIRED PER NEC. ONE (1) CONDUIT FOR POWER, ONE (1) CONDUIT FOR DISCRETE INPUTS, AND ONE (1) CONDUIT FOR ANALOG INPUTS. ALL CONDUITS SHALL CONTAIN A PULL STRING.

For Public Viewing Only-Not For Downloading

COMMONWEALTH ENGINEERS, INC.
A wealth of resources to master a country's goal
https://commonwealthengineers.com/
OFFICE LOCATIONS IN:
INDIANAPOLIS, IN (2)
EVANSVILLE, IN
FORT WAYNE, IN
CROWN POINT, IN
BOWLING GREEN, KY
SOUTH BEND, IN

MICHAEL A. MIRAMONTE II
REGISTERED
No. 19800084
STATE OF INDIANA
PROFESSIONAL ENGINEER

Signature 10/03/2025 Date

TOWN OF NEWBURGH
WARRICK COUNTY, INDIANA

WASTEWATER TREATMENT
PLANT FLOW EQ BASIN

© 2024 BY COMMONWEALTH ENGINEERS, INC. ALL RIGHTS RESERVED. REPRODUCTION BY ANY METHOD IN WHOLE OR IN PART WITHOUT PERMISSION IS PROHIBITED

Indiana 811 Know what's below. Call before you dig. 1-800-382-5544 (ITS THE LAW)

No.	Submittal / Revision	By	Date

Designed By:	Drawn By:	Checked By:
RJN	CM	MM
Issue Date:	Project No:	Scale:
06/23/25	S18005-41	AS SHOWN

NEW HEADWORKS UPPER ELECTRICAL PLAN

Drawing No:

E2-2

Sheet: 149 OF 161

Saved: 10/2/2025 10:13:51 AM Current Local File: Autodesk Docs://Newburgh New WWTP EQ and Headworks/Newburgh Headworks V 23.rvt

SHEET NOTES

1. CONTRACTOR SHALL EXAMINE NOT ONLY PLANS AND SPECIFICATIONS FOR ELECTRICAL INSTRUMENTATION, BUT ALSO PLANS AND SPECIFICATIONS FOR OTHER RELATED SECTIONS. VISIT THE SITE TO BECOME ACQUAINTED WITH ALL PROJECT CONDITIONS INCLUDING EXISTING CONDITIONS. EXECUTION OF CONTRACT IS EVIDENCE THAT THE CONTRACTOR HAS EXAMINED ALL DRAWINGS AND SPECIFICATION AND THAT ALL CONDITIONS OF INSTALLING THE WORK IN THIS SECTION ARE VERIFIED. LATE CLAIMS FOR LABOR AND MATERIALS REQUIRED DUE TO DIFFICULTLY ENCOUNTERED, WHICH COULD HAVE BEEN FORESEEN HAD EXAMINATIONS BEEN MADE, WILL NOT BE RECOGNIZED.
2. HEADWORKS FACILITY IS A CLASSIFIED SPACE. ALL ELECTRICAL DEVICES SHALL BE CLASS 1 DIV. 1 RATED INCLUDING BUT NOT LIMITED TO LIGHTS, SWITCHES, CONDUIT, SEALTIGHT, FITTINGS, AND DISCONNECT SWITCHES. ALL HARDWARE SHALL BE STAINLESS STEEL.
3. ELECTRICAL ROOM AND SAMPLER ROOM ARE NON-CLASSIFIED SPACES.

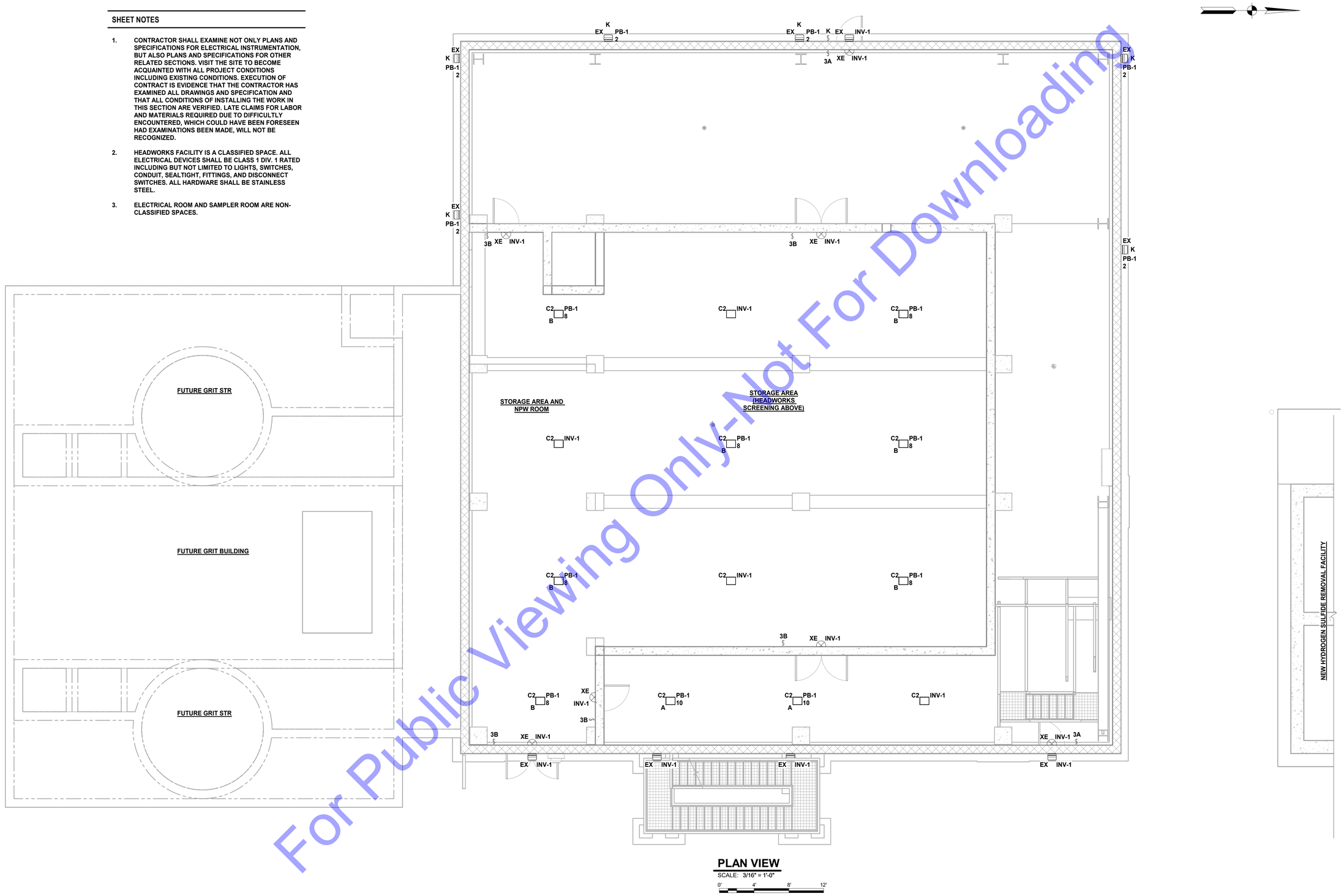

PLAN VIEW
SCALE: 3/16" = 1'-0"
0' 4' 8' 12'

For Public Viewing Only-Not For Downloading

COMMONWEALTH ENGINEERS, INC.
A wealth of resources to master a common goal
https://commonwealthengineers.com/
OFFICE LOCATIONS IN:
INDIANAPOLIS, IN (2)
EVANSVILLE, IN
FORT WAYNE, IN
CROWN POINT, IN
BOWLING GREEN, KY
SOUTH BEND, IN

MICHAEL A. MIRANDE, II
REGISTERED
No. 19800084
STATE OF INDIANA
PROFESSIONAL ENGINEER

Signature 10/03/2025 Date

No.	Submittal / Revision	By	Date

Designed By:	Drawn By:	Checked By:
RJN	CM	MM
Issue Date: 06/23/25	Project No: S18005-41	Scale: AS SHOWN

TOWN OF NEWBURGH
WARRICK COUNTY, INDIANA
WASTEWATER TREATMENT PLANT FLOW EQ BASIN

NEW HEADWORKS LOWER LIGHTING PLAN

Drawing No:
E2-3
Sheet: 150 OF 161

© 2024 BY COMMONWEALTH ENGINEERS, INC. ALL RIGHTS RESERVED. REPRODUCTION BY ANY METHOD IN WHOLE OR IN PART WITHOUT PERMISSION IS PROHIBITED

Indiana 811 Know what's below. 811 before you dig. 1-800-382-5544 (ITS THE LAW)

Saved: 10/1/2025 5:11:20 PM Current Local File: Autodesk Docs://Newburgh New WWTP EQ and Headworks/Newburgh Headworks V 23.rvt

SHEET NOTES

1. CONTRACTOR SHALL EXAMINE NOT ONLY PLANS AND SPECIFICATIONS FOR ELECTRICAL INSTRUMENTATION, BUT ALSO PLANS AND SPECIFICATIONS FOR OTHER RELATED SECTIONS. VISIT THE SITE TO BECOME ACQUAINTED WITH ALL PROJECT CONDITIONS INCLUDING EXISTING CONDITIONS. EXECUTION OF CONTRACT IS EVIDENCE THAT THE CONTRACTOR HAS EXAMINED ALL DRAWINGS AND SPECIFICATION AND THAT ALL CONDITIONS OF INSTALLING THE WORK IN THIS SECTION ARE VERIFIED. LATE CLAIMS FOR LABOR AND MATERIALS REQUIRED DUE TO DIFFICULTLY ENCOUNTERED, WHICH COULD HAVE BEEN FORESEEN HAD EXAMINATIONS BEEN MADE, WILL NOT BE RECOGNIZED.
2. HEADWORKS FACILITY IS A CLASSIFIED SPACE. ALL ELECTRICAL DEVICES SHALL BE CLASS 1 DIV. 1 RATED INCLUDING BUT NOT LIMITED TO LIGHTS, SWITCHES, CONDUIT, SEALTIGHT, FITTINGS, AND DISCONNECT SWITCHES. ALL HARDWARE SHALL BE STAINLESS STEEL.
3. ELECTRICAL ROOM AND SAMPLER ROOM ARE NON-CLASSIFIED SPACES.

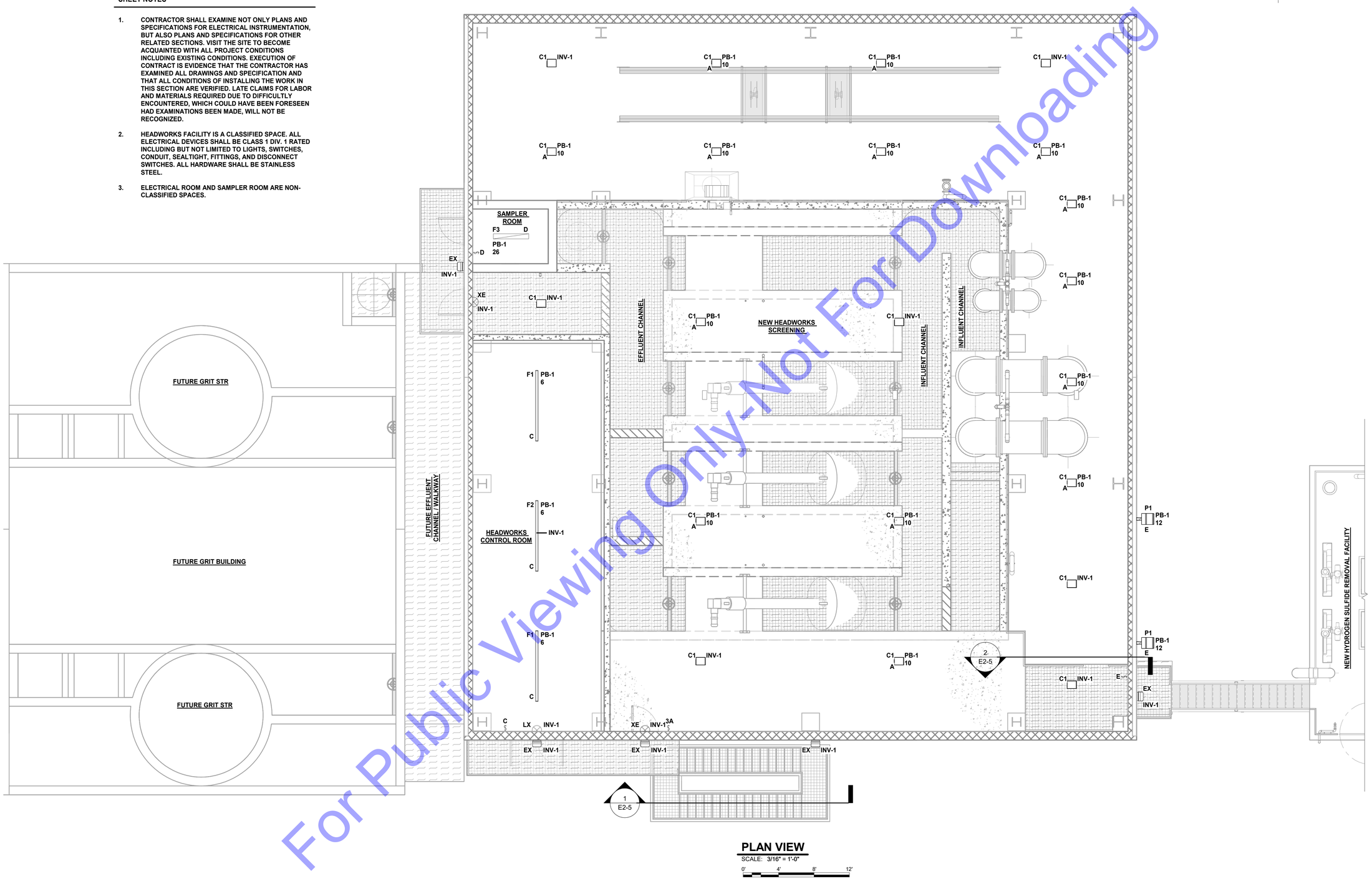

PLAN VIEW
SCALE: 3/16" = 1'-0"
0' 4' 8' 12'

For Public Viewing Only-Not For Downloading

COMMONWEALTH ENGINEERS, INC.
A wealth of resources to master a corporate goal
https://commonwealthengineers.com/
OFFICE LOCATIONS IN:
INDIANAPOLIS, IN (2)
EVANSVILLE, IN
FORT WAYNE, IN
CROWN POINT, IN
BOWLING GREEN, KY
SOUTH BEND, IN

MICHAEL A. MIRAMONTE II
REGISTERED
No. 19800084
STATE OF INDIANA
PROFESSIONAL ENGINEER

Signature 10/03/2025 Date

TOWN OF NEWBURGH
WARRICK COUNTY, INDIANA

WASTEWATER TREATMENT PLANT FLOW EQ BASIN

© 2024 BY COMMONWEALTH ENGINEERS, INC. ALL RIGHTS RESERVED. REPRODUCTION BY ANY METHOD IN WHOLE OR IN PART WITHOUT PERMISSION IS PROHIBITED

Indiana 811 Know what's below. Call before you dig. 1-800-382-5544 (ITS THE LAW)

No.	Submittal / Revision	By	Date

Designed By:	Drawn By:	Checked By:
RJN	CM	MM
Issue Date:	**Project No:**	**Scale:**
06/23/25	S18005-41	AS SHOWN

NEW HEADWORKS UPPER LIGHTING PLAN

Drawing No:
E2-4
Sheet: 151 OF 161

Saved: 10/1/2025 5:11:24 PM Current Local File: Autodesk Docs://Newburgh New WWTP EQ and Headworks/Newburgh Headworks V 23.rvt

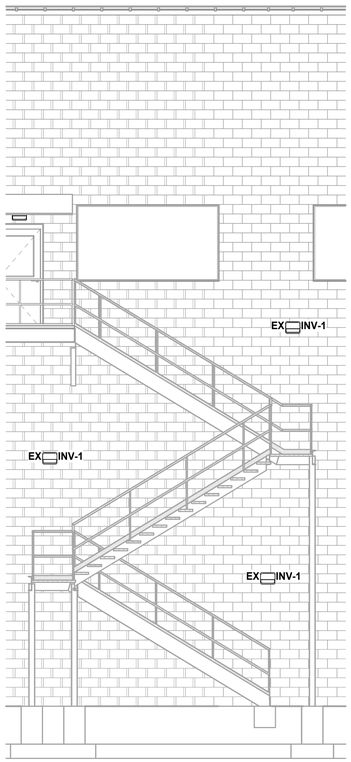

SECTION 1 / E2-4
SCALE: 3/16" = 1'-0"
0' 4' 8' 12'

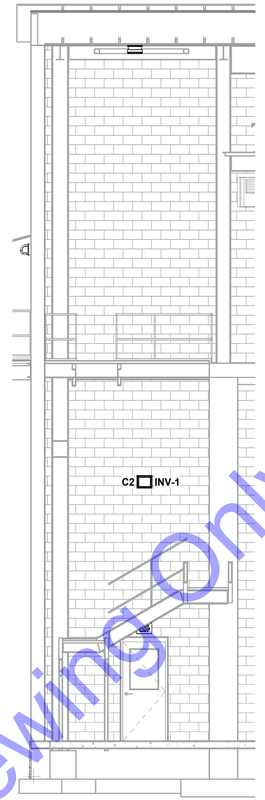

SECTION 2 / E2-4
SCALE: 3/16" = 1'-0"
0' 4' 8' 12'

LIGHTING FIXTURE SCHEDULE

IMAGE	TYPE	MFR	CATALOG NUMBER	LAMPS	VOLT	MOUNTING	NOTES
	C1	RED SKY OR EQUAL	BLK-150-100-277-5K-120-H1-CG-GRY	LED	120-277	SURFACE	CLASS 1 DIVISION 1 RATED LED LIGHT. PROVIDE WET LOCATION FITTINGS AS REQUIRED. PROVIDE MOUNTING BRACKETS AS REQUIRED. LIGHTS THAT ARE WALL MOUNTED, PROVIDE 45 DEGREE ANGLED SURFACE/WALL MOUNTING BRACKETS AS REQUIRED.
	C2	RED SKY OR EQUAL	BLK-80-100-277-5K-120-H1-CG-GRY	LED	120-277	SURFACE	CLASS 1 DIVISION 1 RATED LED LIGHT. PROVIDE WET LOCATION FITTINGS AS REQUIRED. PROVIDE MOUNTING BRACKETS AS REQUIRED. LIGHTS THAT ARE WALL MOUNTED, PROVIDE 45 DEGREE ANGLED SURFACE/WALL MOUNTING BRACKETS AS REQUIRED.
	F1	LITHONIA, CREE, OR EQUAL	CLX L96 14000LM SEF WDL MVOLT 40K 80CRI WH	LED	120-277	SURFACE	PROVIDE WITH REQUIRED MOUNTING BRACKETS OR CHAINS AS REQUIRED FOR INSTALLATION.
	F2	LITHONIA, CREE, OR EQUAL	CLX L96 14000LM SEF WDL MVOLT 40K 80CRI WH E10WLCP	LED	120-277	SURFACE	PROVIDE WITH REQUIRED MOUNTING BRACKETS OR CHAINS AS REQUIRED FOR INSTALLATION. BATTERY BACKED EMERGENCY LIGHT. TWO BALLASTED LIGHT, STANDARD FUNCTION AND EMERGENCY BACKUP.
	F3	LITHONIA, CREE, OR EQUAL	CSVT L48 5000LM MVOLT 40K 80CRI	LED	120-277	SURFACE	PROVIDE WET LOCATION FITTINGS AS REQUIRED. PROVIDE MOUNTING BRACKETS AS REQUIRED.
	EX	SYLVANIA, CREE, OR EQUAL	TWP/L/030/740/C5/UNV/BZ	LED	120-277	SURFACE	WALL MOUNTED OUTDOOR SCONCE WITH TEMPERED GLASS LENS. PROVIDE WITH PHOTOCELL. 2800 LUMENS.
	P1	BEACON OR EQUAL	VP-F-1-132L-75-5K7-4X4	LED	120-277	POLE MOUNTED	MOUNTED TO HANDRAIL ON 2" X 10' RIGID ALUMINUM CONDUIT.
	LX	EMERGI-LITE OR EQUAL	LEDP-1-R	INCLUDED	120-277	UNIVERSAL	LED EXIT SIGN WITH RED LETTERING ON BRUSHED ALUMINUM PANEL. CHEVRONS SHALL BE REQUIRED AS SHOWN ON DRAWINGS.
	XE	TLS (THE LIGHTING SOURCE) OR EQUAL	XPEX-1-R-DT-WP-EM	INCLUDED	120-277	UNIVERSAL	LED CLASS 1 DIV 1 EXIT SIGN WITH RED LETTERING ON A356T6 ALUMINUM WITH BAKED-ON GRAY EPOXY FINISH. PANEL CHEVRONS SHALL BE REQUIRED.

PROVIDE BULBS FOR ALL FIXTURES. PROVIDE 10% SPARE BULBS TO THE OWNER AT THE END OF THE PROJECT.

For Public Viewing Only-Not For Downloading

COMMONWEALTH ENGINEERS, INC.
A wealth of resources to master a complex goal
https://commonwealthengineers.com/
OFFICE LOCATIONS IN:
INDIANAPOLIS, IN (2)
EVANSVILLE, IN
FORT WAYNE, IN
CROWN POINT, IN
BOWLING GREEN, KY
SOUTH BEND, IN

MICHAEL A. MIRAMONTE II
REGISTERED
No. 19800084
STATE OF INDIANA
PROFESSIONAL ENGINEER

Signature 10/03/2025 Date

TOWN OF NEWBURGH
WARRICK COUNTY, INDIANA

WASTEWATER TREATMENT
PLANT FLOW EQ BASIN

© 2024 BY COMMONWEALTH ENGINEERS, INC. ALL RIGHTS RESERVED. COPYRIGHTED WORK BY ANY METHOD IN WHOLE OR IN PART WITHOUT PERMISSION IS PROHIBITED

Indiana 811 Know what's below. Call before you dig. 1-800-382-5544 (ITS THE LAW)

No.	Submittal / Revision	By	Date

Designed By:	Drawn By:	Checked By:
RJN	CM	MM
Issue Date: 09/04/25	Project No: S18005-41	Scale: AS SHOWN

NEW HEADWORKS
STAIRWELL LIGHTING
SECTION VIEWS

Drawing No:
E2-5
Sheet: 152 OF 161

Saved: 10/1/2025 5:11:26 PM Current Local File: Autodesk Docs://Newburgh New WWTP EQ and Headworks/Newburgh Headworks V 23.rvt

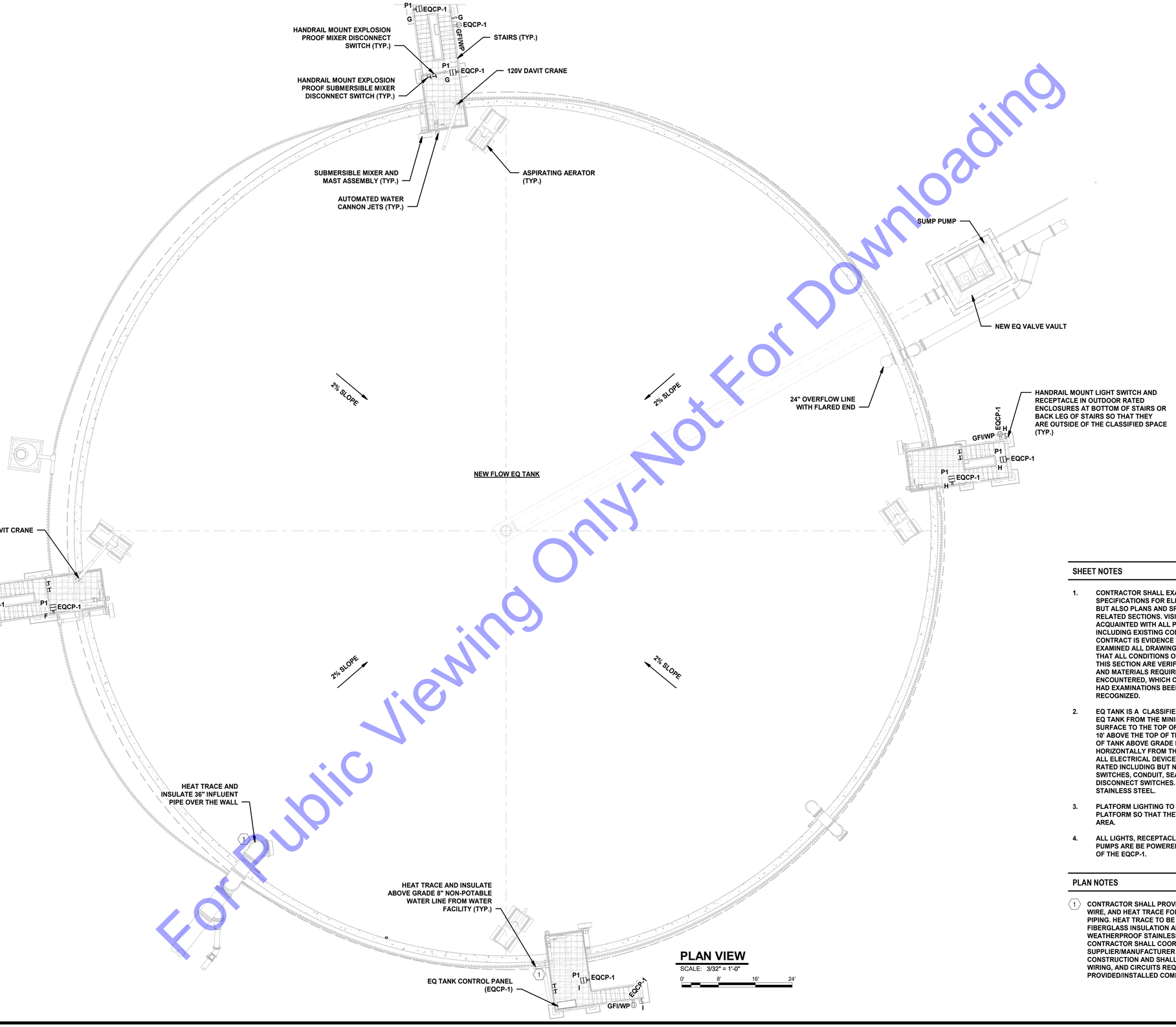

For Public Viewing Only-Not For Downloading

SHEET NOTES

1. CONTRACTOR SHALL EXAMINE NOT ONLY PLANS AND SPECIFICATIONS FOR ELECTRICAL INSTRUMENTATION, BUT ALSO PLANS AND SPECIFICATIONS FOR OTHER RELATED SECTIONS. VISIT THE SITE TO BECOME ACQUAINTED WITH ALL PROJECT CONDITIONS INCLUDING EXISTING CONDITIONS. EXECUTION OF CONTRACT IS EVIDENCE THAT THE CONTRACTOR HAS EXAMINED ALL DRAWINGS AND SPECIFICATION AND THAT ALL CONDITIONS OF INSTALLING THE WORK IN THIS SECTION ARE VERIFIED. LATE CLAIMS FOR LABOR AND MATERIALS REQUIRED DUE TO DIFFICULTLY ENCOUNTERED, WHICH COULD HAVE BEEN FORESEEN HAD EXAMINATIONS BEEN MADE, WILL NOT BE RECOGNIZED.
2. EQ TANK IS A CLASSIFIED SPACE. INTERIOR OF THE EQ TANK FROM THE MINIMUM OPERATING WATER SURFACE TO THE TOP OF THE TANK WALL; ENVELOPE 10' ABOVE THE TOP OF THE EQ TANK; ENVELOPE TOP OF TANK ABOVE GRADE EXTENDING 10'-0" HORIZONTALLY FROM THE INTERIOR EQ TANK WALLS. ALL ELECTRICAL DEVICES SHALL BE CLASS 1 DIV. 2 RATED INCLUDING BUT NOT LIMITED TO LIGHTS, SWITCHES, CONDUIT, SEAL TIGHT, FITTINGS, AND DISCONNECT SWITCHES. ALL HARDWARE SHALL BE STAINLESS STEEL.
3. PLATFORM LIGHTING TO BE MOUNTED 10' ABOVE PLATFORM SO THAT THEY ARE OUT OF THE CLASSFIED AREA.
4. ALL LIGHTS, RECEPTACLES, DAVIT CRANES, AND SUMP PUMPS ARE BE POWERED FROM 120VAC CIRCUITS OUT OF THE EQCP-1.

PLAN NOTES

1. CONTRACTOR SHALL PROVIDE AND INSTALL CONDUIT, WIRE, AND HEAT TRACE FOR ALL EXPOSED WATER PIPING. HEAT TRACE TO BE COVERED WITH TWO INCH FIBERGLASS INSULATION AND WRAPPED WITH WEATHERPROOF STAINLESS STEEL JACKET. THE CONTRACTOR SHALL COORDINATE WITH HEAT TRACE SUPPLIER/MANUFACTURER DURING BIDDING AND CONSTRUCTION AND SHALL PROVIDE ALL CONDUIT, WIRING, AND CIRCUITS REQUIRED. HEAT TRACE SHALL BE PROVIDED/INSTALLED COMPLETE.

COMMONWEALTH ENGINEERS, INC.
A wealth of resources to master a common goal
https://commonwealthengineers.com/
OFFICE LOCATIONS IN:
INDIANAPOLIS, IN (2)
EVANSVILLE, IN
FORT WAYNE, IN
CROWN POINT, IN
BOWLING GREEN, KY
SOUTH BEND, IN

MICHAEL A. MIRANDE, II
REGISTERED
No. 19800084
STATE OF INDIANA
PROFESSIONAL ENGINEER

Signature 10/03/2025 Date

TOWN OF NEWBURGH
WARRICK COUNTY, INDIANA

WASTEWATER TREATMENT PLANT REQUEST FOR FLOW EQUALIZATION TANK AND FOUNDATION

© 2024 BY COMMONWEALTH ENGINEERS, INC. ALL RIGHTS RESERVED. REPRODUCTION BY ANY METHOD IN WHOLE OR IN PART WITHOUT PERMISSION IS PROHIBITED

Indiana 811 Know what's below. Call before you dig. 1-800-382-5544 (ITS THE LAW)

No.	Submittal / Revision	By	Date

Designed By:	Drawn By:	Checked By:
RJN	CM	MM
Issue Date:	Project No:	Scale:
06/26/25	S18005-41	AS SHOWN

NEW FLOW EQ TANK ELECTRICAL PLAN

Drawing No:
E2-6
Sheet: 153 OF 159

Saved: 10/1/2025 5:07:17 PM Current Local File: Autodesk Docs://Newburgh New WWTP EQ and Headworks/Newburgh EQ Tank v.23.rvt

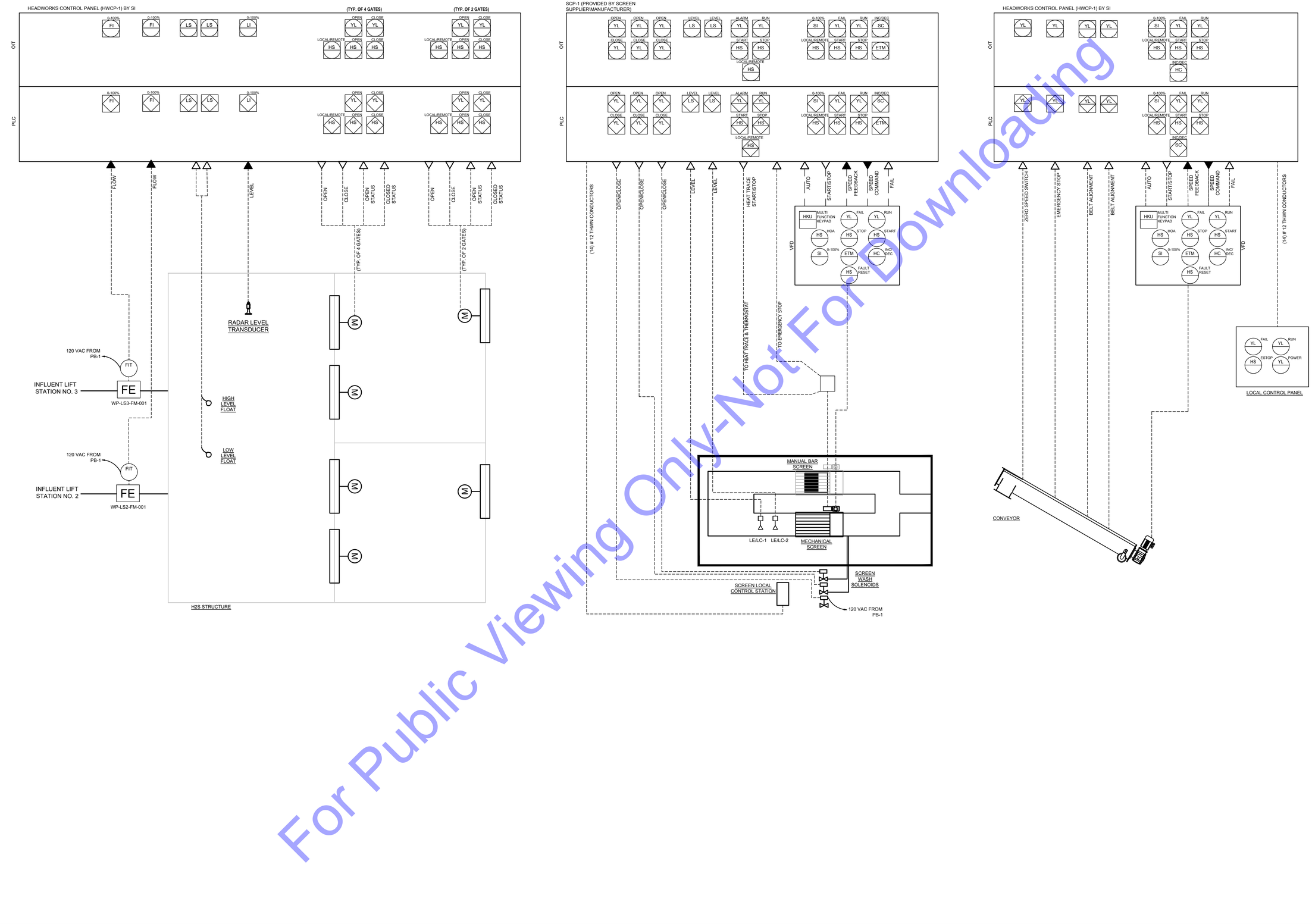

For Public Viewing Only-Not For Downloading

COMMONWEALTH ENGINEERS, INC.
A wealth of resources to master a common goal.
https://commonwealthengineers.com/

MICHAEL A. MIRANDE II
REGISTERED
No. 19800084
STATE OF INDIANA
PROFESSIONAL ENGINEER

Signature 10/03/25 Date

TOWN OF NEWBURGH
WARRICK COUNTY, INDIANA

WASTEWATER TREATMENT PLANT
FLOW EQ BASIN

© 2025 BY COMMONWEALTH ENGINEERS, INC. ALL RIGHTS RESERVED. REPRODUCTION BY ANY METHOD, IN WHOLE OR IN PART WITHOUT PERMISSION IS PROHIBITED

Indiana 811 Know what's below. 811 before you dig. 1-800-382-5544 (ITS THE LAW)

No.	Submittal / Revision	By	Date

Designed By:	Drawn By:	Checked By:
REW	REW	MAM
Issue Date: 10/03/25	Project No: S18005-041	Scale: AS SHOWN

ELECTRICAL PROCESS AND INSTRUMENTATION I

Drawing No: E3-0

Sheet: 154 OF 161

File: Z:\SHARED\IN CLIENTS M-Z\NEWBURGH\S18005 ON CALL SEWER ENG S\VCS\041 WWTP FLOW EQ BASIN\06 CADM MECH-ELECT\NEWBURGH EQ ELECTRICAL.DWG
Saved: 10/2/2025 5:47:44 PM Plotted: 10/2/2025 6:06:39 PM Current User: Regan Wakefield, EI LastSavedBy: rwakefield

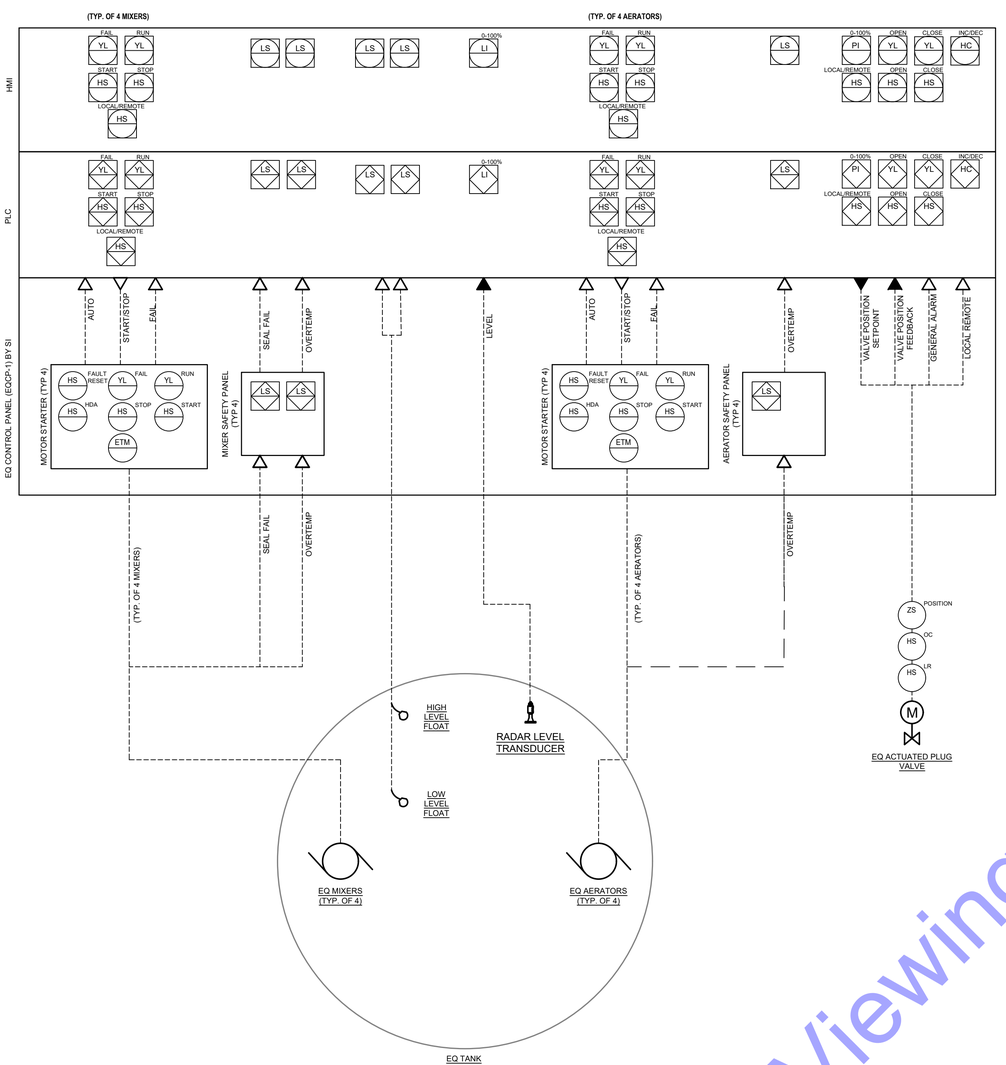

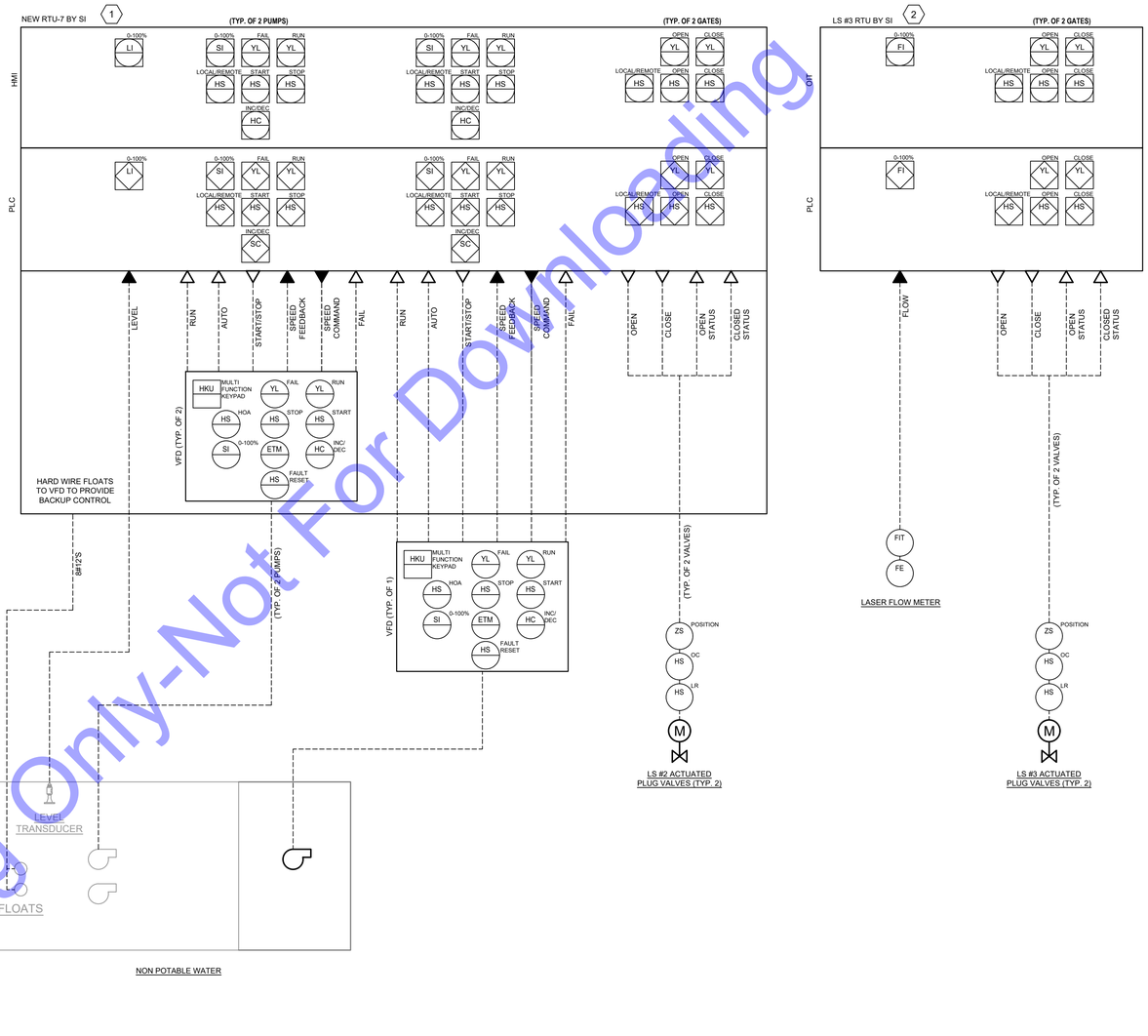

PLAN NOTES:

1. NON POTABLE WATER RTU (RTU 7) IS AN EXISTING CONTROL PANEL TO BE RENOVATED THIS PROJECT. PROCESS AND INSTRUMENTATION DRAWINGS ONLY SHOW NEW EQUIPMENT TO BE CONNECTED. CONTRACTOR IS ALSO RESPONSIBLE FOR CONDUIT AND WIRE FOR RECONNECTION OF ALL EXISTING SIGNALS TO NEW RTU 7 LOCATION. REFER TO RTU 7 AS BUILTS FOR ADDITIONAL DETAILS.

2. LS #3 RTU IS AN EXISTING CONTROL PANEL TO BE RENOVATED IN PLACE THIS PROJECT. PROCESS AND INSTRUMENTATION DRAWINGS ONLY SHOW NEW EQUIPMENT TO BE CONNECTED. ALL EXISTING EQUIPMENT SIGNALS SHALL BE MAINTAINED. CONTRACTOR SHALL PROVIDE CONDUIT AND WIRE AS NECESSARY. COORDINATE WITH SYSTEM INTEGRATOR.

For Public Viewing Only-Not For Downloading

COMMONWEALTH ENGINEERS, INC.
A wealth of resources to master a common goal.
https://commonwealthengineers.com/

MICHAEL A. MIRANDE II
REGISTERED
No. 19800084
STATE OF INDIANA
PROFESSIONAL ENGINEER

Signature 10/03/25 Date

TOWN OF NEWBURGH
WARRICK COUNTY, INDIANA

WASTEWATER TREATMENT PLANT
FLOW EQ BASIN

© 2025 BY COMMONWEALTH ENGINEERS, INC. ALL RIGHTS RESERVED. REPRODUCTION BY ANY METHOD, IN WHOLE OR IN PART WITHOUT PERMISSION IS PROHIBITED

Indiana 811 Know what's below. 811 before you dig. 1-800-382-5544 (IT'S THE LAW)

No.	Submittal / Revision	By	Date

Designed By:	Drawn By:	Checked By:
REW	REW	MAM
Issue Date: 10/03/25	Project No: S18005-041	Scale: AS SHOWN

ELECTRICAL PROCESS AND INSTRUMENTATION II

Drawing No: E3-1

Sheet: 155 OF 161

File: Z:\SHARED\IN CLIENTS M-Z\NEWBURGH\S18005 ON CALL SEWER ENG SVCS\041 WWTP FLOW EQ BASIN\06 CAD\K MECH-ELECT\NEWBURGH EQ ELECTRICAL.DWG
Saved: 10/2/2025 5:47:44 PM Plotted: 10/2/2025 6:06:43 PM Current User: Regan Wakefield, E LastSavedBy: rwakefield

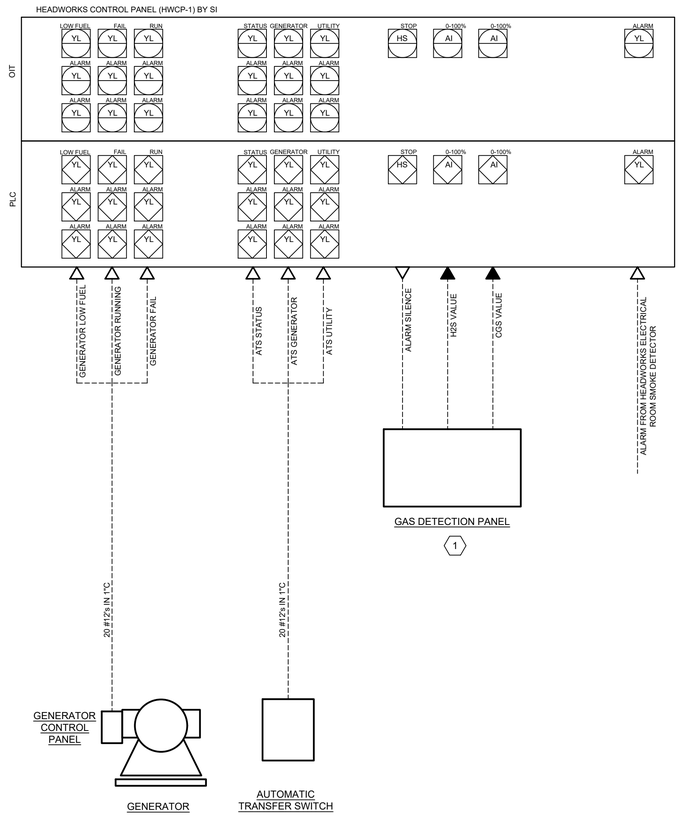

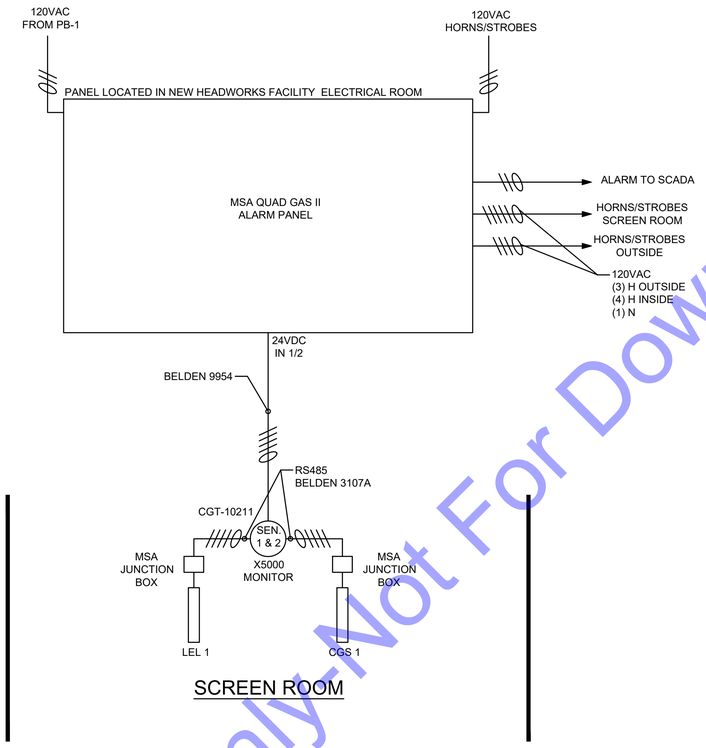

HEADWORKS GAS SENSOR WIRING DIAGRAM

SCALE: NTS

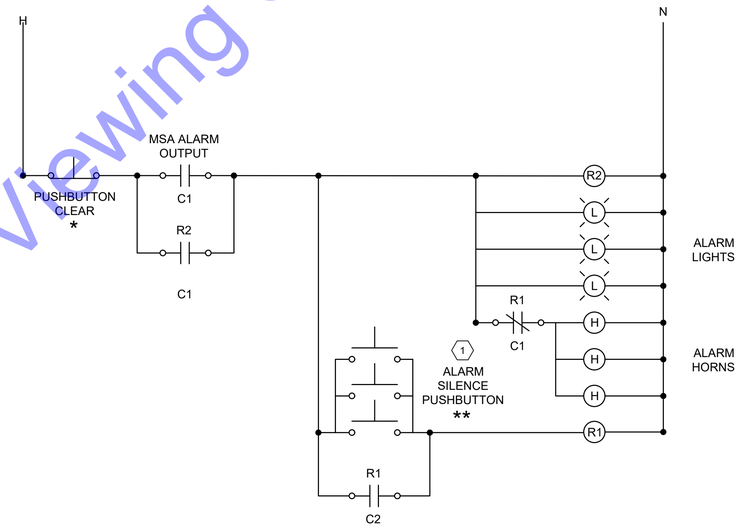

PLAN NOTES:

1 SYSTEM INTEGRATOR SHALL PROVIDE GAS PANEL TO BE MOUNTED IN HEADWORKS BUILDING. SYSTEM INTEGRATOR SHALL PROVIDE FUNCTIONALITY TO ALLOW FOR ALARM HORN TO BE SILENCED REMOTELY VIA SCADA. SYSTEM INTEGRATOR SHALL ALSO OUTPUT GAS SENSOR ANALOG VALUES TO SCADA FOR REMOTE MONITORING. CONTRACTOR SHALL PROVIDE CONDUIT AND WIRE AS REQUIRED FOR CONNECTION.

ELECTRICAL NOTES

1 GAS DETECTOR WIRING DETAILS ARE FOR REFERENCE ONLY. CONTRACTOR SHALL COORDINATE WITH MANUFACTURER DURING BIDDING AND CONSTRUCTION TO FURNISH A COMPLETE AND FULLY FUNCTIONAL SYSTEM.

2. H2S AND LEL COMBINATION GAS DETECTOR SHALL BE MSA A-X50000M01021AAT1, 0-50 PPM H2S AND LEL IR 5% METHANE (OR EQUAL), FURNISHED BY THE SYSTEM INTEGRATOR, INSTALLED BY THE CONTRACTOR. GAS DETECTORS SHALL BE BLUE TOOTH COMPATIBLE.

3. MSA QUAD GAS 11 PANELS SHALL BE FURNISHED BY THE SYSTEM INTEGRATOR, INSTALLED BY THE BY THE CONTRACTOR.

4. ALL POWER,CONTROL,INTERLOCK WIRING AND CONDUIT SHALL BE PROVIDED AND INSTALLED BY THE CONTRACTOR.

5. ALARM HORNS AND STROBES ON THIS DRAWING SHALL BE FURNISHED BY THE SYSTEM INTEGRATOR AND INSTALLED BY THE CONTRACTOR.

GAS ALARM LIGHT/HORN CIRCUITRY (TYP)

SCALE: NTS

* CLEAR PUSHBUTTON SHALL BE MOUNTED ON NEMA 12 ENCLOSURE HOUSING GAS ALARM LIGHT/HORN CIRCUITRY ADJACENT TO MSA CONTROLLER.

** MOUNTED AT MSA QUAD 11 GAS PANEL LOCATIONS.

For Public Viewing Only-Not For Downloading

COMMONWEALTH ENGINEERS, INC.
A wealth of resources to master a common goal.
https://commonwealthengineers.com/

MICHAEL A. MIRANDE II
REGISTERED
No. 19800084
STATE OF INDIANA
PROFESSIONAL ENGINEER
Signature 10/03/25 Date

TOWN OF NEWBURGH
WARRICK COUNTY, INDIANA

WASTEWATER TREATMENT PLANT
FLOW EQ BASIN

© 2025 BY COMMONWEALTH ENGINEERS, INC. ALL RIGHTS RESERVED. REPRODUCTION OR ANY KIND, IN WHOLE OR IN PART WITHOUT PERMISSION IS PROHIBITED

Indiana 811 Know what's below. 811 before you dig. 1-800-382-5544 (ITS THE LAW)

No.	Submittal / Revision	By	Date

Designed By:	Drawn By:	Checked By:
REW	REW	MAM
Issue Date: 10/03/25	Project No: S18005-041	Scale: AS SHOWN

ELECTRICAL PROCESS AND INSTRUMENTATION III

Drawing No: E3-2

Sheet: 156 OF 161

File: Z:\SHARED\IN CLIENTS IM-Z\NEWBURGH\S18005 ON CALL SEWER ENG SVCS\041 WWTP FLOW EQ BASIN\06 CAD\K MECH-ELECT\NEWBURGH EQ ELECTRICAL.DWG
Saved: 10/2/2025 5:47:44 PM Plotted: 10/2/2025 6:06:47 PM Current User: Regan Wakefield, El LastSavedBy: rwakefield

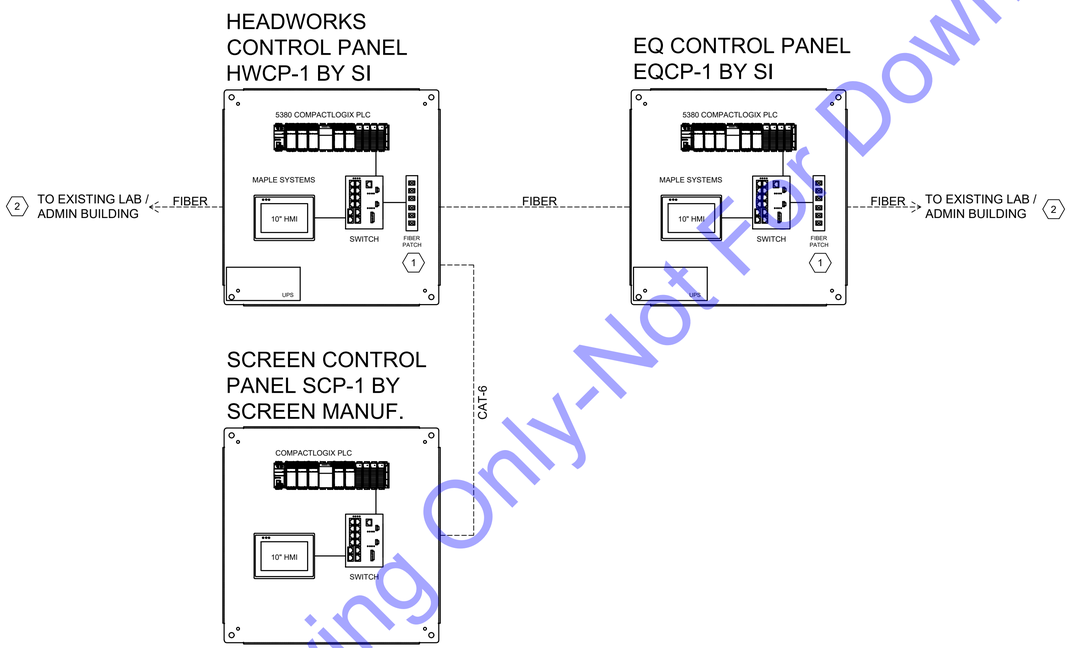

For Public Viewing Only-Not For Downloading

PLAN NOTES:

1. SYSTEM INTEGRATOR SHALL PROVIDE ALL EQUIPMENT NEEDED FOR CONVERSION TO FIBER AND CONNECTION TO FIBER RING WITHIN CONTROL PANEL.
2. CONTRACTOR SHALL PROVIDE NEW FIBER RUN TO EXISTING LAB BUILDING. COORDINATE WITH SYSTEM INTEGRATOR REGARDING EXACT LOCATION TO LAND NEW FIBER.

COMMONWEALTH ENGINEERS, INC.
A wealth of resources to create a common goal.
https://commonwealthengineers.com/

MICHAEL A. MIRANDE II
REGISTERED
No. 19800084
STATE OF INDIANA
PROFESSIONAL ENGINEER

Signature 10/03/25 Date

TOWN OF NEWBURGH
WARRICK COUNTY, INDIANA

WASTEWATER TREATMENT PLANT
FLOW EQ BASIN

© 2025 BY COMMONWEALTH ENGINEERS, INC. ALL RIGHTS RESERVED. REPRODUCTION BY ANY MEANS IN WHOLE OR IN PART WITHOUT PERMISSION IS PROHIBITED

Indiana 811 Know what's below. 811 before you dig. 1-800-382-5544 (ITS THE LAW)

No.	Submittal / Revision	By	Date

Designed By:	Drawn By:	Checked By:
REW	REW	MAM
Issue Date:	Project No:	Scale:
10/03/25	S18005-041	AS SHOWN

NETWORK DIAGRAM

Drawing No: E3-3

Sheet: 157 OF 161

File: Z:\SHARED\IN CLIENTS M-Z\NEWBURGH\S18005 ON CALL SEWER ENG SVCS\041 WWTP FLOW EQ BASIN\06 CADD\ MECH-ELEC\NEWBURGH EQ ELECTRICAL.DWG
Saved: 10/2/2025 5:47:44 PM Plotted: 10/2/2025 6:06:52 PM Current User: Regan Wakefield, El LastSavedBy: rwakefield

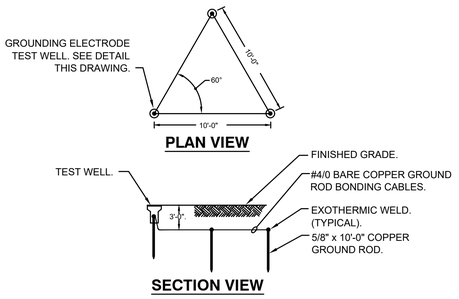

GROUNDING ELECTRODE SYSTEM

NOT TO SCALE

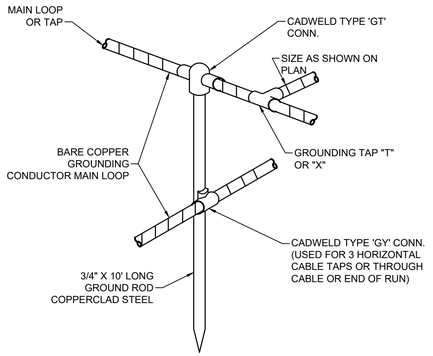

CONDUCTOR TO GROUND ROD CONNECTION DETAIL

NOT TO SCALE

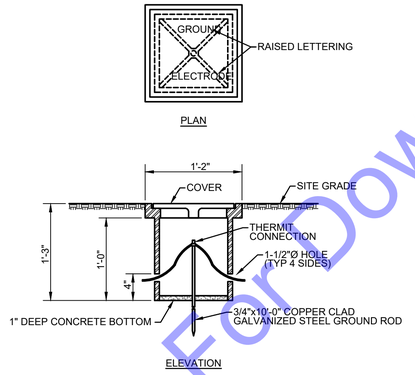

TYPICAL GROUND ROD AND ACCESS BOX DETAIL

NOT TO SCALE

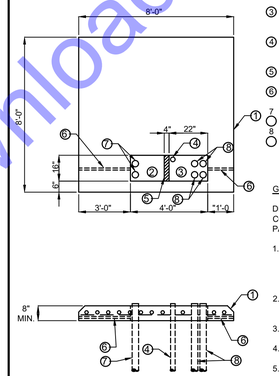

DETAIL NOTES:

1. CONCRETE PAD WITH MINIMUM STRENGTH OF 4000 PSI. CHAMFER ALL EDGES. NO JOINTS ARE ACCEPTABLE IN THE PAD. THE TOP SHALL BE LEVEL AND SMOOTH.
2. SECTION BOXED OUT FOR PRIMARY CONDUITS AND CABLES.
3. SECTION BOXED OUT FOR SECONDARY CABLES. METERING CABLES AND CONDUITS.
4. 2" CONDUIT FOR METER/PHONE CABLES, COORDINATE WITH UTILITY FOR ALL METERING AND METER WIRING REQUIREMENTS.
5. NO CONDUIT PERMITTED IN THE SHADED AREA.
6. 1" PVC CONDUIT FOR GROUND WIRE. GROUND WIRE BY UTILITY.
7. PRIMARY CABLE CONDUIT.
8. SERVICE CABLE CONDUIT, SEE ELECTRICAL SERVICE AND DISTRIBUTION DIAGRAM FOR THE EXACT NUMBER OF CONDUITS.

GENERAL NOTES:

DETAIL IS GENERIC IN NATURE. PROVIDED AS A REFERENCE FOR CONTRACTOR CONVENIENCE. CONTRACTOR TO COORDINATE WITH PAOLI ELECTRIC UTILITY DURING BIDDING AND CONSTRUCTION.

1. THE TRANSFORMER PAD SHALL BE CONCRETE AND A MINIMUM OF EIGHT (8) INCHES THICK. THE TOP SURFACE SHALL BE A MINIMUM OF TWO (2) INCHES ABOVE THE SURROUNDING GRADE. REINFORCING STEEL SHALL BE AT LEAST #4 BARS OR LARGER INSTALLED A MINIMUM OF 12 INCHES ON CENTER BOTH WAYS.
2. THE TRANSFORMER PAD SHALL BE INSTALLED ON A BED OF GRANULAR FILL MATERIAL THAT HAS BEEN COMPACTED PRIOR TO POURING THE CONCRETE.
3. THE SURFACE OF THE TRANSFORMER PAD SHALL BE FLAT, SMOOTH, AND LEVEL WITHIN ONE (1) INCH IN ALL DIRECTIONS.
4. THE EDGE OF THE TRANSFORMER PAD SHALL HAVE A ONE (1) INCH BEVEL FORMED INTO THE TOP EDGE.
5. A ONE (1) INCH I.D. PVC CONDUIT SHALL BE INSTALLED IN THE CONCRETE AS SHOWN IN THE SKETCH FOR THE INSTALLATION GROUNDING CONDUCTORS FOR ADJACENT COMMUNICATIONS EQUIPMENT. GROUNDING CONDUCTORS SHALL BE INSTALLED BY LOCAL UTILITY.
6. ALL WORK SHALL BE IN COMPLIANCE WITH LOCAL ELECTRIC UTILITIES SERVICE GUIDELINES FOR COMMERCIAL/INDUSTRIAL DEVELOPMENTS. VERIFY ALL DETAILS, DIMENSIONS, ROUGH-INS, ETC. WITH LOCAL ELECTRIC UTILITY PRIOR TO POURING.

TRANSFORMER PAD DETAIL (GENERIC)

NOT TO SCALE

Single Eye, Split Mesh, Lace Closing

Single Eye, Split Mesh, Lace Closing*
For permanent support when cable end is not available to be installed through grip.

Cable Diameter Range Inches (cm)	Approx. Breaking Strength Lbs. (N)	E Inches (cm)	M Inches (cm)	Catalog Number
.75"-.99" (1.90-2.51)	2,800 (12,543)	10" (25.40)	25" (63.50)	**02207010**
1.00"-1.24" (2.54-3.15)	4,280 (19,037)	12" (30.48)	28" (71.12)	**02207011**
1.25"-1.49" (3.17-3.78)	4,280 (19,037)	12" (30.48)	30" (76.20)	**02207012**
1.50"-1.99" (3.81-5.05)	4,280 (19,037)	12" (30.48)	34" (86.36)	**02207013**

Note: E-Eye length.
M-Mesh length at nominal diameter.
** Change catalog number from 022 to 024 for stainless steel. Consult factory for availability.*

NOTES:

CABLE SUPPORT SHALL BE STAINLESS STEEL.

CABLE SUPPORT DETAIL

NOT TO SCALE

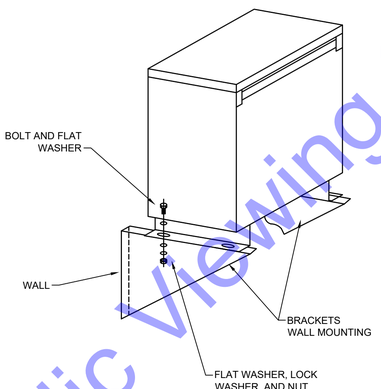

NOTES:

TRANSFORMER TO BE MOUNTED ON WALL USING TRANSFORMER MANUFACTURERS SPECIFICALLY DESIGNED WALL MOUNTING BRACKET SUPPLIED IN KITS AND SPECIFIC TO THE ENCLOSURE. THEY MUST BE INSTALLED FOLLOWING DIRECTIONS INCLUDED IN THE KIT. IT IS IMPORTANT TO CHECK THE WEIGHT OF THE UNIT AND CONFIRM THAT THE WALL AND THE FASTENERS (NOT SUPPLIED WITH THE KIT) CAN SUPPORT THE UNIT. MOUNT AS CLOSE TO CEILING AS MANUFACTURERS REQUIREMENTS ALLOW.

TRANSFORMER MOUNTING DETAIL

NOT TO SCALE

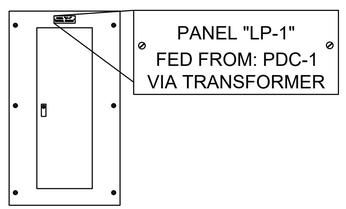

NOTE:
ALL PANELBOARDS INVOLVED IN THIS PROJECT SHALL BE IDENTIFIED BY THE PANEL NAME AND SOURCE OF THE PANEL'S POWER. REFER TO THE SPECIFICATIONS FOR COLORS AND ADDITIONAL REQUIREMENTS.

PANELBOARD IDENTIFICATION

NOT TO SCALE

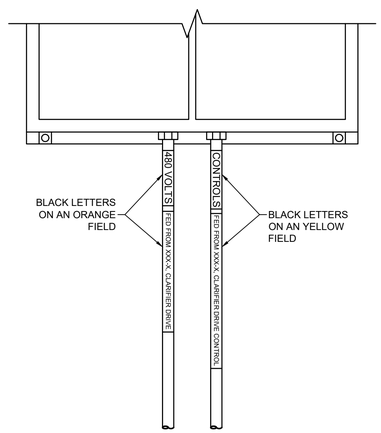

NOTES:

CONDUIT SHALL ALSO BE MARKED INSIDE BOXES.

CONDUIT IDENTIFICATION

NOT TO SCALE

For Public Viewing Only-Not For Downloading

COMMONWEALTH ENGINEERS, INC.
A wealth of resources to master a common goal.
https://commonwealthengineers.com/

MICHAEL A. MIRANDE II
REGISTERED
No. 19800084
STATE OF INDIANA
PROFESSIONAL ENGINEER

Signature 10/03/25 Date

TOWN OF NEWBURGH
WARRICK COUNTY, INDIANA

WASTEWATER TREATMENT PLANT
FLOW EQ BASIN

© 2025 BY COMMONWEALTH ENGINEERS, INC. ALL RIGHTS RESERVED. REPRODUCTION AND USE OF THIS DRAWING OR IN PART WITHOUT PERMISSION IS PROHIBITED

Indiana 811 Know what's below. 811 before you dig. 1-800-382-5544 (ITS THE LAW)

No.	Submittal / Revision	By	Date

Designed By:	Drawn By:	Checked By:
REW	REW	MAM
Issue Date:	Project No:	Scale:
10/03/25	S18005-041	AS SHOWN

ELECTRICAL DETAILS I

Drawing No:
E4-0
Sheet: 158 OF 161

File: Z:\SHARED\IN CLIENTS M-Z\NEWBURGH\S18005 ON CALL SEWER ENG SVCS\041 WWTP FLOW EQ BASIN\06 CADD\ MECH-ELEC\NEWBURGH EQ ELECTRICAL.DWG
Saved: 10/2/2025 5:47:44 PM Plotted: 10/2/2025 5:06:57 PM Current User: Regan Wakefield, El LastSavedBy: rwakefield

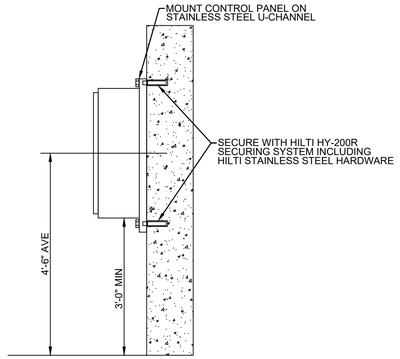

WALL MOUNT CONTROL PANEL INSTALLATION

NOT TO SCALE

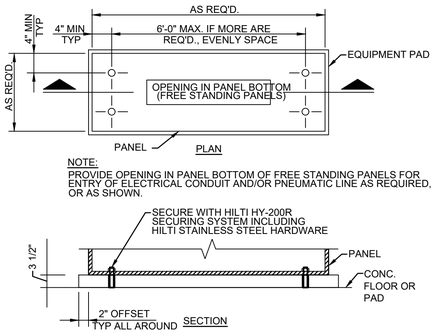

NOTE:
PROVIDE OPENING IN PANEL BOTTOM OF FREE STANDING PANELS FOR ENTRY OF ELECTRICAL CONDUIT AND/OR PNEUMATIC LINE AS REQUIRED, OR AS SHOWN.

FREE STANDING OR FLOOR MOUNT CONTROL PANEL INSTALLATION

NOT TO SCALE

NOTE:
1. ROUND OFF ALL EXPOSED EDGES & CORNERS.
2. PAINT METAL IN CONTACT WITH CONCRETE ACCORDING TO SPECIFICATIONS FOR PAINTING.

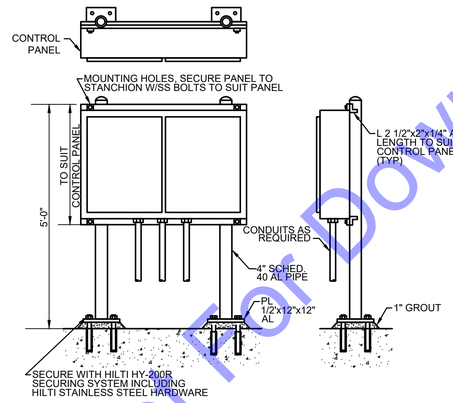

DOUBLE POST STANCHION MOUNT CONTROL PANEL INSTALLATION

NOT TO SCALE

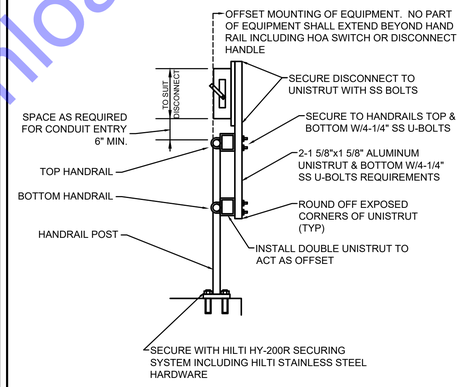

IF HANDRAIL NOT APPLICABLE CONSTRUCT POST OUT OF STAINLESS STEEL UNISTRUT AND SECURE WITH HILTI HY-200R SECURING SYSTEM INCLUDING HILTI STEEL HARDWARE.

HANDRAIL MOUNT DISCONNECT

NOT TO SCALE

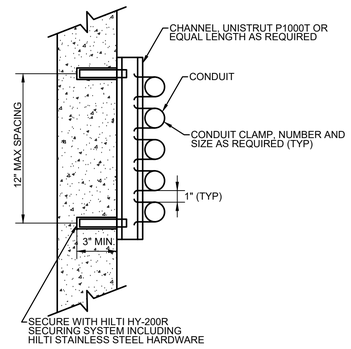

WALL MOUNTED CONDUIT RACK

NOT TO SCALE

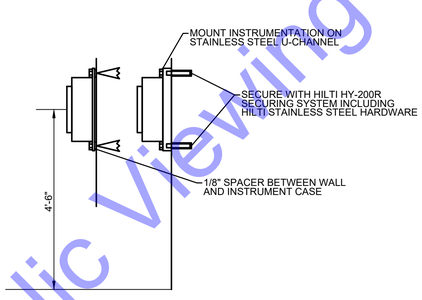

WALL MOUNT SMALL CASE INSTRUMENTATION

NOT TO SCALE

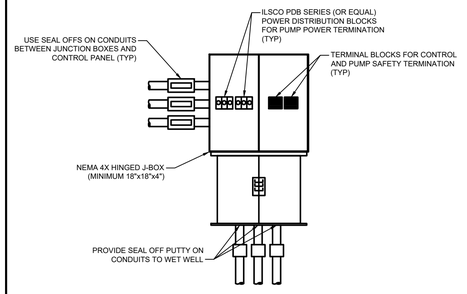

NOTES:

VENTILATED JUNCTION BOXES SHALL BE USED WITH CONTROL PANELS WHERE CONDUIT IS ENTERING A CLASSIFIED SPACE.

J-BOX INTERIOR DETAIL

NOT TO SCALE

For Public Viewing Only-Not For Downloading

COMMONWEALTH ENGINEERS, INC.
A wealth of resources to master a common goal.
https://commonwealthengineers.com/

MICHAEL A. MIRANDE
REGISTERED
No. 19800084
STATE OF INDIANA
PROFESSIONAL ENGINEER
Signature
10/03/25
Date

TOWN OF NEWBURGH
WARRICK COUNTY, INDIANA

WASTEWATER TREATMENT PLANT
FLOW EQ BASIN

© 2025 BY COMMONWEALTH ENGINEERS, INC. ALL RIGHTS RESERVED. REPRODUCTION BY ANY METHOD, IN WHOLE OR IN PART WITHOUT PERMISSION IS PROHIBITED

Indiana 811
Know what's below. 811 before you dig.
1-800-382-5544
(ITS THE LAW)

No.	Submittal / Revision	By	Date

Designed By:	Drawn By:	Checked By:
REW	REW	MAM
Issue Date: 10/03/25	Project No: S18005-041	Scale: AS SHOWN

ELECTRICAL DETAILS II

Drawing No:
E4-1
Sheet: 159 OF 161

File: Z:\SHARED\IN CLIENTS M-Z\NEWBURGH\S18005 ON CALL SEWER ENG SVCS\041 WWTP FLOW EQ BASIN\05 CADM MECH-ELECT\NEWBURGH EQ ELECTRICAL.DWG
Saved: 10/2/2025 5:47:44 PM Plotted: 10/2/2025 6:07:01 PM Current User: Regan Wakefield, El LastSavedBy: rwakefield

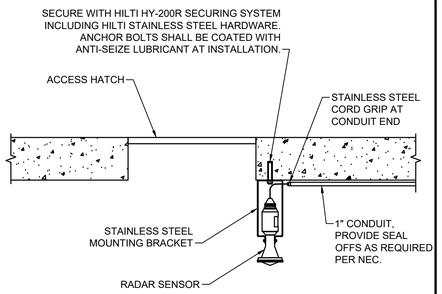

WET WELL RADAR MOUNTING DETAIL

NOT TO SCALE

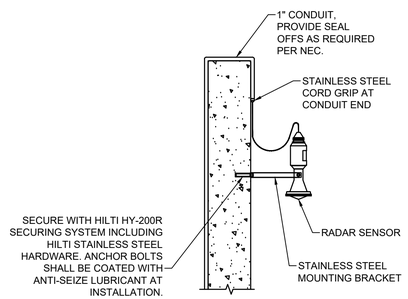

RADAR WALL MOUNTING DETAIL

NOT TO SCALE

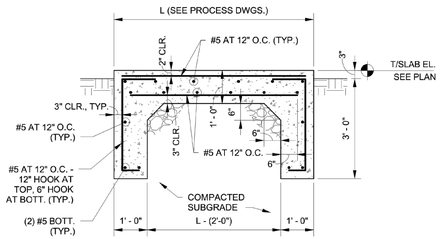

SECTION

NOTES:
1. SEE PROCESS DRAWINGS FOR EQUIPMENT PAD LOCATION, DIMENSIONS AND ELEVATIONS.
2. TOP OF EQUIPMENT PAD SHALL BE FLAT AND LEVEL.
3. COORDINATE EQUIPMENT PADS WITH THE SELECTED MECHANICAL/ELECTRICAL CONTRACTORS.

GENERATOR PAD DETAIL (GENERIC)

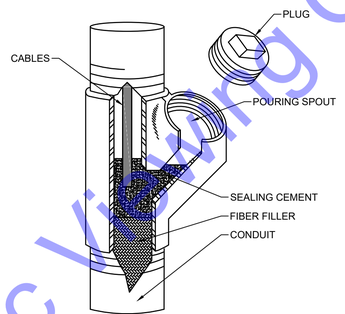

CONDUIT SEAL FITTING

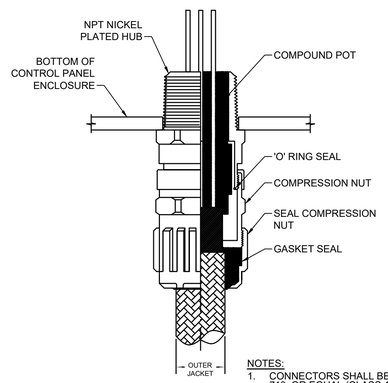

NOTES:
1. CONNECTORS SHALL BE HAWKE 710, OR EQUAL (CLASS 1, DIVISION 2 GROUP D HAZARDOUS LOCATION RATED).
2. PROVIDE SEALING WASHER FOR INGRESS PROTECTION WHERE SPECIFIED.

PUMP POWER AND CONTROL CABLE GLAND CONNECTION

For Public Viewing Only-Not For Downloading

COMMONWEALTH ENGINEERS, INC.
A wealth of resources to master a common goal.
https://commonwealthengineers.com/

MICHAEL A. MIRANDE II
REGISTERED
No. 19800084
STATE OF INDIANA
PROFESSIONAL ENGINEER

Signature 10/03/25 Date

TOWN OF NEWBURGH
WARRICK COUNTY, INDIANA

WASTEWATER TREATMENT PLANT
FLOW EQ BASIN

© 2025 BY COMMONWEALTH ENGINEERS, INC. ALL RIGHTS RESERVED. REPRODUCTION BY ANY MEANS, IN WHOLE OR IN PART WITHOUT PERMISSION IS PROHIBITED

Indiana 811 Know what's below. 811 before you dig. 1-800-382-5544 (ITS THE LAW)

No.	Submittal / Revision	By	Date

Designed By:	Drawn By:	Checked By:
REW	REW	MAM
Issue Date:	Project No:	Scale:
10/03/25	S18005-041	AS SHOWN

ELECTRICAL DETAILS III

Drawing No:
E4-2
Sheet: 160 OF 161

File: Z:\SHARED\IN CLIENTS M-Z\NEWBURGH\S18005 ON CALL SEWER ENG SVCS\041 WWTP FLOW EQ BASIN\06 CADD\K MECH-ELECT\NEWBURGH EQ ELECTRICAL.DWG
Saved: 10/2/2025 5:47:44 PM Plotted: 10/2/2025 5:07:08 PM Current User: Regan Wakefield, El LastSavedBy: rwakefield

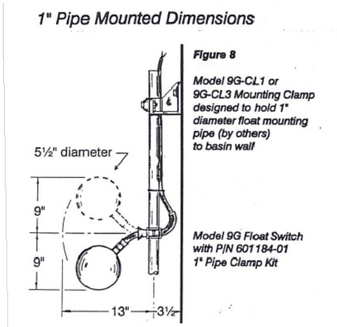

NOTES:

CONTRACTOR SHALL PROVIDE PIPE FOR LENGTH OF FLOAT TO ENSURE FLOAT IS NOT SUCKED INTO AND DAMAGED BY H2S STRUCTURE GATES.

FLOAT MOUNTING DETAIL (H2S)

NOT TO SCALE

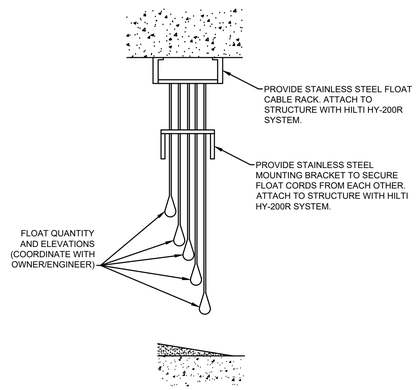

FLOAT MOUNTING DETAIL

NOT TO SCALE

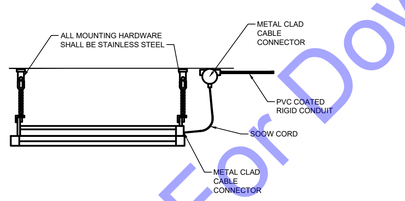

LIGHT FIXTURE MOUNTING DETAIL

NOT TO SCALE

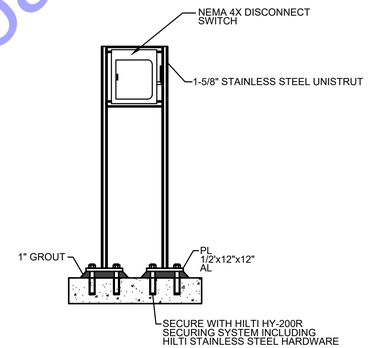

NOTE:
1. ROUND OFF ALL EXPOSED EDGES & CORNERS.
2. PAINT METAL IN CONTACT WITH CONCRETE ACCORDING TO SPECIFICATIONS FOR PAINTING.
3. ALL BOLTS, ANCHORS, AND OTHER HARDWARE SHALL BE STAINLESS STEEL.

STANCHION MOUNT DISCONNECT SWITCH

NOT TO SCALE

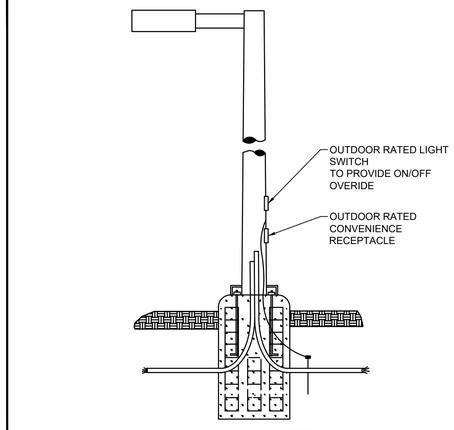

NOTES:
1. CONTRACTOR TO ENSURE OVERRIDE SWITCH AMPERAGE CAPACITY IS ADEQUATE FOR LIGHTS AT POLE.
2. CONTRACTOR TO ENSURE RECEPTACLE IS RATED BASED ON BREAKER SERVING IT.

SITE LIGHTING POLE SWITCH/RECEPTACLE DETAIL

NOT TO SCALE

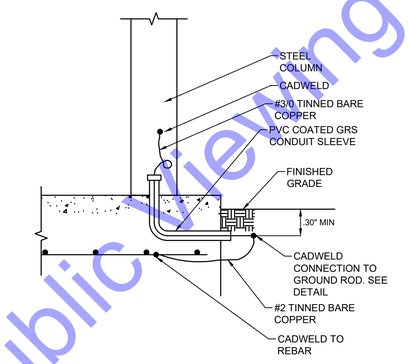

STEEL COLUMN BUILDING AND REBAR GROUND CONNECTION

NOT TO SCALE

POLE BASE SCHEDULE

POLE HEIGHT	MAXIMUM TOTAL EPA	MINIMUM PIER SIZE	DEPTH BELOW GRADE*	VERTICAL REINFORCEMENT	CIRCULAR TIES
15'-0"	0-10	20" DIA.	5'-0"	6-#6	#3 @ 12"
20'-0"	0-10	20" DIA.	6'-0"	6-#6	#3 @ 12"
25'-0"	0-10	20" DIA.	7'-0"	6-#6	#3 @ 12"
30'-0"	0-10	20" DIA.	8'-0"	6-#6	#3 @ 12"
35'-0"	0-10	24" DIA.	8'-0"	8-#6	#3 @ 12"
35'-0"	10-20	24" DIA.	10'-0"	8-#6	#3 @ 12"
40'-0"	0-10	30" DIA.	10'-0"	8-#6	#3 @ 16"
40'-0"	10-20	30" DIA.	12'-0"	8-#6	#3 @ 16"

* INCREASE DIAMETER IF NECESSARY TO MAINTAIN MINIMUM 6" CONCRETE COVER OF ANCHOR BOLTS.

REFER TO GEOTECHNICAL REPORT (IF AVAILABLE) FOR SOIL CONDITIONS THAT MAY AFFECT THE CONSTRUCTION OF POLE FOUNDATIONS. CONTRACTOR SHALL INFORM THE ARCHITECT OR OWNER, PRIOR TO BID DATE, IF DRILLING OF PIERS IS NOT POSSIBLE.

NOTE:
BOND CONDUIT TO POLE WITH #10 GREEN EQUIPMENT GROUNDING CONDUCTOR. USE GROUNDING BUSHING ON CONDUIT AND SCREW TERMINATE WIRE TO POLE. BOND GROUND WIRE DIRECTLY TO POLE FOR PVC CONDUIT.

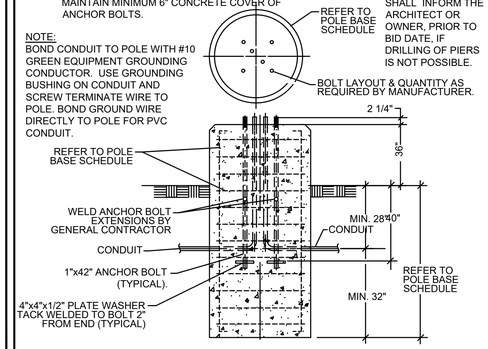

ABOVE SURFACE FOR FIXTURES IN ASPHALT OR GRASS AREAS

ROUND POLE BASE

NOT TO SCALE

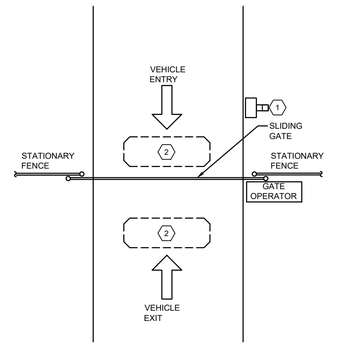

KEYED NOTES:
1. KEYPAD
2. VEHICLE DETECTION LOOP (TYPICAL)

ENTRANCE GATE EQUIPMENT LAYOUT

NOT TO SCALE

For Public Viewing Only-Not For Downloading

COMMONWEALTH ENGINEERS, INC.
A wealth of resources to master a common goal.
https://commonwealthengineers.com/

MICHAEL A. MIRANDE II
REGISTERED
No. 19800084
STATE OF INDIANA
PROFESSIONAL ENGINEER
Signature
10/03/25
Date

TOWN OF NEWBURGH
WARRICK COUNTY, INDIANA

WASTEWATER TREATMENT PLANT
FLOW EQ BASIN

© 2025 BY COMMONWEALTH ENGINEERS, INC. ALL RIGHTS RESERVED. REPRODUCTION OR USE OF THIS DRAWING IN ANY FORM OR IN PART WITHOUT PERMISSION IS PROHIBITED

Indiana811
Know what's below. 811 before you dig.
1-800-382-5544
(ITS THE LAW)

No.	Submittal / Revision	By	Date

Designed By:	Drawn By:	Checked By:
REW	REW	MAM
Issue Date: 10/03/25	Project No: S18005-041	Scale: AS SHOWN

ELECTRICAL DETAILS IV

Drawing No:
E4-3
Sheet: 161 OF 161

File: Z:\SHARED\IN CLIENTS M-Z\NEWBURGH\S18005 QN CALL SEWER ENG SVCS\041 WWTP FLOW EQ BASIN\06 CADD\K MECH-ELEC\TNEWBURGH EQ ELECTRICAL.DWG
Saved: 10/2/2025 5:47:44 PM Plotted: 10/2/2025 6:07:12 PM Current User: Regan Wakefield, EI LastSavedBy: rwakefield